SERVICE BULLETIN

VII.D.1

c644

NO.77

EDITED BY CUSTOMER ENGINEERING DIVISION AUGUST 10, 1977

GENERAL 2200 TELECOMMUNICATIONS INFORMATION

The information contained in this Service Bulletin pertains to the installation, operation, and maintenance of the following WANG model communication controllers:

2227B - Buffered Asynchronous Communication Controller for a 2200 System.

2228 - Bi-synchronous Communications Controller for a 2200 System.

2228B - Bi-synchronous Communications Controller for a 2200 System.

OPTION 62 - Buffered Asynchronous Communications Controller for a PCS I/II.

OPTION 62B - Bi-synchronous Communications Controller for a PCS II.

NOTICE:

This document is the property of Wang Laboratories, Inc. Information contained herein is considered company proprietary information and its use is restricted solely to the purpose of assisting you in servicing Wang products. Reproduction of all or any part of this document is prohibited without the consent of Wang Laboratories.

WANG LABORATORIES, INC.

1 INDUSTRIAL AVENUE, LOWELL, MASSACHUSETTS 01851, TEL. (617) 851-4111, TWX 710 343-6769, TELEX 94-7421

Printed in U.S.A.
13-210A

GENERAL 2200 TELECOMMUNICATIONS INFORMATION

1. INTRODUCTION 5

1.1 GENERAL 5
1.2 PRODUCT HARDWARE 5
1.3 PRODUCT SOFTWARE 6
1.3.1 TERMINAL EMULATORS 6
1.3.2 UTILITY PROGRAMS 6
1.3.2.1 TC SUPPORT UTILITIES 1 6
1.3.2.2 EASYFORM 8
1.4 DOCUMENTATION 8
1.5 MODEL 2228B COMMUNICATIONS CONTROLLER DESCRIPTION 9
1.6 OPTION 62B COMMUNICATIONS CONTROLLER DESCRIPTION 10
1.7 NULL MODEM OPERATION OF A 2228B CONTROLLER 11

2. INSTALLATION 14

2.1 MINIMUM SYSTEM REQUIREMENTS 14
2.2 INSTALLATION OF 2227B, 2228, OR 2228B 15
2.3 INSTALLATION OF OPTION 62 OR OPTION 62B 16
2.4 MODEMS 19

3. OPERATING PROCEDURE FOR TERMINAL EMULATORS 23

3.1 "27B * TTY" 23
3.2 ASYNCH MASTER X.7 25
3.2.1 INTRODUCTION 25
3.2.2 GENERATING A COMMUNICATIONS PROGRAM 26
3.2.3 OPERATING THE TELETYPE/2741 EMULATOR PROGRAM 34
3.3 IBM 2780/3741/3780 EMULATION 45
3.3.1 INTRODUCTION 45
3.3.2 SYSTEM GENERATION OF EMULATOR PROGRAMS 45
3.3.3. LOADING THE EMULATOR PROGRAM 50
3.3.4 ESTABLISHING A CONNECTION 57
3.3.5 SIGNING ON 57
3.3.6 TRANSMITTING A FILE 58
3.3.7 RECEIVING A FILE 60
3.3.8 CONSTRUCTION OF DATA FILES 64

4. DIAGNOSTICS 65

4.1 OFF-LINE DIAGNOSTICS 65
4.1.1 INTRODUCTION 65
4.1.2 2200 PERIPHERAL DIAGNOSTIC DISKETTE 67
4.1.3 PCS/2200 PERIPHERAL DIAGNOSTIC TAPE 83
4.1.4 PCS-II PERIPHERAL DIAGNOSTIC MINIDISKETTE 83

4.2 ON-LINE DIAGNOSTICS 85

4.3 LINE MONITOR TESTER 87
4.3.1 INTRODUCTION 87
4.3.2 DESCRIPTION 87
4.3.3 OPERATION 88
4.3.4 HOW TO TROUBLESHOOT THE SYSTEM USING THE LINE MONITOR 92

4.4 GENERAL SYSTEM TROUBLESHOOTING HINTS 93
4.4.1 INTRODUCTION 93
4.4.2 TROUBLESHOOTING CHECKLIST 93
4.4.3 MODEM CONTROL SIGNALS CHECKOUT 94
4.4.4 MODEM SELF TESTS 96

5. Engineering Change Notices (E.C.N.'s) 97

6. ELECTRONIC SCHEMATICS 101
6548 - NULL MODEM 102
6723 - 2227B/2228 MOTHERBOARD 103
6724 - 2228 DAUGHTER BOARD 104
6730 - 2227B DAUGHTER BOARD 105
7153 - PCS TC BOARD - Sheet 4 106
7153 - PCS TC BOARD - Sheet 5 107
7223 - 2228B MOTHERBOARD 108
7224 - 2228B DAUGHTER BOARD 109

APPENDIX A THE TC FILE FORMAT 111

APPENDIX B OPERATING PROCEDURE FOR SELF-TESTS ON MODEMS 113

1. INTRODUCTION

1.1 GENERAL

The purpose of this service bulletin is to provide our service personnel with the information required to effectively support WANG's ever-increasing telecommunications product line. The Model 2228B and Option 62B are WANG's two newest telecommunications controllers. With today's growing popularity of telephone-linked computer systems, it is vitally important for our service people to be familiar with some aspects of telecommunications. WANG has committed its resources to providing telecommunications capabilities for both the 2200 System and PCS I/II and our service department must be able to service and maintain these systems. It is hoped that the information provided herein will lead to this end. Although all the information pertains to all of WANG's telecommunications controllers, the two newest models, the 2228B and Option 62B, will be stressed.

1.2 PRODUCT HARDWARE

At the present time, WANG provides the following model Telecommunications (TC) Controllers for customer applications:

1. 2227B Buffered Asynchronous Communications Controller (W.L. part # 177-2227B). For use on Point-to-Point ASYNCH line discipline on dial-up, leased, or privately owned communications lines. Typical line speed up to 1200 BPS; up to 9600 BPS on direct connection with Null modem.

2. 2228 Bi-synchronous Communications Controller (W.L. Part # 177-2228). This controller is discontinued and is replaced by Model 2228B.

3. 2228B Bi-synchronous Communications Controller (W.L. part # 177-2228B). For use on Point-to-Point Binary Synchronous Communication (BSC) line discipline on dial-up, leased or privately owned communications lines. For line speeds of 2000, 2400, and 4800 BPS.

   This controller will support ASYNCH line discipline

4. OPTION 62 - For PCS I/II (W.L. part # 177-22EE62); equivalent to the 2227B.

5. Option 62B - For PCS II (W.L. part # 177-22EA62); equivalent to the 2228B.

Also available is the 2227-N Null Modem (W.L. part # 177-2227N). This is double connector module which reverses the input/output pin assignments in the RS-232-C connectors used for the WANG telecommunications controllers. This device is used for direct connection of a WANG terminal to a host computer.

1.3 PRODUCT SOFTWARE

1.3.1 TERMINAL EMULATORS

Terminal emulator programs currently offered by Wang Laboratories and their CPU memory requirements are listed in Table 1.1. These programs emulate the communications protocol of either Teletype, IBM 2741, IBM 2780, IBM 3741, or IBM 3780 terminal. For the operational procedures associated with these programs, refer to Section 3.

1.3.2 UTILITY PROGRAMS

1.3.2.1 TC Support Utilities 1

WANG's TC Support 1 Utilities Package (package # 195-0026-3)contains programs, collectively referred to as the TC Support System (TCS System), designed to perform special functions associated with TC where data and/or program files are to be transmitted from or received to a disk/diskette. The programs available at the present time are:

TABLE 1.1 MEMORY REQUIREMENTS

EMULATORS	PROGRAM NAME	CONTROLLER	EMULATION			DISK* OR CASSETTE	PRINTER	COMMENTS
			SYSGEN	TYPE 1 (on error)	TYPE 2 (srch catlg)			
TELETYPE	"27B*TTY"	2227B 2228B OP-62 OP-62B	-	-	-	-	Yes	This program requires 8K of CPU memory
TELETYPE ASYNCH OR MASTER 2741	"TTYSTART" OR "TTTSTART"	2227B 2228 2228B	16K	8K	16K	Yes	Yes	Both Teletype and 2741 emulators are in this package. Programs will be pre-sysgened on either cassette (OP-62) or mini-floppy diskette (OP-62B)
		OP-62 OP-62B	-	8K	16K	Yes	Yes	
2780	"TCSTART"	2228 2228B	16K	8K	16K	Yes	Yes	Program for OP-62B will be pre-sysgened on mini-floppy diskette
		OP-62B	-	8K	16K	Yes	Yes	
3741	"TCSTART"	2228B	16K	8K	16K	Yes	Yes	Program for OP-62B will be pre-sysgened on mini-floppy diskette
		OP-62B	-	8K	16K	Yes	Yes	
3780	"TCSTART"	2228 2228B	16K	8K	16K	Yes	Yes	Program for OP-62B will be pre-sysgened on mini-floppy diskette
		OP-62B	-	8K	16K	Yes	Yes	

*Disk refers to either hard disk, floppy diskette, or mini-floppy diskette drive.

DATA ENTRY 1: Data Entry 1 program can be used to create a TC formatted disk data file, or to edit, delete, rearrange, create, and list records in an existing TC formatted disk data file.

ATOMIZE: Atomize program converts TC disk data file to program file and atomizes the Basic verbs.

DE-ATOMIZE: De-atomize program converts disk program file to TC formatted disk data file and de-atomizes Basic verbs.

For additional information, please refer to TC SUPPORT UTILITIES 1 USER MANUAL (W.L. part #700-4086).

NOTE:

The TCS System requires a 2200T or equivalent CPU with 16K bytes of memory and a dual disk/diskette drive.

1.3.2.2 EASYFORM

A software utility (package # 195-2037-3) for Data Entry applications and forms-processing requirements. EASYFORM is compatible for either the 16 x 74 or the 24 x 80 CRT displays. Data is recorded to disk in telecommunications format (compatible format for all Wang TC emulators).

1.4 DOCUMENTATION

The list of available documentation is as follows:

1. 2227B Reference Manual - #700-4114
2. Teletype Emulation Utilities User Manual (Asynch Master) - interim version available.
3. 2780 Emulation Utilities User Manual - #700-3757A
4. TC Support Utilities 1 User Manual - #700-4086
5. Easyform User Manual - interim version available.
6. 2227B Data Sheet - #700-3830
7. 2228 Data Sheet - #700-3752A
8. 2228B Data Sheet - #700-4143
9. Option 62B Data Sheet - #700-4145
10. Product Bulletins - # 94 2227 - Null Modem
    #121 2228
    #124 2227B
    #137 2228B/OP-62B
11. Applications Bulletins - #15 2228 IBM 2780 Emulator
    #15A 2228 IBM 3780 Emulator
    IBM 3741 Emulator
    #22 EASYFORM

12. Brochures -

Wang on Distributed Data Processing (Booklet Form) #700-3909
Wang Computer Networks #700-3920

1.5 THE MODEL 2228B COMMUNICATIONS CONTROLLER DESCRIPTION

The Model 2228B Communications Controller provides Wang 2200 Series standalone computer systems with IBM compatible Binary Synchronous Communications (BSC) capability. BSC protocols are designed for efficient transmission of large volumes of data at high speed; data integrity is maximized and communications overhead is minimized.

Like the Model 2228 controller, the Model 2228B controller has its own microprocessor, memory, and sufficient buffer space to perform specific tasks related to data transmission and reception while the CPU is performing tasks related to the I/O peripherals. The controller can be used with any disk or diskette based Wang configuration having one of the following CPU's:

- a System 2200S with Option 24
- a System 2200T
- a System 2200VP.

However, appropriate microcode defining specific tasks to be performed by the controller must be loaded into the microprocessor before data transmission and reception are possible. The required microcode for each communications protocol is produced only by Wang Laboratories and included in the terminal emulation software packages available for use with the controller.

The IBM 2780, 3780 and 3741 emulation packages available for the Model 2228B support transmission at line speeds up to 4800 bits per second over dial-up, point-to-point communications links. Refer to Section 3.3 for operating instructions. Each package contains a SYSGEN (System Generation) program by which any desired combination of the following I/O devices can be selected:

Input	Output
card reader	printer
disk (hard disk or diskette)	disk (hard disk or diskette)
	disk & printer (punch/print emulation)

The keyboard is active for input in addition to the card reader or disk.

With a microprocessor based communications controller such as the Model 2228B, a Wang computer system is highly flexible. As newer communications protocols become popular or a customer's communications requirements change with future business expansion, Wang-generated terminal emulation programs may be developed to meet the new requirements.

Although designed primarily to implement Wang's binary synchronous communications protocols, the Model 2228B controller can handle Wang's asynchronous protocols also. To operate any one of the binary synchronous communications packages such as 2780, 3741, or 3780 Emulation, a suitable synchronous modem is needed. Likewise, to operate an asynchronous communications package such as the Teletype Emulation or the 2741 Emulation, a suitable asynchronous modem is needed. (Refer to Figure 2.1)

Physically, the Model 2228B Communications Controller is designed with a typical mounting bar for installation in one of the I/O slots in a 2200 Series CPU. A 25-pin RS-232-C, CCITT V.24 compatible female connector on the mounting bar and a 12-foot (3.6-meter) Wang-supplied cable, with male connectors on each end, facilitate installation of a modem.

The Model 2228B controller is well-suited for commercial and technical environments where high-speed, reliable, IBM-compatible data communications is a requirement. Commercial users who are considering a distributed data processing network can be offered a small business computer which vastly surpasses the capability of intelligent terminals. Technical users can be offered a very cost-effective multipurpose System 2200 which provides the easy-to-use BASIC language for development of local processing programs and also provides high-performance remote job entry (RJE) batch terminal capabilities for functions such as submitting input to a large host computer system or receiving output from a host system.

1.6 THE OPTION 62B COMMUNICATIONS CONTROLLER DESCRIPTION

The Option 62B Communications Controller allows Wang's new mini-diskette based PCS-II to function as a super-intelligent distributed processing terminal, using one of the highly reliable binary synchronous communications protocols in a Wang-generated turnkey 2780, 3780 or 3741 Emulation Utilities package. Alternatively, an asynchronous package such as Wang's Teletype or 2741 Emulation Utilities package can be used, if desired.

Like the Model 2228B controller, the Option 62B controller has it own microprocessor, memory, and sufficient buffer capacity to perform specific tasks related to data transmission and reception while the PCS-II central processor is performing I/O tasks related to the keyboard, CRT, mini-diskette, and an attached printer. However, appropriate microcode must be loaded into the controller before data transmission and reception are possible. The required microcode for each communications protocol is produced only by Wang Laboratories and included in the terminal emulation software packages available for use with the controller and the mini-diskette based PCS-II.

Although functionally equivalent to the Model 2228B controller, the Option 62B controller differs in physical design. The controller has no mounting bar since it fits entirely within the housing of a PCS-II. Once installed, the controller accesses the 25-pin RS-232-C, CCITT V.24 compatible connector mounted on the back cover of the PCS-II. A 12-foot (3.6 - meter) Wang-supplied cable, with male connectors on each end, facilitates installation of a modem.

The type of modem used with the PCS-II must be suited to the software package and be equivalent to the modem at the remote end of a communications link (refer to Figure 2.1). Generally speaking, all the software packages are available for the Model 2228 and 2228B controllers will be available on the mini-diskette medium associated with the PCS-II.

The PCS-II with Option 62B provides Wang's easy-to-use high level BASIC language with all the statements needed for a commercial, as well as technical, instruction set. Such a unit provides turnkey 2780, 3780 or 3741 IBM-compatible binary synchronous communications capability with important features like multi-record blocking, transparent transmission, and automatic retransmission along with the very reliable block checking procedure.

1.7 NULL MODEM OPERATION OF A 2228B CONTROLLER

In order to use the 2228B controller in the local mode with a Null Modem, the following wiring changes must be performed to the 210-7224 board and the 2227-N Null Modem:

CHANGES TO 2227-N

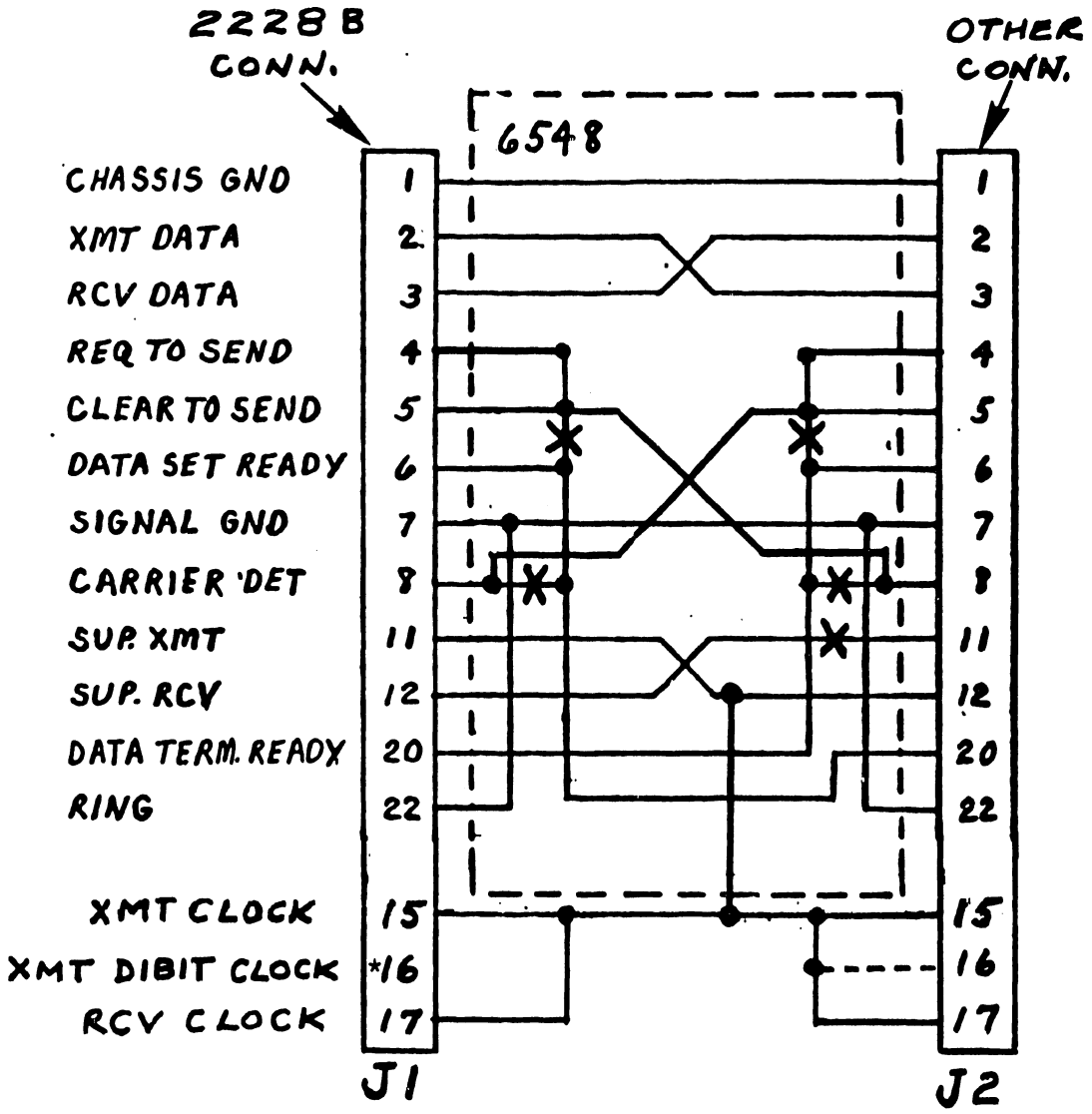

*Non-EIA signal that may be required for operation of certain data terminals such as REDACTRON.

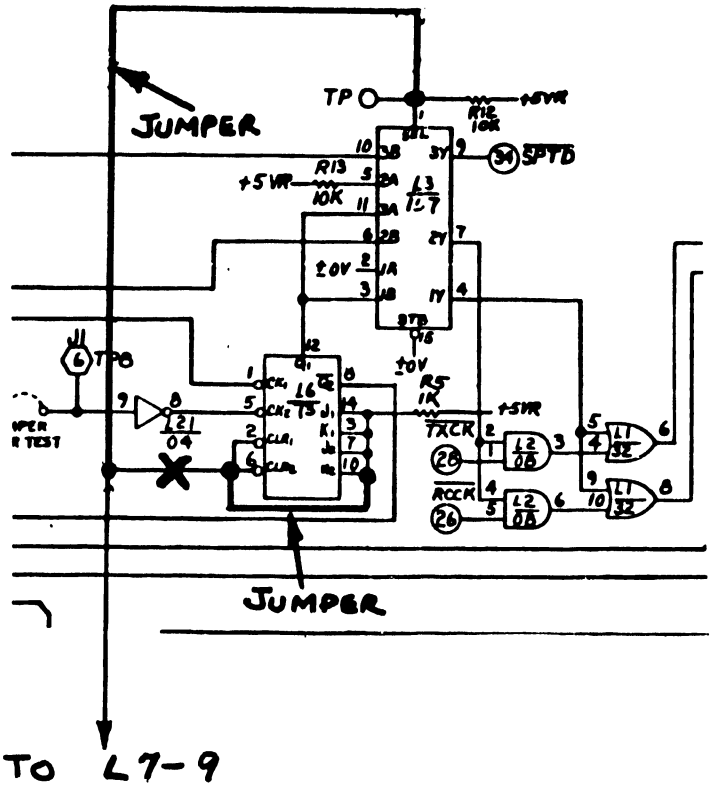

These changes will be incorporated into the 210-7224 board and the 2227-N Null Modem at a future date. The modified 2227-N Null Modem will be named the 2228-N Null Modem.

Along with these hardware changes, a software change in the IBM 2780, 3741, and 3780 Emulators is also required. The R3.3 version of the 2780, 3741, or 3780 Emulators must be used with the null modem operation of a 2228B Controller. When using SYSGEN to generate an emulator program, question G relates to null modem opeation. Question G is:

G TYPE OF MODEM TO BE USED IS

REPLY	DESCRIPTION
1	Synchronous 2000 - 4800
2	2400 BPS Null - Modem
3	4800 BPS Null - Modem
4	Asynchronous 1200 BPS

Reply 1 is given if either a 201A (2000 BPS), 201C (2400 BPS), or a 208 A/B (4800 BPS) modem will be used.

Reply 2 is given if 2400 BPS null modem operation is required.

Reply 3 is given if 4800 BPS null modem operation if required.

Reply 4 is given is a 202C/S (1200 BPS) modem will be used.

2. INSTALLATION

2.1 MINIMUM SYSTEM REQUIREMENTS

The minimum system requirements will vary depending upon the communication controller and the emulator program. See table 1.1 for a list of the CPU memory requirements. Basically, to set up a 2200 system or PCS with telecommunications capability, the following items are needed:

1. 2200 System or PCS I/II
2. Telecommunications Controller
3. Telecommunications Cable (W.L. Part # 220-0113)
4. Modem
5. Emulator Program

To use the model 2227B, 2228, or 2228B controller, the following CPU's or equivalent may be used:

- A System 2200S with Option 24
- A System 2200T
- A System 2200VP

To use the Option 62 Controller, a PCS I or PCS II may be used.

To use the Option 62B Controller, only a PCS II may be used.

A list of compatible Bell modems is in Table 2.1 in the section 2.4. To best determine the system requirements, refer to Section 3 on the operation of the particular emulator to be used.

2.2 INSTALLATION OF 2227B, 2228, OR 2228B

The installation of 2227B, 2228, or 2228B into a 2200S, 2200T or 2200VP CPU chasis is accomplished with the following steps:

1. Before installing the communications controller into the local 2200 CPU, set the device address switches located on the 6723/7223 P.C. Board to Hex IC, as specified on the controller's mounting bracket (set switches 3, 4, 5 ON and all others OFF).

2. Also, before installing the controller, check that the PROM on one of the two controller boards is the most recent revision level. At present, the PROM revision levels are:

2227B	378-2015R5 (located on 6730 PCB)
2228	378-0485R1 (located on 6723 PCB)
2228B	378-2060R2 (located on 7223 PCS)

   If the PROM is not the most recent revision level, order the correct PROM from Customer Engineering stockroom in Tewksbury before installing the unit.

3. Install the communications controller into any CPU I/O slot.

NOTE:

INSTALLING A 2228B CONTROLLER IN A 2200 VP CHASSIS

The 2228B controller is slightly larger than other system 2200 controllers. When installing this controller in a 2200 VP, choose an I/O slot away from the fan. It will be seen that the 2228B does not fit next to the fan; it will almost contact the hub. Simply install this controller in any I/O slot away from the fan.

4. If off-line diagnostics are available, connect the T.C. test connector to the communications controller for off-line checkout. Refer to section 4.1.

5. If off-line diagnostics run successfully, clear the 2200 memory and load the appropriate emulator program in the 2200. See section 3 for emulator program operating instructions.

6. Connect the communications controller to the modem with the TC cable that is provided. Connect the cable from the RS-232-C female connector located on the controller mounting bracket to RS-232-C female connector on the modem (for most BELL modems, this connector will be labeled "CUST. EQUIP.").

7. If desired, run the on-line diagnostic test as described in section 4.2; otherwise, the system is ready for on-line telecommunications link-up with a remote site.

2.3 INSTALLATION OF OPTION 62 OR 62B

The installation of Option 62 or Option 62B in a PCS-I or PCS-II chassis is accomplished with the following steps:

1. Before installing the 7153 board (Option 62) or 7153-1 board (Option 62B) into the local PCS-I/PCS-II unit, perform the following steps:

   a) Set the device address switches to Hex 1C (set switches 4, 5, and 6 ON and all others OFF).

   b) Ensure that the PROM on either the 7153 or 7153-1 board is the most recent revision level. At present, the PROM revision levels are:

Option 62	378-2065 R1
Option 62B	378-2060 R2

   If the PROM is not the latest revision, then order the correct PROM from Customer Engineering stockroom in Tewksbury before installing the unit.

   c) Ensure that the following resistors are loaded in the correct location and are the correct value: (if the 4.7k ohm resistor located between L8 and Q1 isn't loaded, then intermittent memory errors may occur.)

NOTE: Delete any resistor loaded in this location.

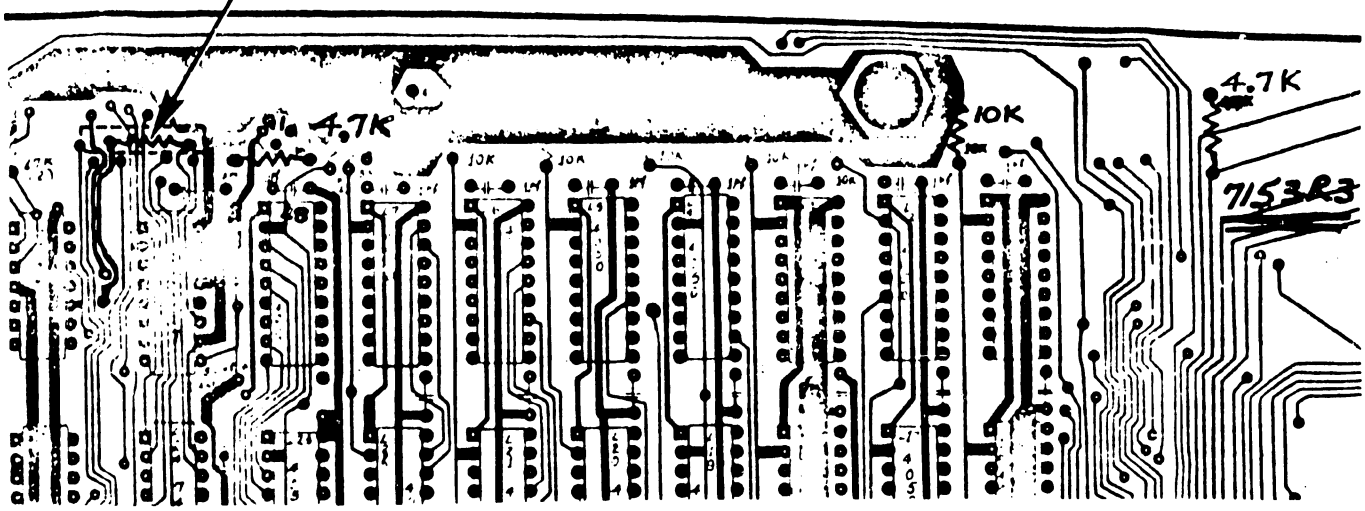

COMPONENT SIDE OF 7153/7153-1

2. Remove the keyboard cover by loosening the two finger nuts and then removing the special function strip. Remove the two screws found under the function strip. Using the function strip finger nuts, lift the key plate up and back until free. Remove the two nylon spacers with brass eyelet grounding rivets.

3. Remove the front cover by first removing the brightness and contrast knobs. Lift up bottom of top cover face plate and pull outwards.

4. For the PCS-II only, remove the minidiskette cover by first removing the screw in rear of cover, and then lift the cover vertically up. Avoid hitting drive(s). Remove the ribbon cable(s) J1 & J3 from the rear of the mini PCB's (on top of drive(s)). Disconnect both power cables (one to each drive) from rear of the mini PCB's.

5. Remove the top cover by first removing the two side screws. Firmly hold the top cover sides and lift upward until cover clears the top of inside components. Lay top cover on its side and disconnect fan cable.

CAUTION:

Before moving the top cover, ensure that the power is off and fan has stopped. If cover is removed while the fan is turning, the fan blades will break.

6. Remove the two long standoff screws extending through the plastic standoffs at the top outside corners of each board.

7. Remove the P.C. boards in the following order:

   a) 7058 (I/O) - first disconnect video cable

   b) 7051 (CPU)

   c) 7052 (MEMORY - RAM/ROM)

8. If the motherboard (7056) is a artwork REV 2 or below, then ECN 5870 must be performed; otherwise, go to Step 15.

9. a) For PCS-I, remove the 7053 board (Cassette Controller).

   b) For PCS-II, remove the 7180 board (Minidiskette Controller).

CAUTION:

When removing either of these boards, be very careful of the CRT yoke.

10. Remove the keyboard by first removing the four screws at the sides of the keyboard plate. Tilt front of keyboard while lifting keyboard out. Disconnect the 24 pin ribbon cable and the OFF/ON switch cable which goes to a nylon polarized connector (3 wire).

11. Remove the chassis by first removing the two side screws and then lifting the unit up and forward being careful not to damage AC power cord and fuse holder.

12. Remove the 7056 (MOTHERBOARD) by first removing the screws located at circuit board amphenol connectors, the RS-232-C connector, and at each side of the motherboard. Remove 7056 motherboard from bottom of chassis assembly.

13. Perform ECN 5870.

ECN 5870. The following wires must be run on 7056 motherboard to initiate the following signals:

ITEM	FROM RS-232-C CONNECTOR	SIGNAL NAME	(4th SLOT FROM REAR) TO SPARE SLOT
1	Pin 11	SCA	6_1
2	Pin 12	SCF	7_1
3	Pin 15	DB	F_1
4	Pin 17	DD	E_1
5	Pin 18	SFG	5_1
6	Pin 19	SCA	D_1

The purpose of the change is so that OP 62/62B will be supplied with the necessary signals.

14. Reassemble as described in steps 9-12 in opposite order of disassembly.

15. Install one rubber grommet in each top/outside hole of the 7153/7153-1 board.

16. Now install the 7153/7153-1 board in the spare slot behind the 7053/7180 board.

17. Replace the remaining P.C. boards in opposite order of Step 7; connect the CRT cable back to the 7058 board.

18. Reassemble as described in steps 2-6 in opposite order of disassembly.

19. If the off-line diagnostics is available, connect the test connector to the RS-232-C connector located on the back panel of the PCS I/PCS II unit for off-line checkout. Refer to Section 4.1.

20. If the off-line diagnostics runs successfully, clear the PCS I/PCS II memory and load the appropriate emulator program. See Section 3 for emulator operating instructions.

21. Connect the PCS I/PCS II to the modem with the TC cable that is provided. Connect the cable from the RS-232-C female connector located on the PCS I/PCS II to the RS-232-C female connector on the modem. (For most Bell modem, this connector will be labeled "CUST. EQUIP.")

22. If desired, run the on-line diagnostic test as described in Section 4.2; otherwise, the system is ready for on-line telecommunications link-up with a remote site.

2.4 MODEMS

The modem, or dataset, used with the system may be rented from the telephone company or purchased from any one of several modem vendors. In either case, the telephone company must connect the modem to the telephone network via telephone company installed data access arrangement (DAA). The DAA consists of a telephone handset and a modem interface rented from the telephone company. Usually a modem or DAA is permanently wired to a wall; therefore, it should be installed as close as possible to the Wang computer system.

NOTE:

Ordering of a modem for a Wang Customer is not the responsibility of a Wang Salesman nor is the installation of a modem the responsibility of a Wang Serviceman. Refer to table 2.2 for a list of the options that must be selected for each modem.

The modems used at both ends of a communications line must be compatible. For example, if a BELL 201C type modem is used at one end, another BELL 201C or equivalent must be used at the other end (not a 201A, 208B, 202C, or 202S). The modems listed in Figure 2.1 or their equivalents may be used.

The controller conforms to the nationally recongized EIA RS-232-C and the internationally recognized CCITT V.24 standards for voltage levels and pin connections (refer to PRODUCT SERVICE TELEPROCESSING GUIDE, page 76). The signal polarity and the voltage of driven and detected signals are as follows:

Logic Level	Applied Voltage	Detected Voltage
0 or ON (Spacing)	+8 vdc	+5 to +15 vdc
1 or OFF (Marking)	-8 vdc	-5 to -15 vdc

The pin assignments are listed in Table 2.1 with both the EIA and the CCITT designations given for the circuit associated with each pin. Also, the signal descriptions and sources are included in the table.

COMPATIBLE BELL MODEMS

Figure 2.1

WANG CONTROLLER	BELL MODEM	SPEED (BAUD)	
2227B/2228/2228B/ OP-62/OP-62B	103A	300	Full-duplex
2227B/2228/2228B/ OP-62/OP-62B	202C	1200	Half-duplex
2227B/2228/2228B/ OP-62/OP-62B	202S	1200	Half-duplex
2227B/2228/2228B/ OP-62/OP-62B	202T	1800	Half-duplex (leased private line full-duplex strapping)
2228/2228B/OP-62B	201A	2000	Half-duplex
2228/2228B/OP-62B	201C	2400	Half-duplex
2228/2228B/OP-62B	208A	4800	Half-duplex (leased private line full-duplex strapping)
2228/2228B/OP-62B	208B	4800	Half-duplex

RS-232-C CONNECTOR PIN ASSIGNMENTS

Table 2.1

PIN	EIA	CCITT	SIGNAL DESCRIPTION	SOURCE
1	AA	101	Protective Ground	
2	BA	103	Transmitted Data	Controller
3	BB	104	Received Data	Modem
4	CA	105	Request to Send	Controller
5	CB	106	Clear to Send	Modem
6	CC	107	Data Set Ready	Modem
7	AB	102	Signal Ground	
8	CF	109	Received Line Signal Detector	Modem
9				
10				
11	SCA	120	Secondary Request to Send	Controller
12	SCF	122	Secondary Rec'd Line Sig. Det.	Modem
13	SCB	121	Secondary Clear to Send	Modem
14	SBA	118	Secondary Transmitted Data	Controller
15	DB	114	Trans. Signal Element Timing	Modem
16	SBB	119	Secondary Received Data	Modem
17	DD	115	Receiver Signal Element Timing	Modem
18		124	Select Frequency Groups	Controller
19	SCA	120	Secondary Request to Send	Controller
20	CD	108.2	Data Terminal Ready	Controller
21	CG	110	Signal Quality Detector	Modem
22	CE	125	Ring Indicator	Modem
23	CH/CI	111/112	Data Signalling Rate Selector	Controller/ Modem
24	DA	113	Trans. Signal Element Timing	Controller
25			Unassigned	

TABLE 2.2 MODEM OPTIONS

Bell Data Set or equivalent	Options
103A	. originate and answer capability
	. receive long space disconnect feature (optional)
	. half or full duplex mode operating capability
202C/202S	. originate and answer capability
	. receive long space disconnect feature (optional)
	. reverse channel (optional)
202T	. all options listed for 202C/202C plus:
	. half or full duplex mode operating capability
201A/201C	. EIA interface
	. transmitter internally timed
	. without alternate voice
	. without new style
	. carrier controlled by Request to Send
	. half or full duplex mode operating capability
208B	. all the options listed for the 201A/201C plus:
	. Data Set Ready ON when AL test button is pressed

3. OPERATING PROCEDURE FOR TERMINAL EMULATORS

3.1 "27B*TTY"

This is one version of WANG's Teletype emulation program for the Model 2227B, 2228B, Option 62, and Option 62B Communications Controllers. This program is available in three versions; a diskette, a mini-diskette, and a cassette version depending on the user's system configuration. For a PCS-I, the cassette version must be used and for a PCS-II, the mini-diskette version must be used.

This program causes a Wang system 2200, PCS I, or PCS II to look like a Teletype to a foreign computer system. This program would typically be used to interface a Wang system to a time-sharing system that supported Teletypes as terminal I/O devices.

The Teletype emulator is designed to interface with a time-share system at 110, 300, or 1200 baud. Interaction at each baud rate is activated by keying a special function key to activate a particular entry point in the program. The user may easily modify the control parameters at a particular entry point to interface with particular time-share system.

REQUIREMENTS: Wang system 2200 with 8K of memory and option 2 (I/O ROM), a PCS I or PCS II. The system requires a Wang system 2227B or Option 62 asynchronous controller board or a 2228B or Option 62B Bi-synchronous controller board. The program uses keyboard/CRT and an optional line printer.

To operate the Teletype, load "27B*TTY" into the 2200 or PCS system being used. For example, if the system is diskette or mini-diskette based, the procedure is as follows:

1) Mount the diskette containing "27B*TTY" in the fixed (310) or removable drive (B10).

2) Key LOAD DC^{F}_{R} "27B*TTY", RETURN (EXEC)

3) Key RUN, RETURN (EXEC)

4) The CRT will display the following:

```
        2227B KEYBOARD/TIME SHARE INTERACTION
S.F.  '1 = EMULATE TELETYPE  110 BAUD
S.F.  '2 = EMULATE TELETYPE  300 BAUD
S.F.  '3 = EMULATE TELETYPE 1200 BAUD
S.F.  '14 = PRINTER ON/OFF LINE FLAG

RECEIVED ERRORS WILL DISPLAY AS FOLLOWS:
PARITY= ↑
OVERRUN=.OVERRUN
FRAMING= ←
STOP:  KEY DESIRED START-UP
: _
```

The operator may now select the desired baud rate for the Teletype emulation program via the active keyboard special function keys.

If S.F.'1 is depressed, the CRT will display:

```
                EMULATE TTY 110 BAUD
 2  STOP BITS--110 BAUD--HALF W/DEL MODE--ENABLE T/R BREAK--
 7  DATA BITS--EVEN PARITY
S.F. KEYS MAY BE USED TO SEND CONTROL CODE EQUIVALENTS
 E.G. '27=HEX(1B)=ESCAPE
      '17=HEX(11)=X-ON
 S.F. '14 PUTS OUTPUT ON/OFF LINE PRINTER
 S.F. '15 IS PROGRAMMED TO SEND A BREAK SIGNAL.


KEYBOARD/T.C. NOW ACTIVE
```

If S.F.'2 is depressed, the CRT will display:

```
                EMULATE TTY 300 BAUD
 1  STOP BITS--300 BAUD--HALF W/DEL MODE--ENABLE T/R BREAK--
 7  DATA BITS--EVEN PARITY
S.F. KEYS MAY BE USED TO SEND CONTROL CODE EQUIVALENTS
 E.G. '27=HEX(1B)=ESCAPE
      '17=HEX(11)=X-ON
 S.F. '14 PUTS OUTPUT ON/OFF LINE PRINTER
 S.F. '15 IS PROGRAMMED TO SEND A BREAK SIGNAL

KEYBOARD/T.C. NOW ACTIVE
```

If S.F.'3 is depressed, the CRT will display:

```
                EMULATE TTY 1200 BAUD
 1  STOP BITS--1200 BAUD--HALF W/DEL MODE--BRK INVERTED BREAK--
 7  DATA BITS--EVEN PARITY
S.F. KEYS MAY BE USED TO SEND CONTROL CODE EQUIVALENTS
 E.G. '27=HEX(1B)=ESCAPE
      '17=HEX(11)=X-ON
 S.F. '14 PUTS OUTPUT ON/OFF LINE PRINTER
 S.F. '15 IS PROGRAMMED TO SEND A BREAK SIGNAL.

KEYBOARD/T.C. NOW ACTIVE
```

The keyboard is now active for character-by-character transmission/reception to/from a remote site using the Teletype communications protocol.

Once a line connection is established and the proper modem baud rate has been selected, the program is acting as a Teletype. The keyboard is always active on send, and the typing of data results in the display of the typed data and the transmission of the data, character by character. For example, if the letter "A" is keyed, the letter "A" is displayed on the CRT and is also transmitted to the remote site.

The S.F. keys may be used for control code equivalents with the exception of S.F.'12-S.F.'15 as they are reserved for special functions.

3.2 ASYNCH MASTER X.7

3.2.1 INTRODUCTION

TELETYPE AND 2741 EMULATION PACKAGE

The Wang Teletype and 2741 emulation utilities package, in conjunction with one of the communications controller boards, allows the Wang 2200 system or PCS to "look like" a Teletype or 2741 terminal. The package is available on diskette, minidiskette, or cassettes. An outstanding feature of the diskette resident package is a SYSGEN (System Generation) program which permits the user, in response to a set of questions appearing on the CRT, to designate the I/O peripherals and other information such as the CRT line length which will be in use during the Teletype or 2741 emulation. Then, the SYSGEN program automatically generates on another diskette (or disk) a communications program having the following modules:

- A parameter inquiry module called TTYPARAM (Teletype emulation) or TTTPARAM (2741 emulation).
- An initialization/loader module called TTYSTART (Teletype emulation) or TTTSTART (2741 emulation).
- A microcode data module for 2228 controller loading.
- A CPU/controller interface module related to the specific I/O configuration.
- A module holding the desire/default parameters, and
- A module containing the parameter setting display.

The generated Teletype program includes such features as selectable host computer protocol parameters, i.e., baud rate, echoing by host (yes/no), parity type, etc. The program also contains special function key control over storage transmission/reception of data; activating/deactivating the printer on reception of data, and Teletype control key/break key/escape key simulation.

The generated 2741 program includes similar applicable features.

*Note: The X.7 version will not operate on a 2200VP System.

With SYSGEN residing on a master diskette, no progr ning effort is required when a facility upgrades or wishes to change the designated I/O peripherals for a communications application. By running SYSGEN again, another program can be generated for a new I/O configuration.

Readers of this service bulletin should keep in mind that the SYSGEN feature is not available when a cassette or mini-diskette resident Teletype or 2741 emulator package is ordered from Wang Laboratories since SYSGEN is not suited to the sequential access methods of cassette storage and the mini-diskette does not contain enough sectors for SYSGEN. However, Wang's cassette or mini-diskette resident Teletype or 2741 emulator package provides all of the options a cassette-based or mini-diskette Teletype emulator requires, i.e., keyboard/CRT interaction, printer optionally active on receive, all of the special function control keys active in the Teletype emulation, and the ability to optionally send stored data from cassette/mini-diskette or to store receive data on cassette/mini-diskette. Wang's cassette/mini-diskette resident 2741 emulator package also provides all the options needed to run a cassette/mini-diskette-based 2741 emulator.

3.2.2 GENERATING A COMMUNICATIONS PROGRAM

DISKETTE/MINI-DISKETTE/CASSETTE RESIDENT UTILITIES

Wang's Teletype/2741 emulation utilities package for the model 2227B, 2228, 2228B, Option 62, and Option 62B is available in three versions, a disk version, a cassette version, and a mini-diskette version.

The diskette resident Teletype/2741 emulator package provides the capability to generate many turnkey communications programs, each of which is suited to a particular choice of I/O devices for data transmission/reception.

The cassette and mini-diskette resident Teletype/2741 emulator package provides a turnkey Teletype/2741 emulator program for the following I/O combination:

- Optional cassette or mini-diskette storage send/ receive (optional printer receive is always available) for a 64-character display.

The configuration listed above is a subset of the turnkey program which can be generated using the SYSGEN program available in a diskette resident Teletype/2741 emulation package. The only difference is that the above configuration must be loaded from cassette address 10A or mini-diskette address 310. Generating the above combination from SYSGEN would allow loading from either cassette address 10A, 10B, or 10C or mini-diskette address 310 or B10.

NOTE:

Anyone using a cassette/mini-diskette resident Teletype/2741 emulation package can skip to Section 3.2.3 since the cassette/mini-diskette package does not contain the SYSGEN program discussed in the remainder of Section 3.2.2.

SYSGEN: WHAT, WHY, AND WHEN TO USE

WHAT IS SYSGEN?

SYSGEN, an abbreviation of the words "System Generation," is a convenient name given to a program designed to interrogate the user's preferences with respect to a set of options and then automatically construct a communications program fulfilling the specifications.

The SYSGEN program, together with a set of I/O modules and other files, resides on the master diskette in the disk version of the Teletype/2741 emulation utilities package.

WHY IS SYSGEN PROVIDED?

SYSGEN is Wang Laboratories' answer to an ambitious objective - maximizing the communications capabilities of a disk-based Wang system while minimizing the complexity of a set of turnkey programs for a variety of communications applications.

Keep in mind that a particular facility may wish to transmit data currently stored on disk and receive data from immediate output to disk. A disk send/disk receive combination of peripherals may be the only I/O configuration to be used when communicating with a host. On the other hand, another facility (or the same with a different application) may wish to transmit and receive with the cassette tape. In this case, a cassette send/receive would be the answer.

Tailoring a communications program through SYSGEN to specific I/O peripherals not only reduces memory requirements but also reduces the operational complexity of the resulting program. Operational simplicity is an important goal since many people, including non-programming and programming personnel, may be involved in data transmission and reception at some facilities.

WHEN SHOULD SYSGEN BE USED

The SYSGEN program should be used initially to generate a communications program which is suited to a desired I/O configuration, along with other options. Thereafter, SYSGEN should only be run when the need arises for another communications program representing different options.

SYSGEN OPTIONS

The SYSGEN options are summarized for convenience in a checklist which appears in Table 3.1. Each question is discussed individually as follows:

QUESTION A --- Give the number corresponding to the address of the drive on which the master diskette is currently mounted.

QUESTION B --- Give the number corresponding to the address of the drive on which the SYSGEN emulator is to be stored.

QUESTION C --- Give the number corresponding to the type of emulator to be used, either Teletype or IBM 2741.

QUESTION D --- Enter the code set to be used for the IBM 2741 emulation.

NOTE:

This question is omitted if the answer to question C is 1.

QUESTION E --- If ultimately to be cassette loaded, answer 2; otherwise, answer 1.

QUESTION F --- Enter the ultimate loading address of the generated Teletype/2741 package.

NOTE:

This question is omitted if the answer to question E is 2.

QUESTION G --- Enter the ultimate loading address of the generated Teletype/2741 package.

NOTE:

This question is omitted if the answer to question E is 1.

QUESTION H --- The answer specifies the type of input storage device from which data may be transmitted.

QUESTION I --- The answer specifies the type of output storage device to which data may be received.

QUESTION J --- The answer determines which disk file opening and closing method will be used.

Method 1 -- uses the statement ON ERROR to capture and flag errors when sending or receiving files; the operator must restart a data transfer sequence if an error occurs. When receiving files, each file is opened with the same amount of space (using the operator supplied value); unused space is not freed.

Method 2 -- searches the catalog for the validity of operator supplied file names when sending or receiving files; new names are requested automatically if needed. When receiving files, each file is opened with the allotted space temporarily equal to all available space; then unused space is freed when a file is closed.

NOTE:

This question is omitted if the disk device is neither the send nor receive storage media.

QUESTION K --- Enter the CRT line length size for the system which will execute the Teletype/2741 emulator.

NOTE:

When any of the SYSGEN questions refer to a "disk," this includes a mini-diskette, floppy, or a hard disk drive. For the PCS-II system which is mini-diskette based, the only valid mini-diskette device addresses are 310 or B10.

ASYNC MASTER X.7

SYSGEN CHECKLIST

Table 3.1

A S Y N C H R O N O U S P A C K A G E

A. THE SYSGEN PROGRAM WAS JUST LOADED FROM

REPLY	DESCRIPTION
1	DISK UNIT 310
2	DISK UNIT B10
3	DISK UNIT 320
4	DISK UNIT B20

B. THE GENERATED SYSTEM WILL BE CREATED ONTO

REPLY	DESCRIPTION
1	DISK UNIT 310
2	DISK UNIT B10
3	DISK UNIT 320
4	DISK UNIT B20

C. THE SYSTEM DESIRED IS

REPLY	DESCRIPTION
1	TELETYPE EMULATOR
2	IBM 2741 EMULATOR

D. THE CODE SET TO BE USED FOR THE IBM 2741 EMULATION IS

REPLY	DESCRIPTION
1	CORRESPONDENCE
2	BCD
3	EBCD

E. WILL GENERATED SYSTEM BE COPIED TO CASSETTE FOR LOADING

REPLY	DESCRIPTION
1	NO
2	YES

F. GENERATED SYSTEM WILL BE LOADED FROM

REPLY	DESCRIPTION
1	DISK UNIT 310
2	DISK UNIT B10
3	DISK UNIT 320
4	DISK UNIT B20

G. GENERATED SYSTEM WILL BE LOADED FROM

REPLY	DESCRIPTION
1	CASSETTE UNIT 10A
2	CASSETTE UNIT 10B
3	CASSETTE UNIT 10C

H. STORED DATA WILL BE TRANSMITTED FROM

REPLY	DESCRIPTION
1	DISK
2	CASSETTE
3	DUMMY FOR TESTING

I. RECEIVED DATA, IF STORED, WILL BE OUTPUT TO

REPLY	DESCRIPTION
1	DISK
2	CASSETTE

J. WHEN OPENING AND CLOSING DISK FILES, SYSTEM SHOULD USE

REPLY	DESCRIPTION
1	METHOD 1 (ON ERROR)
2	METHOD 2 (SRCH CATLG)

K. THE CRT LINE LENGTH IS

REPLY	DESCRIPTION
1	64 CHARACTERS
2	80 CHARACTERS

SYSGEN OPERATING INSTRUCTIONS

To generate a Teletype/2741 program, proceed as follows:

1. Mount the master diskette in any unit having an address 310, B10, 320, and B20.

2. Mount a formatted/indexed diskette (or disk) in any drive not used in Step 1 above.

3. Depending upon the drive used in Step 1 above, enter a command of the form:

   ```
   LOAD DC F  /xyz, "SYSGEN"
           R
   ```

   and key RETURN (EXEC).

4. Enter the command RUN and key RETURN(EXEC).

5. Respond to each question which appears on the CRT (See table 3.1 for listing of questions).

6. Now the SYSGEN program automatically generates a communications program fulfilling the options selected in Step 5 above. Several displays appear on the CRT; each display indicates the name of a file currently being opened, copied, merged, or closed. No operator intervention or action is required during this phase.

7. When the following display appears:

   ```
   SYSGEN SUCCESSFULLY COMPLETED.
   STOP
   :
   ```

   remove the master diskette and store until a new communications program with different options is needed.

8. Enter the command CLEAR and key RETURN(EXEC).

9. The operational Teletype/2741 emulation program now resides on the disk/diskette used in Step 2.

The disk/diskette used in Step 2 above now contains the following files:

2741	TELETYPE	DESCRIPTION
TTTSTART	TTYSTART	The intialization/loader module.
TTTPARAM	TTYPARAM	The parameter selection/default module
TTT-000A	TTY-000A	The control vector/parameter setting data file.
TTT-000B	TTY-000B	The CPU/controller interface module plus the selected I/O modules.
TTT-000C	TTY-000C	The parameter screen display control data file.
TTT-000D		The Correspondence/BCD/EBCD code set translation table data file.
TTT-000E		The tab setting buffer module.
ASC-000B	ASC-000A	The microcode data file for use with the 2228 communications controller only.

The existence of the files can be checked, if desired, by listing the contents of the catalog index.

10. Label the operational Teletype/2741 program obtained in step 2 (include the loading address corresponding to the reply given in step 5 for question F or G).

NOTE:

Since the SYSGEN program always produces files having the names shown in step 9, only one Teletype or 2741 program can be stored on the particular disk/diskette used in Step 2.

3.2.3 OPERATING THE TELETYPE/2741 EMULATOR PROGRAM

LOADING A COMMUNICATIONS PROGRAM

Whether stored on disk or cassette, each Teletype emulation program includes a file named TTYPARAM (the parameter setting/default module) and a file name TTYSTART (the loader module).

The corresponding files for the 2741 emulation program are TTTPARAM and TTTSTART.

LOADING A PROGRAM FROM DISK

1. Mount the disk on the drive corresponding to the "loading address." (Question F of table 2-1.)

2. Using the appropriate F or R parameter and the address (if not a default address), enter a command of the form:

   LOAD DC $\begin{matrix}F\\R\end{matrix}$ /xyz, "TTYPARAM" or "TTTPARAM" -- If the parameter settings are to be reviewed, or,

   LOAD DC $\begin{matrix}F\\R\end{matrix}$ /xyz, "TTYSTART" or "TTTSTART" -- If the defaulted parameter settings are to be used.

When the ready display (the colon and cursor) appears on the CRT, the program is loaded and a RUN command can be given. The displays, prompts, error messages, and general instructions associated with the operation of the programs are discussed in the sections which follow.

LOADING A PROGRAM FROM CASSETTE

The same procedure follows for that of loading from disk except that the load command is of the from:

LOAD /xyz "TTY-----" or "TTT-----"

OPERATIONAL FEATURES

1. THE PROGRAM "TTYPARAM"

Once the program is loaded and a RUN command is given, the CRT will display the following:

TELETYPE EMULATOR PARAMETERS

BAUD RATE	PARITY/	BITS/CHAR	STOP BITS
110	EVEN #	7#	1#
150	ODD	8	2
300	NONE		
1200			

HOST ECHOES EACH CHARACTER RECEIVED FROM TERMINAL - YES NO#

HOST RESPONDS TO EACH LINE RECEIVED FROM TERMINAL WITH:

LINE FEED ONLY LINE FEED AND OTHER CHARS# NOTHING

CONTROLS . . SPACE/BACKSPACE = SKIP TO NEXT/PRIOR PARAMETER GROUP

RETURN(EXEC) = CYCLE TO NEXT PARAMTER OPTION
RUN = STORE SELECTED PARAMTER SETTINGS

There are six (6) groups of parameters that are

- BAUD rate
- Parity type
- Bits per Character
- Stop bits
- Whether or not the host computer provides echoing
- The reaction of the host computer to each line received from the terminal (Wang 2200).

Provided with each parameter group is the allowable options within the parameter. For example, the parameter group BAUD rate has the following options:

- 110 BAUD
- 150 BAUD
- 300 BAUD
- 1200 BAUD

The selection of parameter choices is accomplished through a group of control keys (return/exec key, the space key, the backspace key and the run key). The combination of the listed active control keys allows the operator to conveniently access any/all parameters and input the choice. Settings during the operation of this module are considered to be the default settings of the Teletype program until such time as the parameters are changed. The following is a description of each control key's meaning.

- RETURN/EXEC key --- Cycles through the choices of the parameter group which the cursor is presently positioned in. The cycle is a closed loop within the parameter group.
- SPACE key --- Cycles forward through the parameter groups. The cylce is a closed loop within the six (6) parameter groups.
- BACKSPACE key --- Cycles backward through the parameter groups. Again, the cycle is a closed loop within the six (6) parameter groups.

- RUN key --- signals the system that the displayed parameter choices are acceptable to the operator. At this point the choices are stored as the default parameter settings and the TTYSTART module is loaded into the system.

NOTE:

Selections are designated by the system with a number sign (#). All keys except the above-listed control keys are inactive during parameter setting.

2. THE PROGRAM "TTYSTART"

Once the program is loaded and a RUN command is given, the system loads the communications board (whether it be a 2227B, 2228, 2228B, Option 62, or Option 62B Communications Controller) with the parameters selected/defaulted via the program TTYPARAM. During loading, there are no operator input requirements.

The program TTYSTART may be loaded by the operator to bypass TTYPARAM (parameter review/setting), or it may be automatically loaded by the program TTYPARAM once a RUN is keyed.

The system is loaded when the CRT displays the following menu:

```
'0 = MENU
'1 = ATTENTION
'2 = STORAGE SEND
'3 = PRINTER ON/OFF KEY
'4 = STORAGE RECEIVE ON/OFF KEY
'5 = CLOSE STORAGE RECEIVE FILE
'13 = ESCAPE KEY
'14 = BREAK KEY
'15 = CONTROL KEY

ONLY CRT ACTIVE ON RECEIVE

CONTROL KEYS -- SPECIAL FUNCTION KEYS ACTIVE
DURING PROGRAM EXECUTION
```

There are nine (9) special function keys active during program operation. Their definition and use follow (those keys whose use is restricted are noted below):

- '0 -- This key recalls the menu display depicted above. The key is inactive while data is being received. When batch data is being sent from storage, the key identifies an abort transmission request.

- '1 -- This key calls the ATTENTION subroutine (a subroutine which allows the operator to ready the receive storage device, i.e., select device address of disk or cassette, open file, etc.). The key is inactive while data is being received and/or while batch data is being sent from storage.

- '2 -- This key activates the send from storage sequence. Once keyed, prompts relating to the storage media, i.e., device address, etc., are provided. The key is inactive during reception of data from the host and/or during batch transmission of data from a storage device.

- '3 -- This key activates/deactivates the printer for printed output of received data. The key is inactive during reception of data and/or during batch transmission of data. Therefore, the key must be activated prior to the reception of data to be printed.

- '4 -- This key activates/deactivates the storage of received data on the storage device, i.e., disk or cassette. If active, all data received will be output to the sysgened device. The key is inactive during receive or batch send operations and should therefore be activated prior to the reception of data to be stored.

NOTE:

The CRT is always active during a receive operation. Therefore, even if another periperhal is activated, the received data will be displayed. Also, only one extra peripheral may be active at any one given time. In other words, the combination on ouput of received data can never be CRT, printer and storage device.

- '5 -- This key signals the closing of a storage receive file. The key is only active when the communications line is "quiet." If data is output to a storage device, the data is stored sequentially for the duration of storage being selected as an output device. However, at the time storage is deselected, the file is not closed (an operator may wish to store additional data within the same file). The file is closed only when '5 is keyed.

NOTE:

Once a file is closed, a new file is automatically opened.

- '13 -- The ESCAPE key. This key creates the escape code for normal Teletype operations. The key is inactive during reception of data and/or transmission of batch data.

- '14 -- The BREAK key. This key activates the break signal for normal Teletype operations. The key is inactive only during batch transmission of data since here it would have no significant meaning.

- '15 -- The CONTROL key. This key activates the "control" feature of normal Teletype. Once '15 is keyed, the next alpha key struck is transmitted as a control alpha. For example, a control "A" would be transmitted by keying '15 and then letter "A." If '15 is keyed and followed by a key other than an alpha character, the result is a deactivation of the control feature. Again, this key is inactive during reception of data and the transmission of batch data.

NOTE:

If a control "A" and a control "B," for example, must be sent sequentially, the operator sequence would be to key '15, the letter "A," '15, and then the letter "B."

During a batch transmission of data from a storage device, the only keys active are '0 (the ABORT key) and the RETURN/EXEC key. The RETURN/EXEC key is active in the event the line terminator transmitted by the system at the end of a batch line is received distorted. If that happens, a carriage return would renew the cycle of batch data transmission. Remember, Teletype protocol does not provide for any error checking except parity, if so optioned. In a batch environment, Teletype is not considered to be nearly as reliable as the bisynchronous protocols such as 2780, 3780, 3741, etc.

NOTE:

If a batch line is transmitted from storage and that line is received incorrectly by the host computer, there are no provisions for re-transmission of that line in Teletype protocol. Teletype is a visual check environment. One host may return an "INVALID CHARACTER" RE-ENTER" in recognition of a parity error, while another may send "ERROR, RE-ENTER LINE." In view of the many varied visual error responses a host may provide, and the added possibility that even the error message may have character distortion, the Teletype emulation program does not in any way attempt to isolate re-transmission requests from the host computer.

KEYBOARD ENTERED DATA

Once a line connection is established and the proper parameter settings have been selected, the program is acting as a Teletype. The keyboard is always active on send, and the typing of data results in the display of the typed data and the transmission of the data, character by character. For example, if the letter "A" is keyed, the letter "A" is displayed on the CRT and is also transmitted to the host computer/remote site. In addition to the normal type keys and the special function keys previously discussed, the following four keys are also active.

- SIN(or the upper case "(" -- This keys display and transmits an open bracket: "["
- COS(or the upper case ")" -- This key displays and transmits a closed bracket: "]"
- PI or the upper case "/" -- This key displays and transmits a backward slash: "\"
- EXP(or the upper case "-" -- This key displays and transmits a left arrow: "←"

3. THE PROGRAM "TTTPARAM"

Once the program is loaded and a RUN command is given, the CRT will display the following:

IBM 2741 EMULATOR PARAMETERS

TRANSMISSION RATE

134.5 BAUD #
300.0 BAUD

CONTROLS . . . RETURN(EXEC) = CYCLE TO NEXT PARAMETER OPTION
RUN = STORE SELECTED PARAMETER SETTINGS

The only parameter that is operator selectable is the line transmission rate. The BAUD rate options are either 134.5 BAUD or 300.0 BAUD.

The selection of the BAUD rate parameter choices is accomplished through a group of control keys (return/exec key and the run key). The combination of the listed active control keys allows the operator to conveniently access this

parameter and input the choice. Settings during the operation of this module are considered to be the default settings of the 2741 program until such time as the parameters are changed. The following is a description of each control key's meaning.

- RETURN/EXEC key --- Cycles through the choices of the parameter group which the cursor is presently positioned in. The cycle is a closed loop within the parameter group.

- RUN key --- signals the system that the displayed parameter choices are acceptable to the operator. At this point the choices are stored as the default parameter settings and the TTTSTART module is loaded into the system.

NOTE:

Selections are designated by the system with a number sign (#). All keys except the above-listed control keys are inactive during parameter setting.

4. THE PROGRAM "TTTSTART"

Once the program is loaded and a RUN command is given, the system loads the communications board with the parameters selected/defaulted via the program TTTPARAM. During loading, there are no operator input requirements.

The program TTTSTART may be loaded by the operator to bypass TTTPARAM (parameter review/setting), or it may be automatically loaded by the program TTTPARAM once a RUN is keyed.

The system is loaded when the CRT displays the following menu:

```
'0 = MENU
'1 = ATTENTION
'2 = STORAGE SEND
'3 = PRINTER ON/OFF KEY
'4 = STORAGE RECEIVE ON/OFF KEY
'5 = CLOSE STORAGE RECEIVE FILE
'6 = DISPLAY/SET TAB STOPS
'12 = TAB KEY
'13 = UPSHIFT KEY
'14 = DOWNSHIFT KEY
'15 = BREAK KEY

ONLY CRT ACTIVE ON RECEIVE
```

CONTROL KEYS -- SPECIAL FUNCTION KEYS ACTIVE DURING PROGRAM EXECUTION

There are eleven (11) special function keys active during program operation. Their definition and use follow (those keys whose use is restricted are noted below):

- '0 -- This key recalls the menu display depicted above. The key is inactive while data is being received. When batch data is being sent from storage, the key identifies an abort transmission request.

- '1 -- This key calls the ATTENTION subroutine (a subroutine which allows the operator to ready the receive storage device, i.e., select device address of disk or cassette, open file, etc.). The key is inactive while data is being received and/or while batch data is being sent from storage.

- '2 -- This key activates the send from storage sequence. Once keyed, prompts relating to the storge media, i.e., device address, etc., are provided. The key is inactive during reception of data from the host and/or during batch transmission of data from a storage device.

- '3 -- This key activates/deactivates the printer for printed output of received data. The key is inactive during reception of data and/or during batch transmission of data. Therefore, the key must be activated prior to the reception of data to be printed.

- '4 -- This key activates/deactivates the storage of received data on the storage device, i.e., disk or cassette. If active, all data received will be ouput to the sysgened device. The key is inactive during receive or batch send operations and should therefore be activated prior to the reception of data to be stored.

NOTE:

The CRT is always active during a receive operation. Therefore, even if another peripheral is activated, the received data will be displayed. Also, only one extra peripheral may be active at any one given time. In other words, the combination on output of received data can never be CRT, printer and storage device.

- '5 -- This key signals the closing of a storage receive file. The key is only active when the communications line is "quiet." If data is ouput to a storage device, the data is stored sequentially for the duration of storage being selected as an output device. However, at the time storage is deselected, the file is not closed (an operator may wish to store additional data within the same file). The file is closed only when '5 is keyed.

NOTE:

Once a file is closed, a new file is automatically opened.

- '6 -- This key is used to display the tab stop positions on the CRT. The CRT will display the following:

```
DISPLAY/SET TAB STOPS

T=TAB      LINE ERASE=DELETE TAB          RETURN=END

.........1.........2.........3.........4.........5...
......6.........7.........8.........9.........0......
...1.........2.........3.........4.........5.........
```

To set the tab stop positions (up to 158 positions), move the cursor either forward (SPACE key) or backward (BACKSPACE key) to the desired line position. Use the "T" key to set a tab stop. To delete a tab stop, use the LINE ERASE key. After the tabs are set, key RETURN(EXEC) and the CRT will display the following prompt:

```
SAVE ABOVE TAB SETTING AS SYSTEM DEFAULT
(Y/N)?___
```

Enter "Y" or "N". If "Y" is entered, the tab settings will be entered as the system default tab settings. The CRT will now display the main menu.

- '12 -- This key moves the CRT cursor to the next tab stop.

- '13 -- This key enters a SHIFT UP control character from the keyboard.

- '14 -- This key enters a SHIFT DOWN control character from the keyboard.

- '15 -- The BREAK key. This key activates the break signal for normal 2741 operations. The key is inactive only during batch transmission of data since here it would have no significant meaning.

During a batch transmission of data from a storage device, the only keys active are '0 (the ABORT key) and the RETURN/EXEC key. The RETURN/EXEC key is active in the event the line terminator transmitted by the system at the end of a batch line is received distorted. If that happens, a carriage return would renew the cycle of batch data transmission. Remember, 2741 protocol does not provide for any error checking except parity. In a batch environment, 2741 is not considered to be nearly as reliable as the bisynchronous protocols such as 2780, 3780, 3741, etc.

NOTE:

If a batch line is transmitted from storage and that line is received incorrectly by the host computer, there are not provisions for re-transmission of that line in 2741 protocol. The 2741 is a visual check environment. One host may return an "INVALID CHARACTER" RE-ENTER" in recognition of a parity error, while another may send "ERROR, RE-ENTER LINE." In view of the many varied visual error responses a host may provide, and the added possibility that even the error message may have character distortion, the 2741 terminal emulation program does not in any way attempt to isolate re-transmission requests from the host computer.

KEYBOARD ENTERED DATA

Once aline connection is established and the proper parameter settings have been selected, the program is acting as a 2741 terminal. The keyboard is always active on send, and the typing of data results in the display of the typed data and the transmission of the data, character by character. For example, if the letter "A" is keyed, the letter "A" is displayed on the CRT and is also transmitted to the host computer. In addition to the normal type keys and the special function keys previously discussed, the following four keys are also active:

- SIN(or the upper case "(" -- This key displays and transmits an open bracket: "["
- COS(or the upper case ")" -- This key displays and transmits a closed bracket: "]"
- PI or the upper case "/" -- This key displays and transmits a backward slash: "\"
- EXP(or the upper case "-" -- This key displays and transmits a left arrow: "←"

3.3 IBM 2780/3741/3780 EMULATION

3.3.1 INTRODUCTION

The purpose of this section is to explain the operational procedures associated with the 2228/2228B/Option 62B bi-sync controllers and the corresponding bi-sync terminal emulation programs.

The following versions of the bi-sync emulator programs on diskette are available:

2780 - R2.8 for 2228 (#701-2092A)
R3.3 for 2228B (#702-2174A)
or Op-62B (#701-8002A)

3741 - R3.3 for 2228B (#701-2213)
or Op-62B (no part # assigned))

3780 - R2.8 for 2228
R3.3 for 2228B (#701-2214)
or Op-62B (no part # assigned)

The terminal emulator programs are designed with ease-of-operation as a fundamental consideration. Therefore, status messages and operator instructions appear on the CRT automatically during program execution. There are several versions of the program generated from the same emulation utilities package, depending upon the I/O peripherals selected and the other options related to data transmission/reception.

For additional information on the operating procedure, refer to the corresponding emulation utilities user manual.

3.3.2 SYSTEM GENERATION OF EMULATOR PROGRAMS

A 2780/3741/3780 Emulation Utilities Package diskette is supplied to the customer. The user then can generate communications programs to suite his particular I/O requirements from this package.

The main feature of the emulation utilities package is a system generation program named SYSGEN which allows the user, in response to a series of CRT questions, to designate the I/O peripherals and other options available, such as the type of modem to be used. This procedure produces different versions of terminal emulator programs, each with its own input and output modules. Each time SYSGEN is run, it produces a specific version of the

emulator which is recorded on a separate disk/diskette. Terminal emulator programs, which are thus produced, may be later loaded into the 2200 system or PCS II, equipped with the proper bi-sync controller, and used to actually implement emulation of bi-sync communications (BSC) protocol. It is suggested that the user employ a separate disk/diskette for each version of the emulator produced by the SYSGEN program, since each version will be named the same SYSGEN.

NOTE:

The SYSGEN features are not available for mini-floppy based systems (PCS-II). However, pre-sysgened programs are available on mini-floppy. Operation of this emulator program is the same as for the diskette version (refer to section 3.3.3).

USING SYSGEN ON 2200 SYSTEM

The following procedure is used to generate a 2780/3741/3780 emulation program using a 2200 system with dual diskette drives:

1. Place the master diskette (that contains the SYSGEN program) in the left/fixed drive (DCF) or in the right/removable drive (DCR).

2. Place a formatted/indexed diskette in the other drive.

3. Clear the 2200 memory.

4. LOAD DC^{F}_{R} "SYSGEN", RETURN(EXEC).

5. Key RUN, RETURN(EXEC)

6. Respond to each question that appears on the CRT (see table 3.2 for listing of the questions).

7. The SYSGEN program automatically generates a terminal emulator program in response to the options selected in the previous step. When this process is complete, the following message will appear on the CRT:

```
SYSGEN SUCCESSFULLY COMPLETED
STOP
:_
```

8. Remove and store the master diskette until a new terminal emulator program with different options is needed.

2780/3741/3780 MASTER
R3.3 SYSGEN CHECKLIST
Table 3.2

The following questions are common to all three R3.3 SYSGEN masters except as noted:

A. THE SYSGEN PROGRAM WAS JUST LOADED FROM

REPLY	DESCRIPTION
1	DISK UNIT 310
2	DISK UNIT B10
3	DISK UNIT 320
4	DISK UNIT B20

B. THE GENERATED SYSTEM WILL BE CREATED ONTO

REPLY	DESCRIPTION
1	DISK UNIT 310
2	DISK UNIT B10
3	DISK UNIT 320
4	DISK UNIT B20

C. GENERATED SYSTEM WILL BE LOADED FROM

REPLY	DESCRIPTION
1	DISK UNIT 310
2	DISK UNIT B10
3	DISK UNIT 320
4	DISK UNIT B20

D. DATA WILL BE TRANSMITTED FROM

REPLY	DESCRIPTION
1	DISK
2	CARD READER
3	DUMMY FOR TESTING

E. RECEIVED DATA WILL BE OUTPUT TO

REPLY	DESCRIPTION
1	DISK
2	LINE PRINTER
3	DISK AND PRINTER
4	DUMMY FOR TESTING

F. WHEN OPENING AND CLOSING DISK FILES, SYSTEM SHOULD USE:

REPLY	DESCRIPTION
1	METHOD 1 (ON ERROR)
2	METHOD 2 (SRCH CATLG)

G. TYPE OF MODEM TO BE USED IS

REPLY	DESCRIPTION
1	SYNCHRONOUS 2000 - 4800
2	2400 BPS NULL - MODEM
3	4800 BPS NULL - MODEM
4	ASYNCHRONOUS 1200 BPS

H. MODEM OPERATES

REPLY	DESCRIPTION
1	HALF DUPLEX (DIAL)
2	FULL DUPLEX

For 2780 MASTER:

I. DATA WILL BE TRANSMITTED BETWEEN THIS SYSTEM AND

REPLY	DESCRIPTION
1	ANY OTHER COMPUTER
2	A WANG 2200 SYSTEM

For ALL MASTERS:

J. WHEN TRANSMITTING, CONTROLLER SHOULD BLOCK DATA INTO

REPLY	DESCRIPTION
1	MULTI-RECORD BLOCKS
2	SINGLE RECORD BLOCKS

For 3780 MASTER:

K. RECEIVED DATA MAY CONTAIN

REPLY	DESCRIPTION
1	SPACE COMPRESSION
2	HORIZONTAL TABBING

For 3780 MASTER:

L. DATA WILL BE TRANSMITTED

REPLY	DESCRIPTION
1	COMPRESSED
2	AS IS

For 3741 MASTER:

M. SHOULD TERMINAL IDENTIFICATION BE TRANSMITTED

REPLY	DESCRIPTION
1	NO
2	YES

The questions for the 2.8 version of the 2780 Master are the same as for the 3.3 version with the following exceptions:

a) question H is omitted, and,

b) the reply to question G is:

1. 201A, 201C, or 208B

2. 202C or 202S.

3.3.3 LOADING THE EMULATOR PROGRAM

Each 2780/3741/3780 emulator program, generated using SYSGEN, includes an initialization/loader module named TCSTART. The following information describes the loading and operating procedure using either a 2200 system or PCS II.

LOADING TCSTART ON 2200 SYSTEM OR PCS II

The following procedure is used to load a 2780/3741/3780 emulation program in 2200 system or PCS II with dual disk/diskette/mini-diskette drives:

1. Place the emulation disk/diskette/mini-diskette in the drive corresponding to the "loading address" (i.e., the address specified in reply to SYSGEN question C when the program was generated).

NOTE:

If the disk/diskette/mini-diskette is mounted in the wrong drive, then, when it is loaded, an ERR 64 may be displayed on the CRT. Remount the disk/diskette/ mini-diskette in the proper drive.

2. Clear the 2200 or PCS II memory.

3. Key LOAD DC^{F}_{R} "TCSTART", RETURN(EXEC).

4. Key RUN, RETURN(EXEC).

After loading is successfully completed, the following is displayed on the CRT:

```
                ACTIVE KEYBOARD CONTROLS
0=CONTROL   1=ATTN     2=SEND     3=SEND TRSP   C/R=KYBD

 PRINTER NOT READY or RECEIVE DISK FILE NOT OPENED

---MODEM SIGNALS---     BLOCKS     BLOCKS
DTR DSR RTS CTS CAR      SENT       RECD          ---MODE---
 *                       XXXX       XXXX            CONTROL
```

EXPLANATION OF THE DISPLAY:

1. ACTIVE KEYBOARD CONTROLS - This area of the CRT screen indicates which keyboard controls are active and their particular function.

NOTE:

In the different modes of operation, the active keyboard controls may take on a different function. See Table 3.5.

2. MODEM SIGNALS - This area displays five of the modem status signals, which are constantly scanned and updated while the program is operating. An asterisk will indicate which modem signal is currently active. See Table 3.3 for an explanation of each modem signal.

3. BLOCKS SENT - This area indicates the number of blocks transmitted; initially it is blank. When the system enters the SEND mode, it is set to zero and is incremented by one as each block is sent. The count will not reset to zero until the system again enters the SEND mode.

4. BLOCKS RECD - This area indicates the number of blocks received; initially it is blank. When the system enters the RECEIVE mode, it is set to zero and is incremented by one as each block is received. The count will not reset to zero until the system again enters the RECEIVE mode.

5. MODE - This area indicates the current mode of operation of the system. The five modes of operation are: CONTROL, BID, SEND, RECEIVE, and ATTENTION (Refer to Table 3.4 for the explanation of each mode).

6. OUTPUT DEVICE STATUS - This area displays the receive device ready/not-ready status messages. Depending upon the output device selected, the messages are:

PRINTER NOT READY
or
RECEIVE DISK FILE NOT OPENED

CAUTION:

Do not touch the 2200 of PCS II RESET button at any time during operation of the emulator program. If a RESET signal occurs during a 2200 or PCS II CPU to controller sequence, the controller may "lock" thereby requiring the operator to clear the 2200 or PCS II and reload the emulator program to recover.

MODEM SIGNAL CATEGORIES AND STATUS MESSAGES

Table 3.3

Category	Definition	Status Message
DTR	Data Terminal Ready	If an asterisk is present, the microcode has been loaded in the telecommunications controller by the emulation program, and the controller is now operational.
DSR	Data Set Ready	If an asterisk is present, the modem has been placed in the data position. Though the DSR asterisk must be present for data transmission/reception to take place, its presence does not always ensure the possibility. Depending upon the characteristics of the modem being used, the DSR asterisk may appear when the local modem is in the data position and the remote end has not yet completed the communications link (or has disconnected an already established link).
RTS	Request to Send	If an asterisk is present, the controller is signaling the modem that it desires to send data.
CTS	Clear to Send	If an asterisk is present, the modem is signaling the controller that the modem is ready to send data.
CAR	Carrier	An asterisk indicates a carrier is present, i.e., the sine wave which carries the transmitted or received signal is present.

MODES OF OPERATION
Table 3.4

MODE	DESCRIPTION
CONTROL	The system automatically enters the CONTROL mode first. In this mode, the system monitors both the communications line and the keyboard for an input from either the remote end of the line or the operator at this terminal. When the input occurs, the system branches to the appropriate location in the program and may enter another mode; otherwise, the system will remain in the CONTROL mode.
BID	In this mode, the system is bidding with the remote site to gain control of the communications line. The system will continue to bid until one of the following occurs: a) the remote end gives positive acknowledgement, b) 15 retransmissions of the ENQ fail, or c) the operator aborts the transmission via S.F.'0. If a) occurs, then the system will enter the SEND mode; otherwise, the system returns to the CONTROL mode.
SEND	In this mode, the system will transmit data (either normally or transparently) until one of the following occurs: a) all the data is sent, b) 3 retransmissions of the data in response to NAK fail, c) 15 retransmissions of ENQ fail, d) an operator at either end of the line aborts the transmission, or e) transmission difficulties arise, such as the line being disconnected. After a), b), c), d), or e) occurs, the system then returns to the CONTROL mode.

RECEIVE

Only the remote end can activate this mode. In the RECEIVE mode, the system receives the data transmitted from the remote end and routes it to the selected output device until one of the following occurs:

a) an end-of-transmission code is received,

b) an operator at either end of the line aborts the transmission, or

c) transmission difficulties arise.

After a), b), or c) occurs, the system returns to the CONTROL mode.

ATTENTION

In this mode, all operations are halted and the operator is allowed to ready the output device.

ACTIVE KEYBOARD CONTROLS DURING EACH MODE OF OPERATION
Table 3.5

CONTROL MODE

S.F.'0 = CONTROL	Directs the system to return to the CONTROL mode
S.F.'1 = ATTN	Directs the system to enter the ATTENTION mode
S.F.'2 = SEND	Directs the system to transmit data in non-transparent mode (EBCDIC character form) after first requesting operator-supplied input device related information and successfully bidding for the line.
S.F.'3 = SEND TRSP	Directs the system to transmit data in transparent mode, i.e., to send data in binary form using special control characters defined by the BSC protocol, after the first requesting operator-supplied input device related information and successfuly bidding for the line.
C/R = KYBD	The RETURN(EXEC) key directs the system to accept a single record (up to 63 characters). The BACKSPACE and LINE ERASE keys are active for editing the keyboard input. The RETURN(EXEC) must be keyed again to signify the end-of-message and direct the system to bid to transmit the record (no message is sent if the line is blank).

BID MODE

S.F.'0 = ABORT	Directs the system to terminate the bid cycle and return to the CONTROL mode. No data or message is sent.

SEND MODE

S.F.'0 = ABORT	Directs the system to terminate the transmission. However, before the system returns to the CONTROL mode, the system will send the last data block currently in the transmitter buffer and then signal the remote end that transmission is aborted.

RECEIVE MODE

S.F.'0 = ABORT	Directs the system to terminate reception. However, before the system returns to the CONTROL mode, the system signals the remote end that an abort request has been made, and then follows the abort procedure used by the remote end.

ATTENTION MODE

In this mode, the active controls are dependent upon the designated output device.

1. DISK/DISKETTE/MINI-DISKETTE (METHOD 1, ON ERROR):

S.F.'0 = CONTROL — Directs the system to return to the CONTROL mode.

2. DISK/DISKETTE/MINI-DISKETTE (METHOD 2, SRCH CATLG):

S.F.'0 = CONTROL — Directs the system to return to the CONTROL mode.

S.F.'1 = OPEN FILE — Directs the system to open a receive file through a series of CRT prompts. The system then returns to the CONTROL mode upon successfully opening a file.

S.F.'2 = ERASE FILE — Directs the system to erase any file in the catalog index. The system then returns to the CONTROL mode upon successfully erasing the file.

3. PRINTER

S.F.'0 = CONTROL — Directs the system to return to the CONTROL mode.

S.F.'13 = FORM FEED — Executes a form feed operation. The system then returns to the CONTROL mode.

S.F.'14 = VERT TAB — Executes a vertical tab operation. The system then returns to the CONTROL mode.

S.F.'15 = LINE FEED — Executes a line feed operation. The system then returns to the CONTROL mode.

4. DISK/DISKETTE/MINI-DISKETTE AND PRINTER*

The active controls are same controls active for disk/diskette/mini-diskette in the ATTENTION mode depending upon which file opening method is in effect.

3.3.4 ESTABLISHING A CONNECTION

After the system is loaded, make sure that one end of the TC cable is connected to the modem and the other end to the 2228/2228B/Option 62B controller board. A modem connection to the remote site must be established by dialing the remote site and placing the modem in the DATA mode when the carrier tone is heard on the telephone. If a call is received on the modem from the remote site, then place the modem in the DATA mode. When the connection is established, the DSR (data set ready) indicator on the modem/CRT will be on and the system is ready for data transfer.

NOTE:

For some modems, DSR will be on after the DATA button is pushed even if a true connection is not established with the remote end.

3.3.5 SIGNING ON

When operating the system as a terminal to a large computer system, an IBM System/360 for example, a transmission of a "SIGN-ON" card/card image is usually necessary before data can be transmitted or received. The sign-on card/card image can be stored on a disk/diskette/mini-diskette/card and later transmitted as the first file.

A special function of the terminal emulator program used on a 2200 system or PCS II allows the operator to transmit a single record from the keyboard while the system is in the CONTROL mode (See table 3.5). The sign-on card image can be entered and transmitted in that manner.

NOTE:

Sign-on procedures may vary between different computer systems, so it is necessary to obtain the proper procedure for each particular system.

EXAMPLE OF SIGN-ON CARD IMAGE

```
COL            1    1    2    2    3    3    4
 #   1...5....0....5....0....5....0....5....0
     /*SIGNON       REMOTE7     YVJHNDBR
                (END OF FILE AFTER FIRST CARD)
```

3.3.6 TRANSMITTING A FILE

The following information describes the procedures used to transmit a data file from either a 2200 system or a PCS II after the terminal emulation program is loaded and the system is in the CONTROL mode.

NOTE:

If the system cannot be signed on or transmission problems exist, please contact the Home Office.

TRANSMITTING A FILE FROM 2200 SYSTEM OR PCS II

The procuedure used to transmit a file from a 2200 system or PCS II depends upon the input device selected. See figure 3.1 for examples of data files.

1. DISK/DISKETTE/MINI-DISKETTE

Refer to Figure 3.2 for typical operator sequence for disk/diskette/mini-diskette file transmission.

a) Mount the disk/diskette/mini-diskette containing the file to be transmitted onto a disk/diskette/mini-diskette drive.
b) Key S.F.'2 = SEND for normal transmission mode or S.F.'3 = SEND TRSP for transparent transmission mode.
c) CRT will display:

```
ENTER SEND DEVICE ADDRESS   1=310  2=B10  3=320  4=B20
```

Enter the address of the drive where the data file is located. Key RETURN(EXEC).

d) CRT will display:

```
ENTER FILE NAME       1 ?__
```

Enter the name of the first file to be transmitted. Key RETURN(EXEC).

e) CRT will prompt the operator for the name of the next file(s) to be transmitted as in previous step (up to 5 files or 10 files if the program was generated for communication between two Wang systems). When all the file names are entered, key RETURN(EXEC). If only one file name was entered, then proceed to step g.

f) CRT will display

SEND FILES SEPARATELY OR COMBINED AS ONE
(1=SEPARATE)?__

Key "1", RETURN(EXEC) if it is desired to send the files separately or
Key RETURN(EXEC) if it is desired to send all the files combined as only one file.

g) System will enter into the BID mode; if the bidding is successful, the system will enter the SEND mode and transmit the file(s).

2. CARD READER

a) Place the deck of cards containing the data file(s) to be transmitted into the card hopper.

b) Key S.F.'2 = SEND for normal transmission mode or
Key S.F.'3 = SEND TRSP for transparent transmission mode

c) CRT will display:

END OF FILE AT HOPPER EMPTY 1= YES__

Key "1", RETURN(EXEC) to transmit END-OF-FILE when the card hopper is empty or
Key RETURN(EXEC) if END-OF-FILE card is already in the card deck.

d) CRT will display:

READY CARD READER. KEY RETURN TO CONTINUE ?__

Now push the "RESET" button on the card reader and key RETURN(EXEC) on the 2200.

e) System will enter into the BID mode; if bidding is successful, system will enter the SEND mode and transmit the file(s).

EXAMPLES OF DATA FILES
Figure 3.1

EXAMPLE 1

```
11W33  JOB RAV,PRTY=4
1*ROUTE  PRINT REMOTE7
11 EXEC PGM=IEBGENER
11SYSPRINT DD SYSOUT=A
11SYSIN DD DUMMY
11SYSUT2 DD SYSOUT=A
11SYSUT1 DD *
-DATA-
-DATA-
```

(END-OF-FILE AFTER LAST DATA CARD)

EXAMPLE 2

```
USP149,OLIVER
 (END-OF-FILE)
FILE WANG
 (END-OF-FILE)
INFILE WANG
 (END-OF-FILE)
DATA FILE
 (END-OF-FILE)
OUTFILE WANG,PR,120
 (END-OF-FILE)
OFF
 (END-OF-FILE)
```

3.3.7 RECEIVING A FILE

Receiving a file is essentially automatic, however, certain requirements concerning the designated output device must be satisfied in order to receive data using either a 2200 system or PCS II.

RECEIVING A FILE ON A 2200 SYSTEM OR PCS II

The procedure to ready the output device to receive the data file(s) depends upon the particular output device selected.

1. PRINTER

   If the printer is not ready to receive data, the CRT will display the message:

   PRINTER NOT READY

   To ready the printer, check that:

   a) The printer is powered-on.
   b) The printer is selected and the SELECT light is lit.
   c) The printer contains paper.

   Data will be automatically printed out as it is received.

2. DISK/DISKETTE/MINI-DISKETTE (METHOD 1, ON ERROR)

   If the disk/diskette/mini-diskette is not ready to store the incoming data, the CRT will display the message:

   RECEIVE DISK FILE NOT OPENED

A TYPICAL OPERATOR SEQUENCE FOR DISK FILE TRANSMISSION

Figure 3.2

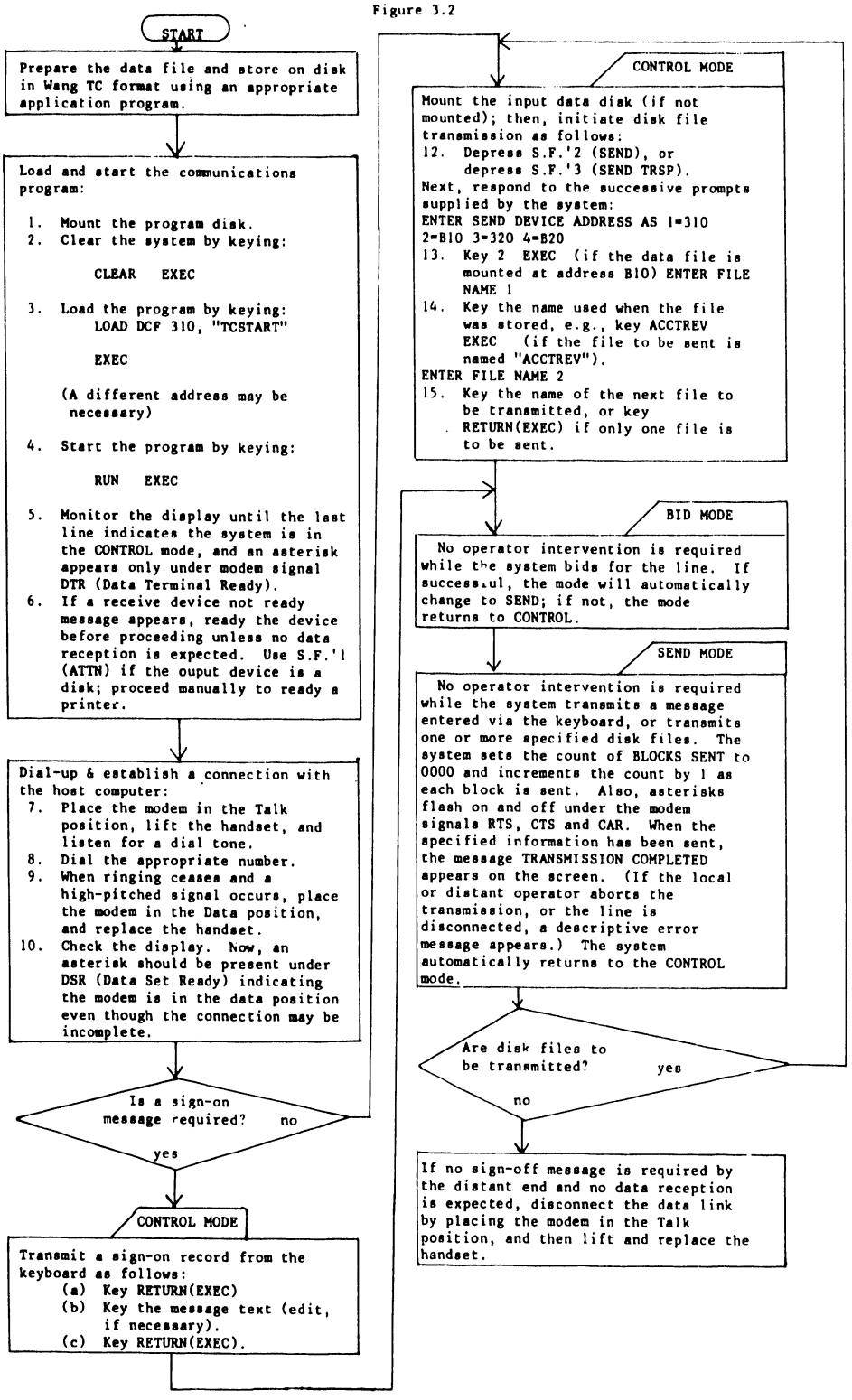

The operator must open a receive file. The procedure is as follows:

a) Key S.F.'1= ATTN when the system is in the CONTROL mode.
b) CRT will display:

```
ENTER RECEIVE DEVICE ADDRESS   1=310  2=B10  3=320  4=B20  ?__
```

Enter the address of the drive where the data will be stored. Key RETURN(EXEC).

c) CRT will display:

```
ENTER FILE IDENTIFICATION NOT TO EXCEED 6 CHARACTERS  ?__
```

Enter your file name, key RETURN(EXEC).

d) CRT will display:

```
ENTEk NUMBER OF SECTORS TO OPEN RECEIVE FILES  ?__
```

Enter the desired file length in sectors (each sector contains 256 bytes). Key RETURN(EXEC). For a diskette, the maximum single file that can be stored is 1023 sectors with 1 sector reserved for the catalog index. For a mini-diskette, a maximum of only 349 sectors are available for a single file with 1 sector reserved for the catalog index.

e) Upon receiving valid replies to the above prompts, the CRT will display:

```
RECEIVE FILE XXXXXX 01 OPENED
```

The system automatically adds 2 bytes to the file name to identify each sequential file in a multiple file transmission. Each sequential file will be opened with the same number of sectors that were defined in step d.

f) The system returns to the CONTROL mode and the disk/diskette/mini-diskette is ready.

3. DISK/DISKETTE/MINI-DISKETTE (METHOD 2, SRCH CATLG)

If the disk/diskette/mini-diskette is not ready to store the incoming data, the CRT will display the message:

```
RECEIVE DISK FILE NOT OPENED
```

The operator must open a receive file. The procedure is as follows:

a) Key S.F.'1= ATTN when the system is in the CONTROL mode.

b) Key S.F.'1= OPEN FILE
c) CRT will display:

ENTER RECEIVE DEVICE ADDRESS 1=310 2=B10 3=320 4=B20 ?__

Enter the address of the drive where the data will be stored. Key RETURN(EXEC).

d) CRT will display:

ENTER FILE IDENTIFICATION NOT TO EXCEED 6 CHARACTERS ?__

Enter your file name, key RETURN(EXEC).

e) Upon receiving valid replies to the above prompts, the CRT will display:

RECEIVE FILE XXXXXX 01 OPENED

The system automatically adds 2 bytes to the file name to identify each sequential file in a multiple file transmission. The allotted file space is equal to all the currently available space on the disk/diskette. For a diskette, the maximum single file that can be stored is 1023 sectors with 1 sector reserved for the catalog index. For a mini-diskette, the maximum single file is 349 with 1 sector reserved for catalog index.

f) The system returns to the CONTROL mode and the disk/diskette/mini-diskette is ready.

NOTE:

Prior to displaying the first prompt, the system erases any currently open file on the disk/diskette/ mini-diskette.

4. DISK/DISKETTE/MINI-DISKETTE AND PRINTER

For this designated ouput device, the system displays any not-ready status messages for the disk/diskette/mini-diskette first. After the disk/diskette/mini-diskette is readied, then any printer not ready status messages will appear and the printer must be readied.

3.3.8 CONSTRUCTION OF DATA FILES

INTRODUCTION

Wang Laboratories has defined a "TC format" for the storage of disk/diskette/mini-diskette data files (See Appendix A). TC format is a convenient technique by which variable length records (up to 192 bytes maximum) can be stored on a disk/diskette/mini-diskette for subsequent transmission. A record is the data in a single punch card or a single line of print. The "card image" or the information contained on a record is stored on the disk/diskette/mini-diskette in TC format. For most IBM terminals, a record contains 80 characters or bytes.

The TC format can be bypassed only in the special case where the emulator program was generated for communications between two Wang systems. Otherwise, data to be transmitted from the disk/diskette/mini-diskette must be stored in TC format prior to going on-line for transmission. Furthermore, data received for ouput to the disk/diskette/mini-diskette is automatically stored in TC formatted files (except for the special case mentioned above).

NOTE:

Refer to section 1.3.2.1 (TC Support Utilities 1) for information on construction of TC formatted data files.

4. DIAGNOSTICS

4.1 OFF-LINE DIAGNOSTICS

4.1.1 INTRODUCTION

The off-line diagnostics available at the present time include programs for the following model telecommunications controllers:

2227B
2228
2228B
Option 62
Option 62B

The diagnostic programs for the Model 2227B, 2228, and 2228B controllers can be found on the 2200 PERIPHERAL DIAGNOSTIC DISKETTE (W.L. # 701-2180A); the diagnostic programs for the model Option 62 Controller are on the FCS/2200 PERIPHERAL DIAGNOSTIC TAPE (#701-0414A); the diagnostic programs for the model Option 62B are on the PCS-II PERIPHERAL DIAGNOSTIC MINIDISKETTE (#701-8001).

Basically these diagnostics are divided into two parts:

a) memory diagnostic and
b) loopback hardware check. To run the loopback test a 25 pin RS-232-C male connector is required (W.L. Part # 350-1030). The wiring on the test connector is shown below.

For model 2228 only:

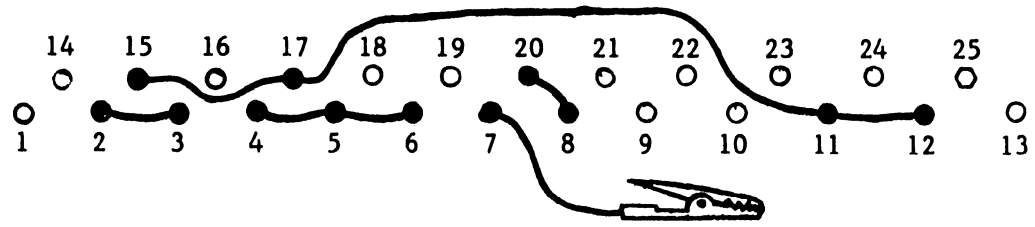

Jumper	PIN	to	PIN
	2		3
	4		5
	5		6
	11		12
	11		17
	15		17
	8		20
	7		Alligator clip to TP1 (on 6724 board)

CONNECTOR JUMPER FOR 2228
Figure 4.1

For models 2227B, 2228B, Option 62, and Option 62B:

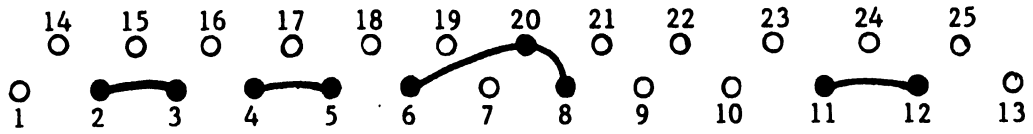

Jumper	PIN	to	PIN
	2		3
	4		5
	11		12
	6		20
	20		8

CONNECTOR JUMPER
Figure 4.2

4.1.2 2200 PERIPHERAL DIANOSTIC DISKETTE

OPERATING PROCEDURE

The diagnostics for the Model 2227B, 2228, and 2228B communications controllers are available on a single floppy diskette labeled 2200 PERIPHERAL DIAGNOSTIC DISKETTE (W.L. #701-2108A) and are accessed through a loader module program named "START." The diagnostics require a maximum of 16K of CPU RAM to be loaded. The appropriate loopback connector must be plugged into the female RS-232-C connector which is wired to the communications controller (refer to figure 4.1 or 4.2). For the model 2227B, 2228, and 2228B, this connector is located on the top of the controller mounting bracket. The address on any of the controllers must be set at HEX 1C to load and run the diagnostic programs.

To load the cassette version:

1) Key LOAD, RETURN(EXEC)
2) Key RUN, RETURN(EXEC)

The CRT will display the following system menu:

```
HARDWARE DIAG      DISK CATALOG
TO LOAD AND RUN, PRESS S.F. KEY CORRESPONDING TO CATEGORY.

S.F. '1 FOR OUTPUT WRITERS      S.F. '2 FOR TELCOM

S.F. '3 FOR I/O DEVICES
```

To access the diagnostic programs for the telecommunications controllers, key S.F. '2. The CRT will now display:

```
TELCOM.            DISK CATALOG
TO LOAD AND RUN, PRESS S.F. KEY CORRESPONDING TO CATEGORY.

SF' 1 FOR 2207 SELF TEST          SF' 2 FOR 2207 W/TTY TEST
SF '3 FOR 2227 TEST               SF' 4 FOR 2228 DIAGNOSTIC
SF '5 FOR 8K 2227B/28/28 TEST     SF' 6 FOR 16K 2227B/28/28B TEST
SF '7 FOR 27B/28/28B TTY EMUL.    SF' 31 FOR SYSTEM MENU
```

The telecommunication diagnostics menu is now loaded. Only special functions 4-7 relate to diagnostics for the Model 2227B, 2228, or 2228B communications controllers.

The diagnostics for the individual controllers are now accessed via the indicated special function keys. They are:

S.F.'4 = This key loads the synchronous communications diagnostics program for the model 2228 communications controller.

S.F.'5 = This key loads the 8K version of the asynchronous communications diagnostics for the following controllers:

2227B
2228
2228B

(This version only requires 8K of 2200 CPU memory.)

S.F.'6 = This key loads the 16K version of the asynchronous communications diagnostics for the following controllers:

2227B
2228
2228B

This version requires at least 16K of 2200 CPU memory.

S.F.'7 = This key loads the Teletype emulator program "27B*TTY" for any of the following controllers:

2227B
2228
2228B

The operating instructions for this program are in Section 3.1. This program is included as an aid in performing the on-line diagnostics (refer to Section 4.2).

2228 DIAGNOSTICS (S.F.'4):

Key S.F. '4. The CRT will display the menu:

```
   2200 HARDWARE DIAGNOSTIC - 2228--------------------------
 '0 RESET 2228                    '1 START TC DIAGNOSTIC
 '2 INITIALIZE RAM                '3 INTERNAL RAM TEST
 '4 LOAD/STORE RAM TEST           '15 PROGRAM MENU
'31 SYSTEM MENU
```

1. LOAD/STORE RAM TEST

This test allows the 2200 to write and then read the 2228 RAM. Any RAM address failure will be displayed on the CRT along with bit(s) being dropped or picked up. To run this test, proceed as follows:

a) Key S.F.'0 to reset the 2228.
b) Key S.F.'2 to initialize the 2228 RAM (time 10 sec.)
c) Key S.F.'4 for LOAD/STORE RAM test.
d) CRT will display "TEST RAM--RANDOM = 1?__", input "1", EXECUTE from the keyboard if a random data pattern is desired. Otherwise, key EXECUTE from the keyboard. This allows you to write your own pattern. Enter the pattern when display shows "TEST PATTERN = __"
e) CRT will display "CYCLIC MEMORY = 1?__", input "1" if you desire to check the entire memory. Key EXECUTE from the keyboard if you want to test one memory location only. Enter the memory location when the CRT displays "START ADDRESS = 1000"

NOTE:

Valid addresses are from 101A to IFBD instead of 1000 to 1FFF as the other locations are reserved for programming purposes.

f) Key EXECUTE, test will continually loop back on itself until RESET is keyed from keyboard.

NOTE:

If the random test pattern is used, the data byte will randomly change with each test pass.

2. INTERNAL RAM TEST

In this test, the internal RAM test diagnostic program is loaded into 2228 RAM and the 8080 on the 2228 controller then controls the checking of its own memory. The 2200 acts only to display errors or passes. Any error will be displayed on the CRT with the location and bit(s) being dropped or picked up. To operate this test:

a) Key S.F.0 to reset the 2228.
b) Key S.F.3 to start the "INTERNAL RAM" test.

CRT will display:

```
INTERNAL 2228 RAM TEST
SENDING 2228 RESET
DIAGNOSTIC LOADED IN RAM
EACH PASS TAKES ABOUT 35 SECONDS
RESPONSE IS--00 DENOTES PASS
FF-ERROR LOCATION-PATTERN

00--LOOP COMPLETE= 1              ERRORS= 0
```

c) Each pass takes 35 seconds. To stop test from looping, key RESET from keyboard.

3. 2228 HARDWARE DIAGNOSTIC

This test checks out most of the hardware (except 8080) and displays any errors on the CRT. The hardware diagnostic program (file DIAG-01A) is loaded into the 2228 RAM and then the 8080 controls the testing of its hardware. The following sections of the hardware are checked and displayed on the CRT:

```
LOOP BACK CONNECTIONS
DATA SIGNAL AND SYNC
CLOCK
TRANSMIT/RECEIVE
INTERRUPT
```

To run this test:

a) Attach the test connector to the 2228 controller (refer to figure 4.1). Connect the clip (attached to the test connector) to the test point (TP1) on the 6724 (piggyback board). The location of the test point is left of the memory chips and near a group of resistors.
b) Key S.F.0 to reset the 2228.
c) Key S.F.1 for 2228 hardware diagnostic.
d) Display shows GOOD TRANSFER of diagnostic file DIAG-01A to 2228 RAM. If BAD TRANSFER occurs, reset the system and reload the program, and repeat steps b-c. CRT will display:

```
WAITING FOR RESPONSE FROM 2228
10 LOOP BACK CONNECTIONS
30 DATA SIGNALS AND SYNC
50 CLOCK
60 TRANSMIT/RECEIVE
70 INTERRUPT
FF T.C. TEST COMPLETE LOOP= 1 ERRORS=0
```

e) The diagnostic is now checking the hardware.

f) Each loop takes about 30 seconds. To stop test from looping, key RESET from keyboard.

8K 2227B/28/28B TEST (S.F.'5)

Key S.F.'5. The CRT will display the following menu:

```
          WANG SYSTEM 2200 8K TC CONTROLLER DIAGNOSTIC
KEY A NUMBER AND (EXEC) TO SELECT CONTROLLER TYPE
1 = 2227B
2 = 2228
3 = 2228B

KEY DESIRED OPTION?__
```

To select the diagnostics for the indicated TC controller boards, key the corresponding number (1-3) and (EXEC). The CRT will display:

```
          WANG SYSTEM DIAGNOSTIC FOR 2228B, 2227B, 2228
S.F. '1 = 1 BOARD ENTRY--LOOPBACK CONNECTION   ADDR.=01C
S.F. '14 = SHOW CSV
S.F. '15 = SHOW CCV

STOP KEY DESIRED START-UP
```

NOTE:

For the Model 2228 Controller only, before this men is displayed, the CRT will display:

```
RESET CONTROLLER
LOADING 2228 MICROCODE WITH FILE = T27D010D
LOAD MICRO CODE INTO CPU
WRITE MICRO CODE TO CONTROLLER
MICROCODE LOADED
LOAD PROGRAM T27D010B
```

This indicates that the 2228 controller has been successfully loaded with the microcode date file that is needed to emulate asynchronous communications.

1) MEMORY/LOOPBACK TEST (S.F.'1)

This test is comprised of a memory and loopback test for a single controller board with the device address switches set to Hex 1C. The loopback connector of figure 4.2 must be used. For the Model 2228 controller only, the loopback connector of either figure 4.1 or figure 4.2 can be used.

A new features of the diagnostics program is the ability of the program to check the PROM revision level in the controller (with the exception of the Model 2228) before it is tested. If the version of the PROM is not the current revision, the program will stop and display on the CRT:

```
DIAGNOSTIC IS FOR PROM REVISION  = (REQUIRED REVISION LEVEL)
```

CONTROLLER BOARD IS SET WITH PROM = (actual revision level)

STOP CORRECT CONDITION

This feature of the program will alert the Customer Engineer that the PROM must be updated before installing the controller in a customer's system. Refer to section 2.2 for the current PROM revision level.

To initiate this test, key S.F.'1. The CRT will display the prompt:

MEMORY TEST---ENTER NUMBER CORRESPONDING TO DESIRED PATTERN

(1) RANDOM (2) CYCLIC ?__

Depending upon which pattern is selected for the memory test only, the 2200 will write to the controller's RAM the hex pattern selected to every memory location indicated on the CRT. The 2200 then reads the data back and verifies its validity. If the random pattern was selected, then a different random character will be generated for each memory test pass and if the cyclic pattern was selected, then consecutive data values beginning with hex 00 will be automatically generated. The CRT will display prompts related to any write/read/compare memory errors encountered, and will also display a count of these errors.

The hardware loopback test is similar to the memory test except that the Programmable Communication Interface Chip (8251) on the controller board is written and read instead of the memory. The 2200 CPU does a write/read/compare test with the 8251 which is programmed to transmit/receive data in the asynchronous mode using the following parameters: 1 stop-bit, 300 baud, full duplex mode, break disabled, 8 data bits, and even parity. The loopback connector loops the transmitted data back into the controller's receiver and also simulates the control signals that a modem usually provides to the controller. During this test, a total of 400 characters are transmitted and received. The test pattern consists of consecutive cyclic data values beginning with hex 01. The CRT will display error prompts related to any receive (parity/framming/receive buffer overrun) or loopback (data compare) errors and will also display a count time of these errors. This test will loop back on itself unless the RESET button is activated.

2) SHOW CSV (S.F.'14)

This key allows the operator at anytime to display the Communications Status Vector (CSV) on the CRT. When activated, the CRT will display:

```
CSV  (COMMUNICATIONS STATUS VECTOR)=
.1.2.3.4.5.6.7 CHARACTER POSITION

XXXXXXXXXXXXXX
```

Refer to Table 4.1 for the explanation of each byte of the CSV.

3) SHOW CCV (S.F.'15)

This key allows the operator at anytime to check the Communications Control Vector (C.C.V.). When activated, the CRT will display:

```
CCV (COMMUNICATIONS CONTROL VECTOR)=
.................1.1.1.1.1.1.1.1.1.1.2  CHARACTER
.1.2.3.4.5.6.7.8.9.0.1.2.3.4.5.6.7.8.9.0  POSITION
XXXXXXXXXXXXXXXXXXXXXXXXXXXXXXXXXXXXXXXX
```

Refer to Table 4.2 for the explanation of each byte of the CCV.

16K 2227B/28/28B TEST

Key S.F.'6. The CRT will display:

```
        WANG SYSTEM 2200 16K TC CONTROLLER DIAGNOSTIC
KEY  A NUMBER AND  (EXEC) TO SELECT CONTROLLER TYPE
 1 = 2227B
 2 = 2228
 3 = 2228B


 KEY DESIRED OPTION?__
```

To select the diagnostics for the indicated TC Controller Boards, key the corresponding number (1-3). The CRT will display:

```
      WANG SYSTEM DIAGNOSTIC FOR 16K, 2227B, 2228, 2228B
S.F. '1 = 1 BOARD ENTRY--LOOPBACK CONNECTION  ADDR.=01C
S.F. '2 = 2 BOARD ENTRY--CABLED TOGETHER  ADDR.=1C AND IF
S.F. '3 = 2 BOARD TEST (VARYING BAUD RATE)
S.F. '13 = BREAK TEST
S.F. '14 = SHOW CSV
S.F. '15 = SHOW CCV

STOP KEY DESIRED START-UP
:__
```

NOTE:

For the Model 2228 controller only, before this menu is displayed, the CRT display:

```
RESET CONTROLLER
LOADING 2228 MICROCODE WITH FILE =T27D010D
LOAD MICRO CODE INTO CPU
WRITE MICRO CODE TO CONTROLLER
MICROCODE LOADED
LOAD PROGRAM T27D030B
```

This indicates that the 2228 controller has been successfully loaded with the microcode data file that is needed to emulate asynchronous communications.

The following operating instructions are valid for all the TC controllers with the following exceptions: for the Model 2228 communications controller, S.F.'2, 3, and 13 do not apply since they are all tests for two controller boards and the program for the Model 2228 does not have the provisions to load a second controller with the microcode data file.

An added feature of this diagnostics program is the ability of the program to check the PROM revision level in the controller before (with the exception of the 2228) any memory test is run. If the version of the PROM is not the current revision, the program will stop and display on the CRT:

```
DIAGNOSTIC IS FOR PROM REVISION = (required revision level)
CONTROLLER BOARD IS SET WITH PROM = (actual revision level)

STOP CORRECT CONDITION
```

This feature of the program will alert the Customer Engineer that the PROM must be updated before installing the controller in a customer's system.

1) MEMORY/LOOPBACK TEST - ONE CONTROLLER (S.F.'1)

This test is comprised of a memory and loopback test for a single controller board with the device address switches set to Hex 1C. The loopback connector of figure 4.2 must be used. For the Model 2228 controller only, the loopback connector of either figure 4.1 or figure 4.2 can be used.

To initiate this test, key S.F.'1. The CRT will display the prompt:

```
MEMORY TEST---ENTER NUMBER CORRESPONDING TO DESIRED PATTERN

(0)  INPUT FROM CRT      (1)  RANDOM      (2)  CYCLIC
```

Depending upon which pattern is selected for the memory test only, the 2200 will write to the controller's RAM the hex pattern selected to every memory location indicated on the CRT. The 2200 then reads the data back and verifies its validity. If the "INPUT FROM CRT" was selected, the CRT will prompt:

ENTER RAM TEST PATTERN AND (EXEC)

The operator can enter the desired test character and key (EXEC) to start the test. This pattern will remain the same for each test pass unless a new value is entered.

If the random pattern was selected, then a different random character will be generated for each memory test pass, and if the cyclic pattern was selected, then consecutive data values beginning with hex 00 will be automatically generated. The CRT will display prompts related to any write/read/compare memory errors encountered and will also display a count of these errors.

The hardware loopback test is similar to the memory test except that the Programmable Communication Interface Chip (8251) on the controller board is written and ready instead of the memory. The 2200 CPU does a write/read/compare test with the 8251 which is programmed to transmit/receive data in the asynchronous mode using the following parameters: 1 stop-bit, 300 baud, full duplex mode, break disabled, 8 data bits, and even parity.

The loopback connector loops the transmitted data back into the controller's receiver and also simulates the control signals that a modem usually provides to the controller. During this test, a total of 400 characters are transmitted and received. The test pattern consists of consectutive cyclic data values beginning with hex 01. The CRT will display error prompts related to any receive (parity/framing/receive buffer overrun) or loopback (data compare) errors and will also display a count time of these errors. This test will loop back on itself unless the RESET button is activated.

2) MEMORY/LOOPBACK TEST - TWO CONTROLLERS (S.F.'2)

This test is similar to the previous test except that two communications controllers, with the exception of the Model 2228, are required instead of one. One controller must be set to hex 1C and the other to hex 1F. The two controllers must be cabled together via a 2227-N Null Modem or a similar arrangement.

NOTE:

Check that no other devices plugged into the 2200 CPU are set to Hex 1F or this test will fail intermittently.

The sequence of tests is:

a) memory test of controller 1C
b) memory test of controller 1F
c) loopback test, controller 1C transmits data to controller 1F
d) end-of-record test, controller 1C transmits data to controller IF (checks that EOR counter in CSV decrements to 0)
e) loopback test, controller 1F transmits data to controller 1C
f) end-of-record test, controller 1F transmit data to controller 1C
g) break test, controller 1C transmits break to controller 1C
h) break test, controller IF transmits break to controller 1C

The CRT will display error prompts related to any of the following errors:

RAM WRITE
RAM READ
RAM COMPARE
LOOPBACK RECEIVE (PARITY/FRAMMING/RECEIVE BUFFER OVERRUN)
LOOPBACK COMPARE
BREAK NOT DETECTED
BREAK NOT CLEARED
EOR NOT CLEAR

A count of these errors will also be displayed on the CRT.

This test will loop back on itself unless the RESET button is activated.

3) VARYING BAUD RATE TEST - TWO CONTROLLERS (S.F.'3)

This key activates a loopback test with varying baud rate between two controllers (except Model 2228) cabled together with a 2227-N Null Modem and device address switches set to hex 1C and hex 1F. When accessed, the CRT will display the following prompt:

LOOPBACK WITH VARYING BAUD RATE

LOW BAUD RATE 0 - 15?__

Key in the number corresponding to the low baud rate desired. The values are:

0 = 50 bits per second
1 = 75 bps
2 = 100 bps
3 = 110 bps
4 = 134.5 bps
5 = 150 bps
6 = 200 bps
7 = 300 bps
8 = 600 bps
9 = 1200 bps
10 = 1800 bps
11 = 2400 bps
12 = 3600 bps
13 = 4800 bps
14 = 7200 bps
15 = 9600 bps

After the number is entered, the loopback test will begin at the low baud rate first with controller 1C transmitting to controller 1F and then with controller 1F transmitting to controller 1C. For the next test pass, the baud rate will increase to the next higher rate until it reaches 9600 bps and the program will reset to the low baud rate previously selected. This test will loop back on itself until the RESET button is activated.

4) BREAK TEST - TWO CONTROLLERS (S.F.'13)

This key activates the break test between two controllers cabled together with a 2227-N Null Modem and device address switches set to hex 1C and hex 1F. In this test, controller 1C transmits a break signal to controller 1F and then controller 1F will transmit a break signal to controller 1C. This test will loop back on itself unless the RESET button is activated.

5) SHOW CSV (S.F.'14)

The CRT will display the Communications Status Vector (CSV) when this key is activated. An example display is:

```
CSV  (COMMUNICATIONS STATUS VECTOR)=
.1.2.3.4.5.6.7  CHARACTER POSITION

20202020202020

.B.M.E.C.E.T.L   MEANING
.R.O.R.O.N.I.E
.E.D.R.U.D.M.F
.A.E.O.N.S.E.T
.K.M.R.T...R..
```

Refer to Table 4.1 for an explanation of each byte of the CSV.

6) SHOW CCV (S.F.'15)

The CRT will display the Communications Control Vector (CCV) when this key is activated. For example:

```
CCV  (COMMUNICATIONS CONTROL VECTOR)=
.................1.1.1.1.1.1.1.1.1.1.2  CHARACTER
.1.2.3.4.5.6.7.8.9.0.1.2.3.4.5.6.7.8.9.0  POSITION

170231AA14000000120C00000000000000000000  VALUE

SBMBBP.E.T.E.U.D.B.B.  MEANING
TAORIA.R.I.O.P.W.R.R.
OUDETR.R.M.R. .N.K.K.
PDEASI.C.E.  C.C. . .
   K T H.O.F H.H.S.D.
     Y A.U.L A.A.N.E.
       R.T.G R.R.D.T.
1 STOP BITS--300 BAUD--HALF DUPLEX MODE--BRK ON 2ND
BREAK--8 DATA BITS--EVEN PARITY
```

Refer to Table 4.2 for an explanation of each byte of the CCV.

COMMUNICATIONS STATUS VECTOR INFORMATION
Table 4.1

Byte	Bit*	Meaning
1	1	1 = Break signal received
2	1	1 = Received Line Signal Detector On
	2	1 = Sec. Rec'd Line Sig. Det. On
	3	1 = Data Set Ready modem signal On
3	1	1 = Receive parity error detected
	2	1 = Receive buffer overrun error detected
	3	1 = Receive framing error detected
4	all	Binary count of the number of characters in the receive buffer.
5	all	Binary count of the number of end-of-record characters in the receive buffer.
6	all	Received data timeout countdown.
7	all	Binary count of the number of characters in the transmit buffer.

*Bit positions in each byte are numbered from 1 (low-order) to 8 (high order).

Refer to the Buffered Asychronous Communications Controller User Manual for more information.

Valid Communications Control Vector Specifications
Table 4.2

For more information, refer to the Buffered Asynchronous Communications Controller User Manual.

Byte*	High-order Hexdigit	Low-order Hexdigit
1	0 = Illegal value 1 = 1 Stop bit 2 = 1.5 Stop bits 3 = 2 Stop bits	0 = 50 bits per second 1 = 75 bps 2 = 100 bps 3 = 110 bps 4 = 134.5 bps 5 = 150 bps 6 = 200 bps 7 = 300 bps 8 = 600 bps 9 = 1200 bps A = 1800 bps B = 2400 bps C = 3600 bps D = 4800 bps E = 7200 bps F = 9600 bps
2	0 = Half duplex 1 = Half duplex with deletion of received null characters 2 = Full duplex 3 = Full duplex with deletion of received null characters	0 = Break disabled 1 = Break enabled on transmit/receive 2 = Break enabled on Secondary Req. to send & Sec. Line Sig. Det. 3 = Same as 2 with inverted polarity
3	0 = 5 Data bits per character 1 = 6 Data bits 2 = 7 Data bits 3 = 8 Data bits	0 = No parity 1 = Even parity 2 = No parity 3 = Odd parity

Valid Communications Control Vector Specifications (Continued)

Byte	High and Low Order Hexdigits*	Remarks
4	xy = Substitute character for parity/framing errors.	Each received character having a parity or framing error is replaced by the designated character (replacement occurs prior to code translation if translation tables are being used).
5	xy = Timeout Interval in units of 0.1 seconds.	The specification in hexadecimal notation represents the timeout interval in units of 0.1 seconds, e.g., $(24)_{16} = (36)_{10}$ specifies an interval of 3.6 seconds.
6	00 = Disable end-of-record detection. 01 = Enable end-of-record detection.	If enabled, the end-of-record characters must be defined via the receive-code translation table by setting the high-order bit to 1 for each code corresponding to an incoming end-of-record character.
7	xy = Upshift Character.	To enable shift code insertion/deletion, the high-order hexdigit in byte 3 of the control vector must be 0 or 1 (i.e., the number of data bits per character must be 5 or 6). Also, the transmit-code translation table must identify all down-shifted, upshifted, and "don't care" characters by setting the two high-order bits to 00, 01, and 10 or 11. The receive-code translation table must allow for the controller's automatic setting (before translation) of the high-order bit to 1 for all incoming upshifted characters.
8	xy = Downshift character.	
9	xy = Break signal transmit interval in units of 10 ms.	To enable break signal transmission/ detection, the low-order hexdigit in byte 2 of the control vector must specify the polarity and the modem signals. If bytes 9 and 10 are both HEX(10), the low-order hexdigit in byte 2 should be 0. The byte 9 and 10 specifications in hexadecimal notation represent break signal transmit and receive intervals in units of 10 milliseconds, e.g., $(12)_{16} = (18)_{10}$ specifies a 180 ms interval.
10	xy = Break signal detection interval in units of 10 ms.	
11	xy = Special Character.	Up to four special characters can be defined in bytes 11, 13, 15 and 17. The delay associated with a particular character is specified in the following byte, in hexadecimal notation representing the interval in units of 10 milliseconds. The maximum delay, HEX(FF), is 2.5 seconds. During transmission, the controller automatically delays for the specified time following the transmission of one of the specified characters. If a transmit-code translation table is used, each special character must be defined with respect to its code after translation. If the automatic transmission delay capability is not desired, bytes 11 through 18 should each be set to HEX(00).
12	00 = No transmission dealy. xy = Transmission delay in units of 10 ms.	
13	Same as byte 11.	
14	Same as byte 12.	
15	Same as byte 11.	
16	Same as byte 11.	
17	Same as byte 11.	
18	Same as byte 12.	

*x and y each denote any hexdigit (0 through 9, A through F). If a feature is not desired, the byte positions associated with the feature can be ignored if the communications control vector has been initiated to binary zero.

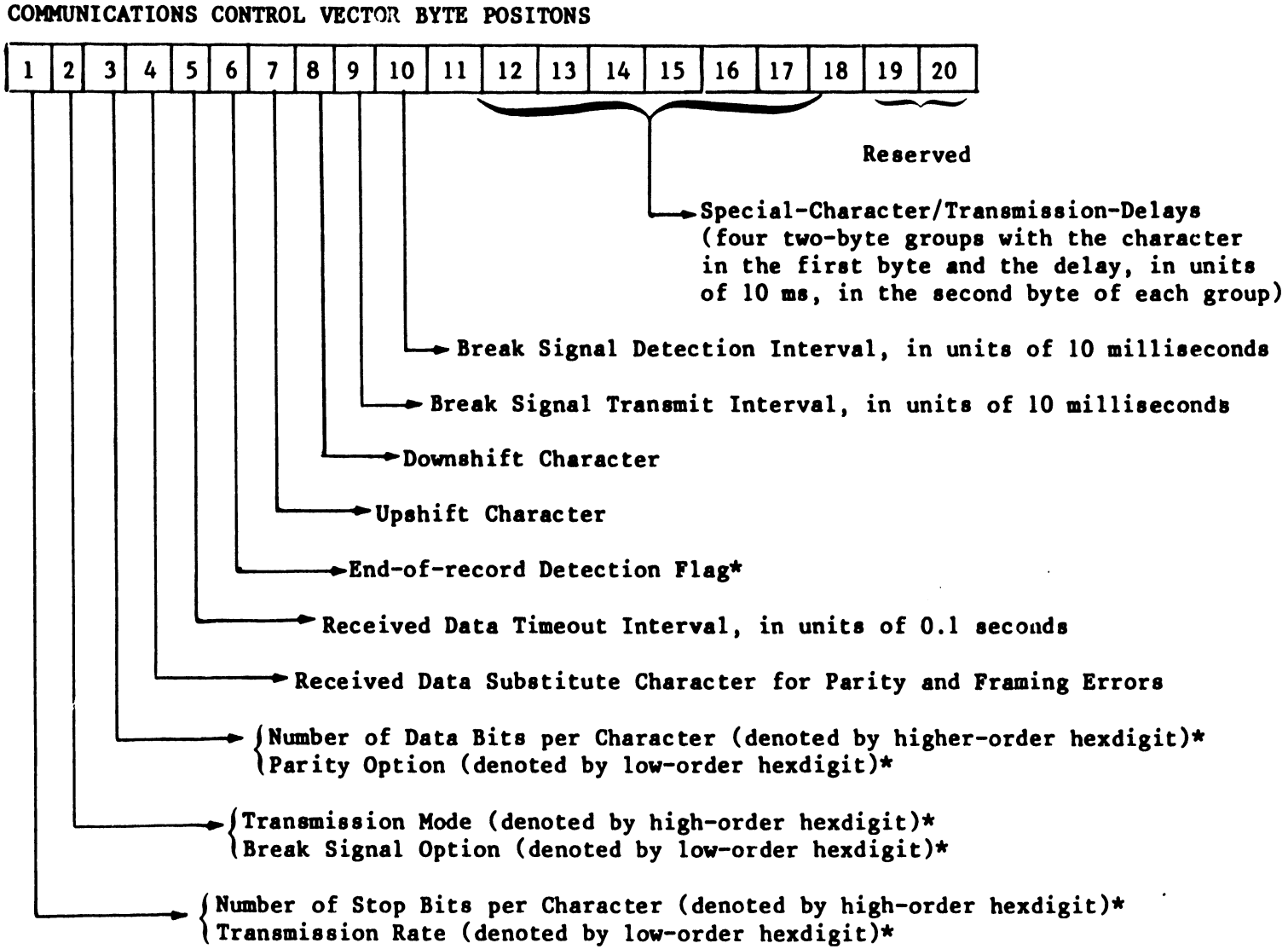

*See Table 4.2

Figure 4.3 Communications Control Vector Format

4.1.3 PCS/2200 PERIPHERAL DIAGNOSTIC TAPE

OPERATING PROCEDURE

The telecommunication diagnostic programs for either a PCS-I or a cassette-based 2200 system are available on a single cassette tape labeled PCS/200 PERIPHERAL DIAGNOSTIC TAPE (W.L. #701-0414A). These diagnostics are for either a model 2227B or Option 62 communications controller. The loopback connector of figure 4.2 must be plugged into the female RS-232-C connector which is wired to the communications controller. For the Model 2227B, this connector is located on the top of the controller mounting bracket and for the Model Option 62, it is located on the back panel of the PCS-I unit. The address on any of the controllers must be set at HEX 1C to load and run the diagnostic programs.

To load the diagnostic programs:

1) Key LOAD, RETURN (EXEC)
2) Key RUN, RETURN (EXEC)

The CRT will display prompts that will allow the operator to select and run the telecommunications diagnostic programs.

NOTE:

The cassette version of the telecommunication diagnostic programs is in the process of being updated to the level of the programs on the 2200 PERIPHERAL DIAGNOSTIC DISKETTE (refer to Section 4.1.2). As soon as they are updated, the operating procedure of these programs will be similar to the procedure in Section 4.1.2. Due to the physical restraint of the PCS-I chasis to accept only one option board, only the single board tests are applicable.

4.1.4 PCS-II PERIPHERAL DIAGNOSTIC MINIDISKETTE

OPERATING PROCEDURE

The telecommunication diagnostic programs for a PCS-II are available on a single minidiskette labeled PCS-II PERIPHERAL DIANOSTIC MINIDISKETTE (W.L. #701-8001). These diagnostics are for a Model Option 62B communications controller. The loopback connector of Figure 4.2 must be plugged into the female RS-232-C connector which is wired to the communications controller. For the Model Option 62, this connector is located on the back panel of the PCS-II unit. The address on any of the controllers must be set to HEX 1C to load and run the diagnostic programs.

To load the diagnostic programs:

1) Key LOAD, DCF "START", RETURN (EXEC)
2) Key RUN, RETURN (EXEC)

The CRT will display prompts that will allow the operator to select and run the telecommunications diagnostic programs.

NOTE:

The minidiskette version of the telecommunication diagnostic programs is in the process of being updated to the level of the programs on the 2200 PERIPHERAL DIAGNOSTIC DISKETTE (refer to Section 4.1.2). As soon as they are updated, the operating procedure of these programs will be similar to the procedure in Section 4.1.2. Due to the physical restraint of the PCS-II chasis to accept only one option board, only the single board tests are applicable.

4.2 ON-LINE DIAGNOSTICS

The suggested method of on-line system checkout (when applicable) for any of the communication controller boards is a telephone hook-up with WYLBUR (IBM 370/158) at the Wang Data Center in Burlington, MA. Basically WYLBUR is an interactive type host computer. WYLBUR is programmed to communicate using either Teletype or IBM 2741 protocol; therefore, either emulation program may be used. (Refer to Section 3) The required parameters are:

Teletype - NO ECHO
EVEN PARITY
7 DATA BITS

2741 - CORRESPONDENCE CODE OR BCD CODE
134.5 BAUD

The other parameters are optional. These parameters must be set and the emulator program loaded before going on-line with WYLBUR.

WYLBUR's telephone numbers are:

0-300 baud - (617) 272-8120 103 Type Modem
1200 baud - (617) 272-7420 202 Type Modem

TEST:

1) Dial WYLBUR. (See above telephone numbers.)
2a) If using a model 103 or 202 modem (or 103 or 202 equivalent), wait for carrier tone and then press "data" button.
b) If using acoustic coupler, wait for high pitch sound from telephone and place receiver down into cups located on coupler. A light will illuminate on coupler when carrier tone is established. If not, redial WYLBUR.

NOTE:

The coupler should be set for full duplex operaton.
EXAMPLE: On OMNITECH coupler, both switches located at rear of coupler must be out.

3) Enter the word below and then RETURN(EXEC).

"2741" if 2741 emulator program is used
or
"GTWX" if 0-300 baud Teletype emulator program is used
or
"↑TWX" if 1200 baud Teletype emulator program is used.

4) The computer will respond with "Wang Data Center." If this does not occur, then hang up and re-dial WYLBUR.
5) The computer will again respond with "TERMINAL?" ENTER "W33" then RETURN(EXEC).
6) The computer will respond with "INITIALS?" ENTER "FES" then RETURN(EXEC).
7) The computer will respond with "ACCOUNT?" ENTER "FS" then RETURN(EXEC).
8) The computer will respond with "KEYWORD?" Enter keyword (obtained from Customer Engineering Home Office) then RETURN(EXEC).
9) The computer will respond with "COMMAND?".

You are signed on to the computer system. If you want to play out the program which is already in the computer, follow procedure in steps 10-14.

10) ENTER "USE 2200 ON W33002" the RETURN(EXEC).
11) The computer response "COMMAND?" ENTER "LIST UNN", then RETURN(EXEC).
12) The computer will then send the test and it will be displayed on CRT:

    1. THIS IS A 2200 T. C. TEST
    2. THE 2200 CAN OPERATE AT 110, 150, 300, 600, and 1200 BAUD RATE DEPENDING ON MODEM.
    3. THE BELL 103A OR COMPATIBLE CAN OPERATE UP TO 300 BAUD WHILE BELL 202C UP TO 1200 BAUD
    4. THE 2200 SYSTEM CAN BE SELECTED FOR 5 TO 8 DATA BITS PER CHARACTER.
    5. THE EVEN OR ODD OR NO PARITY IS SWITCH SELECTABLE. ALSO 1 OR 2 STOP BITS ARE SWITCH SELECTED.
    6. THE 2200 T. C. USES HALF DUPLEX MODE WHICH MEANS IT CAN NOT RECEIVE AND TRANSMIT AT THE SAME TIME.
    7. YOU MUST HAVE RECEIVED SEVEN LINES AND THIS IS THE END OF TRANSMISSION.

13) When the test is completed the computer will respond with "COMMAND?" ENTER "CLR ACT", RETURN(EXEC).
14) The computer will respond with "COMMAND?"
15) ENTER "SIGNOFF", then RETURN(EXEC).
16) The computer will respond with "OK TO CLEAR?" (Optional)
17) ENTER "CLEAR", then RETURN(EXEC).
18) The computer will give statistics on how long the terminal has been signed on, etc.
19) The computer will send "END OF SESSION"; this concludes the test.

4.3 LINE MONITOR TESTER

4.3.1 INTRODUCTION

The telecommunications line monitor tester does not test any hardware or software by itself. It is designed to display the Hex Code responses transmitted or received from the local and remote terminal on a CRT. In most of the installation problems it is imperative to know why the system is not signed on to the remote terminal. It could be that SIGN-ON data is not entered correctly or the remote terminal is dead. The person using this tester must be familiar with particular communications protocol being used and by analyzing responses from the remote terminal he should be able to determine the problem.

4.3.2 DESCRIPTION

The line monitor tester was designed primarily to assist on installations. The tester uses 8 LEDs to indicate modem status; it also interfaces the data bus to a remote CRT allowing a visual display of data transmitted and data received. This tester has two modes of operation:

1. 2200 to Modem-In this mode the test unit is inserted in the communications line and allows monitoring of the transmission line and indicates modem status conditions. In this mode the 2200 is communicating with either a terminal or a computer, through a MODEM which provides all signals and status conditions necessary for proper operation.

2. 2200 to 2200 - In this mode the test unit is again inserted in the communications line to perform the same function as mentioned in #1. In this mode the 2200 is communicating with another 2200 through a direct cable connection. Thus, all clocks are self-generated and status is maintained by the tester. In essence, the tester is acting as a 2227-N null modem. The advantage of having this mode is primarily in insolating problems by elimination of system components (by eliminating the modem it can be determined if the communications controller is working properly). It also enables the system to be tested at a local level to insure that the controller boards are operational.

4.3.3 OPERATION

The tester requires AC power (115V 50/60 Hz or 230V 50 Hz). It also requires the following materials to operate properly:

(1) TC cable.
(2) 1 spare CRT controller.
(3) 1 spare CRT (if item 3 is not available the CRT in the system can be used).

1. Controls - There are four control switches on the tester. They are:

   (a) Power On/Off - controls AC power.
   (b) Reset - This returns the cursor to the upper left and clears the screen of the monitor CRT.
   (c) Mode Selection - This selects either 2200 to 2200 mode or Modem to 2200 mode.
   (d) Baud Selection - This selects the bit transmission rate (2400 baud or 4800 baud). It is operational only in the 2200 to 2200 mode. (Does not apply to asynchronous communications controllers.)

2. Interconnections (all connections are made with power off).

   (a) Plug in the CRT controller board and connect the spare CRT to the controller board. (Refer to Figure 4.3 and 4.4.)

   (b) 2200 to Modem - In this mode of operation the cable labeled 2228 #1 connects to the communications controller board; connect the cable supplied with the system to the modem, connect the other end of this cable to the tester connector labeled MODEM. Now connect the ribbon cable to the following PC board through the 16 pin IC socket provided on that PC board:

2227B	6730
2228	6724
2228B	7224
Option 62	7153
Option 62B	7153-1

   Apply power to the system, the CRT and the test unit. The tester should indicate modem status through the LEDs and when transmission begins, all information transmitted or received can be observed on the CRT in hexidecimal form (see figure 4.5 to decode the transmission).

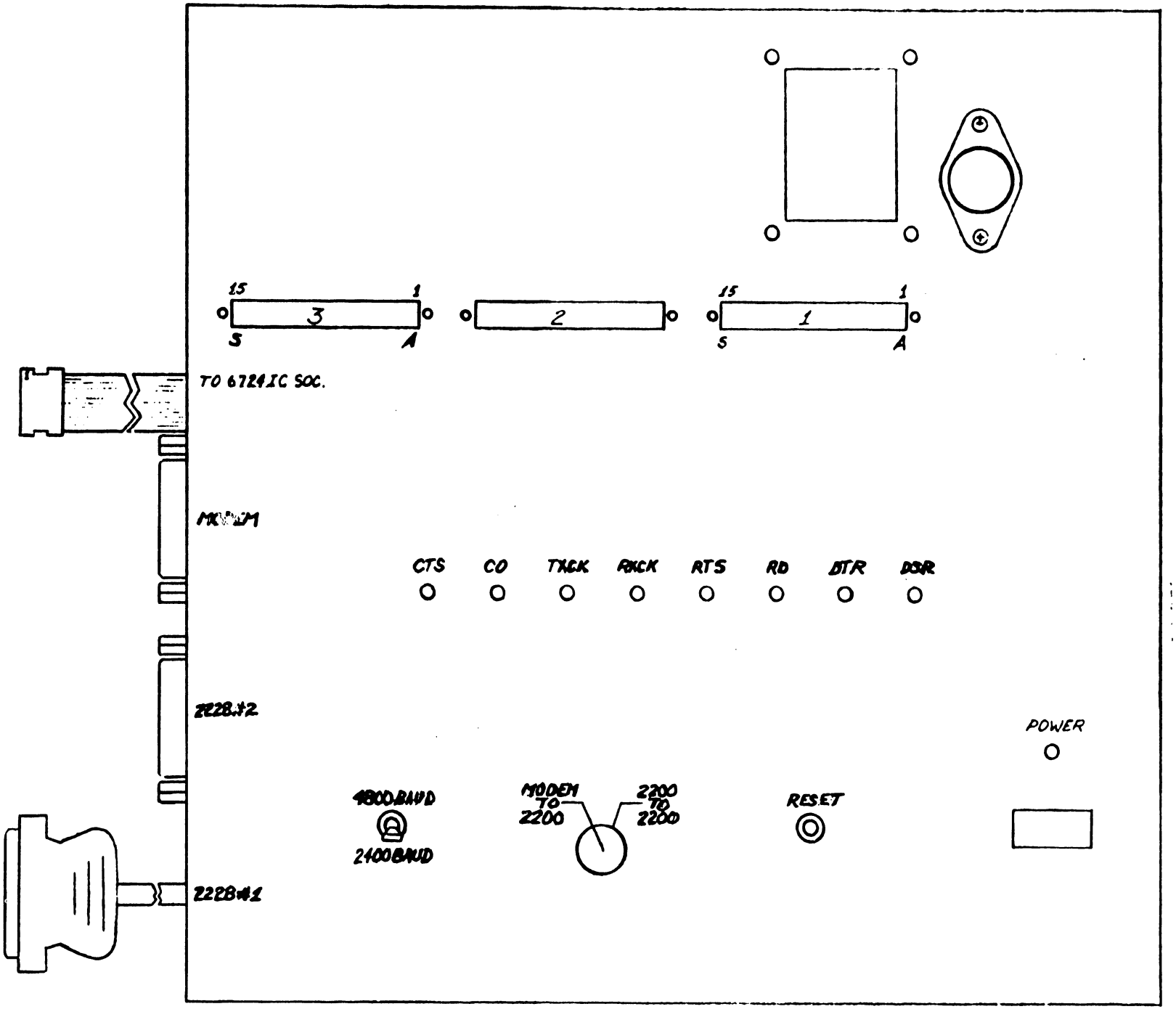

LINE MONITOR TESTER

FIGURE 4.3

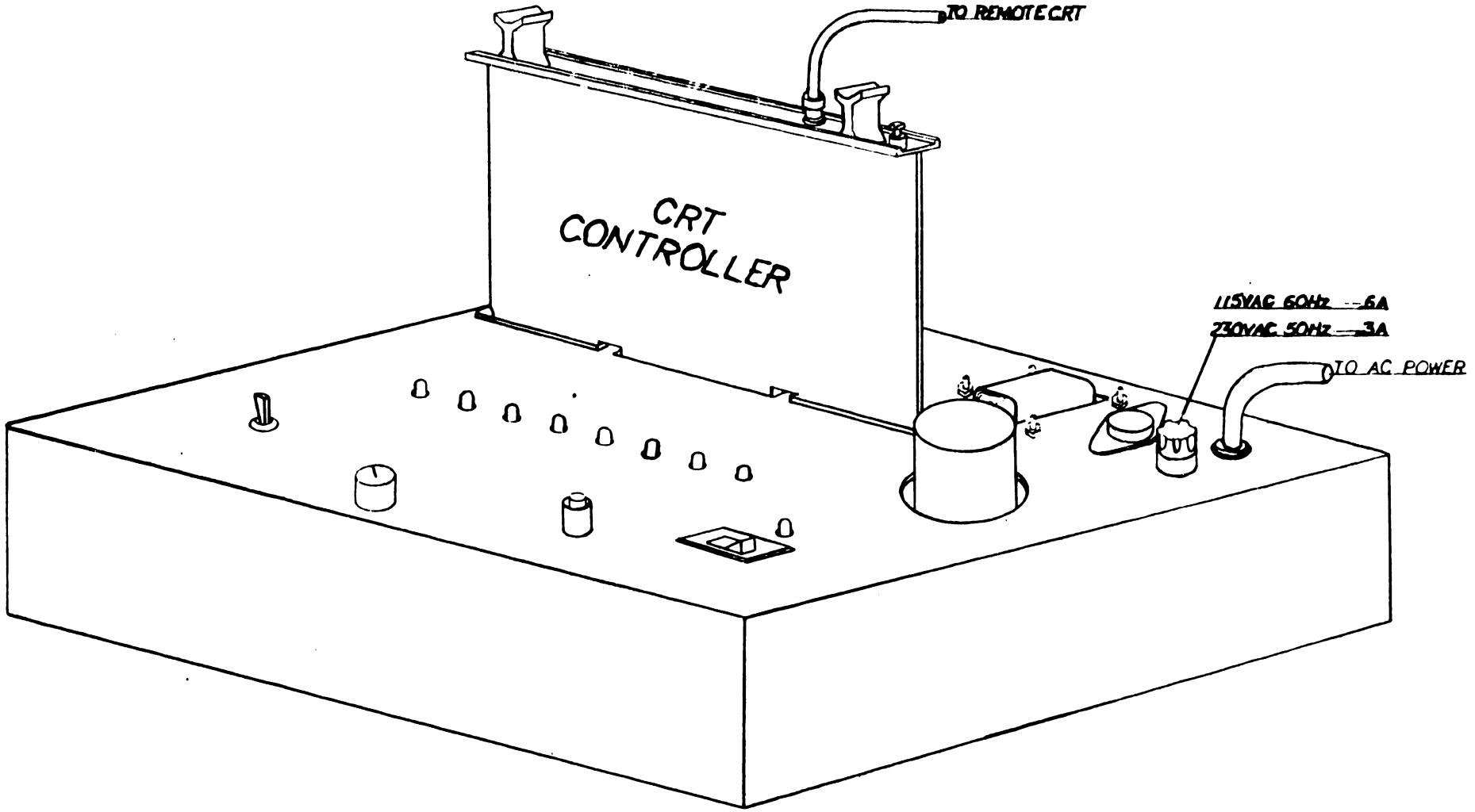

LINE MONITOR TESTER

FIGURE 4.4

(c) 2200 to 2200 - The cable labeled 2228 #1 connects to a communications controller board in one of the available systems. The second cable now connects to a second system through another communications controller and plugs into the tester connector labeled 2228 #2. All other connections remain the same. Apply power; operation is the same as through a modem. The one difference in this mode is that the baud select switch is operational, thus, a transmission rate of either 2400 or 4800 baud is available for a bi-sync communications controller.

NOTE:

The address for the CRT controller board remains 005.

3. A) Typical bi-sync message displayed on the CRT.

- *OD 32 32 32 32 2D FF - System sending a inquiry to the remote terminal.

- **06 32 32 10 70 FF - Remote terminal acknowledges system inquiry.

- OD 32 32 32 32 02-DATA-03 - - FF - Data transmitted to a remote terminal.

- 06 32 32 10 61 FF - Remote terminal acknowledges systems transmission.

-OD 32 32 32 32 37 FF - Systems sends end of transmission code to remote terminal.

*OD - identifies message/data out of 2200 to which monitor system is connected.

**06 - identifies message/data coming in from remote system to the 2200 to which monitor systems is connected.

B) Typical asynchronous message displayed on the CRT.

.22/21.23/22

The data transmitted is preceded by a period (.) on the monitor CRT while data received is preceded by a slash (/).

Figure 4.5
CHARACTER CONVERSION

DATA LINK CONTROL CHARACTER	EBCDIC	HEX	USASCII	HEX
ENQ	ENQ	2D	ENQ	05
ETB	EOB	26	ETB	17
ACK 0	DLE "70"	1070	DLE0	1030
ACK 1	DLE /	1061	DLE1	1031
ITB	IUS	1F	US	1F
WACK	DLE,	106B	DLE;	103B
RVI	DLE@	107C	DLE <	103C
TTD	STX ENQ	022D	STX ENQ	0205
STX	STX	02	STX	02
EOT	EOT	37	EOT	04
SYN	SYN	32	SYN	16
ETX	ETX	03	ETX	03
NAK	NAK	3D	NAK	15
EM	EM	19	EM	19
HT	HT	05	HT	09

4.3.4 HOW TO TROUBLESHOOT THE SYSTEM USING THE LINE MONITOR

1. When system is signed-on to the remote end, watch for response from remote end to the inquiry message. If no reply, then remote end either does not recognize the message because of poor line connection, marginal modem at either end or bad modem. Try dialing again a few more times.

2. Check the modem status when transmitting. RTS and CTS must be on when transmitting. DTR and DSR must be on after telephone connection is established and must remain on during entire period of transmission.

   (a) When receiving CO light must be ON.

   (b) T_xC light must be on all the time (for bi-sync communications only).

   (c) R_xC light must be on during receiving data (for bi-sync communications only).

4.4 GENERAL SYSTEM TROUBLESHOOTING HINTS

4.4.1 INTRODUCTION

Troubleshooting the telecommunications system is a very complex task. There are so many factors and components involved, such as telephone lines, modems, host computers. Any one of these can cause a problem. The problem is not always a hardware failure in any of the components. More than 70% of the problems encountered in the telecommunications system at installation time are not sufficient information for sign-on procedure, wrong options on the modem and poor knowledge of operating procedure.

4.4.2 TROUBLESHOOTING CHECKLIST

The first thing any service representative should do is to check the installation items as stated below.

a) Check the entire 2200 system by running all possible diagnostics available and checking all voltages.

b) Check the telecommunications controller for correct address, visually inspect the controller card for any broken components, short etches, etc. Make sure the controller card is seated properly in I/O slot.

c) Run the off-line diagnostic. Most of the hardware functions are checked by the diagnostic.

d) Check the T.C. cable for any bad contacts. Do a continuity check on the cable from one end to another end and make sure all the required signal wires are connected on both ends of the cable.

e) Call the Telephone Data Service Center and have the modem checked. If possible be present when the modem service representative arrives and show him the problem.

f) Make sure the host computer can, in fact, support the Wang system. Sometimes salesmen know very little about the system they sell and could have sold the wrong systems.

g) Get in touch with data processing personnel at the host computer and discuss the sign-on procedure and explain the problem. Almost all of the sign-on type problems can be resolved this way. If you know anyone else using the same host computer or similar system, find out how he is using it.

h) Most important of all, try to get help from your Area office, program analyst, Home Office, or anyone you know who has a telecommunications background.

4.4.3 MODEM CONTROL SIGNALS CHECKOUT

If the modem is suspected of causing trouble, the following control signals can be checked using an oscilloscope. The modem must be in the data mode when checking the control signals.

1) Place the controller card on an extender so that you have access to modem signals on the RS-232 connector (25 pin Cannon connector).

2) Pins 1 and 7 are chassis and reference ground.

   Check for any noise on ground circuit.

3) Pin 2 TRANSMITTED DATA (TO data set).

   Signals on this circuit are generated by data terminal equipment. Check to see if terminal is transmitting data when in transit mode. The data terminal will not transmit data unless clear-to-send signal is ON (+3v) on pin 5, data terminal ready signal is ON (+3v) on pin 20 and data set terminal ready signal is ON (+3v) on pin 6.

4) Pin 3 RECEIVED DATA (FROM data set).

   Signals on this circuit are generated by receiving data set in response to data signals received from a remote data set. This circuit is always held in the MARK (-3v) when the received line signal detector (pin 8) is OFF (-3v).

5) Pin 4 REQUEST-TO-SEND (TO data set).

   Data terminal presents ON signal (+3v) on this circuit when terminal intends to transmit data. After turning this signal ON, data terminal must wait for ON condition to clear-to-send (pin 5) circuit before starting data transmission.

6) Pin 5 CLEAR-TO-SEND (FROM data set).

   Signal on this circuit is generated by data set to indicate whether or not data set is ready to transmit data. This circuit is turned ON (+3v) in response to ON signal on pin 4 delayed approximately 50 to 200 ms depending on type of modem and customer options selected.

7) Pin 6 DATA SET READY (FROM data set).

The ON condition (+3v) on this circuit indicates that data set is in DATA mode and is capable of receiving and transmitting data. The data terminal ready signal on pin 20 must be ON (+3v) during DATA mode. The OFF condition (-3v) indicates that data set is Talk or Test mode.

8) Pin 8 RECEIVED LINE SIGNAL DETECTOR (carrier) (FROM data set).

The ON condition (+3v) on this circuit indicates the presence of the data carrier signal above the receiver threshold for at least 47±3 milliseconds. This circuit is ON during receive mode and will turn OFF (-3v) and disable receiver when data terminal is in transmit mode or when request-to-send signal is turned ON.

9) Pin 15 TRANSMITTER SIGNAL ELEMENT TIMING (FROM data set).

The square wave signals on this circuit at 2000 HZ (for 2000 baud modem) or 2400 HZ (for 2400 baud modem) or 4800 HZ (for 4800 baud modem) are used to provide the data terminal equipment with signal element timing information for the transmitted data circuit. A timing signal will be present on this circuit at all times when power is one in the data set.

10) Pin 17 RECEIVER SIGNAL ELEMENT TIMING (FROM data set).

The square wave signal on this circuit at 2000 HZ (2000 baud modem) or 2400 HZ (2400 baud modem) or 4800 HZ (4800 baud modem) rate is used to provide the data terminal equipment with receiver signal element timing information. The transition from ON to OFF normally indicates the center of each signal element on the received data circuit. A timing signal will be present on this circuit when CARRIER (pin 8) is ON for data sets 201A and 201C.

11) Pin 20 DATA TERMINAL READY (TO data set).

The data terminal must apply an ON condition (+3v) on this circuit at all times to go into the DATA mode. An OFF signal on this line will not allow data set to go in the data mode. An OFF signal on this line during data transmission/reception will make data set drop the communication line. On all Wang T.C. controllers this signal is ON (+3v) at all times.

4.4.4 MODEM SELF TESTS

Several manufacturers including Bell Telephone have the self loopback test or any other kind of test built into their modem. Before calling the Telephone company or manufacturer, please use these self tests. Test procedures are always given in the modem operating manual. The Bell 201C, 208B, 202S, and 202T data sets which have self tests and instructions to run them are given in Appendix B.

5. ENGINEERING CHANGE NOTICES (E.C.N.'S)

The Communication Controllers are comprised of the following P.C.B.'s:

Model	W.L. P.C.B.#	P.C.B. DESCRIPTION
2227B	209-6723 209-6730	T.C. mother board for 2227B or 2228. Aysync T.C. daughter board of 6723.
2228	209-6723 209-6724	T.C. mother board for 2227B or 2228. T.C. Bi-sync daughter board of 6723.
2228B	209-7223 209-7224	Bi-sync B-version mother board T.C. Bi-sync daughter boards of 7223.
OP 62	209-7153	4K RAM Aysync T.C. Board.
OP-62B	209-7153-1	8K RAM Bi-sync T.C. Board.

The following is a "TO BE EXECUTED" ECN listing with the electronic revision levels (E-REV) for the associated T.C. P.C.B.'s:

ECN	P.C.B.#	DESCRIPTION
5233 [1]	6723	Artwork/Schematic/Design Change. *This ECN is to be performed simultaneously with ECN 5234 on the 6724 P.C.B. 1) Add a jumper wire from J1-13 to L12-6 ("Ø2"). REASON FOR CHANGE To improve 8251 synchronization.
6087 [2]	6723	Artwork/Schematic/Design Change See figure 1) Cut etch connecting L21-8 and L30-2 to L41-7 and L42-7. 2) Add wire jumper from L28-4 to L41-7 and L42-7 3) Add wire jumper from L28-3 to L30-2 and L21-8 REASON FOR CHANGE To make the 2227B and 2228 units compatible on 2600 VP.

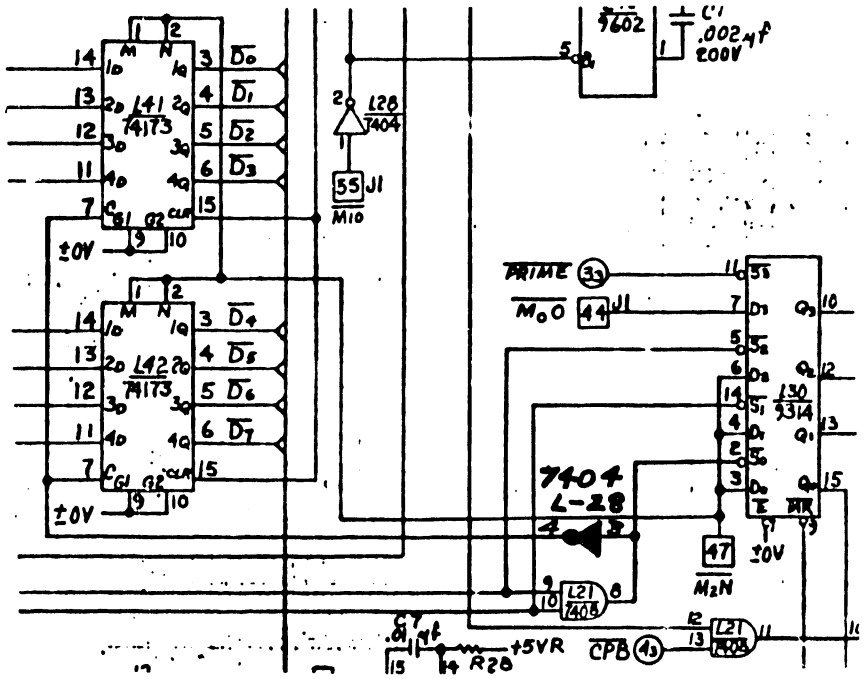

ECN #6087

5203 [1]	6724	Artwork/Loading Sketch/Schematic/ Design Change *This E.C.N has been performed on all released P.C.B.'s. REASON FOR CHANGE To decrease the noise on memory voltages by the addition of decoupling capacitors.
5234 [2]	6724	Artwork/Schematic/Design Change *This E.C.N. is to be performed simultaneously with E.C.N. 5233 on the 6723 P.C.B. 1) Cut etch connecting L9-20 to L16-1 2) Add wire jumper from L9-20 to pin 13 of the 72 pin connector ("Ø2"). REASON FOR CHANGE To improve 8251 synchronization.

5496 [3] 6724

Loading Sketch/Schematic/design change

1) Change R25 from 10Ω (330-1010) to 22Ω (330-1022)
2) Delete R26 100Ω (330-2010)
3) Delete C4 330pf (300-1330)

REASON FOR CHANGE

To eliminate cross talk between "CE" clock and address line A_{12}.

5674 [4] 6724

Artwork/Loading Sketch/Schematic/ Design Change (See figure.)

1) Add (1) 7432 (376-0093)

REASON FOR CHANGE

To eliminate gliches on baud rate clock circuit.

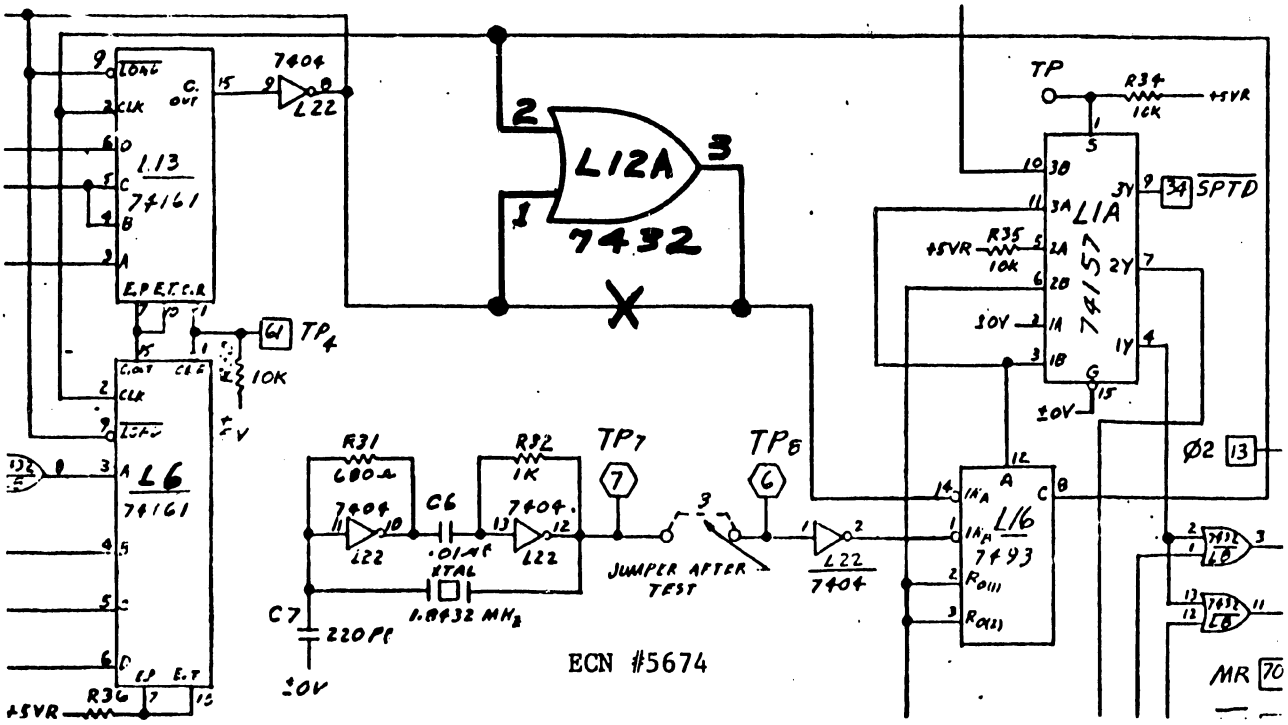

0	6720	None
6717A [1]	7153 7153-1	Artwork/Design Change See Figure.

1) Add wire jumper from L62-8 to ± OV shown.

REASON FOR CHANGE

To correct undershoot on RAM chip by eliminating ground loop on board.

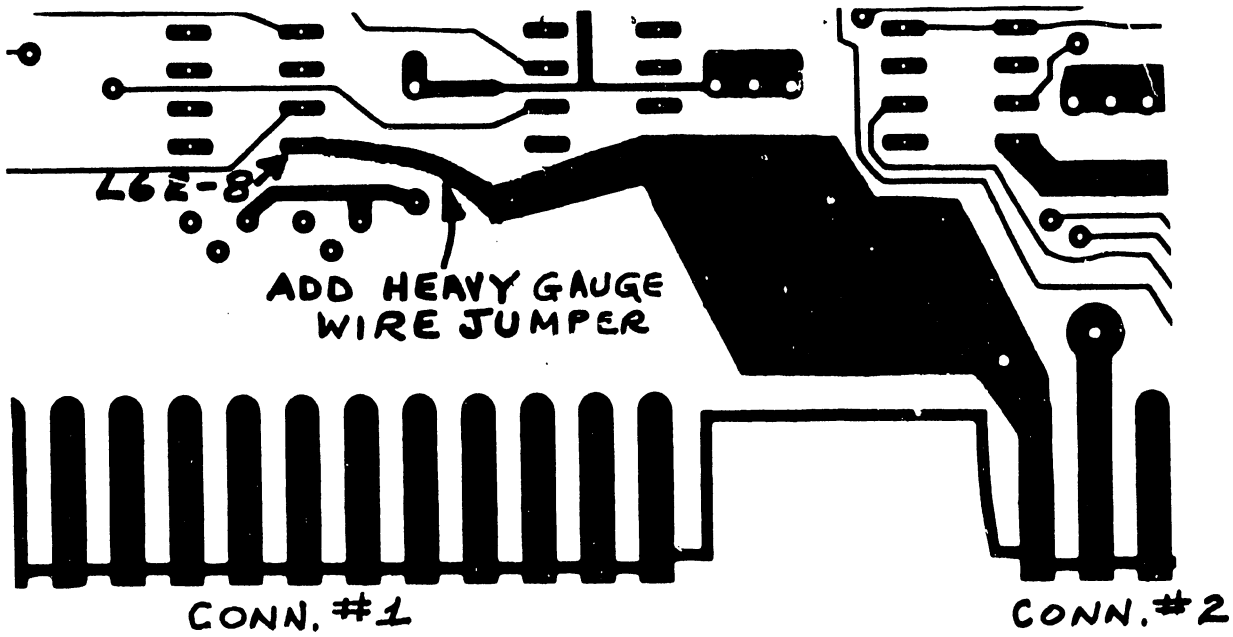

ECN #6717A

NON-COMPONENT SIDE OF 7153/7153-1

6757 [2]	7153 7153-1	Artwork/Loading Sketch/Schematic/ Design Change

1) Remove L57 Pins 1 and 15 and L15A Pin 1 from their present signal run (I/O W) and tie them all to ± 0 volts.

REASON FOR CHANGE

To meet proper set-up time for Baud Rate flip-flop.

6086 [1]	7223	Artwork/Schematic/Design Change See figure. 1) Add spare gate L9 (7400) per figure. 2) Add missing etch from L7-12 to L40-10. **REASON FOR CHANGE** To make the 2228B units compatible on 2600VP.

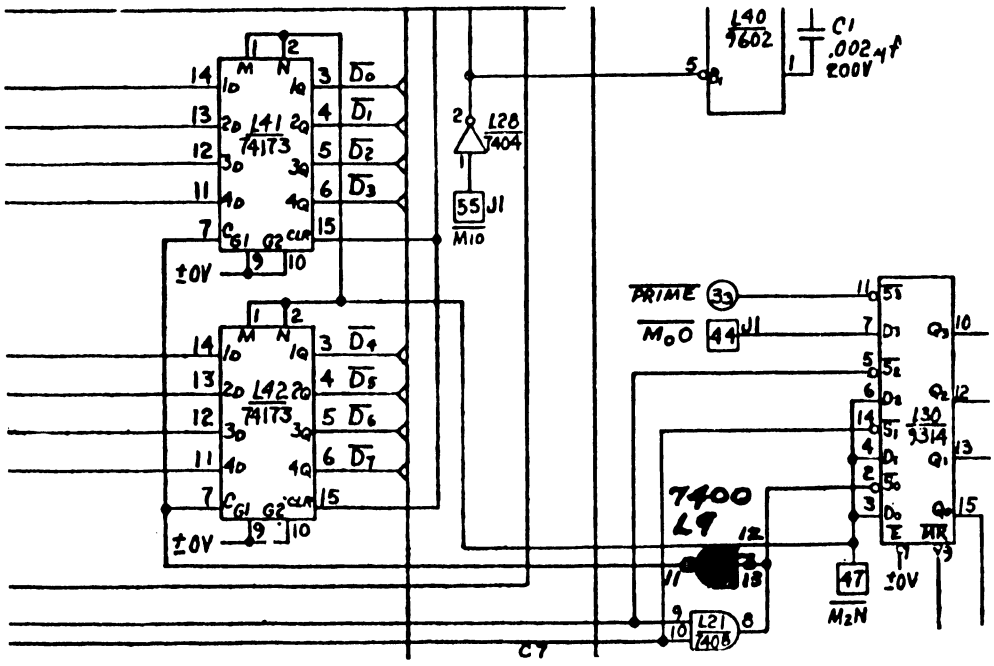

ECN #6086

[0]	7224	None

6. ELECTRONIC SCHEMATICS

DO NOT SCALE

HOLE LEGEND		
DRILLED OR PUNCHED HOLE TOLERANCES:	HOLE DIA	TOL.
	.0135 to .125	± .001
	.126 to .250	± .002
	.251 to .500	± .003

IDENT.	DESCRIPTION	QTY
A		

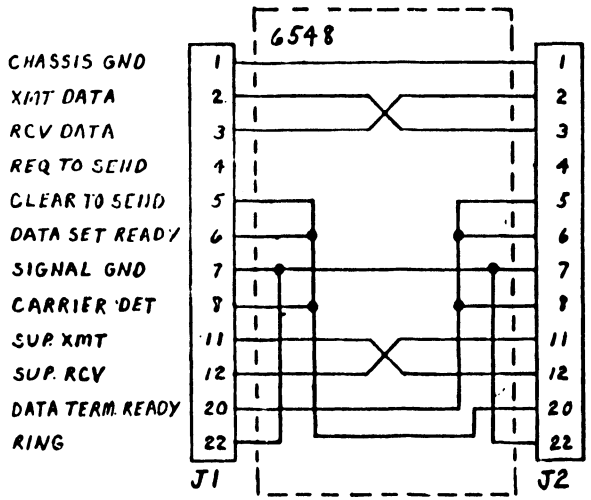

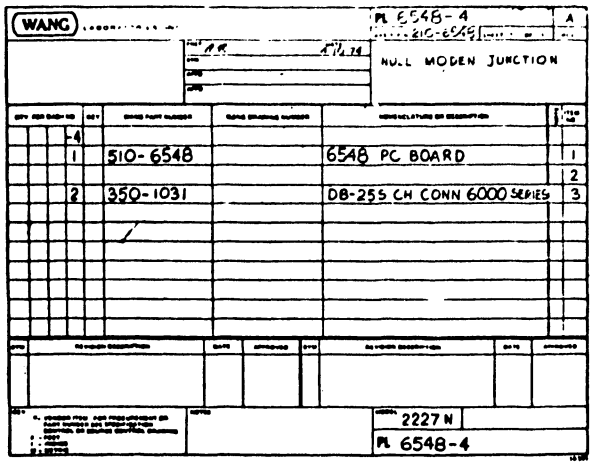

B 6548-1

REVISION	BY	DATE
NO.		

WANG PART NO.	ITEM	QTY.	NAME	MATERIAL	DESCRIPTION
Qty. Per Unit	FIRST USED ON	ASSY USED ON			

WANG LABORATORIES, INC. TEWKSBURY, MASS. U.S.A.

MATERIAL	MODEL NO. 2227-N		BY	DATE	APPROVED BY	DATE
	SEE ENGRG SPECIFICATIONS No.	DWN M.F.	1/12/74	E ENGR	4-29-74
		CHK		M ENGR	
		E. C. CONTROL		MFG ENGR	
FINISH	TOL. EX. AS NOTED .XX ± .010 FRAC. ± 1/64 .XXX ± .005 ANG. ± 1°30' FINISH 125	TITLE WIRING DIAGRAM NULL MODEM JUNCTION			
	SCALE SHT 1 OF 1	WANG PART NUMBER	B	6548-1	0
			SIZE	DRAWING NUMBER	REV.

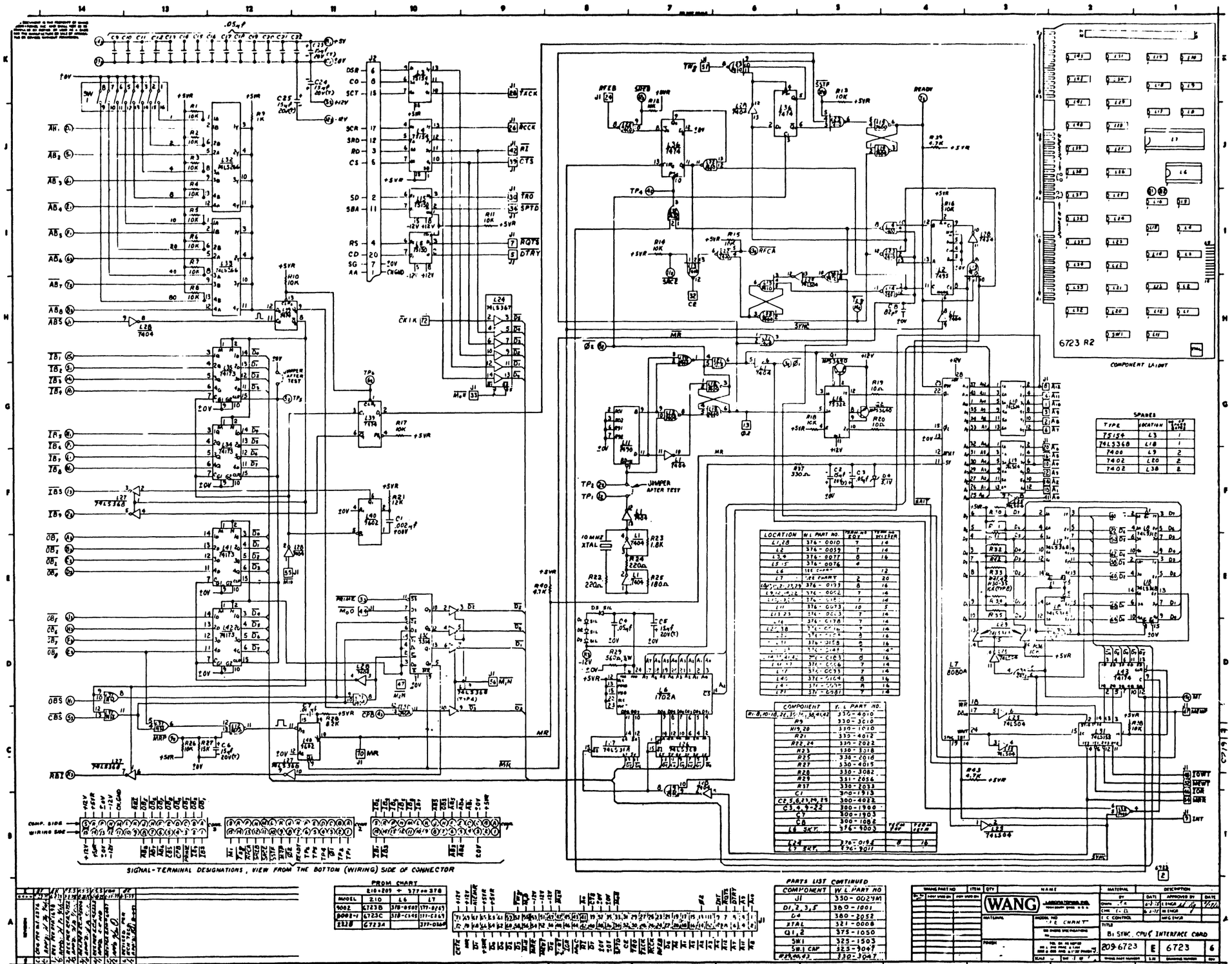

SIGNAL-TERMINAL DESIGNATIONS, VIEW FROM THE BOTTOM (WIRING) SIDE OF CONNECTOR
COMPONENT LAYOUT
6723 R2
JUMPER AFTER TEST
10 MHZ XTAL
SPARES
TYPE | LOCATION | NO. OF SPARES
75154 | L3 | 1
74LS368 | L18 | 1
7400 | L9 | 2
7402 | L20 | 2
7402 | L38 | 2
LOCATION | W.L. PART NO. | TERMINAL ROY | TERMINAL WELLSTER
L1,28 | 376-0010 | 7 | 14
L2 | 376-0059 | 7 | 14
L3,4 | 376-0077 | 8 | 16
L5,15 | 376-0076 | 4
L6 | SEE CHART | | 12
L7 | SEE CHART | 2 | 20
L8,9,10,21,22,29 | 376-0173 | 8 | 16
L9,12,14,22 | 376-0052 | 7 | 14
L10,13,25 | 376-0183 | 7 | 14
L11 | 376-0073 | 10 | 5
L13,23 | 376-0063 | 7 | 14
L14 | 376-0178 | 7 | 14
L16,38 | 376-0016 | 7 | 14
L17 | 376-0158 | 8 | 16
L18 | 376-0148 | 7 | 14
L19,37,41,42 | 376-0183 | 8 | 16
L20,37 | 376-0006 | 7 | 14
L21 | 376-0093 | 7 | 14
L40 | 376-0104 | 8 | 16
L41 | 376-0098 | 8 | 16
L42 | 376-0081 | 7 | 14
COMPONENT | W.L. PART NO.
R1-8,10-18,26,30-34,38,41,42 | 330-4010
R9 | 330-3010
R19,20 | 330-1010
R21 | 330-4012
R22,24 | 330-2022
R23 | 330-3018
R25 | 330-2018
R27 | 330-4015
R28 | 330-3082
R29 | 331-2056
R37 | 330-2033
C1 | 300-1913
C2,5,6,23,24,25 | 300-4022
C3,4,9-22 | 300-1900
C7 | 300-1903
C8 | 300-1082
L6 SKT. | 376-9003 | TERM ROY | TERM WELLSTER
L24 | 376-0194 | 8 | 16
L7 SKT. | 376-9011
PROM CHART
210 + 209 + 377 or 378
MODEL | 210 | 6 | 7
9002 | 6723B | 378-0507 | 377-0269
9002-1 | 6723C | 378-0245 | 377-0269
2228 | 6723A | | 377-0269
PARTS LIST CONTINUED
COMPONENT | W.L. PART NO
J1 | 350-0029M
D1,2,3,5 | 380-1001
D4 | 380-2052
XTAL | 321-0008
Q1,2 | 375-1050
SW1 | 325-1503
SW1 CAP | 325-9047
#29,40,43 | 330-3047
WANG
B1 SYNC. CPU & INTERFACE CARD
209-6723
E
6723
6

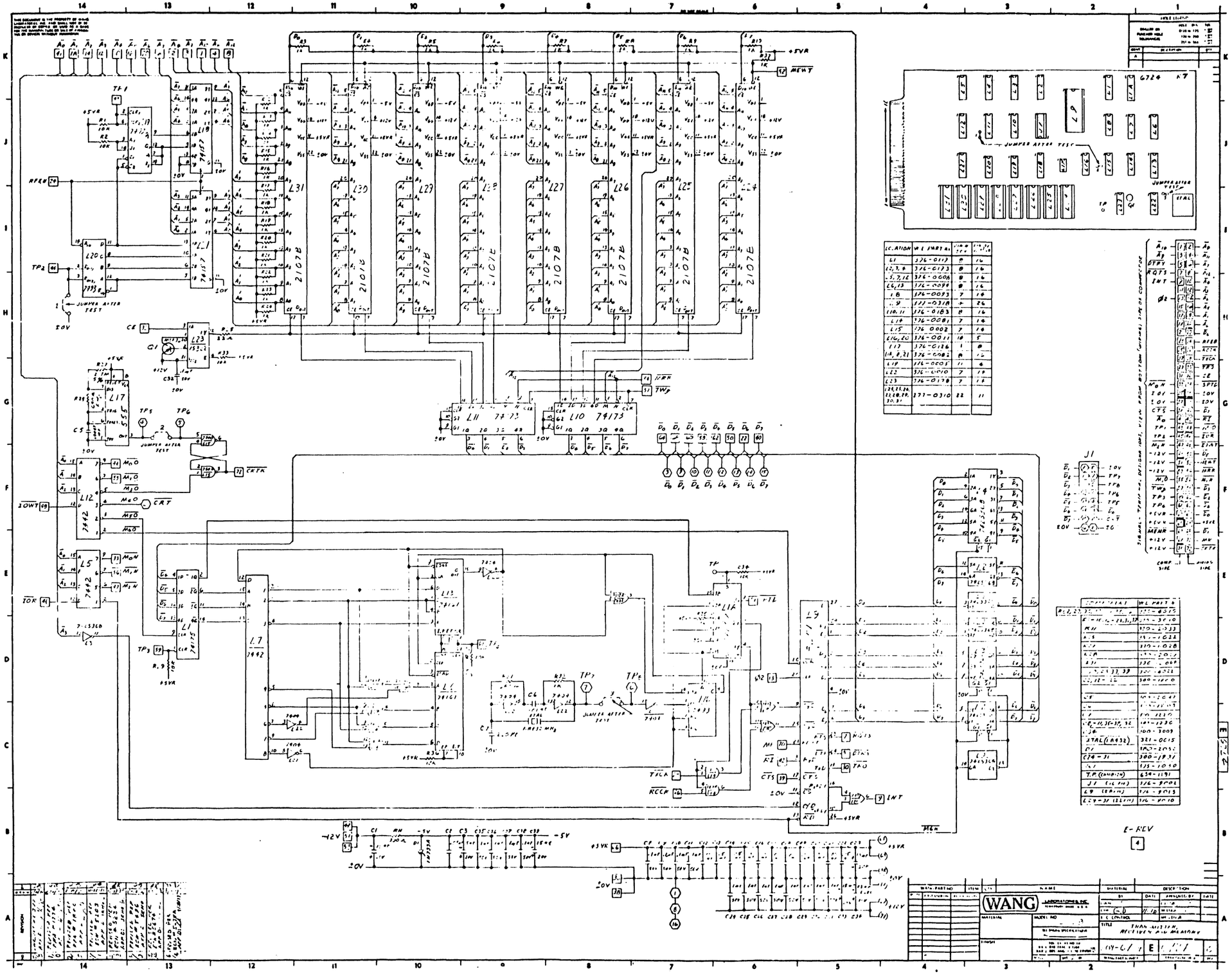
WANG
E-REV
JUMPER AFTER TEST
TRANSMITTER, RECEIVER AND MEMORY

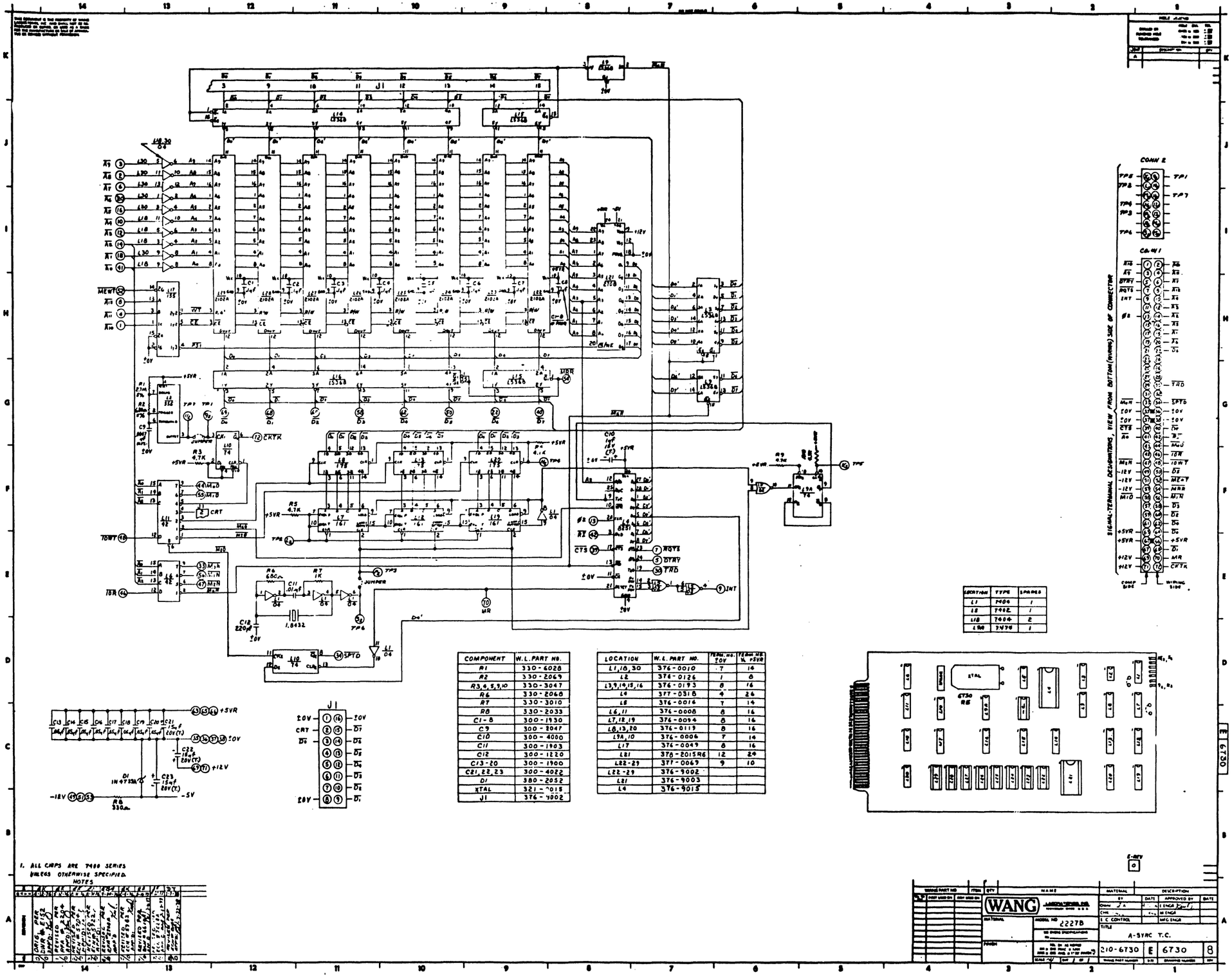

COMPONENT	W.L. PART NO.
R1	330-6028
R2	330-2069
R3,4,5,9,10	330-3047
R6	330-2068
R7	330-3010
R8	330-2033
C1-8	300-1930
C9	300-2047
C10	300-4000
C11	300-1903
C12	300-1220
C13-20	300-1900
C21,22,23	300-4022
D1	380-2052
XTAL	321-[illegible]015
J1	376-9002

LOCATION	W.L. PART NO.	TERM. NO. ±0V	TERM. NO. % +5VR
L1,18,30	376-0010	7	14
L2	376-0126	1	8
L3,9,14,15,16	376-0193	8	16
L4	377-0318	4	26
L5	376-0016	7	14
L6,11	376-0008	8	16
L7,12,19	376-0094	8	16
L8,13,20	376-0119	8	16
L9A,10	376-0006	7	14
L17	376-0049	8	16
L21	378-2015R6	12	24
L22-29	377-0069	9	10
L22-29	376-9002		
L21	376-9003		
L4	376-9015		

LOCATION	TYPE	SPARES
L1	7404	1
L5	7402	1
L18	7404	2
L9A	7474	1

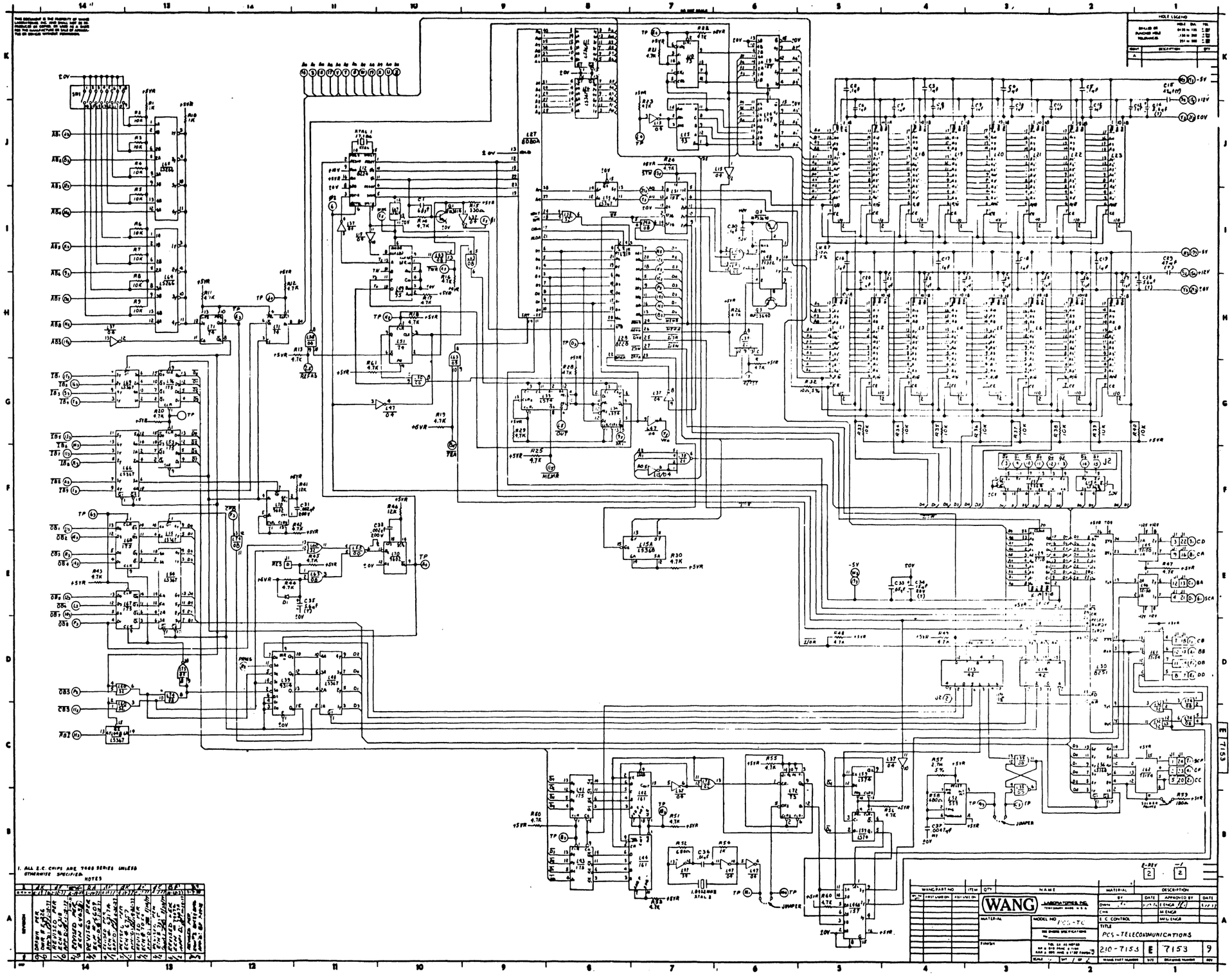
WANG
PCS - TELECOMMUNICATIONS
210-7153
E
7153
9
NOTES
1. ALL I.C. CHIPS ARE 7400 SERIES UNLESS OTHERWISE SPECIFIED.
JUMPER
JUMPER
J2
J1
J3
J4
J5
J6
J7
J8
J9
J10
J11
J12
J13
J14
J15
J16
J17
J18
J19
J20
J21
J22
J23
J24
J25
J26
J27
J28
J29
J30
J31
J32
J33
J34
J35
J36
J37
J38
J39
J40
J41
J42

COMPONENT	W.L. PART No.
SWITCH 1	325-1803
Q1	375-4017
Q2,3	375-1050
J2	376-9002
C1	300-1048
C2-5,16-19,30	300-1930
C6-13, 20-27	300-1931
C14, 28, 35	300-4017
C15	300-1820
C31, 32	300-1913
C33,36-54,59	300-1900
C34,55,56,57,60	300-4022
C36	300-1903
C37	300-2047
C58	300-4034
R1,56	330-3010
R2-10,33-40	330-4010
R11-14, 16-26, 28,29,31,42, 43,46,47-49, 51, 52, 54, 55, 58, 60,61	330-3047
R15	330-2033
R27, 32	330-1011
R41, 45	330-4012
R44	330-4047
R52,58	330-2069
R57	330-4028
R59	330-7518
XTAL 1	321-0018
XTAL 2	321-0015
D1	380-1001 98

LOCATION	W.L. PART No	TERM. NO.	POWER (Vcc +5V)
L1-8,16-23	377-0314	18	18
L9,24,44A	376-0082	8	16
L10,72	376-0008	11	4
L11,26,40,59,56,44,43,44B	376-0192	8	16
L12	377-2339		
L13,14	376-0208	8	16
L15,37,47	376-0015	7	14
L25	376-0011	10	5
L27	377-3269	2	28
L28	377-3338	14	28
L29	SEE CHART		
L30	377-0316	4	26
L31	376-3069	8	16
L32,60	376-0093	7	14
L33,34,59	376-0155	7	14
L35,50,58	376-0202	7	14
L36,57,75,15A	376-0193	8	16
L38	376-0004	7	14
L39	376-0108	8	16
L41,63,53,56	376-0160	8	16
L42,64	376-0094	8	16
L45,46	376-0076	6	
L48	376-0173	7	14
L49	376-0023	14	7
L51,71	376-0226	7	14
L52	376-0154	1	8
L61,62	376-0077	8	16
L63,74,89A	376-0081	7	14
L64,65	376-0145	7	14
L67,68	376-0113	8	16
L70	376-0104	8	16
L73	376-0116	7	14
L27 SOCKET	376-92	—	—
28PIN SOCKET	376-9015	—	—

LOCATION	TYPE	SPARES
L13	7492	1
L14	7492	3
L37	7404	1
L38	7420	1
L51	7474	1
L63	7408	1
L73	7432	3
L74	7408	1
L78	74LS365	1

PROM CHART

E10 = 209 + 377 OR 378			
MODEL	210	209	L29
OPT 62	7153-A	7153	378-2065 R2
OPT 62B	7153-1A	7153-1	378-2060 R3

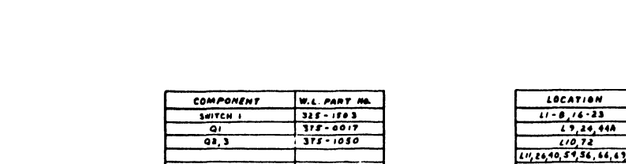

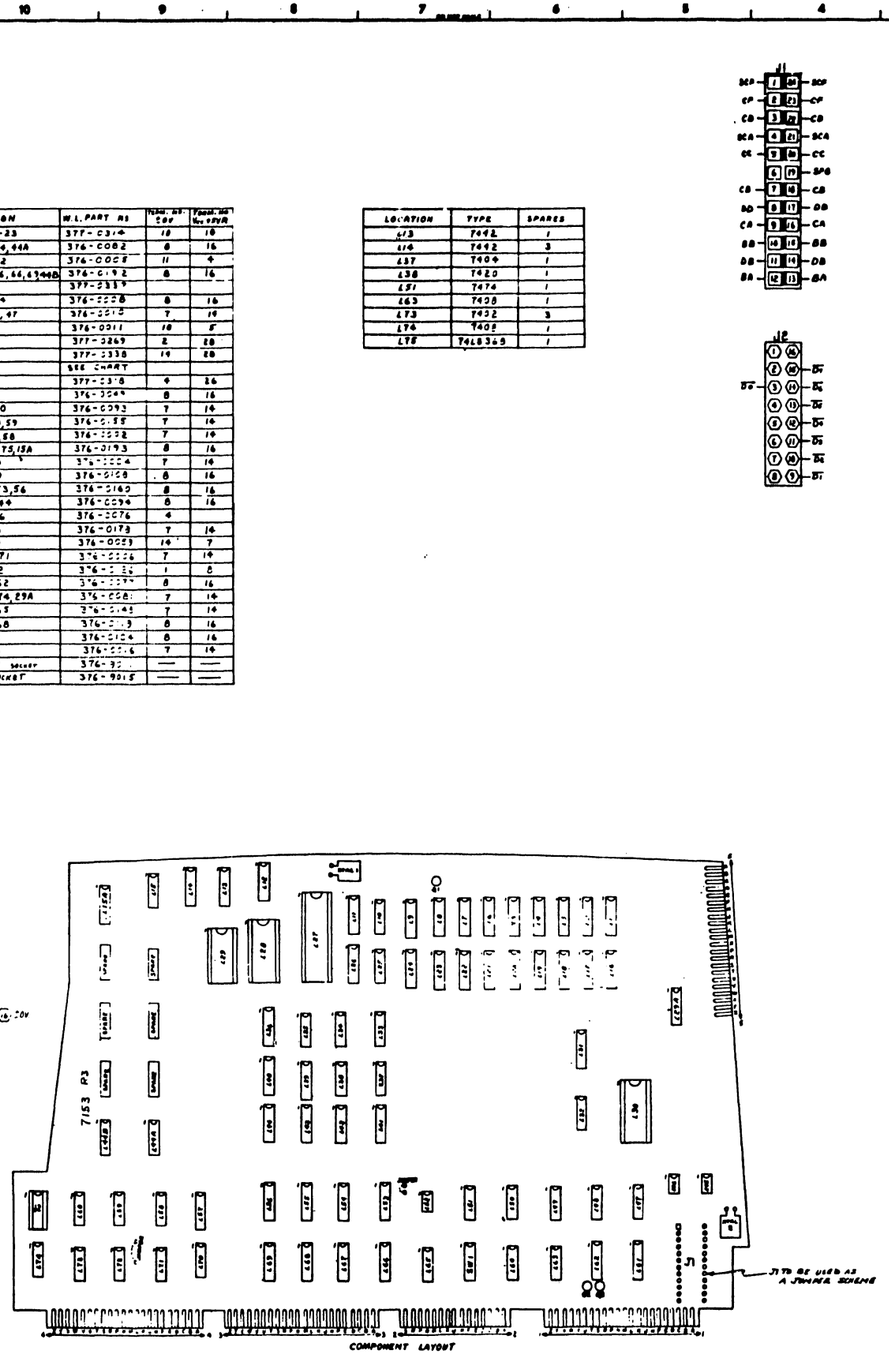

COMPONENT LAYOUT

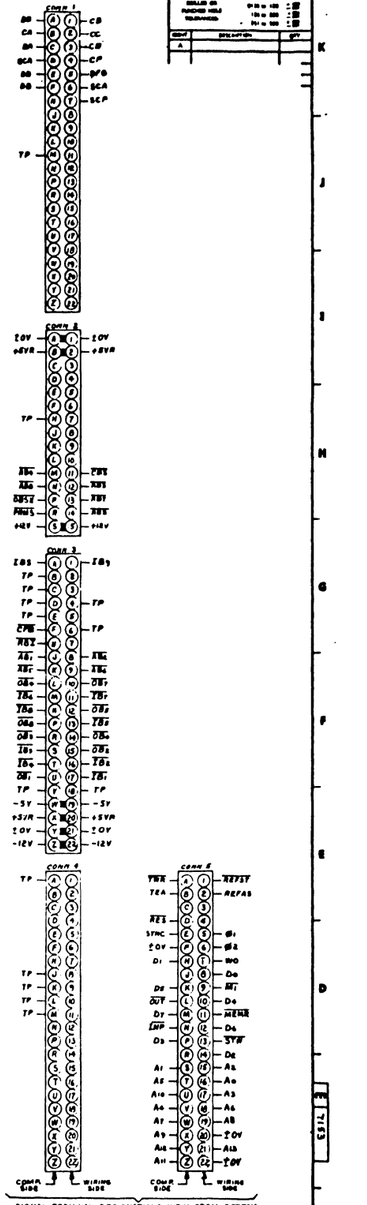

WANG PART NO	ITEM	QTY	NAME	MATERIAL	DESCRIPTION
			WANG LABORATORIES, INC.		BY / DATE / APPROVED BY / DATE
			MATERIAL	MODEL NO 7153-TC	DWN / E ENGR
			FINISH	THIS SHEET SPECIFICATIONS	CHK / M ENGR
					E C CONTROL / MFG ENGR
					TITLE: PCS-TELECOMMUNICATIONS
					210-7153 / E / 7153 / 9

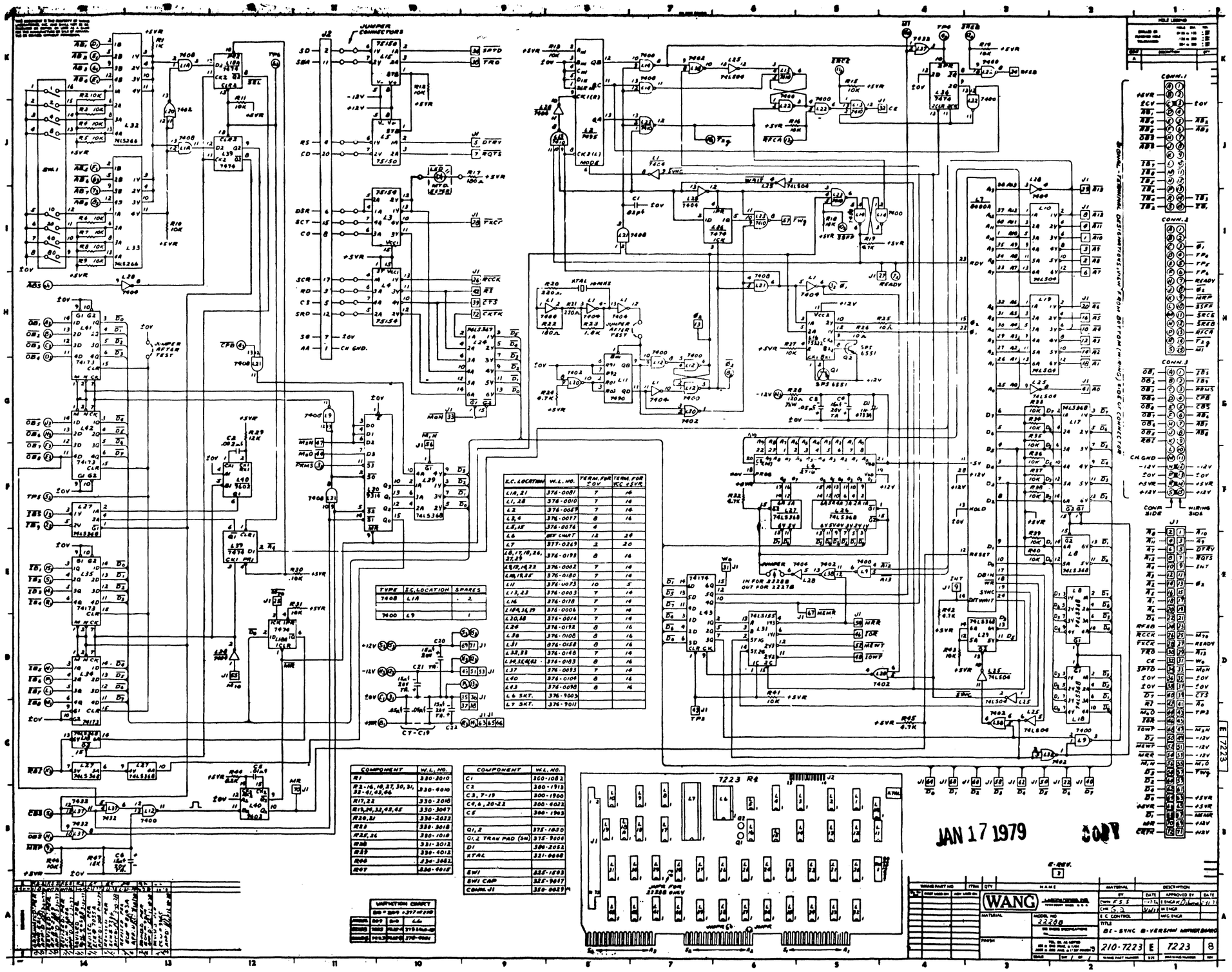
JUMPER CONNECTORS
J2
XBS
SD
SBA
RS
CD
DSR
SCT
CO
SCR
RD
CS
SRD
SB
AA
SBYD
TRO
DTRV
RQTS
TRCV
RCCK
RT
CTS
CKTR
MRH
CH GND.
+5VR
+12V
-12V
+10V
TPS
TBS
TBS
CPB
MRH
MRS
MRM
PRMS
MR
MW
MEMR
IOWP
IOWR
MRR
MEMW
HOLD
RESET
INT
DBIN
SYNC
WAIT
HLDA
INTA
RFCA
RTCA
FWG
SWI
SWI CAP
CONN. J1
JUMPER AFTER TEST
XTAL 10MHZ
JUMPER AFTER TEST
IN FOR 2228B
OUT FOR 2228
JUMPER FOR 2228 ONLY
7223 R4
J2
J1
JAN 17 1979
CONN. 1
CONN. 2
CONN. 3
CONN. J1
WIRING SIDE
COMP. SIDE
E.C. LOCATION | W.L. NO. | TERM. FOR 0V | TERM. FOR VCC +5VR
L18, 21 | 376-0081 | 7 | 14
L1, 28 | 376-0010 | 7 | 14
L2 | 376-0069 | 7 | 14
L3, 4 | 376-0077 | 8 | 16
L5, 15 | 376-0076 | 4
L6 | SEE CHART | 12 | 24
L7 | 377-0269 | 2 | 20
L8, 17, 19, 26, 27, 29 | 376-0193 | 8 | 16
L9, 10, 14, 23 | 376-0002 | 7 | 14
L11, 13, 25 | 376-0180 | 7 | 14
L11 | 376-0073 | 10 | 5
L12, 22 | 376-0003 | 7 | 14
L16 | 376-0178 | 7 | 14
L18A, 24, 29 | 376-0006 | 7 | 14
L20, 58 | 376-0014 | 7 | 14
L30 | 376-0192 | 8 | 16
L30 | 376-0108 | 8 | 16
L31 | 376-0158 | 8 | 16
L32, 33 | 376-0146 | 7 | 14
L34, 35, 40, 42 | 376-0183 | 8 | 16
L37 | 376-0093 | 7 | 14
L40 | 376-0109 | 8 | 16
L43 | 376-0098 | 8 | 16
L6 SKT. | 376-9003
L7 SKT. | 376-9011
TYPE | I.C. LOCATION | SPARES
7408 | L18 | 2
7400 | L9 | 1
COMPONENT | W.L. NO.
R1 | 330-3010
R3-16, 18, 27, 30, 31, 32-41, 43, 46 | 330-6010
R17, 22 | 330-2010
R19, 24, 32, 42, 45 | 330-3047
R20, 21 | 336-2033
R23 | 330-3018
R25, 26 | 330-1018
R28 | 331-2012
R29 | 330-4012
R44 | 330-3882
R47 | 330-9015
COMPONENT | W.L. NO.
C1 | 300-1082
C2 | 300-1913
C3, 7-19 | 300-1900
C4, 6, 20-22 | 300-6032
C5 | 300-1903
Q1, 2 | 375-1050
Q1, 2 TRAN PAD (SM) | 375-9000
D1 | 390-2002
XTAL | 321-9008
SWI | 325-1893
SWI CAP | 325-9617
CONN. J1 | 330-6029
VARIATION CHART
B-SYNC B-VERSION MOTHER BOARD
WANG
MODEL NO. 2228B
210-7223 | E | 7223 | 8
7223 R4
E 7223

COMPONENT	W.L. PART NO.
R1,2,13-17	330-4010
R3,4,19-24	330-3022
R8	330-6028
R9	330-2069
R10	330-2068
R11,5	330-3010
C1-8,21	300-1930
C9-12,14-17	300-1931
C13,18	300-4017
C22	300-2067
C23	300-1903
C24	300-1280
C25-34,19	300-1900
C35,20	300-4022
C36	300-4620
R18	331-2033
XTAL	321-0018
Q1,2	375-1050
D1	380-2052
J1	376-9008
R6,7	330-1011

LOCATION	TYPE	SPARES
L2	7408	1
L11	74LS368	2
L21	7404	1

LOCATION	W.L. PART NO.	TYPICAL NO. +5V	TYPICAL NO. +12V
L1	376-3093	7	14
L2	376-1081	7	14
L3,30,42	376-0082	8	16
L4,5	376-0094	8	16
L6,43	376-0005	11	4
L7	376-0096	7	14
L8	376-0126	1	8
L9,18	376-0002	7	14
L10	376-0049	8	16
L11,12,13,16,17	376-0193	8	16
L14,15	376-0119	8	16
L18A,21	376-0010	7	14
L19,20	376-0008	8	16
L22-29,34-41	377-0314	18	
L32	377-0318	4	26
L33	376-0178	7	14
L22-29,34-41	376-9014		
L31	376-0011	10	5
L32	376-9018		

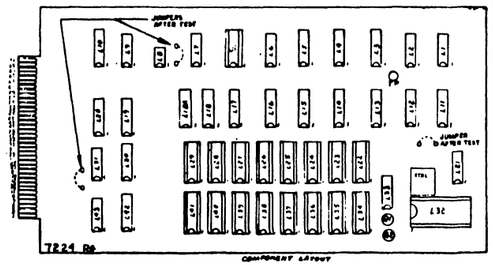

NOTES
1. ALL I.C. CURRENTS ARE 7400 SERIES UNLESS OTHERWISE SPECIFIED.

REVISION	BY	DATE	APPROVED BY	DATE
ORIGINATED PER ECO 1224 REV. 0			DRWN	
REVISED PER ECO 1224 REV. A			CHK	
REVISED PER ECO 1224 REV. B			E C CONTROL	

WANG LABORATORIES, INC. TEWKSBURY, MASS. 01876

MATERIAL

MODEL NO 2228B

TITLE SCHEMATIC LOGIBLOC TRANSMITTER/RECEIVER MEMORY BOARD

210-7224 | E | 7224 | 4

APPENDIX A
THE TC FILE FORMAT

The "telecommunications (TC) format" for disk data files is defined as follows:

1. Records are packed into a one-dimensional alphanumeric array having four elements, each 62 bytes long, e.g., DIM A$(4)62. The array is saved into a single sector by using the DATASAVE DC or DATASAVE DA statements.

2. Within the 248 bytes of storage, three types of control bytes are used (see x, y, and z in the following diagram).

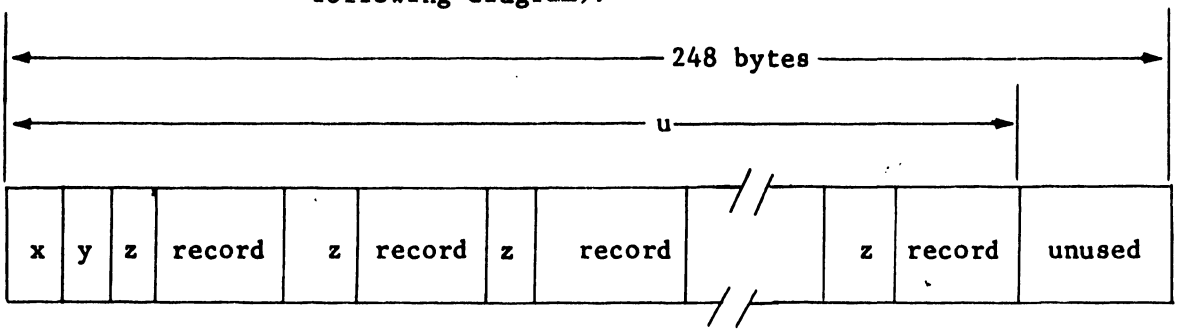

x = the first byte in the array -- a one-byte hexadecimal code indicating whether the sector is or is not the last sector in the file; in particular, x=HEX(FO) denotes "is the last sector", x=HEX(00) denotes "not the last sector."

y = the second byte in the array -- a one-byte hexadecimal value denoting the "number of used bytes plus one" in the array. For example, in the diagram, y is the hexadecimal equivalent of the value u+1.

z = a one-byte hexadecimal value preceding each record to donate "the record length in bytes", where the maximum acceptable length for input files is 192 bytes. For example, if a record contains 39 bytes, z=HEX(27) since $(27)_{16} = (39)_{10}$.

record = one complete record -- individual records do not overlap from one 248-byte array to the next.

It is the responsibility of the user's applications program to store data on the disk/diskette/mini-diskette in TC format. It also is the responsibility of the user's applications program to read and process received data files which have been outputed to a disk/diskette/mini-diskette in TC format by the emulation program. A standalone utility program called DATA ENTRY 1, originated by Wang, is available as part of the TC Support Utilities 1 Package. This program allows the user to create TC formatted disk/diskette/mini-diskette files or to edit, delete, rearrange, create, and list records in an existant TC formatted disk/diskette/ mini-diskette file.

APPENDIX B

OPERATING PROCEDURE FOR SELF-TESTS ON MODEMS

DATA SET 201C SELF TESTS

BUTTONS ON THE DATA SET

Five buttons are located on the front panel of the data set.

The functions of the buttons are as follows:

RO (Receive Only) - Used when testing the data set to condition it locally as a receiver.

AL (Analog Loopback) - Connects the output of the local transmitter to the input of the local receiver.

ST (Self Test) - When depressed this button causes the data set transmitter to turn on and transmit fixed pattern.

RT (Remote Test) - When depressed, this button conditions the data set to be tested remotely from a Telephone Company Data Test Center.

DL (Digital Loopback) - This button allows for digital loopback test on a 4 wire data set.

STATUS LAMPS ON THE DATA SET

The data set is provided with eight status lamps. Each lamp lights a portion of the front panel which shows the name of the control lead being monitored. The lamps and their functions are as follows:

ON lamp - This lights when the power cord is plugged into a 105- to 130-volt ac source.

TR (Terminal Ready) - This lamp monitors the status of the data terminal ready signal on the customer interface. When the lamp is lighted, the signal is in the on condition and tells the data set that the terminal is ready for data communication.

MR (Modem Ready) - This lamp monitors the status of the data set ready signal on the customer interface. When the lamp is lighted, the signal is in the on condition and the data set is ready for data communication.

RS (Request-to-Send) - This lamps indicates the status of the request-to-send singal on the customer interface or from the internal circuits which check the data set. When the lamp is lighted, the request-to-send signal is in the on condition and tells the data set to be conditioned to transmit data. In normal operation, when the CO lamp is on, the RS lamp will be off regardless of the status of the RS signal at the customer interface.

CS (Clear-to-Send) - This lamps monitors the status of the clear-to-send signal on the customer interface during both normal and test modes of operation. When the lamp is lighted, the signal is in the on condition and the data set is ready to transmit data.

CO (Carrier On) - This lamps monitors the status of the carrier on signal on the customer interface during both normal and test modes of operation. The lamps come on when a signal is being received by the data set.

MC (Modem Check) - The MC lamp indicates the absence of the receiver signal timing (pin 17) signal at the customer interface. In normal operation, the lamp will be ON when the CO lamp is OFF. It will be OFF when the CO lamp and interface signal CF (pin 8) are ON. When using the self-test feature, the MC lamp is ON whenever CO is OFF. However, when CO is ON during self-test, the MC flashes ON whenever an error occurs on the received data lead.

TM (Test Mode) - This lamp will light when the data set is placed in the test mode by use of the AL, ST, RT or DL test switches.

TESTING

Perform an analog loop-back self-test with a data set at each end. If either set fails, replace it with one known to be operating properly.

If both data sets pass the analog loop-back self-test, perform the end-to-end self-test (2-wire sets).

ANALOG LOOP-BACK SELF TEST (2-WIRE OR 4-WIRE DATA SETS)

1. Depress the AL and ST switches.

   Requirement: All lamps except MC are lighted during a 30-second testing interval. If the MC lamp blinks or remains steadily ON, or if any of the other lamps are extinquished, the data set is defective and should be replaced.

2. Depress the RO switch.

   Requirement: RS and CS lamps extinguish. MC lamp lights. CO lamp extinguishes if data set optioned for switched carrier operation (options XA, XD, or XE).

3. Return the data set to normal operation by depressing the RO, ST, and AL switches.

   Requirement: Switches return to the out position and TM lamp extinguishes.

END-TO-END SELF-TEST (2-WIRE DATA SET)

1. Depress ST switch at both ends.

   Requirement: TM lamp lights.

2. Depress RO switch at receive ends.

3. Establish line connection.

   Requirement: At transmit end, all lamps are lighted except CO lamp. At receive end, all lamps are lighted except RS, CS, and MC lamps. If MC lamp blinks an average or more than twice per minute or remains steadily ON, the data set or telephone facility is the source of trouble.

4. Repeat the test in the opposite direction by releasing the RO switch at one end and depressing the RO switch at the other end.

5. Return to pretest mode by releasing the ST switches at both ends and releasing the RO switch at the receive end.

   Requirement: TM lamp extinguishes.

BUTTONS ON THE DATA SET

Six buttons are located on the front panel of the data set. All of these except the LP button are push-to-operate, push-to-release type. The functions of the buttons are as follows:

LP (Lamp Test) - When depressed, this button causes all of the lamps to light except the ON lamp.* This button is used to determine if all the status lamps are functional. Its use does not affect other data set operations.

AL (Analog Loopback) - Connects the output of the local transmitter to the input of the local receiver. Depressing the AL button prevents the data set from entering the data mode from the talk mode or upon automatic answer. While the talk mode is not inhibited and calls can be made with the telephone set, any attempt to transfer to the data mode will result in the line being disconnected if the AL button is depressed.

ST (Self Test) - When depressed, this button causes the data set transmitter to turn on and transmit a fixed pattern. The receiver is conditioned to look for this pattern and generate a signal which causes the ER lamp to flash if an error is detected.

RO (Receive Only) - Used when testing the data set to condition it locally as a receiver. When depressed, the switch internally conditions the request-to-send signal to off regardless of the state of the request-to-send signal from the terminal equipment or from other test buttons.

RT (Remote Test) - When depressed, this button conditions the data set to be tested remotely from a Telephone Company Data Test Center (DTC).

50 Button - When depressed, this button provides a request-to-send/clear-to-send interval of 50 millisecond (ms). When the button is released, the request-to-send/clear-to-send interval is 150-ms. In almost all cases, the 50-ms request-to-send/clear-to-send interval can be used (button depressed). The 150-ms request-to-send/clear-to-send interval (button released) is provided to assure terminal compatibility and for applications where the channel delay exceeds the length of the transmitted signal. If the terminal equipment experiences frequence time-outs, the 150-ms request-to-send/clear-to send interval might correct the condition.

*The ON lamp is normally lighted when power is applied.

STATUS LAMPS ON THE DATA SET

The data set is provided with seven status lamps. Each lamp lights a portion of the front panel which shows the name of the control lead being monitored. The lamps and their functions are as follows:

ON Lamp - This lights when the power cord is plugged into a 105- to 130-volt ac source.

TR (Terminal Ready) - This lamp monitors the status of the data terminal ready signal on the customer interface. When the lamp is lighted, the signal is in the on condition and tells the data set that the terminal is ready for data communication.

MR (Modem Ready) - This lamp monitors the status of the data set ready signal on the customer interface. When the lamp is lighted, the signal is in the on condition and the data set is ready for data communication.

RS (Request-to-Send) - This lamp indicates the status of the request-to-send on the customer interface or from the internal circuits which check the data set. When the lamp is lighted, the request-to-send signal is in the on condition and tells the data set to be conditioned to transmit data. In normal operation, when the CO lamp is on, the RS lamp will be off regardless of the status of the RS signal at the customer interface.

CS (Clear-to-Send) - This lamp monitors the status of the clear-to-send signal on the customer interface during both the normal and test modes of operation. When the lamp is lighted, the signal is in the on condition and the data set is ready to transmit data.

CO (Carrier ON) - This lamp monitors the status of the carrier on signal on the customer interface during both normal and test modes of operation. The lamp comes on when a signal is being received by the data set.

ER (Equalizer Retrain) - This lamp monitors the status of the automatic retrain mode. If the CO lamp is lighted and the ER indicator is blinking, it indicates that invalid data has been received and that the automatic equalizer is now retraining. Continuous blinking, while the CO lamp is on, is an indication of marginal performance. When the data set is in the ST mode, the ER lamp blinks when an error is detected in received data. For normal operation, when the CO lamp is off, the ER lamp should be lighted and, when the CO lamp is lighted, the ER lamp should be off. Thus, CO and ER lamps light alternately in normal operation. A lighted ER lamp indicates an abnormal condition only when the CO lamp is also lighted.

DATAPHONE TESTING

In cases of suspected trouble, the attendant should perform the Lamp Check, the Analog Loopback Test, test the data terminal equipment, and perform and End-to-End Self Test before calling the Telephone Company to report trouble. Only if these checks indicate trouble in Telephone Company provided equipment should the problem be reported to the Telephone Company.

In addition to the following tests, the Telephone Company Test Center personnel may request further assistance in trouble isolation by use of built-in features

LAMP TEST

Depress the LP nonlocking button. All the lamps on the data set should be lighted. The LP button can be depressed at any time since it does not affect normal data set operation.

ANALOG LOOPBACK SELF TEST

The Analog Loopback Self Test is performed to analyze the data set without using external equipment. The test is performed as follows:

Check that the data set is idle and that power is applied.

1. Depress AL button.

2. Depress ST button.

Check that the ON, RS, CS and CO lamps are on and that ER and MR lamps are off. Disregard the status of the TR lamp. If the lamps are not as indicated, the data set has failed the Analog Loopback Self Test.

3. Observe the ER lamp for 30 seconds.

If the ER lamp is on or blinks, this indicates that the data set has failed the Analog Loopback Self Test.

At the end of the test:

4. Depress the AL and ST buttons.

The data set is returned to the normal operating condition.

NOTE:

The data set power supply is equipped with an over-voltage protection circuit which limits the output voltage as it rises excessively. If this occurs, the data set will fail the Analog Loopback Self Test. To reset the power supply, the power cord must be unplugged and replugged into the ac outlet. If the data set still fails the Analog Loopback Self Test, notify the Telephone Company Repair Service for correction of the problem.

END-TO-END SELF TEST

The End-to-End Self Test is performed to test both far-end and near-end data sets and the telephone channel between the two sets. The test is performed as follows:

1. Place a call to the far end and arrange to perform the End-to-End Self Test. Discuss the duration of the test (at least 5 minutes) and when to return to the talk mode.

Request the far end to check the following lamps after the far-end data set has been transferred to the data mode. (ON, RS, CS, and ER lamps are on; MR and CO lamps are off; disregard status of TR lamp.) If the lamps are not as indicated, the system has failed the End-to-End Self Test.

2. Request the far end to depress the ST button on the data set and the DATA button on the telephone set.

The far-end data set is now transferred to the data mode.

3. Depress the ST and RO buttons on your data set and then depress the DATA button on the telephone set.

Your data is now transferred to the data mode and it is possible to receive data.

Check that the ON and CO lamps are on at your data set and that the RS, CS, MR, and ER lamps are off. Diregard status of the TR lamp. If the lamps are not as indicated after transferring to the data mode, the system has failed the End-to-End Self Test.

Observe the ER lamp for a 5-minute period. The ER lamp should be off and should not blink more than an average of three times in any 1-minute period.

4. After the prearrange time, return to the talk mode and discuss the results of the test.

5. Repeat the test in the opposite direction by releasing the RO button on your data set. Request the far end to depress the RO button on that set.

Request the far end to check the following lamps after both data sets have been transferred to the data mode. (ON and CO lamps are on; RS, CS, MR, and ER lamps are off; disregard status of TR lamp.) If the lamps are not as indicated, the system has failed the End-to-End Self Test.

6. Return both data sets to data mode by depressing DATA buttons on the telephone sets at both locations.

Check that the ON, RS, CS, and ER lamps are on at your data set and that the MR and CO lamps are off. Disregard status of TR lamp. After transferring to the data mode, if the lamps are not as indicated, the system has failed the End-to-End Self Test.

7. Repeat the 5-minute check for this direction of transmission; then return to talk mode.

After the 5-minute check has been performed and the results have been discussed, return the data sets to normal operation as follows:

8. Release the ST button at your data set.

Data set is returned to normal operation.

9. Request the far end to release the ST and RO buttons.

Far-end data set is returned to normal operation.

NOTE:

If tests fail, make another attempt before reporting trouble by establishing a new connection.

DATA SET 202S/202T SELF TESTS

Test Switches and Self-Testing Features

Data Sets 202S and 202T are equipped with three test switches which are accessible at the front cover which permit local and remote testing of the data sets and facilities. The functions of these test switches, (Analog Loopback (AL), Local Self-Test (LT) and Remote Test (RT)) are summarized below:

1. AL (Analog Loopback): Connects the transmitter output to the receiver input and disconnects the telephone line to permit testing of the data set by the data terminal or independent test set.

2. LT (Local Self-Test): Connects the transmitter output to the receiver input, disconnects the customer interface, and conditions the data set to operate with a built-in word generator and word comparator circuit.

3a. RT (Remote Test - 2-Wire): Conditions the data set for 2-wire testing from a Telephone Company Data Test Center using the data set's built-in word generator. The Remote Test of Data Set 202S also may be used by the customer to determine if a connection can be established to the data set.

3b. RT (Remote Test - 4-Wire): Connects the output of the demodulator to the input of the modulator so that the data set operates as a repeater* for testing on 4-wire facilities from a remote location.

Status Lamps

Data set 202T is provided with six LED status lamps on the front cover; whereas, Data Set 202S is provided with an additional lamp that indicates the Data Terminal Ready status. The lamp names and their functions are described below:

ON Indicates that power is applied to the data set.

TR Terminal Ready - Data Set 202S only: Indicates the status of the Data Terminal Ready (CD) signal from the customer interface.

MR Modem Ready: Indicates the status of the Data Set Ready (CC) signal.

RS Request-to-Send: Indicates the status of Request-to-Send (CA) from the customer interface.

CS Clear-to-Send: Indicates the status of Clear-to-Send (CB) from the data set.

*The data set in 4-wire remote test does not regenerate the received data signal. If the received signal has 20 percent distortion, it is retransmitted with 20 percent distortion.

CO Carrier On: Indicates the status of Received Line Signal Detector (CF) from the data set.

TM Test Mode: Indicates that the data set is in a test mode.

The lamps operate as follows. The ON lamp will light when ac power is applied to the data set. In the DATA mode the TR, MR, RS, CS, and CO lamps light in accordance with the ON condition of the respective interface circuits CD (Data Terminal Ready), CC (Data Set Ready), CA (Request-To-Send), CB (Clear-to Send), and CF (Received Line Signal Detector).

The TM lamp will light when the data set is placed in the TEST mode by use of the AL, LT, or RT test switches. For the Analog Loopback Test and Remote Test the lamp will go OFF only if the data set is removed from the TEST mode by releasing the appropriate test switch. For the Local Self Test the TM lamp will go OFF before the test is ended if an error is made. As a test that the lamps are working, all the lamps will go ON in the Local Self Test and two-wire Remote Test irrespective of the status of the interface circuits.

TESTING OF THE DATA SETS 202S and 202T

Data Sets 202S and 202T have test capabilities which can be used by a customer to expedite the isolation of transmission problems to either the data set, the transmission facilities, or the customer's data terminal equipment. These test features may be used either prior to calling the Telephone Company Repair Service or when the Telephone Company Test Center requested assistance with certain remote tests. The use of the test buttons and status lamps on Data Sets 202S and 202T is described in this section. Before proceeding with the following tests, the data terminal equipment associated with the data set under test should be in the idle mode so that data transmission is not interrupted by these tests.

Local Self-Test (LT) - Data Sets 202S and 202T

The Local Self-Test may be used to determine whether the data set is performing properly. The attendant depresses the nonlocking LT button on the data set housing to initiate the test, and must manually keep the button depressed for the duration of the test. An OFF indication is given on the Data Set Ready circuit, while other data set interface drivers are either in the Mark or OFF state and the interface terminators are isolated from the data terminal equipment.

All lamps are turned ON regardless of the status of the interface circuits, upon entering the Local Self-Test, to check the operating condition of the lamps. If a single error occurs during the test, the TM (Test Mode) lamps turns OFF and remain OFF until the LT button is released and depressed again. If an error occurs during a 15 second test, the test should be repeated. The data set should pass (TM lamp does not go OFF) 4 of 5, 15 second tests. The release of the LT button returns the data set to normal operation.

Remote Test (RT) - Data Set 202S

A 2-wire Remote Test may be used by the customer to determine if a connection can be established to a remote data set. Any convenient telephone handset may be used in performing this test. However, if the telephone handset of the calling data set is used, the entire telephone connection can be tested. A Data Set 202S in Remote Test will automatically answer an incoming call and go through the call set up procedure for the called data set. The data set will trip ringing, go through a quiet interval of 1.3 seconds, transmit answer tone for 1.9 seconds and then transmit a random data signal. The customer can monitor this sequence with the telephone set to determine if the data set and link from the data set to the calling station are in working order. For data sets with reverse channel, a low frequence beeping tone will also be heard. If the above sequence does not occur, the customer should report the problem to the Telephone Company. It should be noted that during this test noise or speech picked up by the mouth piece of the telephone hand set may cause the remote data set to transmit a steady tone instead of the random data.

END