IBM Maintenance Library

3274

Control Unit
Models 51C and 52C
Maintenance Information

SY27-2513-4

Contents

Chapter 1. Introduction 1-1
1.1 General 1-1
1.2 Maintenance Approach 1-1
1.3 Field Replaceable Unit (FRU) Locations 1-2
1.3.1 Machine Model Number 1-2
1.3.2 01A-A1 Logic Board 1-2
1.3.3 Card Numbers 1-2
1.3.4 Operator Panel 1-2
1.3.4.1 IML Options 1-2
1.3.4.2 Indicators (8 4 2 1) 1-3

Chapter 2. Subsystem Problem Isolation Procedure 2-1
Step 1 Using the Isolation Procedure 2-1
Step 2 Power Test 2-1
Step 3 Bus Test 2-1
Step 4 Internal Tests 2-3
Step 5 Device Adapters – Driver/Receiver 2-8
Step 6 Display Symbols (Category A Only) 2-12
Step 7 Operational Indicators (8 4 2 1) 2-14
Step 8 Host Attachment 2-15
Step 9 Voltage Checks 2-15
Step 10 Verification Test 2-15
Step 11 Last Option 2-15

Chapter 3. Maintenance Analysis Procedures (MAPs) 3-1
3-1 General 3-1
3.2 Contents 3-1
MAP A10, Bus Test 3-2
MAP A20, Control Logic Failure 3-7
MAP A40, Diskette Failure 3-11
MAP A50, Type A Adapter Failure Code 3-17
MAP A90, Device Adapter Type B 3-20
MAP A100, Machine Checkout 3-22
MAP A120, Power Problem, Indicator On or Off 3-24
MAP A122, Power On Indicator is Off and Fan Not Turning 3- 36
MAP A130, I.M. 2400, 4800, 9600 Failure 3-42
MAP A150, Installation/Customization Problems 3-47

Chapter 4. Removal and Replacement Procedures 4-1
4.1 Machine Access – Cover Removal/CE Manuals 4-2
4.2 Machine Access – Board/TSR Supply 4-3
4.3 Card Removal and Replacement 4-4
4.4 Internal Cable/Connector, Removal and Replacement 4-4
4.5 Prime Power Box, Removal and Replacement 4-5
4.6 Prime Power Transformer, Removal and Replacement 4-6
4.7 Fan Assembly, Removal and Replacement 4-7
4.8 Diode Assembly, Removal and Replacement 4-8
4.9 Input Filter Capacitor, Removal and Replacement 4-9
4.10 TSR Power Supply, Removal and Replacement 4-10
4.11 I/O Panel – Driver/Receiver, Removal and Replacement 4-11
4.12 Diskette Drive, Removal and Replacement 4-12
4.13 Line Plate Card, Removal and Replacement 4-13
4.14 Operator Panel/Indicator Card, Removal and Replacement 4-14
4.15 Logic Board, Removal and Replacement 4-15
4.16 Operator Panel Switches, Removal and Replacement 4-16

Chapter 5. Communications Reference Data 5-1
5.1 Communications Facilities 5-1
5.1.1 3274 Models 51C and 52C SDLC 5-1
5.1.2 3274 Model 51C BSC 5-1
5.1.3 3274 Models 51C and 52C Modes/Speeds 5-1
5.1.4 Communication Adapters 5-1
5.2 Communications Attachments 5-1
5.2.1 External Modem EIA/V.35 5-1
5.2.2 Integrated Modem (1200 bps) 5-1
5.2.3 Integrated Modem (1200 bps) Wrap 5-4
5.2.4 Integrated Modems (2400, 4800, and 9600 bps), Model 51C 5-4
5.2.5 DDS Adapter 5-4
5.2.6 Loop 5-4
5.2.7 X.21 Nonswitched 5-4
5.2.8 X.21 Switched 5-4
5.3 Wrap Test 5-13
5.3.1 Modem Wrap Test 5-13
5.3.2 Wrap Test without Attached Modem (X.21 and EIA or V.35 without Clock) 5-13
5.3.3 Loop Wrap Test 5-14
5.3.4 Loop Indicators 5-14
5.4 2400-, 4800-, and 9600-bps Integrated Modems 5-14
5.4.1 2400-bps Integrated Modem (Feature Code 5640) 5-14
5.4.2 4800-bps Integrated Modem (Feature Code 5740) 5-14
5.4.3 9600-bps Integrated Modem (Feature Codes 5480 and 5842) 5-14
5.4.4 Line Attachments 5-14
5.4.4.1 Multipoint Network Operating Speed 5-14
5.4.4.2 Point-to-Point Network Operating Speed 5-14
5.4.4.3 Signal Quality 5-18
5.4.4.4 Speed Control Backup 5-18
5.4.4.5 Operate Indicator 5-18
5.4.5 2400-, 4800-, 9600-bps Integrated Modem Diagnostics 5-18
5.4.5.1 Self-Test/Wrap Test 5-18
5.4.5.2 Integrated Modem Failure 5-18
5.4.5.3 ALT2 Self-Test 5-18
5.4.5.4 ALT2/IML Modem Wrap Test 5-22
5.4.5.5 Test Alarm Card (TAC) Extended Diagnostic 5-22
5.4.5.6 Procedure to Follow if IML Test 0111 is Flashing 5-22
5.4.6 Transmit Level Adjustment 5-22
5.4.6.1 U.S. and Canada 5-22
5.4.6.2 Other Countries 5-22
5.4.7 Front End Card Replacement and Adjustment 5-22
5.4.8 Test Alarm Card (TAC) Transmit Tone Adjustment 5-24
5.4.9 Board Wiring Options 5-25
5.4.9.1 Teleprocessing Attachment (Point-to-Point and Multipoint) 5-25
5.4.9.2 Clear-to-Send Delay (Normally Not Adjusted) 5-25
5.4.9.3 Carrier Detect Sensitivity (Normally Not Adjusted) 5-25
5.5.9.4 Continuous/Noncontinuous Carrier (Normally Not Adjusted) 5-25
5.4.10 Card Wiring Options 5-25
5.4.10.1 Transmission Pre-Emphasis for 2400-bps (Normally Not Adjusted) 5-25
5.4.11 2400-, 4800-, and 9600-bps Integrated Modem Reference Information 5-25
5.5 3274 System Grounding 5-25
5.6 Link Problem Determination Aid (LPDA) 5-29
5.7 Modem Address Switches 5-29
5.8 3290 Address Configuration 5-31
5.8.1 Configuration Support T 5-32
5.8.2 Configuration Support D 5-32

Chapter 6. 3274 Encrypt/Decrypt Feature 6-1
6.1 Feature Description 6-1
6.1.1 IML Display Indications 6-1
6.1.2 Feature Components 6-1
6.1.3 Encrypt/Decrypt Failures 6-1
6.2 Battery Power Supply Check 6-1
6.3 Procedure for Encrypt/Decrypt Battery Replacement 6-2
6.4 Entering the Terminal Master Key 6-3
6.5 Verifying the Terminal Master Key 6-4
6.6 Encrypt/Decrypt Feature Test 6-5

Chapter 7. Response Time Monitor 7-1
7.1 Feature Description 7-1
7.2 Microcode Support 7-1
7.3 IML Testing 7-1

Appendix A. Locations A-1

Appendix B. Power Supplies B-1

Appendix C. Connector, Board, and Card Locations C-1

Appendix D. Operator and Control Panels D-1
D.1 3274 Models 51C and 52C Operator Panel D-1
D.1.1 Indicators 8 4 2 1 D-1
D.1.2 Loop Attachment Indicators D-1
D.1.3 Switched Line Operate Switch/Call In Progress Indicator D-1
D.1.4 2400-, 4800-, and 9600-bps Integrated Modem Indicators D-1
D.2 IML Options D-1
D.2.1 Normal D-1
D.2.2 ALT 1 D-2
D.2.3 ALT 2 D-2
D.2.4 ALT 2 (2400-, 4800-, and 9600-bps Integrated Modem) D-2
D.3 Loop and Modem Control Panels D-2
D.3.1 Loop Attachment Control Panel D-2
D.3.2 1200-bps Integrated Modem Control Panel D-2
D.3.3 1200-bps Transmit Level Attenuation Switch Adjustment Procedure (U.S. and Canada Only) D-2

Appendix E. 31SD Diskette Drive Maintenance E-1
E.1 Introduction E-3
E.2 Device Theory of Operation E-13
E.3 Maintenance E-22

Appendix F. 51TD Diskette Drive Maintenance F-1
F.1 Introduction F-2
F.2 Device Theory of Operation F-13
F.3 Maintenance F-22

Appendix G. Glossary G-1

Appendix P. 3274 Models 51C and 52C Parts Catalog P-1

Figures

1-1. Maintenance Approach 1-1
1-2. 3274 Models 51C/52C Locations 1-4
1-3. 01A-A1 Board – Model 51C (with/without Category B Devices) 1-5
1-4. 01A-A1 Board – Model 52C (Kanji/Chinese) 1-5
1-5. 01A-A1 Board – Model 51C without 2400-, 4800-, and 9600-bps Integrated Modem 1-6
1-6. 01A-A1 Board – Model 51C with 2400-, 4800-, and 9600 bps Integrated Modem 1-6
1-7. Card Location Chart 1-7
1-8. 3274 Models 51C/52C Basic Operator Controls 1-8
2-1. 3274 Problem Report Form, Sample 2-2
2-2. 3274 Hardware Block Diagram (Models 51C and 52C) 2-4
2-3. Failure Code to Card or MAP Entry 2-5
2-4. Control Storage Error Codes/Card Locations 2-6
2-5. Control Storage Card Layouts 2-7
2-6. Coaxial Cable (Driver-Receiver) DC Resistance 2-9
2-7. Translation Table for /B Test Address 2-11
2-8. Port Address Table without 3290 Displays (Model 51C) 2-11
2-9. Port Address Table with 3290 Displays (Model 51C) 2-11
2-10. Display Symbol Indications 2-13
2-11. Operational Indicators 2-14
2-12. Symptom Repair List 2-15
4-1. Machine Access, Cover 4-2
4-2. Machine Access, Board/TSR Supply 4-3
4-3. Card Connector 4-4
4-4. Prime Power Box 4-5
4-5. Prime Power Transformer 4-6
4-6. Fan Assembly 4-7
4-7. Prime Power Diode Assembly (CR1) 4-8
4-8. Prime Power Input Filter Capacitor 4-9
4-9. TSR Power Supply 4-10
4-10. I/O Panel, Driver/Receiver Card 4-11
4-11. Diskette Drive 4-12
4-12. Line Plate Card (World Trade Countries) 4-13
4-13. Operator Panel/Indicator Card 4-14
4-14. Logic Board Assembly 4-15
4-15. Operator Panel Switches 4-17
5-1. Communications Configuration 5-2
5-2. V.35 Communication Line Flow, Model 51C (Foldout) FO-1
5-3. Communications Line Flow, EIA 5-5
5-4. 3274 Communications Line Flow, 1200-bps Integrated Modem – U.S. and Canada; World Trade Countries 5-6
5-5. Communications Line Flow, DDS Adapter 5-8
5-6. Communications Line Flow, Loop 5-9
5-7. Communications Line Flow, X.21 Card PN 8564561 Nonswitched (World Trade) 5-10
5-8. Communications Line Flow, X.21 Switched and Nonswitched – Domestic and World Trade 5-11
5-9. CBS Data Coupler - U.S. and Canada 5-12
5-10. Communications Line Flow, 2400-bps, 4800-bps, and 9600-bps Nonswitched Integrated Modems (Model 51C) for U.S., Canada, and World Trade Countries 5-15
5-11. Communication Cable Plugs (4-Wire, Nonswitched) for U.S., Canada, and World Trade Countries 5-16
5-12. 2400-bps Integrated Modem Card LED Locations and Test Results 5-19
5-13. 4800-bps Integrated Modem Card LED Locations and Test Results 5-20
5-14. 9600-bps Integrated Modem Card LED Locations and Test Results 5-21
5-15. Transmit Levels (Nonswitched) for A/FE and E/ME/A Countries 5-22
5-16. Transmit Level Switch Settings 5-23
5-17. 2400-bps Integrated Modem Front End Card 5-23
5-18. 4800-bps Integrated Modem Front End Card 5-23
5-19. 9600-bps Integrated Modem Front End Card 5-23
5-20. 9600-bps Integrated Modem Receiver Extension Card 5-24
5-21. TAC Tone Levels for A/FE and E/ME/A Countries 5-24
5-22. Test Alarm Card (TAC) Transmit Tone Level Jumpering 5-24
5-23. Board Wiring for the Various Teleprocessing Attachment Configurations 5-25
5-24. 2400-, 4800-, and 9600-bps Card Functions, Locations, and Codes 5-26
5-25. Top Card Connector Pin Locations 5-27
5-26. EPROM-Card-to-Processor Card Cabling 5-28
5-27. Pluggable ROS Removal Tool 5-29
5-28. Operator Panel 5-30
5-29. Conversion of BSC Control Unit Address and SDLC Control Unit Address to Binary-Equivalent Modem Address Switch Settings on 3274 Model 51C 5-30
5-30. Example of 3274 Model 51C Modem Address Switch Settings 5-30
5-31. Addressing Configuration for Multiple Interactive Screen (MIS) – 3290 Device Attachment, Model 51C 5-31
A-1. Logic Board – Card, Connector, and Pin Locations A-2
A-2. Pin Locations – Top Card Connector A-3
A-3. Field Replaceable Units (FRUs) A-4
A-4. Field Replaceable Unit (FRU) Part Numbers A-5
A-5. Card and Board Part Number Selection A-6
A-6. Configuration and CE Data Card A-7
A-7. Printer Authorization Matrix A-8
A-8. General Logic Probe A-9
A-9. Prime Power Box Locations A-10
A-10. 3274 Models 51C and 52C Grounding A-11
A-11. Card Plugging Cautions A-12
A-12. Card Locations (Foldouts) FO-3, FO-5
B-1. Prime Power and Input (Single/Dual Supply) B-2
B-2. Single Power Supply System B-3
B-3. Dual Power Supply System B-4
B-4. Power Supply Distribution, Flow Diagram B-6
B-5. Board Voltage Distribution B-7
B-6. Transformer Input and Fan Voltage Wiring (World Trade) B-8
C-1. 1200-bps Integrated Modem Card (No. 14), N-Sw and N-Sw-SNBU, U.S. and Canada C-2
C-2. 1200-bps Integrated Modem Card (No. 14), N.Sw and N-Sw-SNBU-AA, U.S. and Canada C-3
C-3. 1200-bps Integrated Modem Card (No. 14), Sw-AA/MA, U.S. and Canada C-4
C-4. 1200-bps Integrated Modem Card (No. 14), N-Sw, WT except Canada C-4
C-5. 1200-bps Integrated Modem Card (No. 14), N-Sw-SNBU-AA, WT except Canada C-5
C-6. 1200-bps Integrated Modem Card (No. 14), Sw-AA, WT except Canada C-6
C-7. WTC 1200-bps Integrated Modem Transmit Level Settings (Card No. 14) C-6

C-8. Line Plate Current Adjustment Procedure, WT except Canada C-7
C-9. Line Plate Automatic Adjustment C-8
C-10. Loop Card Jumpering (Card No. 14) (PN 2399082 and 8548788) C-8
C-11. EIA/CCITT Card Jumpering (Card No. 14) (PN 5864660, 5864668) C-8
C-12. DDS Adapter Card Jumpering (Card No. 14), U.S. and Canada Only C-9
C-13. Type A Adapter Coaxial Panel Card and Cable C-10
C-14. Cable from the 01A-A1 Board to Diskette Drive File Control Card C-12
C-15. X.21 Nonswitched Adapter Card Jumpering C-13
C-16. X.21 Switched or Nonswitched Adapter Card Jumpering C-13
C-17. V.35 Card No. 14 Jumpering C-13
C-18. Cable – Type B Coaxial Panel to A1 Board C-14
C-19. Loop Station Connector (LSC) C-15
D-1. 3274 Operator Panel – Model 51C with Digital Data Service (DDS) Adapter or Models 51C/52C with X.21 with/without Encrypt/Decrypt Feature D-3
D-2. 3274 Operator Panel – Models 51C/52C with Loop Attachment D-4
D-3. 3274 Operator Panel – Models 51C/52C with 1200-bps Integrated Modem or External Modem D-5
D-4. 3274 Operator Panel – Models 51C/52C with 1200-bps Integrated Modem with (1) Switched Line with Auto Answer Feature or (2) Nonswitched Line with Auto Answer Feature D-6
D-5. 3274 Operator Panel – Model 51C with 1200-bps Integrated Modem with (1) Switched Line with Manual Auto Answer Feature or (2) Nonswitched Line with SNBU and Manual Auto Answer Feature D-7
D-6. 3274 Operator Panel – Model 51C with 2400-, 4800-, or 9600-bps Integrated Modem D-8
D-7. Operator Panel Component Pin Locations D-9
D-8. Operator Panel Locations (without 2400-, 4800-, or 9600-bps Integrated Modem) D-10
D-9. Operator Panel Assembly Cable Plugging D-11
D-10. Operator Panel Card/Panel/Board Connection Wiring Diagram without 2400-, 4800-, and 9600-bps Integrated Modem Feature (Foldout) FO-7
D-11. Operator Panel Card/Panel/Board Connection Wiring Diagram with 2400-, 4800-, and 9600-bps Integrated Modem Feature (Foldout) FO-9
E-1. 31SD Diskette Drive E-3
E-2. 31SD Diskette E-4
E-3. Diskette Insertion E-5
E-4. 31SD Special Tools E-6
E-5. 31SD Physical Characteristics E-7
E-6. Environmental Characteristics E-8
E-7. Data Formats E-8
E-8. Maximum Number of Formatted Data Bytes E-8
E-9. Diskette Drive Parts E-10
E-10. Cylinder Access E-13
E-11. Control Lines at Connector A1 E-14
E-12. Diskette Insertion and Head Load Operation E-16
E-13. Diskette Operation Sequence E-17
E-14. Write Operation E-18
E-15. Record Update – Write Operation E-19
E-16. Read Data Signals E-19
E-17. File Data Signals E-20
E-18. 31SD Test Pins E-20
E-19. 31SD Control Card E-21
E-20. 31SD Control Card Cable E-21
E-21. Collet/Flat Spring Removal E-22
E-22. Head/Carriage Pressure Pad Removal and Replacement E-24
E-23. Head/Carriage Service Check E-26
E-24. 31SD Control Card E-27
E-25. Head/Carriage Adjustment E-28
E-26. Head/Carriage Removal E-31
E-27. Head/Carriage Replacement E-32
E-28. Solenoid and Bail Service E-35
E-29. Head Gap Adjustment E-37
E-30. Bail Removal E-39
E-31. Solenoid and Idler Removal E-40
E-32. AC Drive Motor Removal E-42
E-33. Stepper Motor E-44
E-34. Stepper Motor Pulley and Clamp Removal and Replacement E-46
E-35. Drive Band Adjustments E-47
E-36. Diskette Speed E-49
E-37. LED Output Check E-50
E-38. LED Removal and Replacement E-51
E-39. PTX Amplifier Service Check E-52
E-40. PTX Removal and Replacement E-54
E-41. Diskette Drive Control Card E-55
E-42. 31SD Control Card and Cable Pins E-56
F-1. IBM 51TD Diskette Drive F-2
F-2. 51TD Diskette F-2
F-3. Diskette Insertion F-3
F-4. 51TD Special Tools F-4
F-5. 51TD Physical Characteristics F-5
F-6. Environmental Characteristics F-6
F-7. Data Formats F-6
F-8. Maximum Number of Formatted Data Bytes F-6
F-9. Diskette Drive Parts F-8
F-10. Cylinder Access F-13
F-11. Control Lines at Connector A1 F-14
F-12. Diskette Insertion and Head Load Operation F-15
F-13. Diskette Operation Sequence F-16
F-14. Write Operation F-17
F-15. Record Update – Write Operation F-18
F-16. Read Data Signals F-19
F-17. File Data Signals F-20
F-18. 51TD Test Points F-21
F-19. 51TD Control Card F-21
F-20. 51TD Control Card Cable F-22
F-21. Collett/Flat Spring Removal F-23
F-22. Head/Carriage Service Check F-27
F-23. Control Card F-28
F-24. Head/Carriage Adjustment F-29
F-25. Head/Carriage Removal F-31
F-26. Head/Carriage Replacement F-33
F-27. Solenoid and Bail Service Check F-35
F-28. Head Gap Adjustment F-37
F-29. Bail Removal F-39
F-30. Solenoid and Idler Removal F-41
F-31. AC Drive Motor Removal F-43
F-32. Stepper Motor Removal and Replacement F-47
F-33. Stepper Motor Pulley and Clamp Removal and Replacement F-49
F-34. Drive Band Adjustments F-51
F-35. Diskette Speed Check F-53
F-36. LED Output Check F-54
F-37. LED Removal and Replacement F-55
F-38. PTX Amplifier Service Check F-57
F-39. PTX Removal and Replacement F-59
F-40. Diskette Drive Control Card F-60
F-41. Diskette Drive Locations and Card Test Points F-61
F-41. Diskette Drive Card Connector Pins F-63

Chapter 1. Introduction

1.1 General

This manual gives the information needed by the Product Customer Engineer to maintain the 3274 Control Unit Models 51C and 52C. This information includes:

- Subsystem Problem Isolation Procedure
- Maintenance Analysis Procedures (MAPs)
- Removal and Replacement Procedures
- Communication Reference Information

Entry into, and use of, the MAPs and Maintenance Procedures should result *only* from performing the sequential steps of the Subsystem Problem Isolation Procedure.

This manual also supplies:

- Illustrations
- 31SD Diskette Drive Maintenance
- 51TD Diskette Drive Maintenance

In most cases, the information supplied isolates a problem to a defective or loose field replaceable unit (FRU), cable, or connector. If the problem cannot be isolated and repaired by performing the Subsystem Problem Isolation Procedure and associated MAPs and Maintenance Procedures, request assistance from the next level of the support structure.

1.2 Maintenance Approach

The maintenance approach to 3274 problems is illustrated in Figure 1-1. This approach involves performing the following sequential steps of the Subsystem Problem Isolation Procedure:

Step 1 – Obtain the *3274 Problem Report Form* from the operator. This form is used by the operator to record the status (indications) of the 3274 when a problem is encountered. If the form has not been completed, perform the procedure described in the *Problem Determination Guide (PDG)*, GA27-2850, and record the necessary information.

Steps 2 through 9 – Steps 2 through 9 must be performed sequentially. If the problem is encountered by these steps, you will be directed to an FRU replacement figure (chart), a MAP, or a maintenance procedure. When the problem has been isolated and repaired, the Machine Checkout MAP A100 must be used to verify correct operation. Steps 2 through 9 include the following tests and checks:

- Step 2 – Verification that the DC Power light is on
- Step 3 – Bus Test
- Step 4 – Internal tests/IML load
- Step 5 – Device driver/receiver check
- Step 6 – Display symbol/error suffix check
- Step 7 – Operational indicator check
- Step 8 – Host tests
- Step 9 – Voltage checks

Step 10 – If the problem was not encountered by Steps 2 through 9, this step directs you to repeat Steps 2 through 9. If the problem is not encountered while Steps 2 through 9 are being repeated, Step 11 is performed.

Step 11 – Step 11 first directs you to the Symptom Repair List. If this list does not assist you in isolating and repairing the problem, Step 11 directs you to request assistance. This assistance should be the support structure and/or local assistance, which may consist of data searches, diagnostic assistance, and/or on-site assistance.

The first step will normally be a data search, if available.

Diagnostic assistance may be performed by the support structure and/or locally. The method used should be that which will resolve the problem most rapidly.

Initial on-site assistance will usually be local.

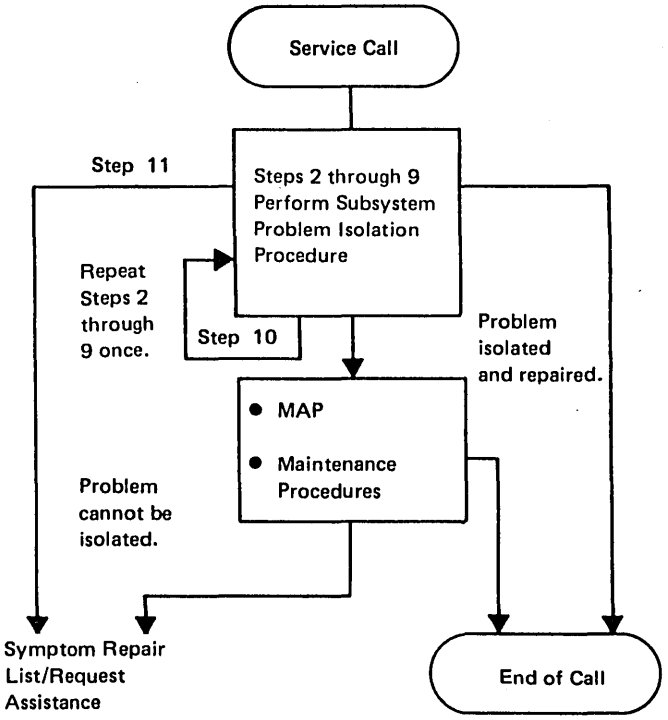

Figure 1-1. Maintenance Approach

1.3 Field Replaceable Unit (FRU) Locations

Before using the service information in this manual, you must identify the machine model number and the 01A-A1 logic board type. This information is needed to identify the FRU locations when using the MAPs and maintenance procedures.

1.3.1 Machine Model Number

The machine model number (51C or 52C) is located on the machine identification plate. See Figure 1-2. General physical locations and diskette insertion are also shown in this figure.

1.3.2 01A-A1 Logic Board

The type and layout of the 01A-A1 logic board is determined by the machine model number. These boards are shown in Figures 1-3 through 1-6 as follows:

Figure 1-3	Model 51C with/without the Category B Device Attachment Feature. Machines with the Category B Device Attachment have the B coaxial panel and have cards in positions B, C, D, E, and F.
Figure 1-4	Model 52C (Kanji/Chinese) with storage greater than 64K. The 52C is a Kanji (Japanese/Chinese) model control unit.
Figure 1-5	Model 51C without 2400-, 4800-, and 9600-bps Integrated Modem.
Figure 1-6	Model 51C with 2400-, 4800-, and 9600-bps Integrated Modem.

Warning: When the board is in the service position, the card/connector rows (1, 2, 3, 4, 5, 6) are inverted. Be careful when identifying the correct position of any card or connector.

1.3.3 Card Numbers

To identify the logic cards in the different types of 01A-A1 boards, the MAPs use card numbers. The card number and the board type are used to index a card location chart (Figure 1-7) to determine the actual card location. Foldout illustrations at the rear of this manual (Figure A-12, pages FO-3 and FO-5) containing the 01A-A1 board layouts and card location charts are provided for your convenience when using the MAPs.

1.3.4 Operator Panel

Basic operator controls for 3274 Models 51C/52C without communication features (loop, 1200-bps Integrated Modem, etc.) are shown in Figure 1-8. See Appendix D for operator panel locations, switch functions, indicator descriptions, panel layouts, and wiring diagrams.

A functional description of these basic controls follows.

1.3.4.1 IML Options

Three IML options are made available by the ALT switch, a three-position pushbutton switch. The three positions are 0 (normal), ALT 1, and ALT 2. When IML is pressed, the position of ALT determines the IML control-storage entry point. The operation is variable, depending on which diskette is installed. The following describes the operation with the system diskette installed.

Normal: With ALT in the normal (not depressed) position, pressing and holding IML will cause a Bus Test to be performed. Releasing IML after a Bus Test will cause the IML Test to run. At the successful completion of the IML tests, Operational Code is loaded. The IML tests require approximately 1 minute to execute. Successful completion is indicated by all indicators being on. All indicators remain on while the Operational Code is being loaded, and all turn off upon completion of this load. The operational code load takes approximately 45 seconds.

ALT 1: Momentarily pressing IML while holding the ALT switch in ALT 1 permits the Operational Code to be loaded directly (bypassing IML tests). This load procedure should be used only following a normal IML attempt, and is intended for those situations where the normal IML fails but useful work can still be performed by the Operational Code.

Notes:

1. *A normal IML attempt is required to initialize memory and bring the 3274 up. Press IML with ALT in the normal position before any other startup method is attempted.*
2. *Only an IBM 3178, 3278, or 3279 Display can be attached to port 0 during IML.*

ALT 2 without 2400-, 4800-, and 9600-bps Integrated Modem Feature: The Modem Wrap Test can be initiated by using the ALT 2 function as well as the Normal IML Test (with wrappable modem). Momentarily pressing the IML pushbutton while holding the ALT switch in the ALT 2 position invokes an extended Modem Wrap Test. Some types of modems require manual intervention to set up for wrap testing. For a wrappable modem, the test checks the transmission path (Transmit and Receive Data lines) to and from the modem. Modem clocking is required to run this test successfully, and a missing or defective modem clock, or a Wrap Test failure, will indicate a 0111 failure code. For a nonwrappable modem, the data wrap path is to and from the Test/Operate switch at the end of the communication cable. The procedure for ALT 2 with nonwrappable modem is in Chapter 5, paragraph 5.3. The Modem Wrap Test requires approximately 1 minute to complete.

ALT 2 with 2400-, 4800-, and 9600-bps Integrated Modem Feature: See paragraph 5.4 for a description of the ALT 2 functions as related to Integrated Modems.

1.3.4.2 Indicators (8 4 2 1)

The four lights (8 4 2 1) on the panel are the operational indicators. These indicators first serve as Bus and Lamp Test indicators: if all indicators are on while the IML pushbutton is pressed, a successful Bus and Lamp Test is indicated. When the IML pushbutton is released, all lights go out and the 3274 proceeds to execute the IML tests. During IML, these lights indicate IML test failures. Test segments are run sequentially, and the particular segment running is indicated by the lights in 8 4 2 1 code. When a failure is detected, the test stops and the failing test number is displayed in the operational indicators (8 4 2 1).

While Operational Code is running, the lights indicate the last recoverable error encountered. The problem-isolation sequence uses this data from IML tests and from operational tests.

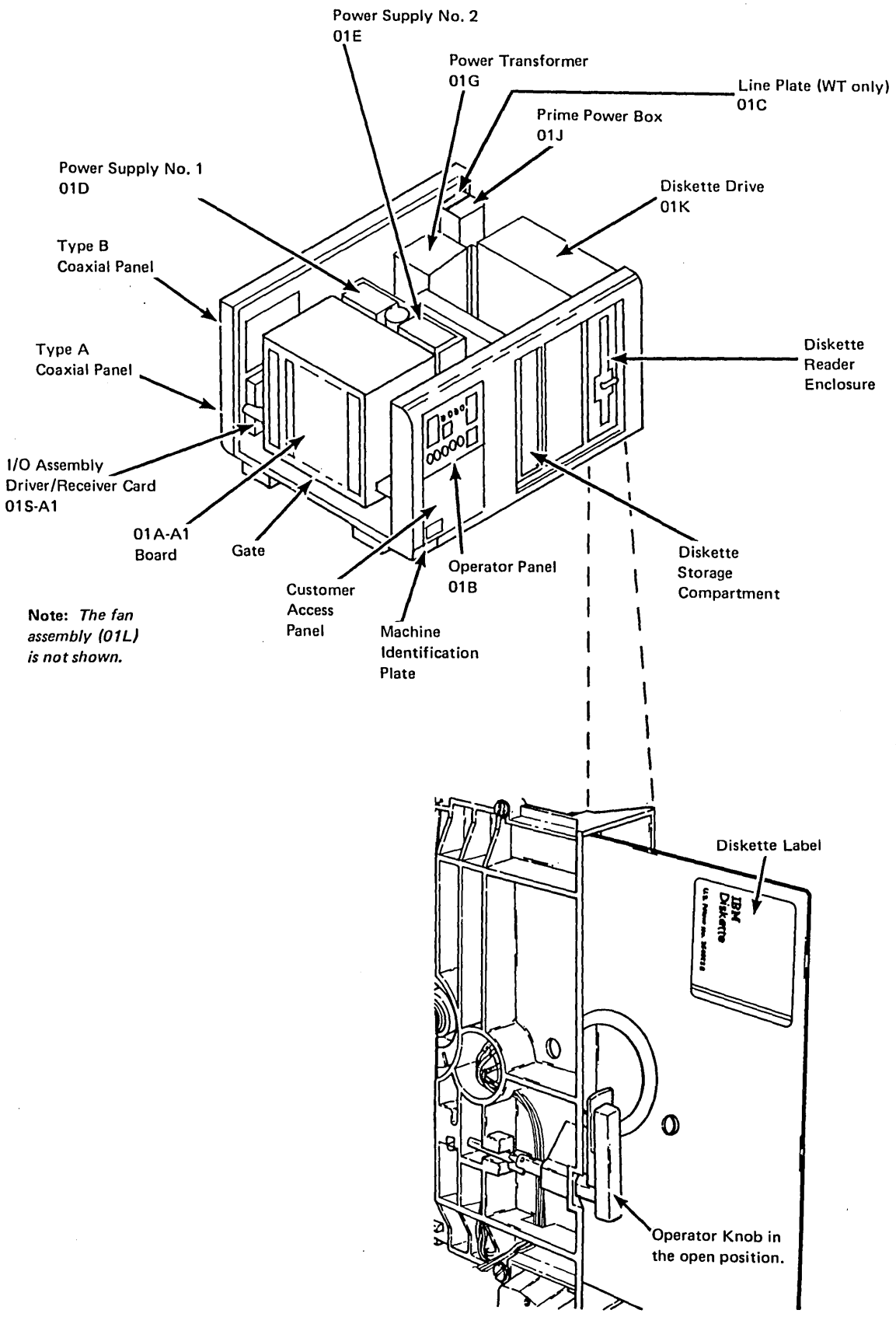

Figure 1-2. 3274 Models 51C/52C Locations

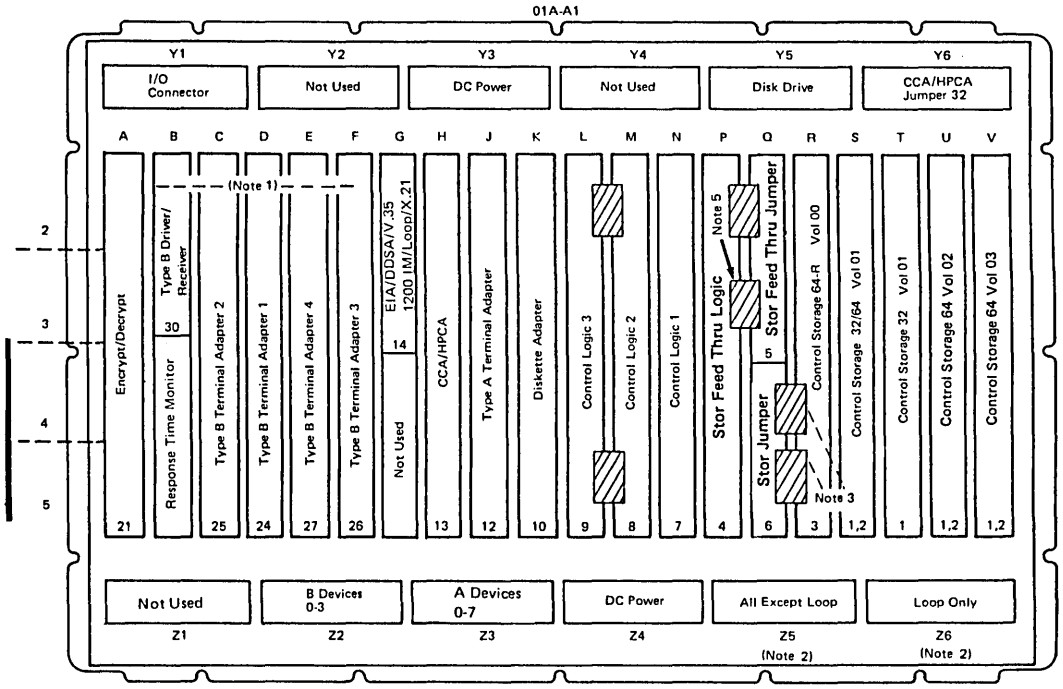

Notes:

1. *Category B device adapter cards.*
2. *Cable is in Z5 or Z6 depending upon interface installed.*
3. *Not present when control is equal to 64K.*
4. *Type A Driver/Receiver Card No. 28 located behind the I/O coaxial panel.*
5. *Top card connector position (X) is not required when storage is 64K. Your machine may already have connector installed.*

Figure 1-3. 01A-A1 Board – Model 51C (with/without Category B Devices – PN 5699828

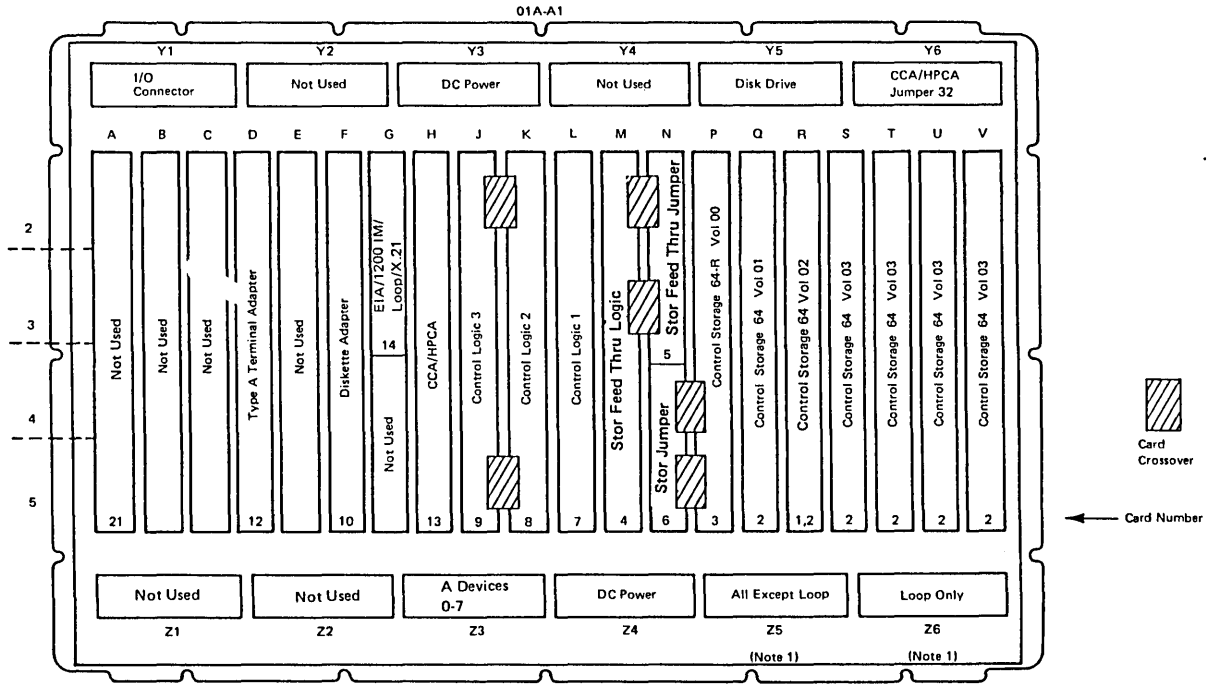

Notes:

1. *Cable is in Z5 or Z6 depending upon interface installed.*
2. *Type A Driver/Receiver Card No. 28 located behind the coaxial panel.*

Figure 1-4. 01A-A1 Board – Model 52C (Kanji/Chinese) – PN 5643330

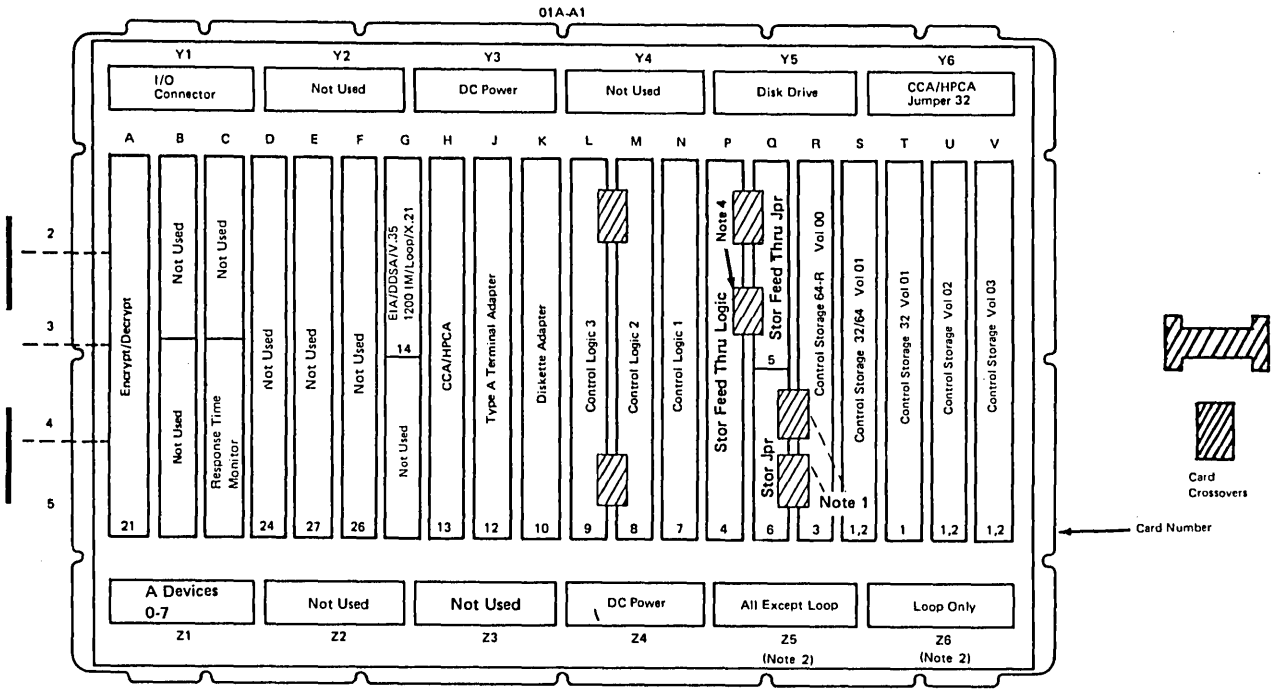

Notes:

1. *Not present when control is equal to 64K.*
2. *Cable is in Z5 or Z6 depending upon interface installed.*
3. *Type A Driver/Receiver Card No. 28 located behind the I/O coaxial panel.*
4. *Top card connector position (X) is not required when storage is 64K. Your machine may already have connector installed.*

Figure 1-5. 01A-A1 Board – Model 51C without 2400-, 4800-, and 9600-bps Integrated Modem – PN 5643329 or 6226635

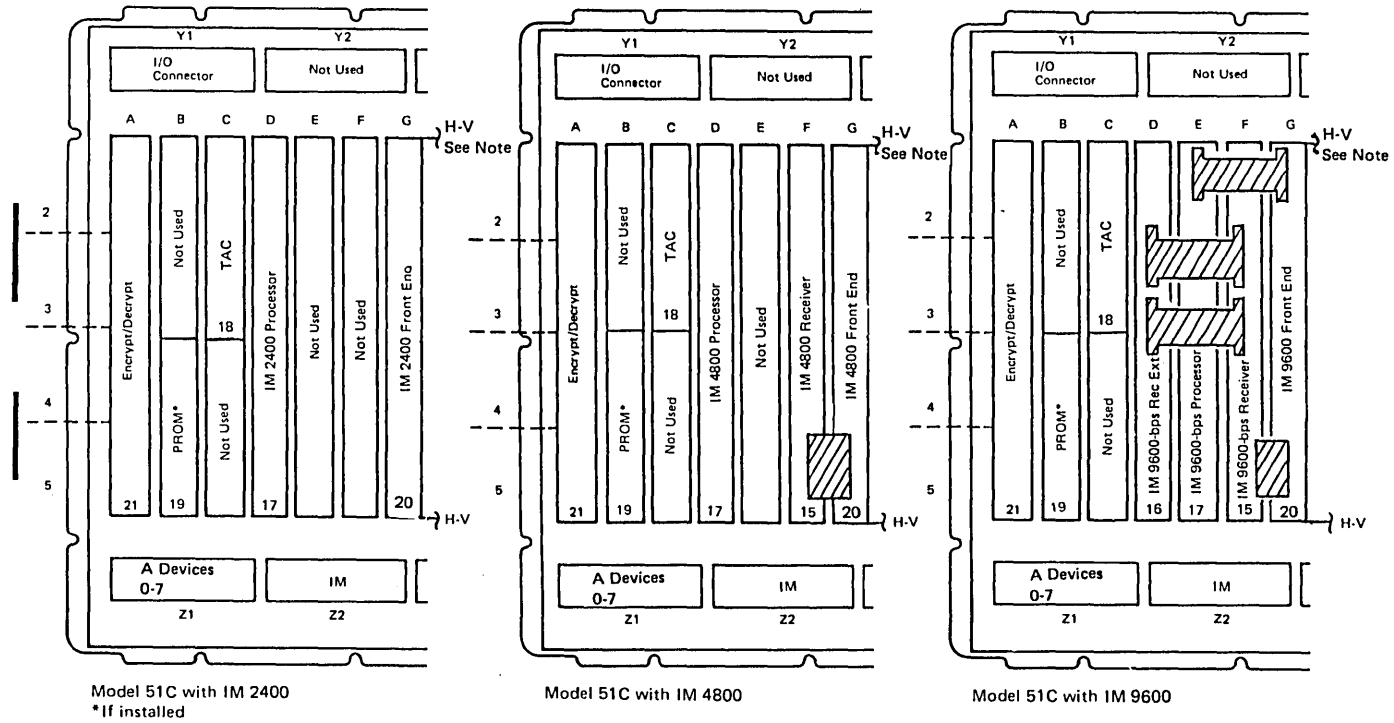

Note: *Sockets H–V are the same as the board layout in Figure 1-5.*

Figure 1-6. 01A-A1 Board – Model 51C with 2400-, 4800-, and 9600-bps Integrated Modem – PN 563329 or 6226635

Card Number	Card Function	51C	52C Kanji
1	Control Storage 32 (Note 1)	Note 1	Note 1
2	Control Storage 64 (Note 1)	Note 1	Note 1
3	Control Storage 64-R (Note 1)	Note 1	Note 1
4	Storage Feed Thru (4W) or Storage Logic (4W) (Note 2)	01A-P2	01A-M2
5	Storage Feed Thru (2W) or Storage Jumper (Note 2)	01A-Q2	01A-N2
6	Storage Jumper (Note 2)	01A-Q4	01A-N4
7	Control Logic 1	01A-N2	01A-L2
8	Control Logic 2	01A-M2	01A-K2
9	Control Logic 3	01A-L2	01A-J2
10	Diskette Adapter	01A-K2 (Note 3)	01A-F2
11	Response Time Monitor w/wo Type-B Board	01A-B4	----------
11	Response Time Monitor w/wo 24, 48, 96 IM Board	01A-C4	----------
12	Type A Terminal Adapter	01A-J2	01A-D2
13	CCA/HPCA	01A-H2	01A-H2
14	EIA/DDSA/1200 IM/Loop/X.21/V.35 (Note 4)	01A-G2	01A-G2
15	2400-, 4800-bps IM Receiver	01A-F2	----------
16	9600-bps IM Receiver Ext	01A-D2	----------
17	2400-, 4800-bps IM Processor	01A-D2	----------
17	9600-bps IM Processor	01A-E2	----------
18	2400-, 4800-, 9600-bps TAC (Note 4)	01A-C2	----------
19	2400-, 4800-, 9600-bps PROM	01A-B4	----------
20	2400-, 4800-, 9600-bps IM Front End	01A-G2	----------
21	Encrypt/Decrypt (See Note 5)	01A-A2	----------
22	File Control (located in the diskette drive)	01A-K	01A-K
23	Not Used	----------	----------
24	Type B Terminal Adapter 1	01A-D2	----------
25	Type B Terminal Adapter 2	01A-C2	----------
26	Type B Terminal Adapter 3	01A-F2	----------
27	Type B Terminal Adapter 4	01A-E2	----------
28	Type A Driver/Receiver (Note 6)	01S-A1	01S-A1
29	Not Used	----------	----------
30	Type B Driver/Receiver	01A-B2	----------
31	Not Used	----------	----------
32	CCA/HPCA Interface Jumper	01A-Y6	01A-Y6

Notes:

1. *For card locations, see the board storage layout (Figure 2-4).*
2. *With some part numbers it is possible to plug card in backwards. To ensure correct plugging position, see Figure A-11.*
3. *Jumper should not be plugged on this card. This jumper is for manufacturing test purposes only.*
4. *Jumper or switch setting required (see Appendix C).*
5. *Card removal destroys the master key (see paragraph 6.1.3).*
6. *Located behind the I/O coaxial panel.*

Figure 1-7. Card Location Chart

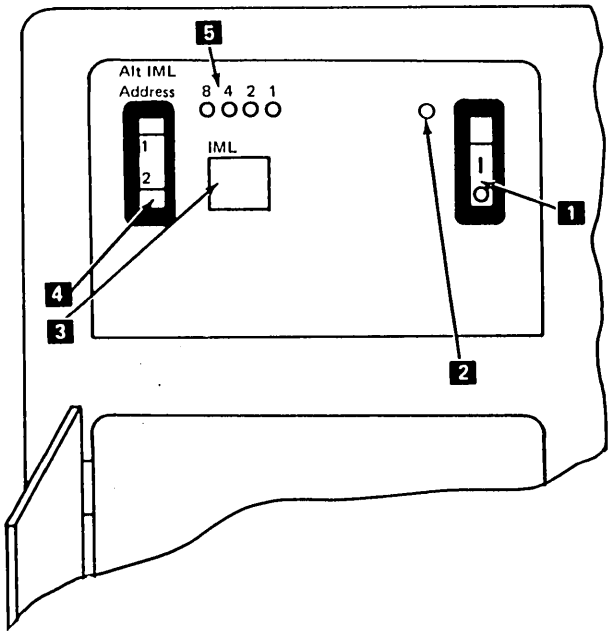

Ref	Description
1	On/Off switch: [1] = On; [O] = Off.
2	On indicator: Indicates the 3274 is on.
3	IML (Initial Machine Load) pushbutton: Pressing and holding causes a basic test to run. When the pushbutton is released, IML tests start. At completion, the machine is loaded.
4	Alt IML Address switch: • 1: Holding, while momentarily pressing the IML pushbutton, bypasses the tests and loads the machine directly. Use only after normal IML fails. • 2: Holding, while momentarily pressing the IML pushbutton, invokes adapter and wrap tests. **Used Only with Integrated Modems** • 3: Holding the ALT IML Address switch in ALT 2 will cause the Modem Self-Test to be initiated and repeated approximately every 4 seconds until the switch is released.
5	8 4 2 1 indicators: These indicators light while the IML pushbutton is held. During IML, they follow the test sequence. At completion, they go out. During operation, they indicate operational status.

Figure 1-8. 3274 Models 51C/52C Basic Operator Controls

Chapter 2. Subsystem Problem Isolation Procedure

The steps in the Subsystem Problem Isolation Procedure must be performed in sequence. If you encounter a problem when performing these steps, you will be directed to an FRU replacement figure (chart), a MAP, or a maintenance procedure. When the problem has been isolated and repaired, the Machine Checkout MAP (A100) must be used to verify correct operation.

Note: *When servicing Models 51C and 52C, observe the applicable safety notices listed under "Safety Notices," in the front of the manual.*

Step 1 – Using the Isolation Procedure

a. Start with a completed Problem Report Form. Figure 2-1 shows a sample 3274 Problem Report Form.

   Note: *If the customer has not completed the form, follow the* 3274 PDG *procedure before starting the Subsystem Problem Isolation Procedure. Refer to the Problem Report Form while following the Subsystem Problem Isolation Procedure.*

b. If a problem is encountered during installation or customizing, or after installing a Miscellaneous Equipment Specification (MES), go to MAP A150. Installation and customizing cannot be considered completed until the 3274 has operated online successfully.

c. Follow this problem isolation flow *sequentially* until you have fixed the problem, or use your support structure for aid if the problem is not corrected. Go to the next step if the step you are performing does not fix the problem or does not apply.

   Note: *If you are in a repetitive loop, request assistance from the next level of the support structure.*

d. The IML tests do not check the driver/receiver cards. (Step 5 will assist you in isolation of a defective driver/receiver card.) If this is a single-device failure, it is assumed that the maintenance procedure for that device has been performed.

   Warning: For integrated modem multipoint attachment, when the 3274 I/O telephone cable is unplugged, the telephone socket must be terminated with 600-ohm resistors. The 600-ohm terminating plug (shown in Figure 5-11, Part 1 of 2) can be used.

e. See Chapter 5 for communication reference data, Appendixes A through D for location drawings, power information, board layouts, and cable drawings, and Appendix E for 31SD or Appendix F for 51TD diskette drive maintenance information.

f. Go to Machine Checkout MAP A100 after this fix. Go to the next step if this step did not fix your problem or does not apply.

Step 2 – Power Test

a. Check the DC On light: if it is off, go directly to Power MAP A120.

b. If all the operational indicators (8 4 2 1) are on:

   (1) Check for loose cables in the operator panel assembly. See Appendix D and Figure D-9.

   (2) Replace the operator panel indicator card.

Step 3 – Bus Test

a. If the Bus Test fails, go directly to Bus Test MAP A10.

Note: *A successful Bus Test is indicated if all the operational indicators (8 4 2 1) are on while the IML pushbutton is pressed and held, and if all the indicators go off when IML is released.*

Go to the next step if this step did not fix your problem or does not apply.

Step 4 – Internal Tests

Note: *The IML diagnostic tests run automatically when the 3274 is powered on and when the IML pushbutton is pressed and released. During these tests the 8 4 2 1 indicators should sequence 0001, 0010, 0011, etc., ending with all 8 4 2 1 indicators on. The indicators remain on as the operational code is loaded, and go off when the tests run successfully. A failure is indicated when the 8 4 2 1 indicators flash or display the same count continuously.*

If the operational code detects a failure, a failing code appears in the 8 4 2 1 indicators after the operational code is completely loaded (all indicators off). The indicators may display this code alternately or continuously. Depending on the diskette level, some codes may flash for 5 seconds and then alternate with another continuous code for 3 seconds. Use the flashing code in determining the failure code in procedures, MAPs, etc.

After a successful loading of the operational code, all terminals attached to the 3274 that are ready should display a [4] in the Operator Information Area (OIA).

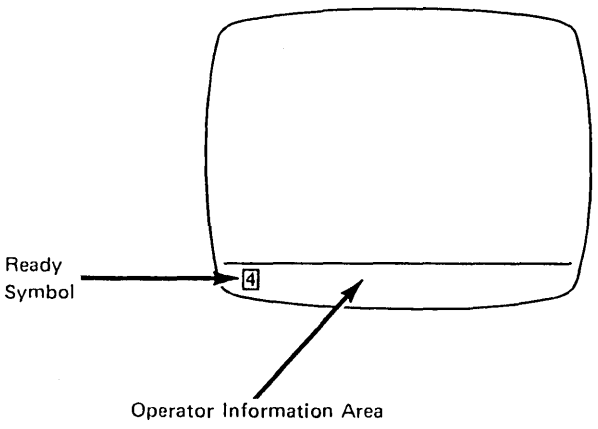

A Normal Display in the Ready State

3290 Display Sequence

a. When the 3290 is powered on, the Basic Assurance Test (BAT) starts and the BAT sequence numbers (binary count) appear in the OIA. If a failure occurs, additional numbers may appear in the OIA. The correct end code is equal to 1000.

b. When the BATs are completed and the 3274 is ready with the proper load diskette inserted, communication with the 3274 is established and a ☐ appears in the OIA.

c. Microcode loading from the control unit starts. Then test numbers will appear in the OIA. If a routine number remains displayed for more than 30 seconds, this indicates a failure in that routine.

d. When the microcode loading is done, a [4] (or a 〈 2 〉, if previously in setup mode) will appear in the OIA. The time between power-on and the appearance of the [4] in the OIA should not exceed 2 minutes.

Internal Test Procedures

a. For a 3274 with either the 2400-, 4800-, or 9600-bps Integrated Modem feature, switch power off and then on.

b. For a 3274 without an Integrated Modem feature, press and release the IML pushbutton.

c. Figure 2-2 can be used to determine the failing area. Also, see item d.

Operational Indicators	8	4	2	1
Error Code	X	X	X	X

d. Use Figure 2-3, which shows error codes correlated to all possible card failures in order of probability. Change cards according to probability. If the card swap does not correct the problem, go to Power MAP A120, step 049, entry point F (measure voltages).

e. Isolate the control-storage failure to a specific control-storage card or cards by using the code that appears on display 0 or in the 3274 8 4 2 1 indicators (Type A).

The system diskette or load diskette code level determines how to display the failing 0101 code and card code in either of the following methods:

Only at display location A0
Code 0101 followed by XXY indicates a control storage failure, including the failure storage card and module. See Figures 2-4 and 2-5.

At the 3274 8 4 2 1 indicators and display A0
The 0101 code will flash for 5 seconds and another code representing additional card failures will be displayed continuously for 3 seconds. The codes displayed at the 3274 will repeat. See Figure 2-4.

If the 3274 is newly installed or has been recustomized, verify that 3274 configuration response number 113 agrees with the configuration or data card and with the actual 3274 storage capacity (see Figure 2-4). The configuration data card is stored in the 3274 access door pocket.

f. If the IML tests fail and the card swap does not correct the problem, go to Power MAP A120, step 049, entry point F (measure voltages).

g. Do *not* go to the next step unless the IML tests run successfully.

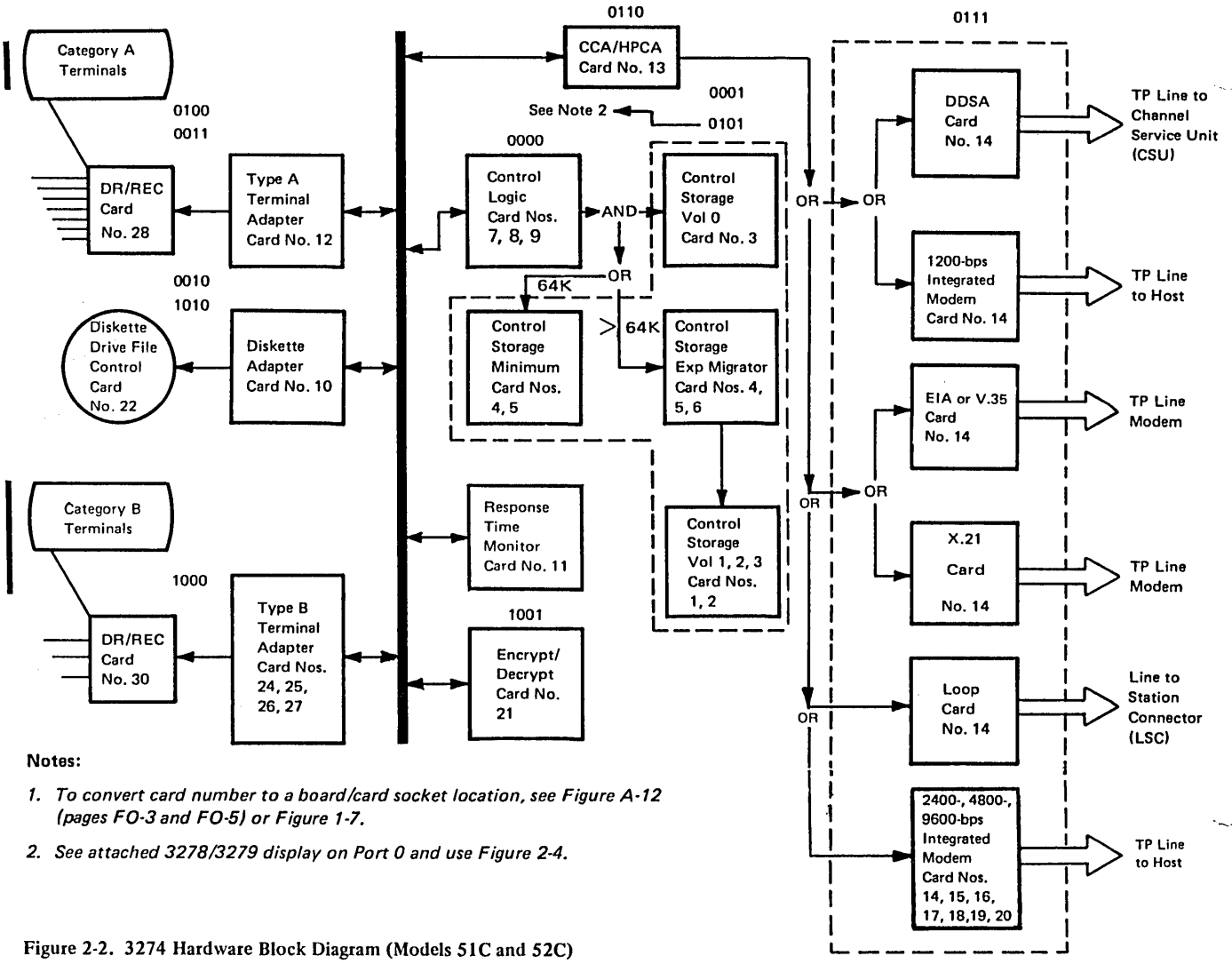

Notes:

1. *To convert card number to a board/card socket location, see Figure A-12 (pages FO-3 and FO-5) or Figure 1-7.*
2. *See attached 3278/3279 display on Port 0 and use Figure 2-4.*

Figure 2-2. 3274 Hardware Block Diagram (Models 51C and 52C)

Use for Errors during IML

This figure shows error codes (fail codes) correlated to all possible card failures in order of probability. To convert the card number to actual board/card socket location, see Figure A-12 (FO-3, FO-5) or Figure 1-7. If codes 0101, 0110, and 0111 are alternating, use the flashing code as the failure indicator.

IML Fail Code	Card Reference Number	Map, Reference Figure, and Notes
0000[1]	7, 8, 9, 3, 1, 2, 4,[2] 5,[2] 6,[2] 11, 12, 13, 27, 10, 21, 14, 25	Go to MAP A20 if card-swapping did not fix problem or if not all cards are available.
0001[1]	3, 7, 4,[2]	Check for proper diskette.[3]
0010[4]	10, 22, 27, 26, 24, 11, 12, 13, 14, 9, 21	Go to MAP A40 if problem still exists.[3]
0011[4]	12, 13, 14, 24, 28, 10	Check for loose card in socket Y6. Go to MAP A50.
0100[4]	12, 13, 28	Go to MAP A50.
0101[5]	1, 2, 3, 4,[2] 5,[2] 7, 9 Do this first →	See Figure 2-4.
0110[5]	13, 14	See Step 8 in this chapter and Chapter 5, paragraph 5.3 (Wrap Test).
0111[5] or	13, 14[6] w/o 2400-, 4800-, or 9600-bps Integrated Modem feature	See Chapter 5, paragraph 5.3 (Wrap Test).
0111[5]	With 2400-, 4800-, or 9600-bps Integrated Modem feature	See Chapter 5, paragraph 5.4.5.6.
1000[4]	24, 25, 26, 27, 30	Go to MAP A90 (Model 51C only).
1001[4]	21	The customer security administrator must reload the master key after the card is removed and replaced. This procedure and the associated encrypt/decrypt information are contained in Chapter 6.
1001-1110[7]		The 3274 does not have the required storage. Verify storage cards. See Figure 2-4. Verify Customization Response 113. Occurs for Configuration Support D and above.
1001-1010[7]		Incorrect system diskette or load diskette for Model 51 hardware. Verify system diskette or load diskette. Occurs for Configuration Support D and above.
1110[1]		The 3274 control storage does not match customization response 113. Occurs when performing an ALT-1 operation. Verify that storage cards are correct. See Figure 2-4.
1010[4]	10, 13,[8] 1, 2 – Do this first →	Change diskette drive file control card (card No. 22) and system diskette.[9]
1011[4]	11	If the board has been replaced, verify that board wiring has been properly modified. See Figure 4-14.
1101[4]	None	Uncustomized system diskette.
1111[4]	----------	Operational code failed to load correctly. Try spare system diskette.

[1] The 8 4 2 1 indicators are continuously displaying this code.

[2] With some part numbers it is possible to plug this card in backwards. To ensure the correct plugging position, see Figure A-11.

[3] If, during use of a customized system diskette, a successful ALT 1 IML can be performed, the operational code was properly loaded from the diskette. This eliminates the diskette, cables, motor rotation, fuses, and voltage as possible causes.

[4] Code is usually flashing (alternately on/off).

[5] Code is usually flashing, but may alternate between a flashing and a continuous code.

[6] If code 0111 is displayed continuously, replace card numbers 24, 25, 26, and 27.

[7] The two codes are alternating.

[8] If HPCA installed.

[9] This code can occur during any IML sequence or during operational code load.

Figure 2-3. Failure Code to Card or MAP Entry

Display 0 (Type A)

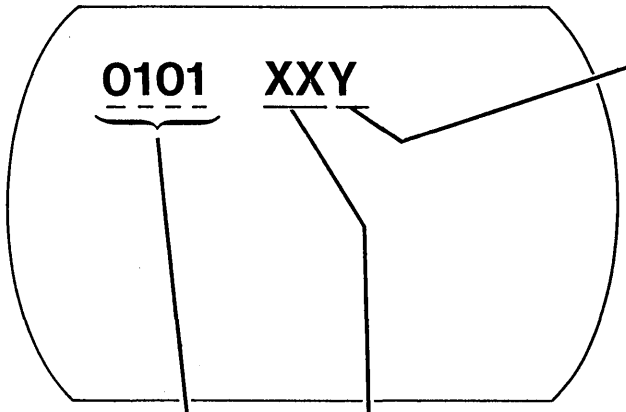

Indicates Failing Control Storage Card: See Note 3

Y =

		Model 51C	52C
0000	0	R2	P2
0001	1	S2	Q2
0010	2	T2	–
0011	3	U2	S2
0100	4	V2	T2
0101	5	–	U2
0110	6	–	V2
0111	7	–	–
1000	8	Note 2	
1001	9	• P2, Q2, Q4, R2, S2 • Check customization responses 113, 151 • Verify extra wire from Q2G02 to Q2G12	N2, N4 M4, P2 Q2

Indicates control storage failure (Flashing)

Indicates Failing Control Storage Module (displayed continuously)
XX = 01 to 18 (module number) See Figure 2-5 for card module layout.
XX = 19 (multiple module failure) See Note 1.
Example: XXY = 011
Failing module = 01
Failing card could be S2 or Q2 depending on board type.

Alternating Fail Code

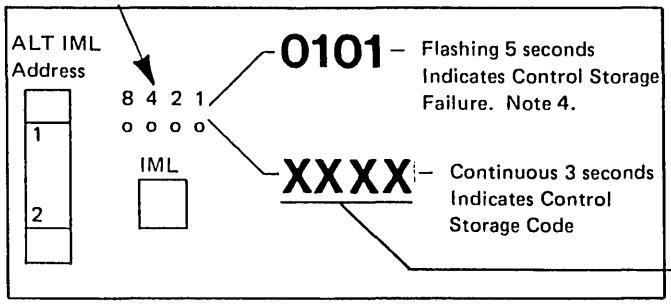

Card Type	Card Number
32	1
64	2
64R	3

Model 51C With/Without Type B Adapter

Storage	Location: Volume								Configuration Response 113
		02	01	01	00				
	V2	U2	T2	S2	R2	Q2	Q4	P2	
64 Base					64R	**		**	A000
96 Ext Funct Store (3630)				32	64R	*	*	*	B000
128 Ext Funct Store (3632) or (1800)				64	64R	*	*	*	D000
128 Ext Funct Store (3630) (3631)			32	32	64R	*	*	*	C000
192 Ext Funct Store (3632) (3650) or (1800) (3650)		64		64	64R	*	*	*	DA000
192 Ext Funct Store (3630) (3631) (3650)		64	32	32	64R	*	*	*	CA000

*Storage Jumper cards and Storage Logic card are required for above 64K.
**Base Storage Feed Thru cards are required for 64K.

Model 52C (Kanji/Chinese)

Storage	Location: Volume										Configuration Response 113
	03	03	03	03	02	01	00				
	V2	U2	T2	S2	R2	Q2	P2	N2	N4	M2	
256 Base			64	64		64	64R	*	*	*	D300
384 Front Storage Expansion (2879)	64	64	64	64		64	64R	*	*	*	D400

*Storage Expansion (1802) Storage Jumper cards and Storage Logic card are required for above 64K.

Notes:

1. *XX = 19 (multiple modules) — This code does not indicate the failing module.*
2. *Y = 8 — Customizing or undetermined storage error. Isolate to storage card.*
3. *If the card indicated by "Y" does not exist in the 3274, reseat/replace card P2 and Q4 (Model 51C), or card M4 and N4 (Model 52C).*
4. *A repeating 0101 code indicates a control storage card error code of 0000.*

Figure 2-4. Control Storage Error Codes/Card Locations

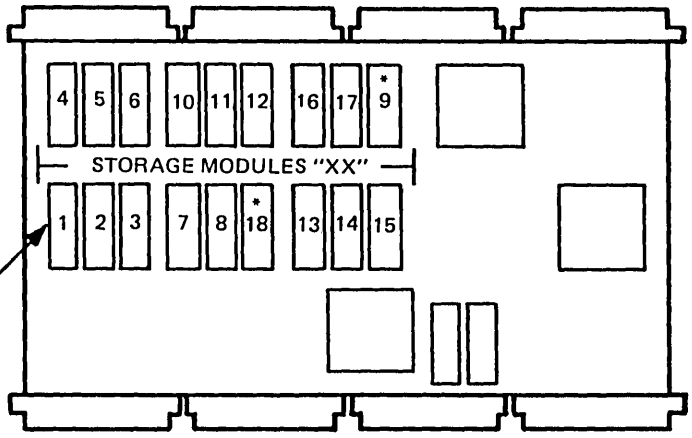

Control Storage Card 32K (Card No. 1)

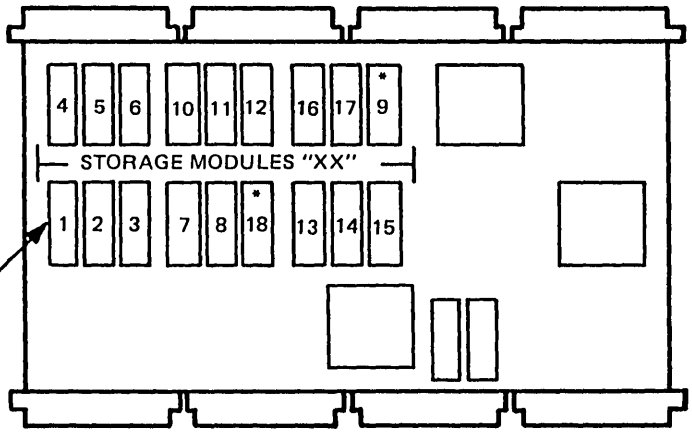

Control Storage Card 64K (Card No. 2)

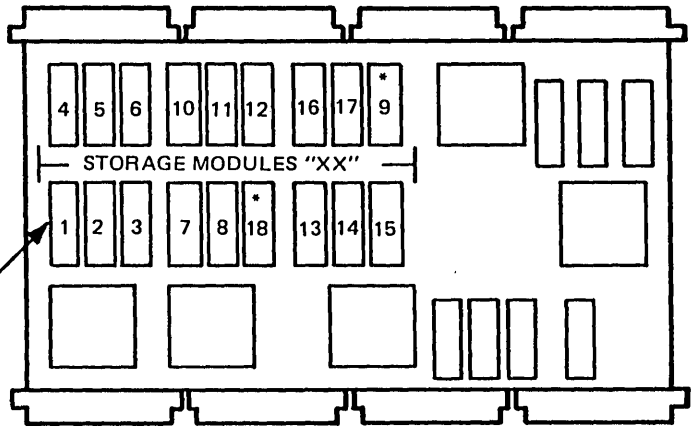

Control Storage Card 64K-(R) (Card No. 3)

*When XX = 9 or 18, the failing module could be either number 9 or 18.

Figure 2-5. Control Storage Card Layouts

Step 5 – Device Adapters – Driver/Receiver

a. Category A Device Failure (one or all devices fail)

(1) Replace the type A terminal adapter card No. 12 and driver/receiver card No. 28 (located in the coaxial panel).

(2) Reseat device A cable A1-Z1 or Z3.

(3) If this is a new installation, a missing Device Ready [4] or a missing Downstream Load [ ] on a 3290 (in the Operator Information Area) may be caused by customization response 112, 116, or 117 (number of terminals attached).

(4) One device fails – go to step c.

b. Category B Device Failure (one or all devices fail)

(1) Replace the type B terminal adapter card Nos. 24, 25, 26, and 27, and driver/receiver card No. 30.

(2) Reseat device B cable A1–Z2.

(3) All devices still fail. This could be caused by one disabled Category B device. Perform step d (Device Summary Status, Test 3); if line 2 (status of each display) indicates one dash (–), isolate problem to that 3277 device.

(4) One device fails – go to step c.

c. Device Problem Isolation – Category A or B Devices

(1) To determine the failing 3274 port location, perform step e (Device Summary Status, Test 3), or see the customer's Device Cable Attachment Form to convert the failing network address (device) to the actual coaxial port location.

(2) Check the coaxial cable device for defects. Cables to the same type of device can be interchanged (3278 for 3278, 3287 for 3287, etc.) to assist in problem isolation. The coaxial port panel is shown below.

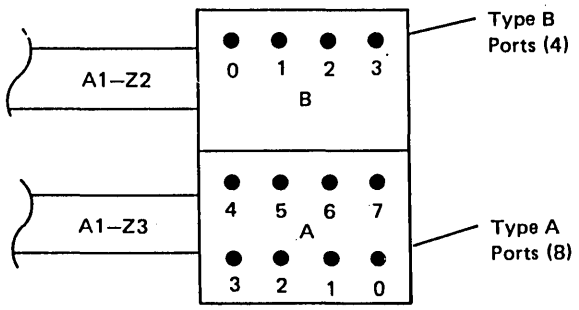

Coaxial Panel, Port Layout

(3) Check the internal device A and B cables for defects, using Figure C-13 for A devices and Figure C-18 for B devices.

d. Isolation Procedure for a Coax Problem

If possible, exchange the suspected coaxial cable with the cable at a known working port location. A device POR is required, after the cables are interchanged, for the control unit to recognize the change. For a display, set the Normal/Test switch to Test, then back to Normal. (However, on a 3290 display, turn power off, then on, and wait up to 2 minutes.) To isolate a failing display coaxial cable, verify that the Ready [4] symbol, or [ ] symbol for a 3290, is displayed.

Warning: When device cables are being exchanged and the devices are different or the screen size or features are not the same, addressing problems may occur which can affect system operation.

Retry the failing operation or run the Test 0 display pattern. To run Test 0, see *3274 Models 51C, 52C, and 61C Maintenance Concepts*, SY27-2528.

Notes:

1. *Perform Step 5, d(1) and d(2) to isolate a cable problem.*
2. *It is possible to have unassigned Type-A ports if port addresses were individually configured. Run the /3 test, and check for x in line 2. See Step 5, item e, Example C.*

(1) Resistance Test (to attached device). See Figure 2-6 (B).

Note: *The coax signal and shield are transformer-coupled at the device driver/receiver. Resistance test applies to Category A terminals only.*

– Power does not have to be turned off on either the 3274 or the attached device.

– Disconnect the cable from the 3274 coax panel. Measure the resistance from the center pin of the connector, on the cable end, to the outer case of the connector. Use the R x 1 range on the meter. The presence of 3274 driver/receiver signals will not affect the test.

Is the resistance between 1 and 250 ohms?

Y

N

- If the resistance is too high or infinite, check for an open or a faulty connection.
- If the resistance is zero, check for a signal-to-shield short.

Reconnect the cable at the 3274 coax panel. Power does not have to be turned off at the 3274.

(2) Resistance Test (To 3274). See Figure 2-6, (A).

– Disconnect the coaxial cable from the attached device. Measure the cable resistance again, but at the device cable end, using the R x 100 range on the meter.

Is the resistance between 1.8K and 2.6K ohms?

Y — N

Resistance higher than 2.6K ohms indicates an open cable, a bad cable connector, or a defective driver-receiver card. If zero, check for a signal-to-shield short.

- Reconnect the cable at the device.
- The DC cable resistance test may not detect a connector defect such as low resistance in the range of 200-300 ohms unless the exact cable length is known. The reflective sine wave test in the *3274 Models 51 and 61 Maintenance Concepts* manual, SY27-2528, should help detect this defect.

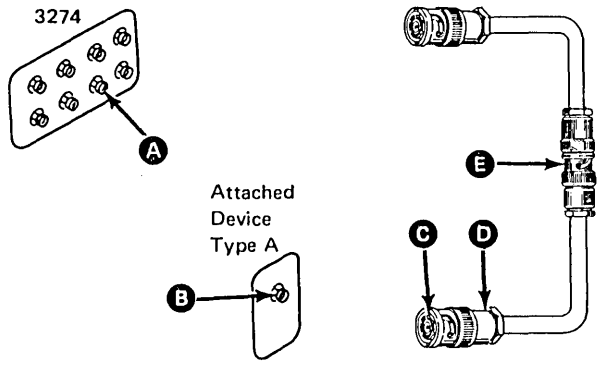

A Driver/Receiver circuit—1.8K to 2.2K ohms

B Driver/Receiver circuit—1.0 to 3.0 ohms

C Coaxial center conductor — 44 ohms/300m (1000 ft), 1525m (5000 ft) max

D Coaxial shield (outer) — 2.6 ohms/300m (1000 ft), 1525m (5000 ft) max

E Your cable configuration may contain a cable connection.

Figure 2-6. Coaxial Cable (Driver-Receiver) DC Resistance

e. Device Summary Status, Test 3

If a summary of the status of all attached devices would be helpful, do the following:

Test /3: Display the Status of All Configured Terminals and Display Control Unit Summary Counters.

(1) To display the status of all attached devices, do the following at any display except 3290:

(a) While holding the ALT key, press the Test Request key.

(b) Key in /3.

(c) Press the Enter key.

(d) Examine the display. It should be similar to that in Example A, B, or C below.

(2) To exit the test mode, press and hold the ALT key and press the Test key.

(3) To monitor the status over a period of time, exit the existing test and initiate a Test /3 to indicate the most current changes.

(4) When Test /3 (Example C) port locations are indicating device disabled (line 2) or coax or device errors (lines 4 and 5), start at Step 5 to isolate the problem.

(5) If line 8 indicates summary checks, go to Step 6.

Example A: (Machine configured for 8 Category A devices)

```
Line 1: 01234567
Line 2: 111100--
Line 3: 0000 0000 0000 0000
```

Line 1 shows (in this display) Category A devices, which are numbered consecutively from 0 through 7.

Line 2 shows the status of each device, where:

1 = device powered on
0 = device recognized as powered off
– = device recognized as disabled because of CU-detected errors

Line 3 consists of control unit statistical summaries. See *3274 Control Unit Maintenance Concepts*, SY27-2528, for details.

Example B: (8 Category A and 4 Category B devices)

```
                 Category A device 0
                          Category B device 0
Line 1: 01234567  8901
Line 2: 1111111X  11--
Line 3: 0000 0000 0000 0000
```

Line 1 shows the 8 Category A devices, numbered 0–7, and the 4 Category B devices, numbered 8–1 (where 0=device 11 and 1=device 12). Category A devices always appear first and are separated from Category B devices by two spaces.

This test will display information for each configured device, such as *on, off, disabled,* and the device type. The summary of coaxial and device errors is also displayed.

A coaxial error is a composite of type A adapter indications, such as a timeout or erroneous data. This composite is increased each time the error occurs.

A device error is a composite of errors detected by the attached device, such as wrong parity or other error.

A device *powered off* is indicated when the device has been polled 32 times and a poll timeout or parity error has been detected each time.

A device *disabled* means an excessive number of errors has been detected and the device has been logically disconnected.

Use Test XX/4 to reset the summary error total.

Example C: (Machine configured for 8 Category A and 4 Category B devices)

```
          ┌──Category A device 0
          │          ┌──Category B device 0
Line 1:  01234567  8901
Line 2:  10XXX111  1111
Line 3:  dddidddd  pppp
Line 4:  ....   ::  ...*
Line 5:  ....   :.  *...
Line 6:  ++++    +  ++ +
Line 7:
Line 8:  0000 0001 0000 0000 0000
```

Line 1 shows coaxial port addresses (0–11). In this example the 3274 is configured for 12 devices (8 Category A displays and 4 Category B printers). Category A devices are always shown first. Printer and Category B devices are then shown separated by two spaces.

Line 2 shows the status of each device, where:

1 = device powered on
0 = device recognized as powered off
– = device recognized as disabled because of control-unit-detected errors
x = unassigned port (Note 1)

Line 3 shows the type of device attached, where:

d = display
p = printer
l = other
– = never initialized
i = display terminal (3290)

Line 4 shows a summary of coaxial errors, where:

. = no errors
: = 1–10 errors
| = 10–20 errors
* = 20 or more errors

Line 5 shows a summary of device errors, where:

. = no errors
: = 1–10 errors
| = 10–20 errors
* = 20 or more errors

Line 6 shows a summary of sessions bound (this line will appear only for SNA attachments), where:

+ = session bound
Blank = no session bound

Line 7 shows a display of dialed (X.21 switched only), where:

##XXXX (up to 32 characters) dialed number entered by the keyboard
##----0000 = direct call
---- = incoming call

Line 8 shows a summary of 3274 checks:

AABB	CCDD	EEFF	GGHH	JJKK
0000	0000	0000	0000	0000

Counter	Meaning
AABB	Summary of all machine checks
CCDD	Summary of all communication checks
EEFF	Summary of all program checks
GGHH	SDLC test commands received
JJKK	SDLC test commands sent (Maximum counter values are FFFF)

Notes:

1. Customized with individual port addressing. Allows unassigned (unused) physical port locations between used coaxial port locations. Applies to configuration Support D.
2. When 3290 displays are attached, the Category B adapters are not installed.

f. Test /B Device Address Assignment Table (Model 51C)

If individual port addressing was used during customization, the physical port and logical device addresses can be displayed using the following /B Test. Refer to Figures 2-7, 2-8, and 2-9.

Do the following at any display except a 3290:

(1) While holding the ALT key, press the Test Request key.

(2) Key in /B.

(3) Press the Enter key. The minus function (x–F) is returned if the display does not have a large enough screen size.

(4) To exit the test mode, press and hold the ALT key and press the Test key.

The format will be displayed as shown in Figure 2-8 or 2-9. If this step did not fix your problem or it did not apply, go to Step 6.

Notes:

1. The address table is displayed if the individual port assignment table was used during customization with Configuration Support D.
2. If customization was performed using sequential port addressing (sequence number 112), the /B Test will not run.
3. Using individual port addressing automatically assigns the device logical addresses and allows unassigned (unused) physical port locations between used coaxial port locations.

Addresses Displayed With /B Test	SDLC	BSC EBCDIC	BSC ASCII
00	02	40	20
01	03	C1	41
02	04	C2	42
03	05	C3	43
04	06	C4	44
05	07	C5	45
06	08	C6	46
07	09	C7	47
08	10	C8	48
09	11	C9	49
10	12	4A	5B
11	13	4B	2E
12	14	4C	3C
13	15	4D	28
14	16	4E	2B
15	17	4F	21
16	18	50	26
17	19	D1	4A
18	20	D2	4B
19	21	D3	4C
20	22	D4	4D
21	23	D5	4E
22	24	D6	4F
23	25	D7	50
24	26	D8	51
25	27	D9	52
26	28	5A	5D
27	29	5B	24
28	30	5C	2A
29	31	5D	29
30	32	5E	3B
31	33	5F	5E
May continue to 76	May continue to 76		

Figure 2-7. Translation Table for /B Test Address

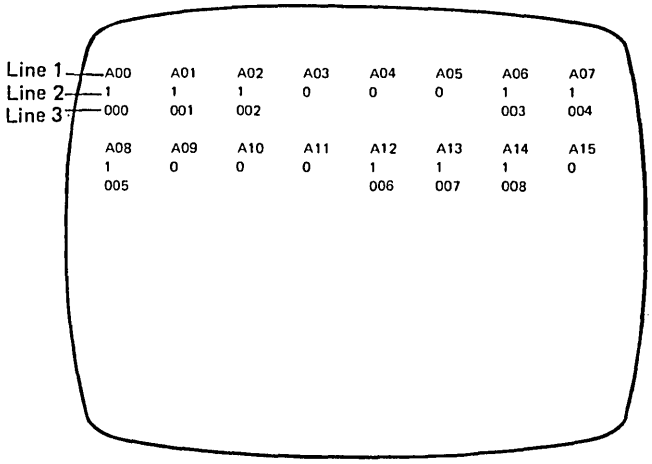

Line 1 is the physical coax port location.

Line 2 shows which physical ports were customized to have devices attached to them where:

1 = Available device
0 = Unavailable device

Line 3 is the primary address that is assigned to the device.

The primary addresses as shown in Line 3 are zero-based. Translation may be required to determine the actual addresses assigned for your machine. This is necessary because of the various addressing schemes used by BSC, SNA, etc. To translate primary addresses, see Figure 2-7.

Figure 2-8. Port Address Table without 3290 Displays (Model 51C)

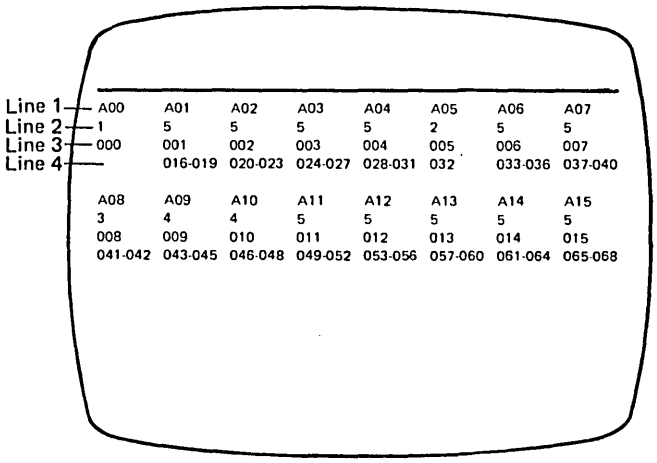

Line 1 is the physical coax port location. Port A00 cannot have 3290s attached.

Line 2 is the number of interactive screens. This allows you to address and view up to 5 different screens (terminal addresses) on a single 3290.

Line 3 is the primary address assigned to the device.

Line 4 is the range of secondary addresses customized for that device.

- The primary and secondary addresses as shown in lines 3 and 4 are zero-based. Translation may be required to determine the actual addresses assigned for your machine. This is necessary because of the various addressing schemes used by BSC, SNA, etc. To translate primary and secondary addresses, see Figure 2-7.

Figure 2-9. Port Address Table with 3290 Displays (Model 51C)

Step 6 – Display Symbols (Category A Only)

See Figure 2-10 when the following display symbols are on the screen:

a. Communication reminder

A condition exists that is inhibiting communication with the host system. If the terminal operator uses any host communication key, the communication reminder symbol will be displayed.

b. Communication check

Communication check appears if the terminal operator uses any host communication key while a communication error exists. Use the ALT 2 communication-wrap procedure if subsystem communication failure is suspected. See paragraph 5.3 and Step 8.

c. Machine check

An error has occurred within the CU or device that is nonrecoverable by the subsystem. The CU will attempt to display the error suffix. The four operational indicators (8 4 2 1) should be checked to further define the error. See Figure 2-11.

d. Program error PROG

An SNA protocol error or an error has been detected in the contents of the data stream.

If Subsystem Ready is off (4) and the device is disabled, go back to Step 5.

If host connection is off (A or B), see Figure 2-10 or change card Nos. 13, 14, and 20.

Go to Step 7 if this step did not fix your problem or does not apply.

Error Suffix	Associated Function	Card*/Repair Action
20X, 21X, 22X	Category A device failure	Replace D/R card No. 28, check internal cable A1Z1 or A1Z3, and use device maintenance manual.
235, 236 237, 238	Personal Computer Failure or customer program.	Use Personal Computer maintenance procedures.
240, 241	3290 synchronization error detected by the 3274	• The diskette microcode level may be incorrect. Verify feature/load diskette compatibility. • Use the 3290 maintenance procedures.
242	The 3290 detected a permanent 6nn error. The end result is the indication of the code (242).	Use the 3290 maintenance procedures.
243	The 3290 lost Op Complete. (Data stream to device may be excessive.)	Programming error. Check with program system representative (PSR).
270, 272, 273	Category B adapter failure	Replace card Nos. 24, 25, 26, 27.
271, 274, 279	Category B device failure	Replace D/R card No. 30, check internal cable A1Z2, and use device maintenance manual.
293	Device attached to unassigned port location.	• Run /3 test, and check for x in line 2. See page 2-9, Example C. • Disconnect unwanted device or recustomize responses 112 or 116, 117.
29X	Category A adapter failure	Replace card No. 12.
31X, 32X, 330–332, 334	Host adapter failure	Replace card No. 13.
333, 335	LSA failure (loop)	Replace card No. 14.
336	LSC failure (loop)	Verify I/O cable to LSC; replace LSC.
382	Response Time Monitor failure	Replace card No. 11.
386, 387, 388, 389	Operational load diskette failure	• Run the IML tests (Step 4). • Replace diskette. Replace A1K2, drive unit, and its card.
390, 391	Control logic/storage	Replace card Nos. 7, 8, 9, 3, 2, 1, 4, 5, 6.
392–395	Control storage (Kanji – Model 52C)	See code 0111, Figure 2-11.
397, 398, 399	Encrypt/Decrypt failure	See Chapter 6, Paragraph 6.1.3.
40X, 47X, 48X	Data stream program checks	Request PSR assistance if problem persists.
41X–46X, 49X	SNA protocol program checks	Request PSR assistance if problem persists.
501 (not loop)	Data Set Ready not present**	Check external communication cables, w/o IM feature, and perform ALT 2 (par. 5.3.1.2).
501 IM feature	Data Set Ready not present**	Replace card Nos. 13, 14, 18, 20 with IM feature.
501 (loop)	Local/Communicate switch in Local	Set the Local/Communicate switch to Communicate.
502	Clear to Send not present	Run ALT 2 Test (Wrap); see paragraph 5.3.
505	Normal operation after system reset; SNRM required.	Replace card Nos. 13, 14, 20.
520	Nonproductive timeout (SDLC)	Verify correct TP operation; contact host system operator.
521	Idle timeout (SDLC)	Verify correct TP operation; contact host system operator.
51X–53X	Data link error	Verify correct TP operation; replace card Nos. 13, 14.
532	No Syn characters received within 20 seconds (BSC)	Verify correct TP operation; replace card Nos. 13, 14.
590	3290 not being polled by the 3274. This code occurs only after the 3290 is ready [4]	If more than one device is failing, go to Step 5. If a single 3290 is failing: • Check for disconnected device cable. • Isolate by swapping driver/receiver cards; see Figure 2-4. • Use the 3290 maintenance procedures.
600–699	Device attachment 3290 failure	Use 3290 device maintenance procedures.
700–799	Device attachment 3290 program check	Use 3290 device maintenance procedures.

*Use Figure 1-7 for actual code locations.
**If DDS Adapter, Integrated Modems, or Loop, Data Set Ready is generated within the 3274.

Figure 2-10. Display Symbol Indications

Step 7 – Operational Indicators (8 4 2 1)

Enter Figure 2-11 with the indicator status from the Problem Report Form, item 3 (except for flashing code). These indicators represent failures by the control unit. They should be used in conjunction with any indicators displayed in Step 6.

Note: *Figure 2-11 correlates the four indicators to possible failing cards. (This figure should be used only after Steps 1 through 6 have been performed.) Do not change cards unless the failure is solid or the frequency is such that a fix can be verified.*

Use for Errors After IML

If the IML tests run successfully, all four operational indicators (8 4 2 1) will be on. After the operational code is loaded successfully, all indicators will be off. Any failures or interventions required that are detected by the operational code will turn on the operational indicators (8 4 2 1) with the following bit patterns.

Error	Failure or Intervention Required	Action[1] Information
0000 But problem exists	Operational hang condition	Not necessarily a 3274 problem. A trace may help in diagnosis.
0001	Control Storage parity error – cannot be isolated to a specific card.	Indicator does not provide fault isolation. Microcode-detected error.
0010	Invalid instruction or address detected.	Indicator does not provide fault isolation. Microcode-detected error.
0011	Control Storage parity error (Vol 0)	Replace cards R2 (51C) and P2 (52C).
0100	Control Storage parity error (Vol 1)	Replace cards S2 (51C) and Q2 (52C), and verify that installed storage agrees with customization response 113.
0101	Control Storage parity error (Vol 1)	Replace card T2 (51C).
0110	Control Storage parity error (Vol 2)	Replace U2 (51C).
0111	Control Storage parity error (Vol 3)	Replace V2 (51C).[2]
1000	Type A adapter machine check	Replace card Nos. 12 and 28.
1000/0001[3]	Type A adapter hang	Replace card Nos. 28 and 12.
1000/0101[3]	Type A adapter hang	Replace card No. 12.
1001	Any host attachment machine	Replace card Nos.13 and 14.
1010	Type B adapter machine check	Replace card Nos. 24, 25, 26, 27, and 30.
1010[4]	----------	See Code 1010 (flashing) in Figure 2-3.
1011	Response Time Monitor machine check	Replace card No. 11.
1100	Diskette Drive error/machine check	Replace diskette, card No. 10, File Control card No. 22 (Diskette Drive). Run IML tests, Step 4.
1101	Control logic failure	Replace card Nos. 7, 8, and 9.
1110[5]	Encrypt/Decrypt	Replace card No. 21.
1111/0001[3]	Load diskette intervention required	Drive handle was opened after IML sequence. Close diskette drive handle.
1100/1111[3]	Operational load diskette failure	Run the IML tests (Step 4). Replace diskette. Replace A1M2, drive unit, and its file card.

Notes:

[1] *Replace cards only when the frequency of error is such that a fix can be verified.*

[2] *(Model 52C) To further isolate one of four possible cards, perform the A2/1 variation of Test 1 (see MCM, SY27-2528, paragragh 3.3.5) from any Type A display. If bytes 5 through 8 contain information other than 0's, it indicates the failing card as follows:*

	nnn code displayed
Byte 5 = Card S2	*392*
Byte 6 = Card T2	*393*
Byte 7 = Card U2	*394*
Byte 8 = Card V2	*395*

Example: A 2/1

Byte →	*11 22*	*33 44*	*55 66*	*77 88*	*99 10,*
	XXXX	*XXXX*	*XXXX*	*XXXX*	*XXXX*

Card V2
Card U2
Card T2
Card S2

[3] *Alternating codes.*

[4] *Flashing*

[5] *Card removal destroys the master key. See paragraph 6.1.3.*

[6] *Problem could be caused by any attached device, coaxial cable, or 3274 driver/receiver card. If problem can be duplicated, disconnect port devices to isolate; then disconnect the driver-receiver card (Type A). See Figure 4-10.*

Figure 2-11. Operational Indicators

Step 8 – Host Attachment

If you have reached this step and the IML diagnostics have not detected a failure, but the host CPU site is recording Timeouts, Control Checks, Data Checks, or Operation Checks, perform item 1 (Non-Loop Attachment), item 2 (Loop Attachment), or item 3 (2400-, 4800-, or 9600-bps Integrated Modem Feature).

1. Host Attachment, Non-Loop.
   a. Request that the 3274 Online Tests (OLTs) be run.
   b. If OLTs indicate a failure or are unavailable, replace card Nos. 13, 14, and 21. [Removing card No. 21 will destroy the master key (Encrypt/Decrypt). See paragraph 6.1.3.]
   c. Verify card locations and operator panel adjustments (see Appendix C, paragraph C.2).
   d. See paragraph 5.3 (Wrap Test).
2. Host Attachment-Loop.
   a. Replace card Nos. 13 and 14.

   Note: *CPU is recording errors.*

   b. Verify card and operator panel adjustments (see Figure C-10).
   c. • See paragraph 5.3.4 (Loop Panel Indicators).
      • See paragraph 5.3.3 (Loop Wrap Test).
3. Host attachment-2400-, 4800-, and 9600-bps Integrated Modems.
   a. See Chapter 5, paragraph 5.4.5.
   b. Go to Entry MAP A130.

Step 9 – Voltage Checks

If you have reached this step and a problem still exists, measure all voltages. Use Power MAP A120, Step 049, entry point F. Go to the next step if this step did not fix your problem or does not apply.

Step 10 – Verification Test

a. Recycle the procedure to verify repair action or to isolate intermittent and multiple problems.

b. Verify and run IML tests by using the IML pushbutton and On/Off switch (power on).

Notes:

1. *Certain error conditions are defined as nonrecoverable either by the application program or by the access method. If the subsystem will not go online, call the PSR or the CE at the host system location.*
2. *Check the fans for proper operation, and replace if defective.*

Step 11 – Last Option

a. See the Symptom Repair List, Figure 2-12.

b. If the Symptom Repair List (Step 11, Figure 2-12) did not assist you in isolating the problem, use the following if you want to attempt further problem determination:

   • Appendix B of the Maintenance Concepts manual.
   • The diagnostic test provided by FERS DEMF or a similar program product to assist in problem determination.

c. If item b above fails to result in problem isolation and repair or if you choose not to use item b, request assistance from the next level of the support structure.

Symptom	Action
1. Any operator panel switch function failure except power ON/OFF switch (failing indication can be a missing function or a function that is always active).	1. • Verify for loose or incorrectly installed cables in the operator panel assembly. See Figure D-9. • Reseat cable in board location Z5, Z6, or Z2 (2400-, 4800-, 9600-bps Integrated Modem Feature) and verify that cable location is correct for the 3274 features. Socket Z6 is used only for loop attached machines. • Use Figures D-10 and D-11 (pages FO-7 and FO-9) to find the card associated with the switch function failures (reseat/swap card). • Verify operator panel cable for continuity. See Figure D-10. • Replace operator panel card. • Go to Machine Checkout MAP A100, Entry Point A.
2. 8421 indicator code is 1101.	2. This code (1101) will appear when an uncustomized system diskette is used.
3. 8421 indicator code is 0010 and then changes to 0001 after 60 seconds.	3. This code will appear when a feature diskette is used.

Figure 2-12. Symptom Repair List

Chapter 3. Maintenance Analysis Procedures

3.1 General

This chapter contains all the Maintenance Analysis Procedures (MAPs) required to support the Subsystem Problem Isolation steps described in the preceding chapter. You will have been directed to a specific MAP by some statement or reference in the sequence. The MAPs are presented in numerical sequence. In performing any MAP, you must follow the procedure exactly as given. Remember to perform Machine Check MAP A100 after having fixed the problem.

3.2 Contents

MAP A10, Bus Test 3-2
MAP A20, Control Logic Failure 3-7
MAP A40, Diskette Failure 3-11
MAP A50, Type A Adapter Failure 3-17
MAP A90, Device Adapter Type B Failure 3-20
MAP A100, Machine Checkout 3-22
MAP A120, Power Problem, Ind On or Off 3-24
MAP A122, Power On Ind Is Off and
Fan Not Turning 3-36
MAP A130, I.M. 2400, 4800, 9600 Failure 3-42
MAP A150, Installation/Customization Problems 3-47

ENTRY POINTS

FROM	ENTER THIS MAP		
MAP NUMBER	ENTRY POINT	PAGE NUMBER	STEP NUMBER
A20	A	1	001

EXIT POINTS

EXIT THIS MAP		TO	
PAGE NUMBER	STEP NUMBER	MAP NUMBER	ENTRY POINT
2	005	A100	A
2	007	A100	A
3	008	A100	A
3	010	A100	A
3	012	A100	A
4	015	A100	A
4	017	A100	A
5	018	A100	A
5	020	A100	A
5	022	A100	A
5	023	A120	A

001
(Entry Point A)

**********MAP SUMMARY**********

Maintenance concepts for Bus Test

This MAP uses card reference numbers to specify card socket locations. See Fold Out (FO-3) to convert card number to the real socket location.

Bus test tests the Control logic Bus for 'hot bits'(active lines on the bus) when the IML switch is pressed and held. It also functions as a lamp test for the four IML indicator lights on the operators panel. This MAP will isolate a bus failure to one of the following FRUs or card groups: Adapter cards, Control logic and Adapter Control (Type A, B) cards, and the operator panel and cable assembly. Bus test will run with only Control logic card (No. 9) and adapter control type A, card (No. 12) installed in the machine.

CAUTION

Before removing cards or cables switch power off.
(Step 001 continues)

A

- Bus test has failed if any IML indicator is not on. A successful Bus Test is indicated if all the operational indicators (8 4 2 1) are on while the IML pushbutton is pressed and held, and all the indicators go off when IML is released.

- If one or two IML indicators fails to light during bus test,

1. Replace card No. 12.
2. Replace the operators panel indicator card.
3. Verify for good cable continuity for -Led indicator on 1, 2, 4, 8 lines from board to operator panel card plug P2. See FO-7 or FO-9.

(Step 001 continued)

Did any indicator fail to light when the IML switch was pressed and held? See *A*

Y N

002
You are in the wrong MAP. Go back to Subsystem Problem Isolation start. (Chapter 2)

003
- Unseat all the cards from the A1 board as a group, except card numbers 9, 12 (Ref. FO-3 and FO-5) and then run Bus test. Note: unseating/removing card No. 21 (Encrypt/Decrypt) destroys the master key. See para. 6.1.3.

Did Bus test fail?

Y N

004

Does the 3274 contain device adapter type B Feature? *B*

Y N

005
- Reinstall the cards that were unseated in step 003 one at a time (install top card to card connectors) and run Bus test after you install each card. Bus test should fail again when you install one of these cards. Replace the failing card. Run Bus test to verify the repair.

Go To Map A100, Entry Point A.

006
- Reinstall the type B adapter cards as a group: C2, D2, E2, F2, and run bus test.

Did bus test fail?

Y N

007
- Reinstall the remaining cards that were unseated in step 003 one at a time (install top card to card connectors) and run Bus test after you install each card. Bus test should fail again when you install one of these cards. Replace the failing card. Run Bus test to verify the repair.

Go To Map A100, Entry Point A.

3 3
A B

B
To determine type B feature see back of machine for type B coax panel.

008

- Replace the following cards one at a time: D2, C2, F2, E2, and run bus test each time you replace a card. Bus test should stop failing when one of these cards is replaced.
- Reinstall all the remaining cards that were unseated and install card to card crossover connectors.
- Run bus test to verify the repair.

Go To Map A100, Entry Point A.

009

- Replace the following cards one at a time: No. 9 and 12 and run Bus test each time you replace a card. Bus test could stop failing when one of these cards is replaced.

Does Bus test still fail?

Y N

010

- Reinstall all the cards that were unseated and install card to card crossover connectors.
- Run bus test.

Go To Map A100, Entry Point A.

011

- Completely remove all the unseated cards from the board card guides. Note: only cards No. 9 and 12 are left in board.
- Switch power on.
- Use a jumper from any D08 pin and momentary ground pin J06 at card socket No. 12. *C*
- Run bus test.

Did bus test fail?

Y N

012

- Switch power off.
- Verify for good cable continuity from board Z4 row, pin M6A04 to power supply No. 1 plug P2, pin 1. (See Figure B2, B3).
- Verify TSR power supply No. 1 for good socket J2 and cable plug P2 connection at pin 1.
- Replace TSR power supply No. 1.
- Run bus test.
- Reinstall all the cards that were removed and install card to card crossover connectors.
- Run bus test.

Go To Map A100, Entry Point A.

4
C

C
This jumper procedure determines if the power on reset signal is missing.

013

- Use General Logic Probe and probe at power supply No.1 circuit board, plug P2 pin 1, while power is switched on. See Figure B2 or B3. *D*
- Verify that the signal (- power on reset) is pulsed (red/green) and after a slight delay then goes to UP (red) and stays up. *E*.

D
Probe to determine if power on reset is properly generated, such as reset is not being held up or down etc.

E
General Logic probe is set to the multi switch position.

Is the probe point correct?
Y N

014

Does your machine contain 2 TSR power supplies? (Fig. 4-7)
Y N

015
- Switch power off.
- Replace power supply No.1.
- Run bus test.
- Reinstall all the cards that were removed and install card to card crossover connectors.

Go To Map A100, Entry Point A.

016
- Switch power off.
- At TSR power supply No.1 disconnect plug P2. *F*.
- Use General Logic Probe and probe at power supply No. 2 plug P2 pin 1, while power is switched on. See Figure B3.
- Verify that the signal (- power on reset) is pulsed (red/green) and after a slight delay then goes to up (red) and stays up.

F
When machine contains 2 TSR power supplies the power on reset signal from each supply is connected together in the board. Disconnecting plug P2 from one TSR determines which supply is failing.
Note: TSR Power on Reset will not operate without board load (Plug P2 disconnected from both TSR's).

Is probe point correct at TSR No. 2?
Y N

017
- Switch power off.
- Reconnect plug P2 to TSR power supply No. 1.
- Replace failing TSR power supply No. 2.
- Run bus test.
- Reinstall all the cards that were removed and install card to card crossover connectors.

Go To Map A100, Entry Point A.

5 5
D E

018

- Switch power off.
- Replace failing TSR power supply No. 1.
- Run bus test.
- Reinstall all the cards that were removed and install card to card crossover connectors.

Go To Map A100, Entry Point A.

019

- Reinstall all the cards that were removed and install card to card crossover connectors.
- Inspect for loose operator panel cable in board socket A1-Z5 or A1-Z6.
- Inspect for loose and not correctly installed card to card crossover connectors. See FO-3 and FO-5.
- Inspect for loose cables from card in operator's panel assembly. See FO-7 and FO-9.

Does bus test still fail?

Y N

020

Go To Map A100, Entry Point A.

021

- It is possible to plug card numbers 4, 5 and 6 into the board backwards. See Figure A-11.
- Use General Logic Probe and probe at card No. 12 pin M07 as you depress the IML push button.
- Verify that the level (-IML PB on) goes to down (green) when button is pressed and goes back to red (up) when released. (See FO-7 and FO-9).

Is probe point correct?

Y N

022

- Verify for good operator panel cable continuity for plug P2 line (-IML PB on). See Figure FO-7 and FO-9.
- Replace OPS panel indicator card.

Go To Map A100, Entry Point A.

023

- Go through this map once more.

Go To Map A120, Entry Point A.

ENTRY POINTS

FROM	ENTER THIS MAP		
MAP NUMBER	ENTRY POINT	PAGE NUMBER	STEP NUMBER

No entries in this table

EXIT POINTS

EXIT THIS MAP		TO	
PAGE NUMBER	STEP NUMBER	MAP NUMBER	ENTRY POINT
2	006	A100	A
2	008	A100	A
3	009	A100	A
3	011	A100	A
3	013	A100	A
3	014	A120	A

001
(Entry Point A)

**********MAP SUMMARY**********

Maintenance concepts for MAP A20

This MAP uses card reference numbers to specify card socket locations. See Fold Out (FO-3) to convert card number to the real socket location.

MAP A20 was entered because of a failure while testing the operation of the 3 control logic cards: No. 7, 8, 9. The type A adapter card No.12 and the control storage card No.3 and the control storage feed thru, jumper cards: No. 4, 5 and 6. This test can run with only these cards and all other cards removed from the machine.

CAUTION

Before removing cards or cables switch power off.

Did IML control logic test fail? *A*
Y N

002
You are in the wrong Map, go back to subsystem isolation start. (Chapter 2)

2
A

A
The first IML test has failed if all IML led indicators are off.

003

Were all cards replaced as instructed in Chapter 2, Figure 2-3 (Error Code 0000)?

Y N

004

- Only allow the following cards plugged into the board as a group: 3, 4, 5, 6, 7, 8, 9, 12, (Ref. FO-3 and FO-5) and unseat the remaining cards. Note: Unseating/removing card No. 21 (encrypt/decrypt) destroys the master key. See para. 6.1.3. *B*
- Run control logic test.

B
The unseated cards can interact causing control logic test to fail.

Did control logic test fail?

Y N

005

Does the 3274 contain device adapter type B feature? *C*

Y N

C
To determine type B feature see back of machine for type B coax panel.

006

- Reinstall the cards that were unseated in step 004 one at a time and run control logic test after you install each card. Control logic test should fail again when you install one of these cards.
- Replace the failing card.

Go To Map A100, Entry Point A.

007

- Reinstall the type B adapter cards as a group: C2, D2, E2, F2, and run bus test.

Did control logic test fail?

Y N

008

- Reinstall the remaining cards that were unseated in step 004 one at a time and run control logic test after you install each card. Control logic test should fail again when you install one of these cards.
- Replace the failing card.

Go To Map A100, Entry Point A.

4 3 3
B C D

009

- Replace the following cards one at a time: D2, C2, F2, E2 and run IML control logic test each time you replace a card. Control logic test should stop failing when one of these cards is replaced.
- Reinstall all the cards that were unseated.

Go To Map A100, Entry Point A.

010

- Replace the following cards from the A1 board one at a time: No. 7, 9, 8, 12, 3, 4, 5, 6 and install card crossover connectors. Run control logic test each time you replace a card. Control logic test could stop failing when one of these cards is replaced. NOTE: Replace only those cards that were not replaced in Chapter 2, Figure 2-3.

Does control logic test still fail?

Y N

011

- Reinstall all the cards that were unseated.
- Run control logic test.

Go To Map A100, Entry Point A.

012

- Reinstall all the cards that were unseated.

(Entry Point C)

- Check for loose or not correctly installed card to card crossover connectors. See FO-3 and FO-5.
- It is possible to plug card numbers 4, 5 and 6 into board backwards. See Figure A-11.

Does control logic test still fail?

Y N

013

Go To Map A100, Entry Point A.

014

- If machine storage is equal to 64K (see Figure 2-4), then verify for a board wire from G02 to G12 on card socket No. 5.
- Go through this MAP once more.
- Verify that bus test still runs and if needed Go To MAP A10, Entry Point A.

Go To Map A120, Entry Point A.

015

Go to Page 3, Step 012, Entry Point C.

Map A40 Diskette Failure

Code 0010

PAGE 1 OF 6

ENTRY POINTS

FROM	ENTER THIS MAP		
MAP NUMBER	ENTRY POINT	PAGE NUMBER	STEP NUMBER

No entries in this table

EXIT POINTS

EXIT THIS MAP		TO	
PAGE NUMBER	STEP NUMBER	MAP NUMBER	ENTRY POINT
2	004	A100	A
2	005	A100	A
3	007	A100	A
3	010	A100	A
4	013	A100	A
4	014	A100	A
4	017	A100	A
5	021	A100	A
5	024	A100	A
5	026	A100	A
6	028	A100	A
6	029	A100	A

001
(Entry Point A)

**********MAP SUMMARY**********

Maintenance Concepts for Disk Drive

This MAP will aid you in performing a quick mechanical and visual check for failures such as loose pulleys, motor rotation, Drive Belt, Pressure Pad etc. If after additional tests such as power, cables, backup diskette, the problem still exists, the disk drive is replaced as a single FRU. The MAP uses Appendix E and Appendix F for reference. Appendix E applies when the 31SD is installed and Appendix F applies when the 51TD is installed.

****

NOTE: 1. Before using this MAP the drive file control card no.22 and the Diskette Adapter card No.10 should have been replaced. This MAP uses card reference numbers to specify card socket locations. See Fold Out (FO-3) to convert card number to the real socket location.

2. Code 0010 Checkpoint:

Using a customized system diskette and performing a successful ALT 1 (operational code load) indicates that the data was properly read from the system diskette. Knowing this ensures that MAP

(Step 001 continues)

(Step 001 continued)
possible cause' such as: Improper diskette, loose cables, motor rotation, voltages, etc. are not at fault. Replace and verify those parts that may be failing with the test 0010 write operation, such as: card M2, disk drive and its card, and diskette.

CAUTION

Before removing cards or cables, switch power off.

Check the following:
- Diskette drive operator knob is in closed position.
- Diskette is correctly installed.
- Correct diskette for machine model and features. Note: Verify that a 2 sided diskette is not being used in a 1 sided drive (31SD).

Is the drive belt broken or damaged?
Y N

002

Is the disk drive motor turning?
Y N

003
- Measure the AC line voltage on the prime power box plug P2-4 to P2-6 when AC power input is 120V and P2-1 P2-3 for 220V input, see Figure B-1.

Is there AC line voltage?
Y N

004
- Inspect and verify for loose or failing prime power box P2 plug/cable.

Go To Map A100, Entry Point A.

005
- Exchange the A.C. starting motor capacitor. See Appendix E.3.4.3 or F.3.4.3.
- Exchange the diskette drive motor. See Appendix E.3.4.3 or F.3.4.3.

Go To Map A100, Entry Point A.

6 3
A B

006
- Switch power off.
- Inspect the following for possible cause of failure:

1. Unseated or loose cables on Disk Drive file control card.
2. Drive unit mechanical binding conditions or loose pulleys etc.
3. Inspect that the head load solenoid cable eyelet end, did not disconnect from the head load bail stud. See Figure E.3.4.1 or F.3.4.1.

Were all of the above items correct?

Y N

007
- Repair, replace, adjust as needed.

Go To Map A100, Entry Point A.

008

Is the red felt pressure pad missing or contaminated? (lift head load actuator arm tip). See Figure E.3.2.1 or F.3.2.1.

Y N

009
- Reseat disk drive cable Y5 in board. See Figure A-12.
- Run IML tests.

Does IML test code (0010) still fail?

Y N

010

Go To Map A100, Entry Point A.

011
- Measure +24 volt D.C. at diskette drive card test point with reference to test point ground. See card +24V. test point Figure E-42 or F-41.

Is the voltage within the limits of +22V to +26V?

Y N

012
- Measure +24 volts D.C at power supply No.1, Plug 1 Pin 7 with reference to ground (D08). See power distribution Figure B-2 or B-3.

Is the voltage within the limits of +22V to +26V?

Y N

6 4 4 4
C D E F

013
- If voltage is missing verify for +24V at power supply No 1, socket 1 pin 7 and repair pin 7 connection if needed.
- Replace TSR power supply No. 1.

Go To Map A100, Entry Point A.

014
(Entry Point B)

- Verify cable continuity for the failing voltage point from power supply plug 1 to Disk Drive card cable plug. See Figure B-2 or B-3 plug 1 pins 5, 7, 11.

Go To Map A100, Entry Point A.

015
- Measure +5 volts D.C. at diskette drive card test point with reference to test point ground. See card +5V, test point Figure E-42 or F-41.

Is the voltage within the limits of +4.6V to +5.5V?
Y N

016
- Measure +5 volts D.C. at power supply No.1, plug 1 pin 5 with reference to ground (D08). See power distribution Figure B-2 or B-3.

Is the voltage within the limits of +4.6V to +5.5V?
Y N

017
- If voltage is missing verify for +5V at power supply No.1, socket 1 pin 5 and repair pin 5 connection if needed.
- Replace TSR power supply No.1.

Go To Map A100, Entry Point A.

018
Go to Step 014, Entry Point B.

019
- Measure the -5V D.C. at the diskette drive card test point with reference to test point ground (D08). See card -5 volt test point Figure E-42 or F-41.

Is the voltage within the limits of -4.6 to -5.5V?
Y N

5 5
G H

020
- Measure -5 volts DC at power supply No.1, plug 1 pin 11 with reference to ground (D08).

Is the voltage within the limits of -4.6V to -5.5V?
Y N

021
- If voltage is missing verify for -5V at power supply No.1, socket 2 pin 11 and repair pin 11 connection if needed.
- Replace TSR power supply No.1.

Go To Map A100, Entry Point A.

022
Go to Page 4, Step 014, Entry Point B.

023
- Obtain the backup customized system diskette.
- Run IML tests.

Does IML test code (0010) still fail?
Y N

024
Go To Map A100, Entry Point A.

025
- This would normally be experienced after a board replacement and your machine 'does not have' type B adapter features (card Nos. 24, 25, 26, 27) then verify that board has a wire from E2-B08 to E2-G02.
- Verify cable continuity from disk drive cable, board socket Y5 to cable plug at drive file card. See cable chart Figure C-14.
- Replace the Disk Drive unit.
- Run IML tests.

Does IML test code (0010) still fail?
Y N

026
Go To Map A100, Entry Point A.

6
J

027

- The system diskette could be bad or diskette microcode is being destroyed by a defective part.

a) To isolate diskette use this 3274 or another 3274 and check if system diskette can run beyond IML test 0010, if so, system diskette microcode is good. If a 1001-1010 (9A) appears after the 0010 code, this indicates a microcode hardware mismatch. This does not indicate a diskette failure.

Note: A 2-sided diskette will not function in a 1-sided drive.

b) If the system diskette is defective, or cannot be isolated, then as a group use a new set of the following parts:

- Diskette adapter card number 10.
- Card in file drive.
- File drive unit.
- System diskette.

Note: If the system back-up diskette is bad, an uncustomized diskette can be used to run beyond IML test 0010. This diskette will sequence 0001, 0010, 0011, 0100 and end with code 1101.

- Use your support structure for aid if problem is not corrected.

028

- USE REPAIR KIT, P/N 2200750 and replace red felt pad.

Go To Map A100, Entry Point A.

029

- Replace drive belt.

Go To Map A100, Entry Point A.

Map A50 TYPE A ADAPTER

FAILURE Code 0011 or 0100

PAGE 1 OF 3

ENTRY POINTS

FROM	ENTER THIS MAP		
MAP NUMBER	ENTRY POINT	PAGE NUMBER	STEP NUMBER
No entries in this table			

EXIT POINTS

EXIT THIS MAP		TO	
PAGE NUMBER	STEP NUMBER	MAP NUMBER	ENTRY POINT
2	005	A100	A
2	010	A100	A
3	011	A100	A

001
(Entry Point A)

**********MAP SUMMARY**********

Maintenance concepts for type A adapter failure.

This MAP is entered from Chapter 2, Step 4, Figure 2-3 (Failure code to card replacement) After cards that can cause TYPE A ADAPTER failure codes 0011 or 0100 were replaced, this MAP is used to isolate a failing 3278/3279 display that can also cause a TYPE A ADAPTER failure code.

CAUTION

Before removing cards or cables switch power off.

Is the IML test failing with error code 0011 or 0100?
Y N

002
You are in the wrong MAP, go back to subsystem isolation start. (Chapter 2).

003
- At the 3274 device coax panel, disconnect coax cable at address port A0. *A*
- Run the IML tests. *B*

A Display station at address port A0 is the only location used for the IML/TYPE A ADAPTER test. NOTE: only 3278/3279 display can be attached to port A0.

B Determine if TYPE A ADAPTER failure is caused by interaction with attached 3278/3279.

Does TYPE A ADAPTER test 0011 or 0100 still fail?
Y N

2 2
A B

004

- Connect another display (type A) to address port A0 by moving a coax cable from another type A port location. *C*
- Run the IML tests.

C To get the status for all 3274 attached devices, i.e. device powered on, off or disabled, run device summary status (test 3). See Chapter 2, Step 5. NOTE: Test 3 will not run if IML tests are failing. If failing, perform an ALT 1 switch function. The ALT 1 will allow the operational code to be loaded.

Does TYPE A ADAPTER test fail again with error code 0011 or 0100?

Y N

005

- Problem is in the 3278/3279 or coax cable that was disconnected from port A0. Use display maintenance information manual.

Go To Map A100, Entry Point A.

006

- The display that was swapped to port A0 is also failing.

007

Is the IML failing code 0011?

Y N

008

Is the failing code 0100?

Y N

009

You are in the wrong MAP, go back to subsystem isolation start (Chapter 2).

010

- Verify that type A DR/REC card No. 28 and 29 and cable is securely plugged into I/O coax panel assembly.
- Inspect for loose type A cable in board socket Z1 or Z3.

Go To Map A100, Entry Point A.

3
C

011

- Inspect for loose CCA/HPCA jumper card No. 32 in board socket Y6. Note: The card part number must match the machine CCA or HPCA feature. Ref. Figure A-5 for part number.
- Verify that type A Dr/Rec card No. 28 and cable is securely plugged into I/O coax panel assembly.
- Verify that DR/REC (type A) card No. 28 has +5V D.C. at push pin terminal. See Figure 4-10 and B2 or B3.

Go To Map A100, Entry Point A.

ENTRY POINTS

FROM	ENTER THIS MAP		
MAP NUMBER	ENTRY POINT	PAGE NUMBER	STEP NUMBER
No entries in this table			

EXIT POINTS

EXIT THIS MAP		TO	
PAGE NUMBER	STEP NUMBER	MAP NUMBER	ENTRY POINT
2	005	A100	A
2	006	A100	A

001
(Entry Point A)

**********MAP SUMMARY**********

Maintenance Concepts for Type B Adapter Failure

This MAP is entered from Chapter 2, Step 4, Figure 2-3 (failure code to card replacement). After cards that can cause Devise Adapter Type B failure code 1000 were replaced this MAP is used to isolate a failing 3277 display or printer that can also cause this failure code. First the device adapter IML tests are run without testing the attached display or printer and then the attached devices are tested for readiness. The first to be found ready is used for additional device testing, if no device is ready the remaining device tests are bypassed. NOTE: the same IML testing is performed when attached device is a printer or display.

CAUTION: Before removing cards or cables switch power off.

Is the IML test failing with error code 1000?
Y N

002
- You are in the wrong MAP, Go back to Subsystem isolation start (Chapter 2).

2
A

003

- At the 3274 device coax panel, (Type B) disconnect the coax cable for the device that is failing. See *A*.
- Run the IML tests *B*

A • Get the status for all 3274 attached devices, I.E. Device powered on, off or disabled, run device summary status (test 3) see Chapter 2, Step 5. NOTE: Test 3 will not run if IML tests are failing. If failing perform an ALT 1 switch function. The ALT 1 will allow the operational code to be loaded.
• To determine the failing type B port location use the summary status and select the lowest port number (Type B) device that is powered on.
• List any device type B power on device location (Could be used in next step).

B Determine if device failure is caused by interaction with attached device.

Does IML test 1000 still fail?
Y N

004

- Connect another device (Type B) to the disconnected address port by moving a coax cable from another Type B port location. *C*.
- Run the IML tests.

Does IML test fail again with error code 1000?
Y N

C Use powered on device.

005

- Problem is in the device or coax cable that was disconnected from failing port location. Use 3277 display troubleshooting quide SY27-2314.

Go To Map A100, Entry Point A.

006
(Entry Point B)

- If your logic board has the Type B adapter cards, see Figure 1-3, then verify that wire E2G02 to E2B08 is not installed.
- Verify for loose or defective device B cable in board location A1-Z2. See Figure C-18.
- Verify again all cards from chapter 2, step 4, Figure 2-3 that could cause device type B error code 1000.

Go To Map A100, Entry Point A.

007
Go to Step 006, Entry Point B.

PAGE 1 OF 2

ENTRY POINTS

FROM	ENTER THIS MAP		
MAP NUMBER	ENTRY POINT	PAGE NUMBER	STEP NUMBER
A11	A	1	001
A20	A	1	001
A40	A	1	001
A50	A	1	001
A90	A	1	001

EXIT POINTS

EXIT THIS MAP		TO	
PAGE NUMBER	STEP NUMBER	MAP NUMBER	ENTRY POINT
1	004	A10	A
1	002	A120	A

001
(Entry Point A)

Maintenance Concepts for Map 0100

This Map is entered after a repair action is performed. MAP A100 will verify the repair or send you back to subsystem isolation checkout in Chapter 2.

Switch power on if not on.

Is the power on indicator lighted?
Y N

002
Go To Map A120, Entry Point A.

003
Perform bus test (press and hold the IML switch).

Did the 4 IML indicators light?
Y N

004
Go To Map A10, Entry Point A.

2
A

005
- Place system diskette in 31SD drive.
- Run IML tests with the IML switch and again by switching power off and then on.

Did IML tests run correctly? *A*
Y N

006

Is the same IML test code failing?
Y N

007
- Determine if bus test is intermittent. Run bus test and repeat as needed. If failure occurs, go to Map A10.
- Repeat IML test as needed to check for more than one problem. Record the IML indicator failure codes.
- Use the lowest IML indicator failure code and go back to subsystem isolation, Chapter 2, Step 4.

008
- Problem not corrected by repair action.
- Go back to Chapter 2 and continue subsystem isolation.

009

Is the subsystem ready symbol lit on the 3278 that is attached to address port zero? *A*
Y N

010
Go back to subsystem problem isolation (Chapter 2) and use step 5 device driver receiver and test 3 (device summary status).

011
End of call or continue subsystem isolation checkout in Chapter 2.

A While the IML tests are running the IML indicators are stepped until all the operational indicators go on (operational code has loaded). When the operational code has taken control all the operational indicators are turned off and the ready symbol '4' is lit on bottom line of display port A0.

ENTRY POINTS

FROM	ENTER THIS MAP		
MAP NUMBER	ENTRY POINT	PAGE NUMBER	STEP NUMBER

No entries in this table

EXIT POINTS

EXIT THIS MAP		TO	
PAGE NUMBER	STEP NUMBER	MAP NUMBER	ENTRY POINT
2	004	A100	A
3	009	A100	A
3	011	A100	A
4	012	A100	A
4	014	A100	A
4	018	A100	A
9	043	A100	A
9	046	A100	A
5	021	A100	A
5	023	A100	A
6	025	A100	A
6	028	A100	A
7	030	A100	A
7	032	A100	A
7	033	A100	A
8	035	A100	A
8	039	A100	A
8	040	A100	A
8	037	A100	A
10	051	A100	A
12	055	A100	A
12	056	A100	A
2	003	A122	A

001
(Entry Point A)

This MAP is used to find a power problem when the Power On indicator is OFF, or to verify that all TSR output voltages are within limits. When the fan is not turning and Power On indicator is OFF, this indicates a primary AC voltage problem and MAP A122 is used. The output voltages from TSR supply enters the board through cable sockets Y3 and Z4. Depending upon machine features, 1 or 2 TSR supplies are used. When 2 TSR's are used, card sockets A through G receive their voltage from TSR No. 2 and sockets H through V from TSR No. 1. NOTE: Model 52C, sockets are A-H and J-V. The +5 volts is used to turn on the Power On indicator and is needed from each TSR supply. When a voltage short or overload condition occurs on any TSR output voltage the TSR shuts down and all voltages will go to

(Step 001 continues)

(Step 001 continued)
zero. The MAP concept is to verify that the primary input D.C. voltage to the TSR is correct. If incorrect, the filter capacitor, diode assembly, power transformer cables, etc. are measured for proper voltages. If input voltage is correct to TSR, all the voltage loads are disconnected from TSR supply. The +5 voltage is measured at TSR and if good, loads are reconnected and then disconnected one at a time until the power on indicator turns on, which then isolates the failing part.

NOTE: When power is off and a short or overload condition is disconnected from the TSR supply, a time period of 15 seconds is needed before switching power on. If this is not done the TSR voltages will not reach their proper level. This same condition also occurs if all TSR loads are disconnected (plugs P1 and P2 disconnected).

CAUTION

Before removing cards or cables switch power off.

DANGER

Input AC voltage is present on prime power box plug P1, and ON-OFF switch when power is off.

Is the 3274 fan turning? *A*
Y N

002

Is the power on indicator lighted?
Y N

003
- Input power problem.

Go To Map A122, Entry Point A.

004
- Switch power off and disconnect power cord plug.
- Verify plug connection at fan assembly. See Figure 4-6.
- For U.S. and Canada machines: Measure for input A.C. voltage at prime power box plug P5 between pins 1 and 3. If missing, verify plug and socket connection. See Figure B-1.
- For World Trade machines: Measure the fan A.C. input voltage at power transformer terminal block. See Figure B-6 for voltage and terminal pins.
- Replace fan.

Go To Map A100, Entry Point A.

3
A

A
If fan is turning this indicates AC line voltage is applied to prime power box jack J3 and J5. Plug P3 goes to power transformer input.

005

Is the power on indicator lighted? *B*

Y N

006

Is the machine operating correctly but the only problem is with indicator not lighting?

Y N

007

- Set C.E. meter to 150VDC scale.
- Measure +60VDC at filter capacitor C1 between + terminal (wire No. 1) and - terminal (wire No. 2). See Figure 4-8.

Is measured voltage within the limits of +48V D.C. and +75V D.C.? *C*

Y N

008

- Measure for the correct input A.C. voltage for your machine at prime power box plug P3 between pins 1 and 3. See Figure B1.

Is the correct A.C. voltage present?

Y N

009

- Verify for good socket J3 and cable plug P3 connection at pins 1 and 3.

Go To Map A100, Entry Point A.

010

- Set C.E. meter to 50VAC scale.
- Measure 48 VAC at CR-1 diode assembly across the two pins that have wire Nos. 3, 4 or 7, 8 or 11, 12. See Figure 4-7.

Is the measured A.C. voltage within the limits of 41 and 55VAC? *D*

Y N

011

- Replace primary power transformer. See Figure 4-5.

Go To Map A100, Entry Point A.

1 0 9 4 4
B C D E

B

If the indicator is OFF this can be caused by a problem with: +60VDC to TSR power supply, TSR output 5V, overload condition at any TSR output voltage, OPS panel card.

C

Determine if primary power supply voltage is correct. (Goes to TSR supply input).

D

If voltage is within limits: indicates that primary power transformer is good.

D 3 E 3

Map A120 Power Ind. ON or OFF

PAGE 4 OF 12

012

- Replace filter capacitor C1. See Figure 4-8.
- Replace CR-1 diode assembly. See Figure 4-7.

Go To Map A100, Entry Point A.

013

- Measure +60VDC at TSR power supply No. 1 between pins (+) E1 and (-)E2 Ref. Loc. Figure 4-8,4-9.
- If your machine has another TSR power supply (No. 2) measure that TSR supply between pins (+)E1 (-)E2.

Is the measured voltage present at TSR No. 1 and No. 2?

Y N

014

- Verify for open cable connection from filter capacitor (C1) to TSR power supply that has missing voltage.

Go To Map A100, Entry Point A.

015

Does your machine have two TSR power supplies?

Y N

016

(Entry Point B)

- Measure +5VDC at any board D03 pin within the group of socket locations H2 thru V2 with reference to ground (D08) *E*.

Is the +5VDC within the limits of +4.6 to 5.5V?

Y N

017

Is the +5VDC missing?

Y N

018

- Replace TSR supply No. 1.

Go To Map A100, Entry Point A.

9 F 8 G 5 H

E

These sockets receive their voltages from TSR supply No. 1.

019

- Switch power off.
- At TSR power supply No. 1, disconnect the two plugs P1 and P2. *G*
- After power was off wait 15 seconds and then switch power on.
- At the disconnected power supply No. 1, measure +5VDC at jack J1 and J2 pin 2 (+) and pin 12 (-). See Figure B2.

Is the +5VDC still missing?

Y N

020

- Switch power off and reconnect disconnected power supply No. 1, plugs P1 and P2. *H*

(Entry Point C)

- At logic board remove about half the cards as a group. *J*
- After power was off wait 15 seconds and then switch power on.

Did the power on indicator remain off?

Y N

021

- Switch power off and reinstall the previously removed group of cards, one at a time, and perform power on after you install each card. Power on indicator should remain off again when you install the failing card. Note: Do not install cards when power is on.

Go To Map A100, Entry Point A.

022

- Switch power off and remove the remaining cards as a group. *J*
- After power was off wait 15 seconds and then switch power on.

Did the power on indicator remain off?

Y N

023

- Switch power off and reinstall the previously removed group of cards one at a time. Power on indicator should remain off again when you install the failing card. Note: Do not install cards when power is on.

Go To Map A100, Entry Point A.

8 6
J K

G
Disconnect all loads from TSR supply and determine if overload is causing +5V to be at 0V.

H
TSR No. 1 is not causing power problem.

J
Determine if disconnecting this part or parts is causing the TSR power supply to overload.

024
- Switch power off.
- At 31SD, disconnect the 36 pin I/O connector from the file control card. *J* See Figure E-7.
- After power was off wait 15 seconds and then switch power on.

Did the power on indicator remain off?
Y N

025
- Switch power off.
- Replace card in 31SD. See Figure E.5.7.
- Verify for short in voltage line (+5, +24, -5) in disk file cable. See Figure C-14.

Go To Map A100, Entry Point A.

026

Does your machine contain a line plate assembly? (See Figure 4-12).
Y N

027
(Entry Point D)

- Switch power off.
- At Type A coax I/O panel assembly disconnect push pin from terminal E1 (+5V). See Figure 4-10. *J*
- After power was off wait 15 seconds and then switch power on.

Did the power on indicator remain off?
Y N

028
- Switch power off and reinstall previously removed push pin on coax panel assembly.
- Replace driver-receiver card (isolate to one card, if two Type A cards are installed).

Go To Map A100, Entry Point A.

8 7
L M

029

- Switch power off and reinstall previously removed push pin on coax panel assembly.
- At logic board, disconnect the OPS panel cable in location A1-Z2 (Feature), A1-Z5 or A1-Z6. *J*.
- After power was off wait 15 seconds and then switch power on.
- Measure +5VDC at any card socket D03 pin with reference to ground (D08).

Is the +5VDC missing?

Y N

030

- Switch power off and reconnect the OPS panel cable in board socket Z2, Z5 or Z6.
- Replace the OPS panel component card.

Go To Map A100, Entry Point A.

031

- Switch power off and disconnect all the board cables from board except power cables Y3 and Z4. *J*
- After power was off wait 15 seconds and then switch power on.

Did the power on indicator remain off?

Y N

032

- Verify that board cables were in their proper sockets. See Figure 4-14, and Fold Out (FO-3, FO-5).
- Isolate voltage short to one of the previously disconnected board cables.
- Reconnect all board cables and cards.

Go To Map A100, Entry Point A.

033

- A board voltage short is indicated, replace board. See Board Procedure Figure 4-14.

Go To Map A100, Entry Point A.

034
- Switch power off and open line plate.
- Disconnect cable from line plate assembly.
- After power was off wait 15 seconds and then switch power on.

Did the power on indicator remain off?
Y N

035
- Switch power off and replace line plate card.

Go To Map A100, Entry Point A.

036
- Switch power off and reconnect line plate cable and cover.

Go to Page 6, Step 027, Entry Point D.

037
- Replace the TSR power supply No. 1.

Go To Map A100, Entry Point A.

038
(Entry Point E)

- At logic board, inspect for loose OPS panel cable Z5 or Z6.
- Inspect for loose cables on operator panel indicator card. See Figure D-9.
- Switch power off.
- At OPS panel assembly, disconnect plug P2 from indicator card.
- After power was off wait 15 seconds and then switch power on.
- Measure +5VDC at disconnected plug P2, pins A02 and A11 (+) with reference to B01 (-). See FO-7 and FO-9 for cable.

Is +5VDC missing at either measured pin?
Y N

039
- Replace OPS panel indicator card.

Go To Map A100, Entry Point A.

040
- Test for open +5 voltage and DC return points (A01, B01) in cable.

Go To Map A100, Entry Point A.

041
- Measure +5VDC at any board D03 pin within the group of sockets A2 through G2. *K*

K
These sockets receive their voltages from TSR supply No. 2 when two power supplies are used (dual).

Is the +5VDC within the limits of +4.6 to 5.5V?
Y N

042

Is the +5VDC missing?
Y N

043
- Replace the TSR supply No. 2.

Go To Map A100, Entry Point A.

044
- Switch power off.
- At the TSR power supply assembly board No. 2 (Loc. 01E), disconnect the two 15 pin plugs P1 and P2. *L*
- Switch power on.
- At the disconnected power supply No. 2, measure +5VDC at jack J1 and J2 pin 2 (+) and pin 12 (-). See Figure B-3.

L
Disconnect all loads from TSR supply No. 2 and determine if overload is causing +5V to be at 0V.

Is the +5VDC still missing?
Y N

045
- Switch power off and reconnect previously disconnected power supply No. 2 plugs P1 and P2. *M*

M
TSR No. 2 is not causing power problem.

Go to Page 5, Step 020, Entry Point C.

046
- Switch power off.
- Replace the TSR power supply No. 2.

Go To Map A100, Entry Point A.

047
Go to Page 4, Step 016, Entry Point B.

048
Go to Page 8, Step 038, Entry Point E.

049
(Entry Point F)

Does your machine contain 2 TSR power supplies?
Y N

050
- See below Chart A 'Single Power System' and measure D.C. voltages with reference to ground (D08).

CHART A - SINGLE POWER SUPPLY SYSTEM

VOLT	BOARD PIN	DC LIMITS	VOLTAGE FROM POWER SUPPLY NO.	RIPPLE *N* P-P (M-V)
+5	C2D03	+4.6 to +5.5	No. 1	200 MV
+8.5	C2B11	+7.8 to +9.3	No. 1	340 MV
+12	R2S13	+11 to +13	No. 1	480 MV
+24	F2B13 Note 1	+22 to +26	No. 1	960 MV
+24	K2B13 Note 2	+22 to +26	No. 1	960 MV
-5	C2B06	-4.6 to -5.5	No. 1	200 MV
-8.5	G2D07	-7.8 to -9.3	No. 1	340 MV

NOTE 1: Measure this point only when machine is a Model 52-C.

NOTE 2: Measure this point only when machine is a Model 51-C.

Were all measured voltages in Chart A within limits?
Y N

051
- If voltage is missing, verify that same voltage is missing at power supply assembly board plug and repair cable/plug if needed. See Figure B-2.
- Replace TSR power supply No. 1.

Go To Map A100, Entry Point A.

1 1
1 1
N P

N
The TSR input voltage (+48VDC thru +75VDC) ripple at TSR pin (+) E1 to (-) E2 should not exceed 3V. If ripple is a problem, isolate to capacitor C1 or diode CR-1.

052
(Entry Point G)

- If you entered this MAP from another MAP, use your support structure for aid.
- Go back to Chapter 2 Step 4 and continue subsystem isolation.

053
See below Chart B 'Dual Power System' and measure D.C. voltages with reference to ground (D08).

CHART B - DUAL POWER SUPPLY SYSTEM

VOLT	BOARD PIN	DC LIMITS	VOLTAGE FROM POWER SUPPLY NO.	RIPPLE *N* P-P (M-V)
+5	C2D03	+4.6 to +5.5	No. 2	200 MV
+5	T2D03	+4.6 to +5.5	No. 1	200 MV
+8.5	C2B11	+7.8 to +9.3	No. 2	340 MV
+8.5	T2B11	+7.8 to +9.3	No. 1	340 MV
+12	R2S13	+11 to +13	No. 1	480 MV
+24	F2B13 NOTE 1	+22 to +26	No. 1	960 MV
+24	K2B13 NOTE 2	+22 to +26	No. 1	960 MV
-5	C2B06	-4.6 to -5.5	No. 2	200 MV
-5	T2B06	-4.6 to -5.5	No. 1	200 MV
-8.5	G2D07	-7.8 to -9.3	No. 1	340 MV

NOTE 1: Measure this point only when machine is a Model 52-C.

NOTE 2: Measure this point only when machine is a Model 51-C.

(Step 053 continues)

(Step 053 continued)

Were all measured voltages in Chart B within limits?
Y N

054

Is the failing voltage in Chart B from power supply No. 1?
Y N

055
- If voltage is missing, verify that same voltage is missing at power supply No. 2 plug and repair cable/plug if needed. See Figure B-3.
- Replace TSR power supply No. 2.

Go To Map A100, Entry Point A.

056
- If voltage is missing, verify that same voltage is missing at power supply No. 1 plug and repair cable/plug if needed. See Figure B-2.
- Replace TSR power supply No. 1.

Go To Map A100, Entry Point A.

057
Go to Page 11, Step 052, Entry Point G.

Map A122 Power On Ind. is Off and Fan Not Turning

PAGE 1 OF 6

ENTRY POINTS

FROM	ENTER THIS MAP		
MAP NUMBER	ENTRY POINT	PAGE NUMBER	STEP NUMBER

No entries in this table

EXIT POINTS

EXIT THIS MAP		TO	
PAGE NUMBER	STEP NUMBER	MAP NUMBER	ENTRY POINT
2	003	A100	A
3	006	A100	A
3	009	A100	A
3	010	A100	A
4	014	A100	A
4	015	A100	A
5	018	A100	A
5	019	A100	A
5	020	A100	A
6	022	A100	A
6	023	A100	A

001
(Entry Point A)

**********MAP SUMMARY**********

Maintenance concepts for MAP A122

Entry to this MAP is from MAP A120 if the Fan is not turning and the power on indicator is off. When the Fan is not turning this indicates that input A.C. voltage is also not being supplied to the input of the power transformer, and thus the power on indicator is off. When the primary fuse F1 is not blowing this indicates the A.C. circuit is not complete through power line cord, plug P1 cable, power on-off switch and fuse. The blown fuse condition can be caused in the primary circuits power transformer, diode assembly, filter capacitor or the TSR-1E power supply assembly. The Fan assembly or 31SD file motor can also cause the fuse to blow. Overloads in the TSR power supply voltage outputs do not cause the fuse to blow, but instead will reduce all voltages to zero. The MAP concept is to measure for missing A.C. voltage when the fuse is not blown. If fuse is blowing, replace fuse and disconnect components until overload condition is isolated.

Note: only use this MAP if the ON-OFF indicator is OFF and fan is not turning.

• Switch power off.
(Step 001 continues)

(Step 001 continued)
- Verify fuse F1 on primary power box.

Is the fuse blown?
Y N

002
- Verify that 3274 power cable is connected to an active outlet.
- Verify that the power cable plug is connected tightly on the back of the 3274.

DANGER: Input A.C. voltage is present at power on switch terminals and plug P1 when 3274 power on-off switch is in off position.

- Measure for the correct input A.C. voltage for your machine at prime power box plug P1 between pins 1 and 2. Note: measure with plug P1 connected. See Figure B1.

Is the correct A.C. voltage present?
Y N

003
- Disconnect the 3274 power plug from power outlet.
- Verify for open or defective power line cord/plug.
- On prime power box verify for good socket J1 and cable plug P1 connection at pins 1 and 2.

Go To Map A100, Entry Point A.

004
- Measure for input A.C. voltage at prime power plug P1 between pins 3 and 4. Note: measure with plug P1 connected. *A*

A
Verify that A.C. line voltage is switched through power on switch.

Is the correct A.C. voltage present?
Y N

005
- On prime power box verify for good socket J1 and cable plug P1 connections at pins 1 thru 4.
- An open cable/power on switch (S13) is indicated. Replace OPS panel power on switch/cable assembly. See Figure 4-15.

3 3
A B

006
- Verify again for blown fuse F1.
- Defective fuse F1 socket is possible, verify fuse socket in prime power box.
- Go through this MAP once more.

Go To Map A100, Entry Point A.

007
- Switch power off.
- Replace blown fuse. See Figure A-4 for part numbers.
- At prime power box disconnect plugs P2 and P5. Note: Plug P5 is not used with World Trade machines. *B*
- Switch power on.

B
Disconnecting plug P2 and P5 to determine if fan or 31SD motor is causing fuse to blow.

Does fuse still blow?
Y N

008
- Switch power off.
- At prime power box connect previously removed plug P2. *C*
- Switch power on.

C
Determine if fan is causing fuse to blow.

Does fuse still blow?
Y N

009
- Switch power off.
- Check fan assembly and cable for short circuit.
- Replace fan assembly.

Go To Map A100, Entry Point A.

010
- Switch power off.
- Replace blown fuse.
- Test 31SD drive motor for short or binding condition.
- At prime power box reconnect previously removed plug P5.
- Replace 31SD drive motor assembly.

Go To Map A100, Entry Point A.

011

- Switch power off. *D*
- Replace blown fuse.
- At CR-1 diode assembly disconnect push pin from + terminal (wire no. +). See Figures 4-7 and B1. *E*
- Switch power on.

D
Isolates blown fuse to power transformer, diode CR-1, filter capacitor C1, or TSR power supply.

E
Isolates blown fuse to TSR power supply or input filter capacitor.

Does fuse still blow?
Y N

012

Does machine have two TSR power supplies? (Figure 4-7)
Y N

013

- Switch power off.
- At CR-1 diode reconnect previously removed push pin to the + terminal.
- At TSR power supply assembly No. 1, disconnect push pin from terminal E1 (wire No. 1). *F*
- Switch power on.

F
Determines if the TSR power supply assembly is causing fuse to blow.

Does fuse still blow?
Y N

014

- Switch power off.
- At prime power box reconnect previously removed plugs P2 and P5.
- Replace power supply No. 1. See Figure 4-9.

Go To Map A100, Entry Point A.

015

- Switch power off. *G*
- Replace blown fuse.
- At TSR power supply No. 1 reconnect previously removed push pin to terminal E1.
- At prime power box reconnect previously removed plugs P2 and P5.
- Replace filter capacitor C-1. See Figure 4-8.

Go To Map A100, Entry Point A.

G
Blown fuse with TSR disconnected indicates input capacitor C1 is causing overload.

6 5
D E

016

- Switch power off.
- At CR-1 diode reconnect previously removed push pin to the + terminal.
- At TSR power supply No. 1, disconnect push pin from terminal E1. *F*
- At TSR power supply No. 2, disconnect push pin from terminal E1. *F*
- Switch power on.

Does fuse still blow?

Y N

017

- Switch power off.
- At TSR No. 1 reconnect previously removed push pin to terminal E1. *H*
- Switch power on.

H

Determines which of the two TSR power supplies is causing blown fuse.

Does fuse still blow?

Y N

018

- Switch power off.
- At prime power box reconnect previously removed plugs P2 and P5. (P5 U.S. and Canada).
- Replace power supply No. 2. See Figure 4-9.

Go To Map A100, Entry Point A.

019

- Switch power off.
- Replace blown fuse.
- At prime power box reconnect previously removed plugs P2 and P5. (P5 U.S. and Canada).
- At power supply No. 2 reconnect previously removed push pin to terminal E1.
- Replace power supply No. 1. See Figure 4-9.

Go To Map A100, Entry Point A.

020

- Switch power off. *G*
- Replace blown fuse.
- At power supply No. 1 and No. 2 reconnect previously removed push pin to terminal E1.
- At prime power box reconnect previously removed plugs P2 and P5. (P5 U.S. and Canada).
- Replace filter capacitor C-1, See Figure 4-8.

Go To Map A100, Entry Point A.

021

- Switch power off.
- Replace blown fuse.
- At CR-1 diode reconnect previously removed push pin to the + terminal. *J*
- At CR-1 diode disconnect push pin from terminal with wire No. 3 or 7 or 11. (unmarked diode terminal goes to power transformer).
- Switch power on.

Does fuse still blow?

Y N

022

- Switch power off.
- At prime power box reconnect previously removed plugs P2 and P5. (P5 U.S. and Canada).
- Replace CR-1 diode. See Figure 4-7.

Go To Map A100, Entry Point A.

023

- Switch power off.
- Replace blown fuse.
- If World Trade machine, check fan for binding condition.
- If World Trade Machine, check that the power transformer terminal block connections are correct for the input A.C. voltage. See Figure B-6.
- At CR-1 diode reconnect previously removed push pin to the unmarked terminal.
- At prime power box reconnect previously removed plugs P2 and P5.
- Replace primary power transformer. See Figure 4-5.

Go To Map A100, Entry Point A.

J

Determines if the diode CR-1 or the primary power transformer is causing blown fuse.

ENTRY POINTS

FROM	ENTER THIS MAP		
MAP NUMBER	ENTRY POINT	PAGE NUMBER	STEP NUMBER

No entries in this table

EXIT POINTS

EXIT THIS MAP		TO	
PAGE NUMBER	STEP NUMBER	MAP NUMBER	ENTRY POINT
2	003	A100	A
3	008	A100	A
3	011	A100	A
4	016	A100	A
4	017	A100	A
4	019	A100	A
5	024	A100	A
5	026	A100	A

001
(Entry Point A)

**********MAP SUMMARY**********

Maintenance Concepts For Modem Failure

This MAP is entered from Chapter 5 after the most probable cards were replaced and the IML test 0111 is still failing. The MAP is also entered from Chapter 2, step 8, Host Attachment Problem. The Maintenance Concept is to run the resident integrated modem self test whenever a flashing 3274 0111 code and display code of 0111 016 is indicated. If the self test fails, the failing card is indicated via the led indicators on the A1-D2 card. The self test and wrap test description and procedure is described in Chapter 5, Integrated Modem Section. The Host attachment and IML test 0111 MAP decisions will aid you in isolating other problems that can cause an integrated modem failure, such as: internal external cables, option wiring, incorrect card type, switch setting, power, etc.

Is the IML test stopping at Code 0111?

Y **N**

5 2
A B

002

- Perform and repeat the self test by depressing and holding the ALT switch in position 2.
- Wait about 10 seconds, the correct operator panel indicators are:

  1. Test indicator on.
  2. Good indicator flashes once (every 4 seconds) for each self test.
  3. Poor indicator off.

- Release the ALT switch.

Are indicators correct? See *A*

Y N

003

(Entry Point B)

- Replace the front end card G2 (Set Card Switches, para. 5.4.6.1).
- Replace the TAC card C2 (set card switches para. 5.4.8).
- Replace the processor card. See *B*
- Inspect for loose operator panel cable in board socket Z2.
- Inspect for loose cable plug P3, on operator panel indicator card. See Figure 4-13.
- If you have a failing led indicator, verify cable continuity from operator panel plug P3 to board socket Z2. See FO-9.
- Replace operator panel card.

Go To Map A100, Entry Point A.

004

Is the operate indicator on and the test indicator off?

Y N

005
Go to Step 003, Entry Point B.

006

When connected to the T.P. Network are the data quality indicators as expected (good led on, poor led off)? See *C*

Y N

3 3
C D

A
Releasing the ALT 2 switch stops the self test from running.

B
When integrated modem is 2400, 4800 BPS, processor card location is D2 or E2 when 9600 BPS. See FO-5.

C
When the 3274 phone line is connected to the master modem and the carrier detect signal is being received the good indicator goes on.

007
- Verify for loose internal I/O cable in board socket Y1.
- Check that communication cable on back of machine is securely connected.
- Check that communication cable is going to the correct phone line socket.

Is the good indicator still off?
Y N

008
Go To Map A100, Entry Point A.

009
- Perform the ALT 2 wrap test 0111 function by momentarily pressing IML, while holding ALT switch in position 2. (Ref. 5.4.5.4).

After about 1 minute, does the wrap test end with a code of 1111? *D*
Y N

010
- Replace front end card G2. Set card switches, para. 5.4.6.1.
- Replace card H2.
- Replace the receiver card F2.
- The problem is the 3274 is not receiving a carrier signal from the stand alone control modem. If possible use control modem off line procedures. See appropriate M.I.M.

011
- Replace front end card G2. (Set card switches para. 5.4.6.1).

Go To Map A100, Entry Point A.

012

Is the problem when communicating with the host system, and the data quality indicators are not as expected? (Good LED on, poor LED off)
Y N

D
When the carrier signal is being received from the control modem the end code is 1111.

013

Does the problem occur when communicating or failing to communicate with the host system?

Y N

014
- Go through MAP again.

Go to Page 1, Step 001, Entry Point A.

015
- If only the host-invoked Link Problem Determination Aid (LPDA) tests fail, verify correct setting for the integrated modem CU Address switch (see Figure).
- Verify that board option wiring is correct when point-to-point or multi-point attachment. See Figure 5-23.
- Verify that integrated modem card code function and transmission speed is correct for your machine attachment to control modem model. See Figure 5-24 and check card code function and see para. 5.4 through 5.4.3.

Was board option wiring and card code function correct for machine features?

Y N

016
- Modify as needed.

Go To Map A100, Entry Point A.

017
- Replace the front end card G2 (Set Card Switches, para. 5.4.6.1).
- Replace the TAC card C2 (Set card switches, para. 5.4.8).
- Replace the processor card. See *B*
- Replace HPCA card H2.
- Check the internal I/O cable in board position Y1, and external I/O communication cable for defects. See line flow Fig. 5-10.

Go To Map A100, Entry Point A.

018
- Check that transmit level switches are properly set on the front end card G2. See para. 5.4.6.1.
- Replace front end card G2. (Set card switches para. 5.4.6.1).

Are the quality indicators still not as expected?

Y N

019

Go To Map A100, Entry Point A.

5
G

020
- If possible try running at half the operating speed until T.P. line is repaired. Note: a reduction to half speed can only be set at the master modem. See para. 5.4.4 line attachments.
- If problem still exists use your support structure for aid.

021

Were the cards replaced as instructed in Chapter 5, failing 0111 code card chart?

Y N

022
- See Chapter 5 paragraph 5.4.5.6 and perform procedure.

023
- Replace other functional integrated modem cards that were not indicated to be replaced in card failure chart. See FO-5 for integrated modem card layout, card locations are G2, D2, F2, E2, H2, C2, C4.
- Verify for correct card/board plugging for machine integrated modem operating speed. See Figure 5-24 and verify card code on card connector.
- Check integrated modem for loose, not correctly installed or damaged top card crossover connectors.

Does IML test 0111 still fail?

Y N

024
Go To Map A100, Entry Point A.

025
- Measure for -8.5 V.D.C. at pin G2 D07.

Is the voltage within the limits of -7.8V to -9.3V?

Y N

026
- If voltage is missing, disconnect plug 1 at power supply No. 2 and verify socket J1 for -8.5V D.C. on pin 6. Repair cable/plug pin if needed. See Figure B-3.
- Replace TSR power supply No. 2.

Go To Map A100, Entry Point A.

027
- Use your support structure for aid.

ENTRY POINTS

FROM	ENTER THIS MAP		
MAP NUMBER	ENTRY POINT	PAGE NUMBER	STEP NUMBER
A10	A	1	001

001
(Entry Point A)

Maintenance Concepts For MAP A150

The map flow is developed to follow the sequence steps used in the setup instruction and customizing procedure forms. When a sequence step does not provide the proper results, a map path can be taken to provide a symptom fix, perform a procedure to help isolate the problem or duplicate the procedure steps to generate the problem. When an error condition occurs the map may provide a repair procedure or you are directed to use subsystem problem isolation in chapter 2 to isolate the error condition. This MAP uses card reference numbers to specify card socket locations. See FO-3 to convert card number to the real socket location.

CAUTION

Before removing cards or cables switch power off.

Is this an installation setup instruction problem? See *A*
Y N

002

Did a problem occur either during customization or when IML was performed following customization? See *B*
Y N

7A 2B 2C

A
Form GA-23-0047 is used by the customer for performing 3274 Model 51C, 52C set up procedures before customization.

B
The procedures that the customer uses to perform customization is contained in the IBM 3270 Information Display Planning, Set-Up and Customizing Guide GA27-2827 (1-sided diskette drive) and GA23-0065 (2-sided diskette drive).

003

Is the problem a failure to communicate with the Host System after a successfull customization and IML?

Y N

004
Go to subsystem problem isolation Chapter 2, step 1C.

005

- It is possible that the diskette configuration information is incorrect and is causing the Host System to fail. Perform the modification procedure of the Planning, Set-Up and Customizing Guide for displaying the configuration information and verify against 3274 customizing procedure form. See *B*
- Perform 'concurent test/2' procedure for displaying configuration table from the system diskette. This table contains the configuration options and if neccessary use table to verify that system attachment is correct. SEE CE Reference Summary SY23-0207 or M.C.M. SY27-2528 for /2 test information.
- Go to subsystem problem isolation Chapter 2, Step 1C.

006

Does the problem occur after diskette customization when an IML is performed? See *C*

Y N

007

After the IML of the feature diskette, do the 8421 indicators display a code of 0001? See *C*

Y N

6 3 3
D E F

C
This question refers to a step procedure when performing the initial customizing procedure in the Planning and Set-Up Guide.

008

- See figures in the initial customizing procedure of the Planning, Set-Up and Customizing Guide and look up the 8421 indicator code. Verify that the correct meaning/action fix was performed.
- To isolate the problem, replace the feature diskette with the system diskette. Perform an IML and verify the diagnostic tests ending code. See D. If an error occurs go to Chapter 2, step 1.
- Obtain another feature diskette and perform customization (IML) once more.
- Use your support structure for aid if problem is not found.

009

Does the 3278 display the proper starting customization screen format for sequence number 001 and XXXXXXXXXXXXXXXXXXX? *C*

Y N

010

- The following cards can be loose or defective; No. 1, 2, 3, 4, 5, 6. See *E*.
- Retry, customization with another display attached to Port 0.
- If problem still exists, obtain another feature diskette and perform customization once more.
- Go to subsystem problem isolation Chapter 2, Step 1C.
- Use your support structure for aid if problem is not corrected.

011

- Perform the next customizing step after the starting screen format is displayed. *C*

(Entry Point B)

Does a new sequence number appear on the display screen when Enter key was pressed? *C*

Y N

012

Does the entered response cause a 1 or 2 digit operator code displayed on the upper center of the display screen? *C*

Y N

4 4 4
G H J

D

- When a POR or IML with an 'uncustomized system' diskette is performed diagnostic tests 0000, 0001, 0010, and 0011 are run and complete with a 1101 code. If a display is attached to Port A0 test 0100 will also run. If the diskette is customized, tests 0101, 0110, and 0111 etc are also run. These tests may fail because your system diskette may not match your machine configuration.
- Code 0000 is the normal end with a previously 'customized system' diskette.

013
- Swap keyboard with another display.

014
- See figure in the initial customizing procedure of the Planning, Set-Up and Customizing Guide and look up the 1 or 2 digit operator code. Verify that the correct meaning/action fix was performed.
- Use your support structure for aid if problem is not found.

015

Is the verification response listing displayed with sequence number 900? *C*

Y N

016
- Enter another sequence response, and keep returning to Entry Point B until verification listing with sequence number 900 is displayed.

Go to Page 3, Step 011, Entry Point B.

017
- Verify that all entries on display screen compare with customizing procedure form.
- Change the entry for sequence 900 to a '1' and press the Enter key.

Does the verification listing contain any responses that are intensified? *C*

Y N

018

After 2 minutes or less, do the 8421 operational indicators flash either 1011 or 1101? *C*

Y N

019

- See figures in the initial customizing procedure of the Planning, Set-Up and Customizing Guide and look up 8421 indicator code. Verify that the correct meaning/action fix was performed.
- Verify that the configuration information was correctly entered. Perform the modification procedure of the Planning and Set-Up Guide for displaying the configuration information and verify against 3274 customizing procedure form. See *B*
- If an uncustomized system diskette is being customized the following cards in the A1 board can be loose or defective: No. 10, 22, 1, 2, 3, 4, 5, 6. See *E*.
- Obtain another feature diskette and perform customization once more.
- Use your support structure for aid if problem is not corrected.

020

- Follow the initial customized procedure, replacing the feature diskette with the system or language or RPQ diskette.

When performing procedures without feature diskette, did the 8421 indicators display the proper code/codes? *C*

Y N

021

- See figures in the initial customized procedure of the Planning and Set-Up Guide and look up the 8421 indicator code. Verify that the correct meaning/action fix was performed.
- If an 'uncustomized system' diskette is being customized the following cards in the A1 board can be loose or defective: No. 1, 2, 3, 4, 5, 6. See *E*
- Obtain another system diskette and perform customization once more.
- Use your support structure for aid if problem is not corrected.

022

- Perform an IML startup.

Go to Page 6, Step 024, Entry Point C.

E

These cards either were not tested when the 'uncustomized' system diskette was run or can cause customizing problems. The cards can only be tested after a successful customization when an IML startup is performed. At this time a diagnostic test will test these cards.

023

- If a 1 or 2 digit operator code is displayed on the upper center of the display screen, then see Figures in the initial customizing procedure of the Planning and Set-up Guide and look up the operator code. Verify that the correct meaning/action fix was performed.
- The intensified response/responses are caused whenever invalid feature combinations were entered. Call planner or prodject leader and indicate which sequence numbers are intensified. Note: The Planning, Set-up and Customizing Guide GA27-2827 and the Customizing Guide GA23-0065 describe sequence number function.
- Use your support structure for aid if problem is not corrected.

024
(Entry Point C)

Do the IML diagnostic tests fail with a flashing 8421 code value of 0101, 0110, 0111, 1000, 1001 or 1011? *C* See *H*

Y N

025

Do the IML diagnostic tests fail with any other 8421 code? *C*

Y N

026

F
As the IML diagnostic tests run, the operational indicators sequence and when successfull, all the indicators go on. The indicators remain on as the operational code is loaded and when successfull all the indicators go off.

After the IML diagnostic tests run successfully, does the loading of the operational code cause an ending 8421 code value of 0000? *F* *C*

Y N

027

- An error was detected while the operational code was loaded. Go to Chapter 2 and see Step 6 'display symbols' and Step 7 'operational indicators'.

028

- Successfull IML end.

029
- Go to subsystem problem isolation Chapter 2, Step 1C.

030
- A wrong customization entry for some sequence numbers will cause a flashing 8421 error indication when an IML is attempted. Perform the modification procedure of the Planning, Set-Up and Customizing Guide, for displaying the configuration information. SEE FIGURE in the initial customizing procedure and look up the 8421 indicator code caused during IML. Verify the correct meaning/action fix was performed. *G*
- The 3274 can be failing due to the additional IML diagnostic testing after customization.
- Go to subsystem problem isolation Chapter 2, Step 1C.

031
(Entry Point D)

After power on, are the 8421 indicators 'ending' with a value of 1101? *D*.
Y N

032

After power on, are the 8421 indicators 'ending' with a value 0000? *D*
Y N

033
- Verify that the 3274 has the proper system diskette.
- Go to subsystem problem isolation Chapter 2, Step 1C.

034
- System diskette is already customized and 3274 is now ready for recustomizing.

035
- System diskette is uncustomized. Set up is complete. If preparation for customizing is complete the 3274 is now ready for customizing.

G
If the error code is a flashing 0110 (See *H*), verify that the response to customization sequence number 351 (HPCA or CCA) matches the feature installed. Verify card part numbers for card Nos. 13, 32 and 33. See Figure A-5.

H
Codes 0101,0110 and 0111 may flash continuously for 5 seconds, then alternate with another continuous code for 3 seconds. Use the flashing code as the failure indicator.

Chapter 4. Removal and Replacement Procedures

CAUTION
Safety glasses must be worn when performing removal and replacement procedures.

DANGER
Before starting any procedure, be sure that the control unit is completely powered off and that the power cord plug is removed frcm the building power receptacle.

4.1 Machine Access – Cover Removal/CE Manuals (Figure 4-1)

1. Place the [1] / [0] (on/off) switch in the [0] position.
2. Turn the cover latches (A) to the open position by using a key-hex actuator (B) or a No. 4 metric (No. 156 domestic) Allen wrench.
3. Lift the cover straight up to remove.

   The CE maintenance information manuals are located in the document storage compartment.

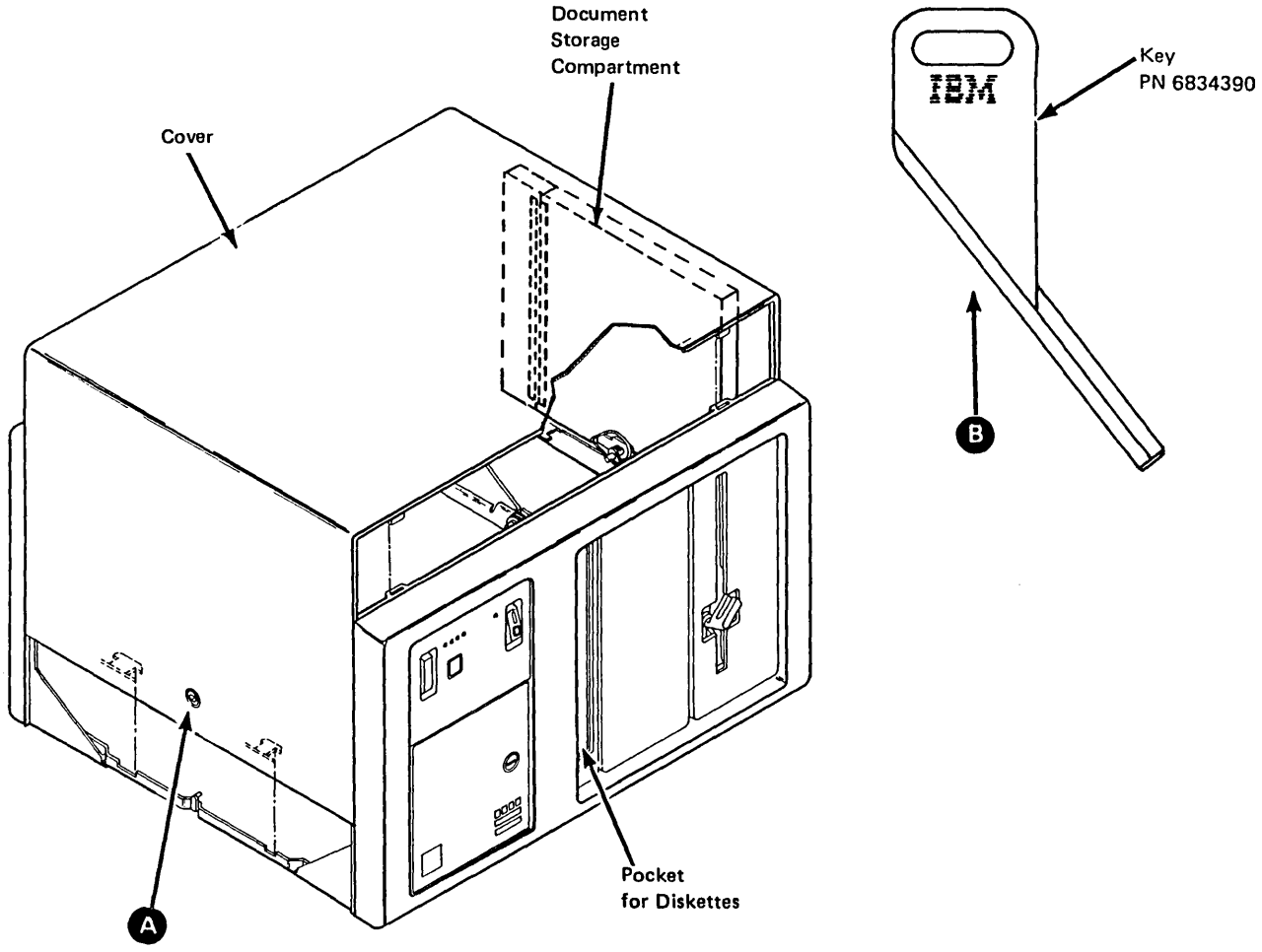

Figure 4-1. Machine Access, Cover

4.2 Machine Access – Board/TSR Supply (Figure 4-2)

1. Place the [I]/[O] (on/off) switch in the [O] position.
2. Loosen the shipping bolts (A) if necessary and swing the gate open (B).
3. Depress the spring latches (E) and open the low-voltage power supply (LVPS) housing (D).

Warning: When the board is in the service position, the card/connector rows (1, 2, 3, 4, 5, 6) are inverted. Be careful when identifying the correct position of any card or connector.

4. To close the gate assembly, reverse these steps and depress the gate latch (G) to allow the gate to close.
5. Card retainer (C) can be discarded after removal.

CAUTION
When the gate is being closed, be careful not to allow the hand and fingers between the gate corner and housing frame (F).

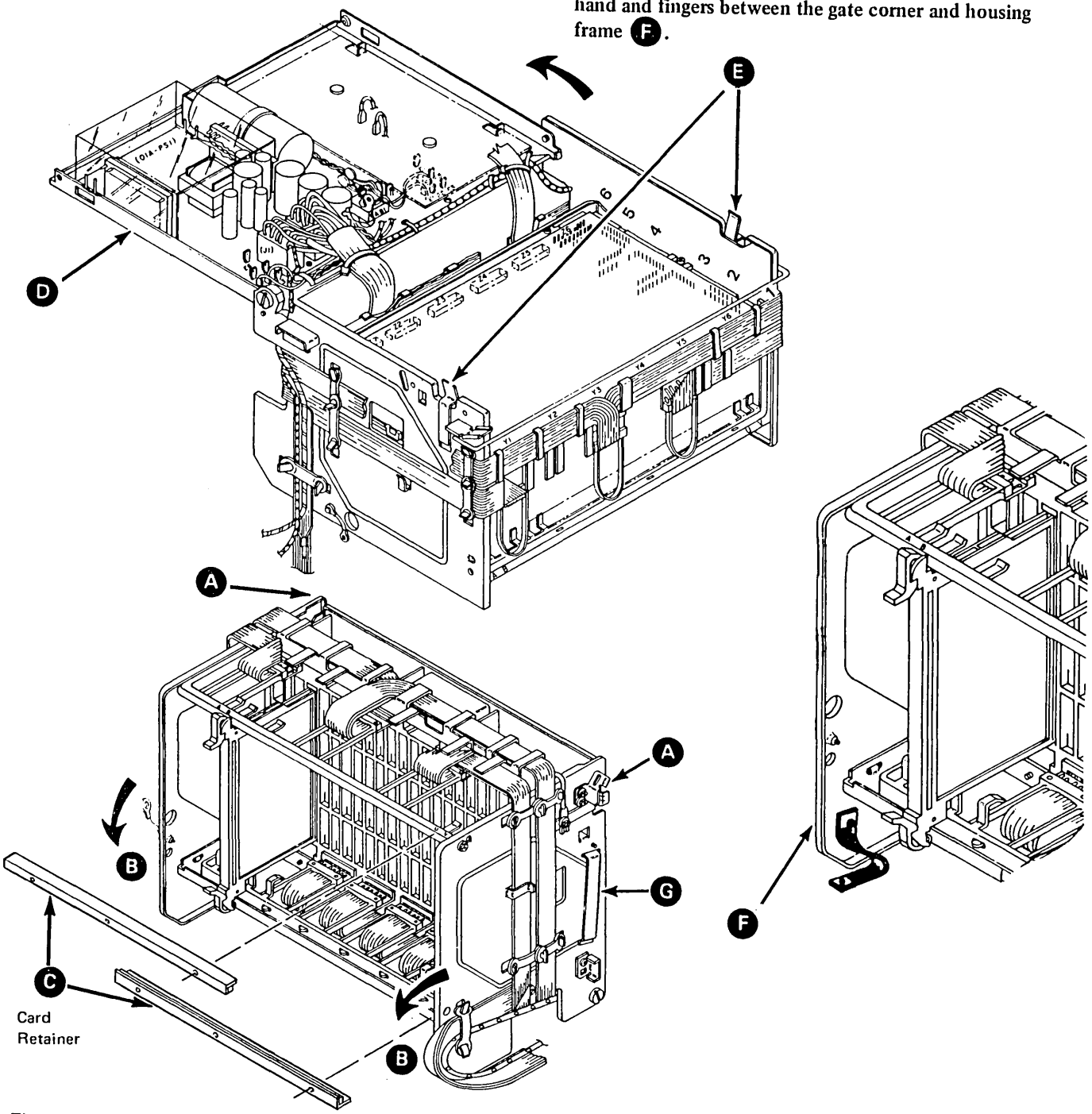

Figure 4-2. Machine Access, Board/TSR Supply

4.3 Card Removal and Replacement (Figure 4-3)

4.3.1 Removal

1. Place the [I] / [O] (on/off) switch in the [O] position.
2. Unlock and rotate the extractor (A) levers simultaneously at the top and bottom until the card disengages (as shown below).

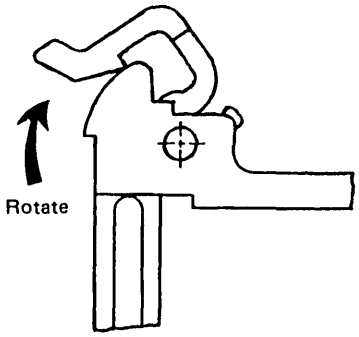

4.3.2 Replacement

1. Open both extractor levers fully. Insert the card holder tracks into the front guide fingers (card components towards right). *Do not use the extractor levers to reseat the card.* Apply firm finger pressure to the card holder (B) (or connector housing for double-ended cards) to ensure proper contact seating.
2. After reseating, press firmly on the indicated extractor levers and rotate them simultaneously until latched.

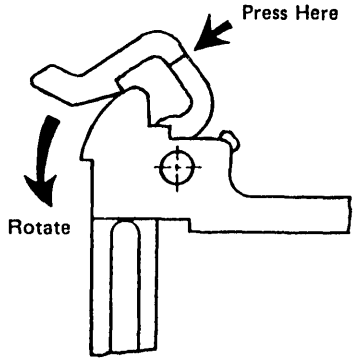

4.4 Internal Cable/Connector, Removal and Replacement (Figure 4-3)

1. Push in the tab (C) on the U-shaped retainer to disengage it from the slot in the gate, and pull the connector free from the pins.
2. To replace, reseat the connector, and ensure that the tab in the retainer is latched in the slot in the gate.

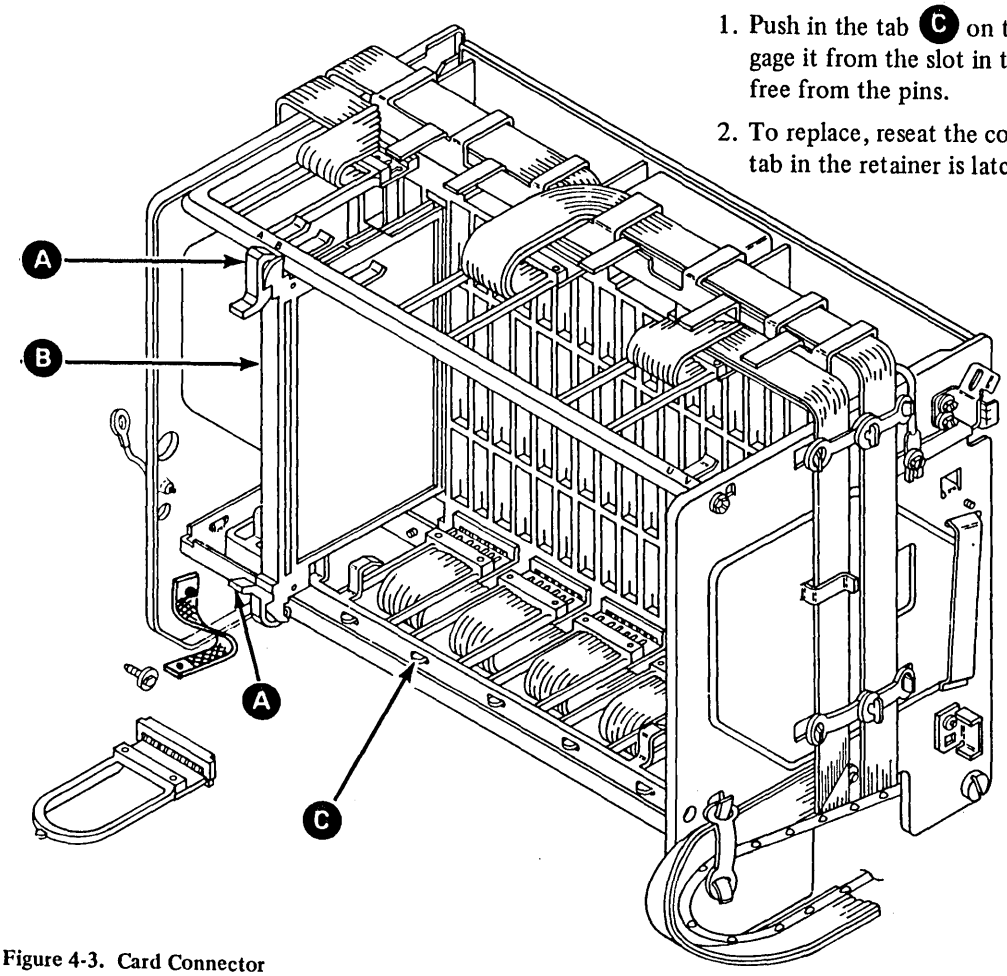

Figure 4-3. Card Connector

4.5 Prime Power Box, Removal and Replacement (Figure 4-4)

DANGER
Input voltage is present in the On/Off switch housing when power is turned off (⏐1⏐ / ⏐O⏐ switch in the ⏐O⏐ position).

1. Place the ⏐1⏐ / ⏐O⏐ (on/off) switch in the ⏐O⏐ position.
2. Remove the power cord plug from the building power receptacle.
3. Remove the power cord plug located at the rear of the 3274.
4. Disconnect all the connectors (A) from the prime power box.
5. Remove the two hex bolts (B) from the upper and lower mounting brackets.
6. Disconnect the ground wire (C) from the machine chassis.
7. Remove the prime power box. To reinstall, reverse these steps.

DANGER
You must reconnect the green-yellow wire to ground (removed in step 6).

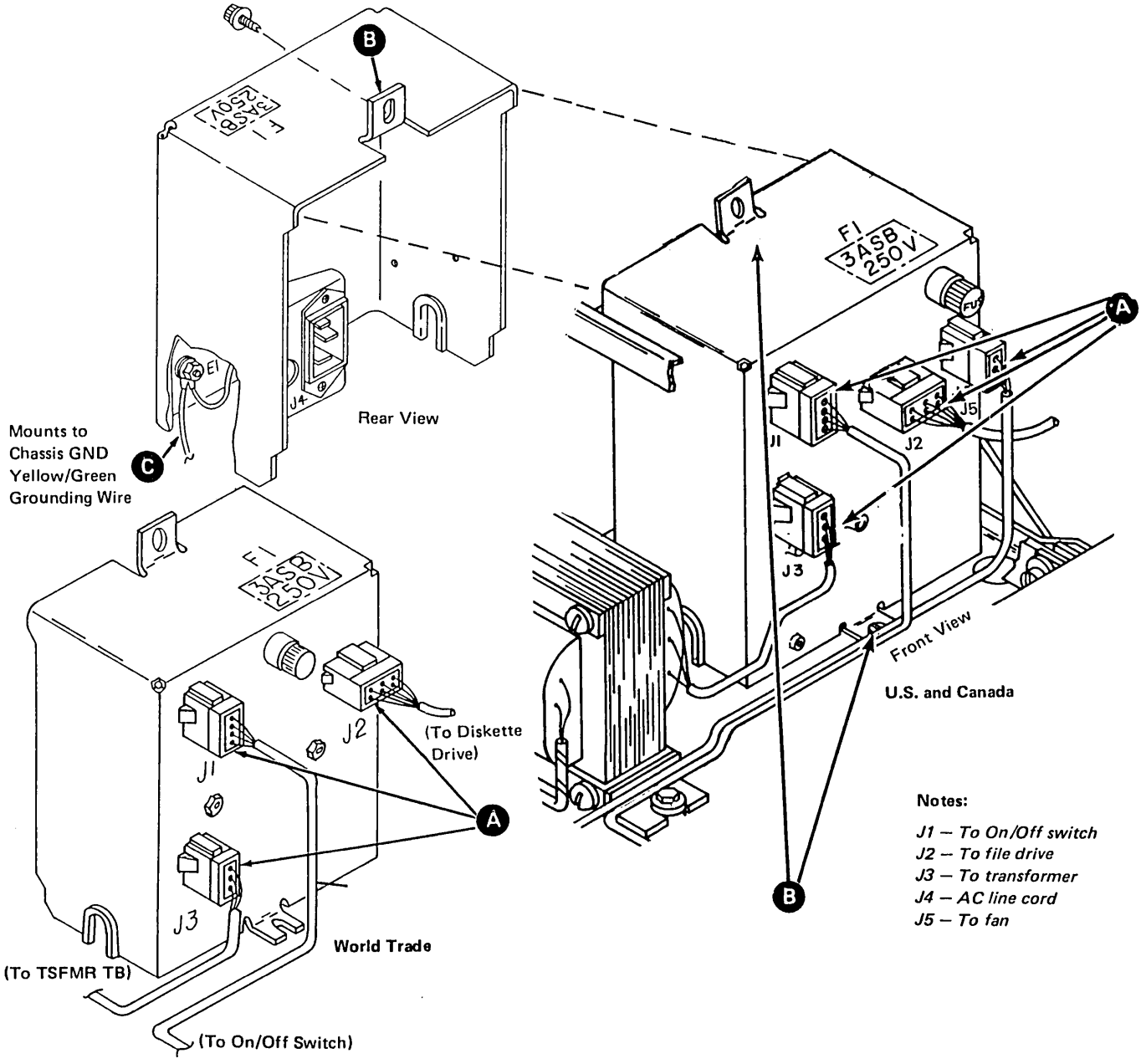

Figure 4-4. Prime Power Box

4.6 Prime Power Transformer, Removal and Replacement (Figure 4-5)

1. Place the [I] / [O] (on/off) switch in the [O] position.
2. Remove the power cord plug from the building power receptacle.
3. Open the gate (paragraph 4.2).
4. Disconnect the J3 connector (A) from the prime power box.
5. Disconnect the wires leading to the diode assembly (B) (wires 3, 4, or 7, 8 or 11, 12). See Figure 4-7 (the diode assembly is identified as CR1).
6. World Trade countries only – Remove the fan leads from the transformer terminal strip. Note the location of wires for use in reassembly. See Figure B-6.
7. Remove the three hex mounting bolts (C) and remove the transformer.

8a. U.S. and Canada only – To reinstall, reverse these steps.

8b. World Trade countries only – Reconnect the fan leads and connect the plug P3 cable at the transformer terminal strip, using the old transformer as a guide. To reinstall, reverse these steps.

Warning: Verify that the starwashers are replaced between the transformer bracket and the rear casting.

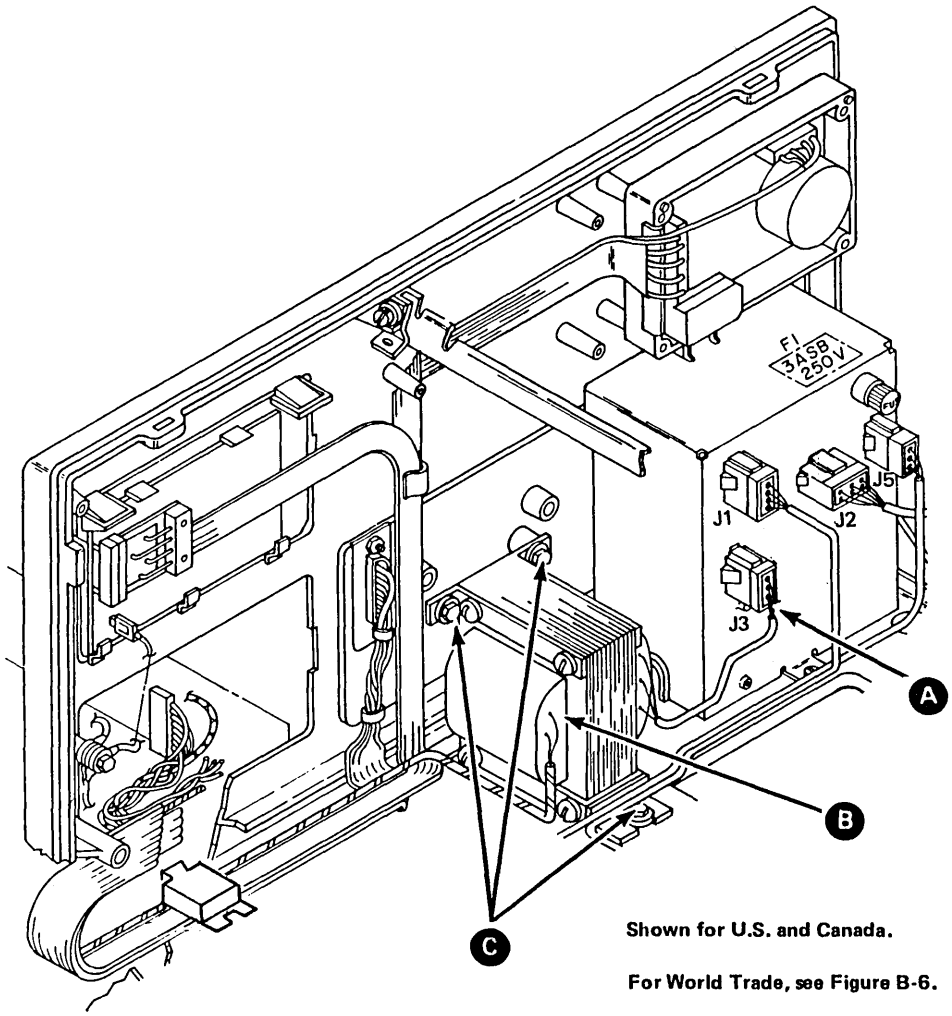

Figure 4-5. Prime Power Transformer

4.7 Fan Assembly, Removal and Replacement (Figure 4-6)

1. Place the [1] / [O] (on/off) switch in the [O] position.
2. Remove the power cord plug from the building power receptacle.
3. Open the gate (paragraph 4.2).
4. Remove the four hex mounting bolts (A) from plenum.
5. Disconnect the plug (B) from the fan assembly and disconnect the green and yellow grounding wire (C).
6. Remove the fan assembly (two fans are present in machines with 2400, 4800, or 9600 bps integrated modem).
7. Remove the four screws (D) securing the fan to the shock mount bracket.
8. Remove the fan.
9. To reinstall, perform the sequence of steps in reverse.

Note: *Observe direction of air flow* (E).

DANGER
You must reinstall the green-yellow grounding wire removed in step 5.

Early Version

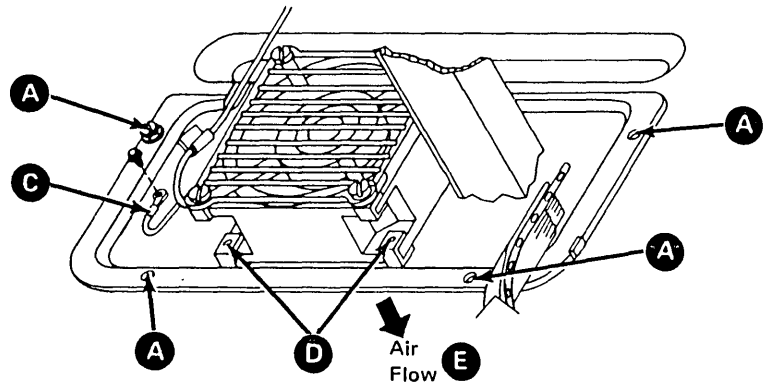

Later Version

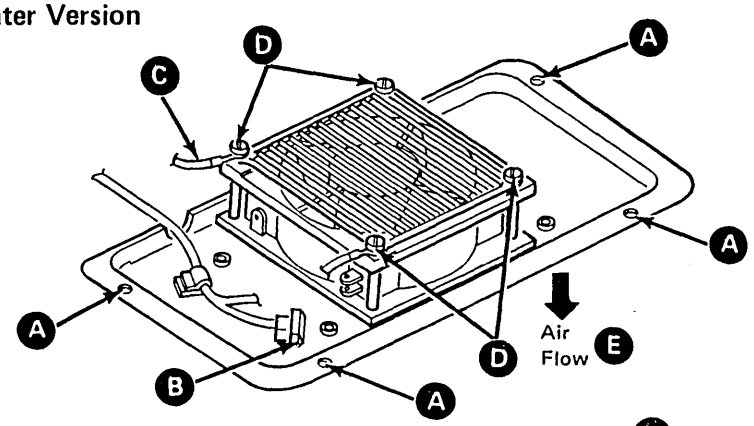

Two-Fan Version

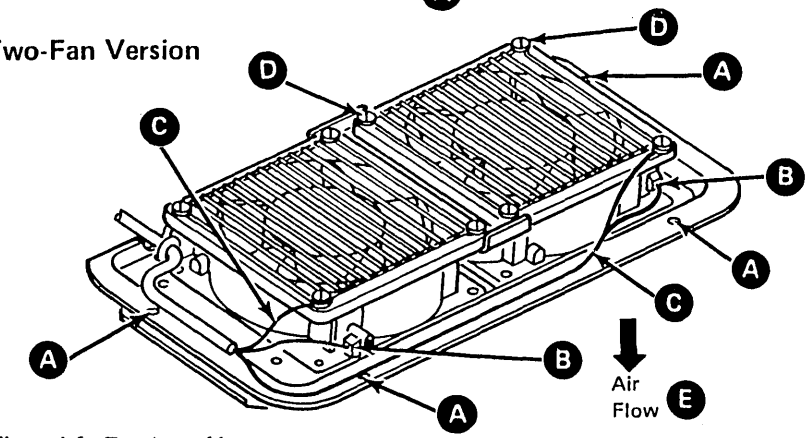

Figure 4-6. Fan Assembly

4.8 Diode Assembly, Removal and Replacement (Figure 4-7)

1. Place the [I] / [O] (on/off) switch in the [O] position.
2. Remove the power cord plug from the building power receptacle.
3. Open the gate and power supply housing (paragraph 4.2).
4. Remove the slip-on leads to the diode (CR1) assembly (A).
5. Remove the diode hex mounting bolt (B) and remove the diode assembly.
6. To reinstall, reverse these steps and use Figure 4-7 to identify diode slip-on pins.

Warning: Be sure that the diode wires are correctly installed on the diode assembly. The TSR power supply will be damaged if these wires are reversed.

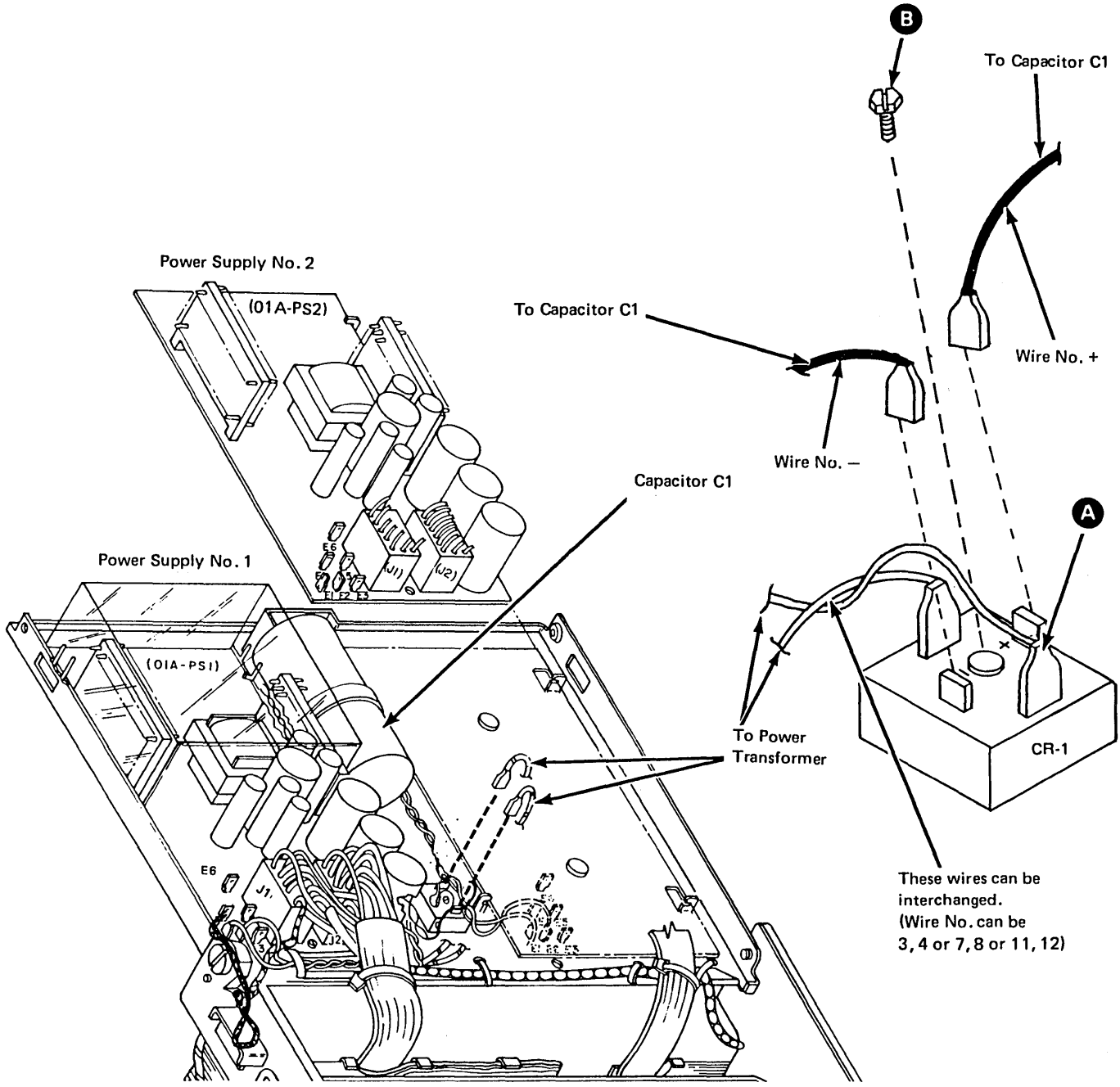

Figure 4-7. Prime Power Diode Assembly (CR1)

4.9 Input Filter Capacitor, Removal and Replacement (Figure 4-8)

1. Place the [I] / [O] (on/off) switch in the [O] position.
2. Remove the power cord plug from the building power receptacle.

DANGER
The input capacitor has 60V at its terminals when power is on.

3. Open the gate and power supply housing (paragraph 4.2).
4. Remove the tie-down strap (A).
5. Unsnap the shield over the capacitor terminals (B).
6. Disconnect the leads and resistor from the capacitor terminals.
7. To reinstall, reverse these steps.

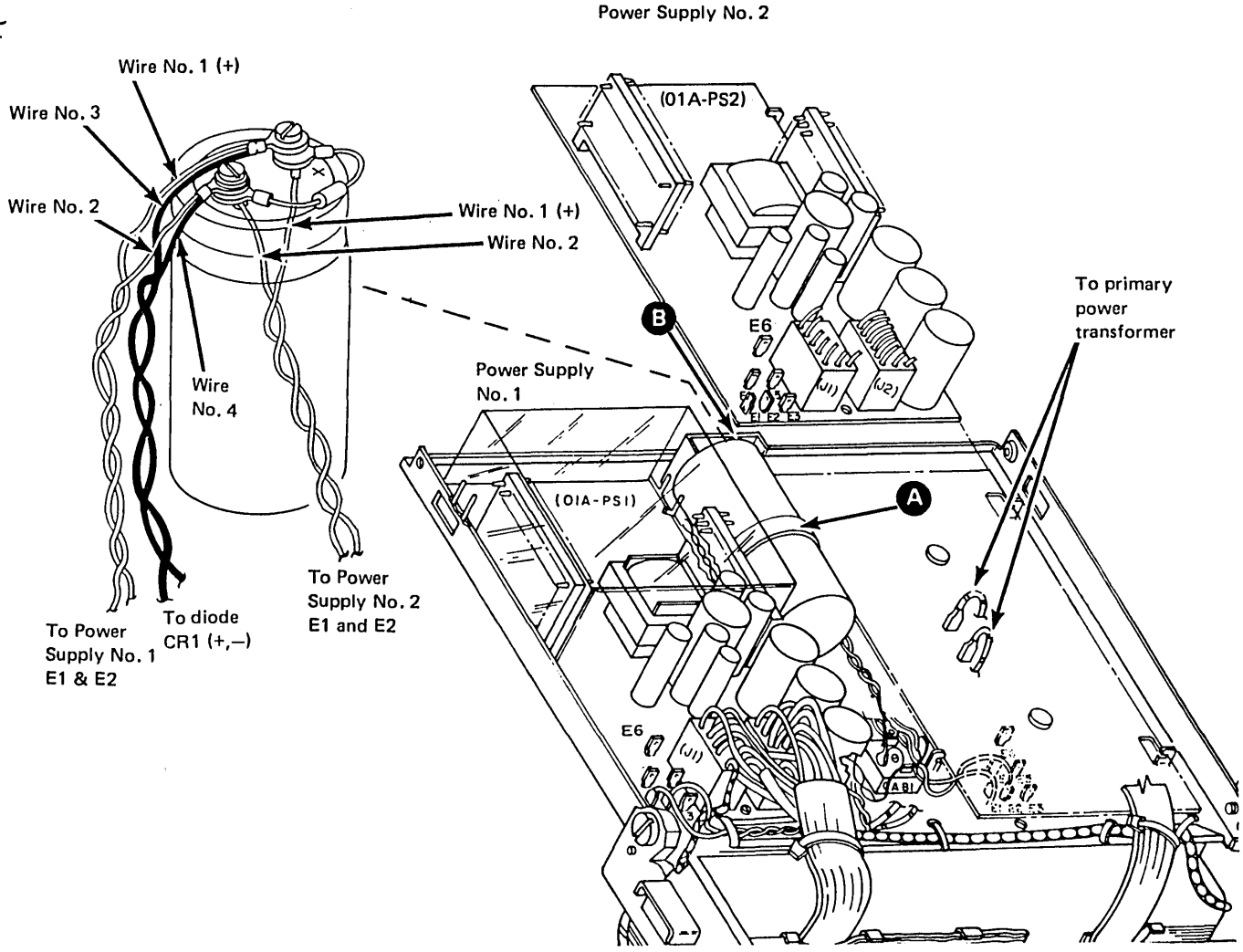

Figure 4-8. Prime Power Input Filter Capacitor

4.10 TSR Power Supply, Removal and Replacement (Figure 4-9)

CAUTION
The temperature of the TSR transformer (A) may exceed safe-handling limits.

1. Place the [I] / [O] (on/off) switch in the [O] position.
2. Remove the power cord plug from the building power receptacle.
3. Open the gate and power supply housing (paragraph 4.2).
4. Remove the plastic shield (to be reinstalled on the new supply) (B).
5. Disconnect J1 and J2 connectors from the TSR Power Supply (C).
6. Disconnect the push-pin wires from E1, E2, and E4 (D)
7. Remove the hex holding screw located under the cable (E) (near the hinge).
8. Slide the power supply out of the guides (away from hinge).
9. To reinstall, reverse these steps.

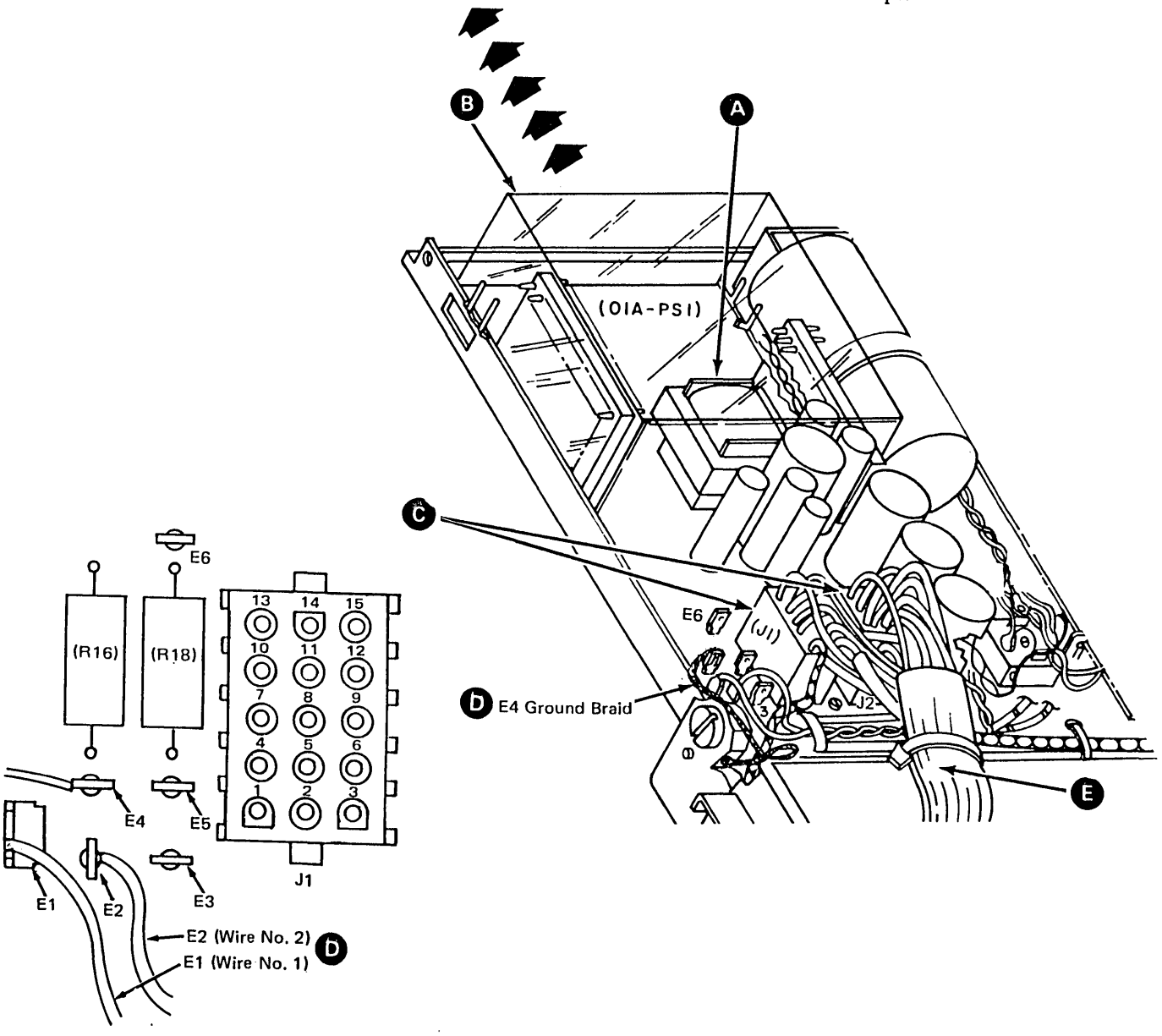

Figure 4-9. TSR Power Supply

4.11 I/O Panel – Driver/Receiver, Removal and Replacement (Figure 4-10)

1. Place the ⏽I⏽ / ⏽O⏽ (on/off) switch in the ⏽O⏽ position.
2. Remove the power cord plug from the building power receptacle.
3. Open the gate (see paragraph 4.2).
4. To remove the I/O panel, depress the two locking tabs (A) on top of the I/O panel.
5. To remove the driver/receiver card, depress the card locking tab (B) and remove the card.
6. To reinstall, reverse these steps.

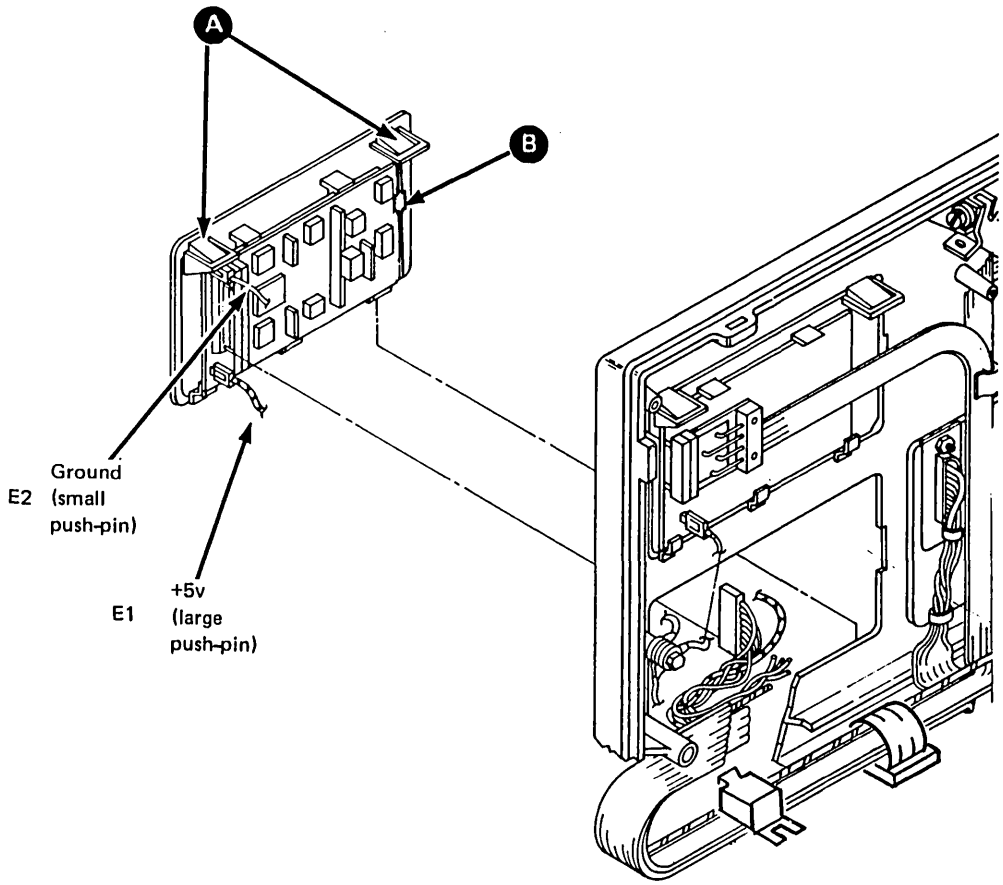

Figure 4-10. I/O Panel, Driver/Receiver Card

4.12 Diskette Drive, Removal and Replacement (Figure 4-11)

1. Place the [1] / [O] (on/off) switch in the [O] position.
2. Remove the power cord plug from the building power receptacle.
3. Remove the RF shield, if installed (not on later machines), by loosening the three bottom holding screws, and by removing the top screw (A).
4. Disconnect the J2 connector from the prime power box (B).
5. Disconnect the black ground wire (C) (I/O cable DC return) from the ground screw.
6. Unplug the I/O cable (D) from the file control card.
7. Loosen the two locking screws (E) on the front side of the unit and remove the two rear screws completely (F). Slide the unit out toward the front of the machine.
8. Remove the decorative bezel (G) by placing the operator knob in the closed position and pulling the bezel free from the drive unit.
9. To reinstall, reverse the above steps.
10. To remove the file control card, refer to paragraph E.4.8.

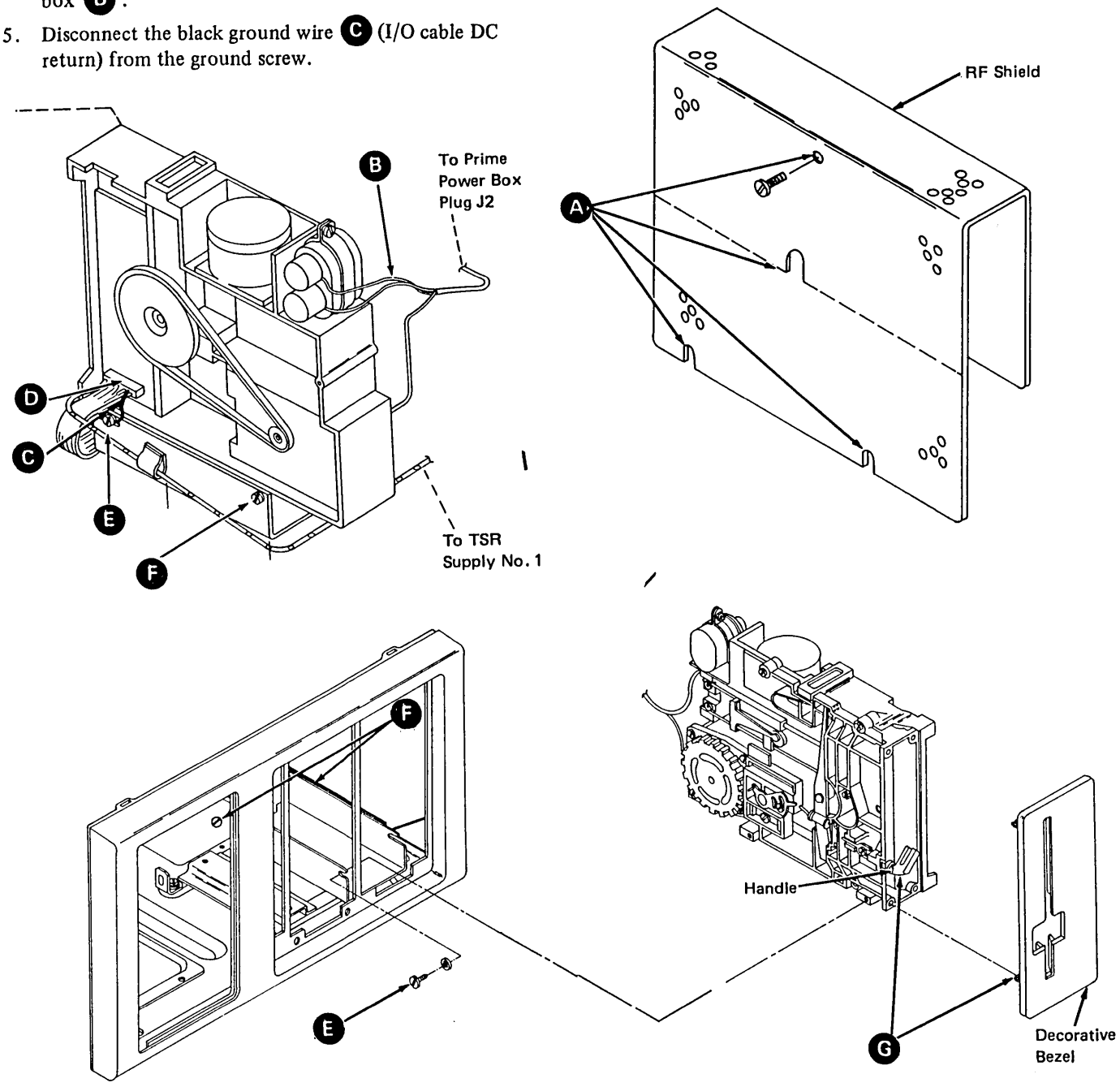

Figure 4-11. Diskette Drive

4.13 Line Plate Card, Removal and Replacement (Figure 4-12)

1. Place the [1] / [O] (on/off) switch in the [O] position.
2. Remove the power cord plug from the building power receptacle.
3. Remove the three screws holding the line plate (A).
4. Remove the line plate cover (B).
5. Disconnect cables going to the line plate card (C).

Warning: For integrated modem multipoint attachment, when the 3274 I/O telephone cable is unplugged, the telephone socket must be terminated with 600-ohm resistors. The 600-ohm terminating plug (shown in Figure 5-11, Part 1 of 2) can be used.

6. Remove the two screws holding the line plate card and the green and yellow grounding wire (D).
7. Remove the line plate card.
8. Install the line plate jumpers (use the old line plate card as a guide).
9. To reinstall, reverse these steps.

DANGER
You must reinstall the yellow-green grounding wire removed in step 6.

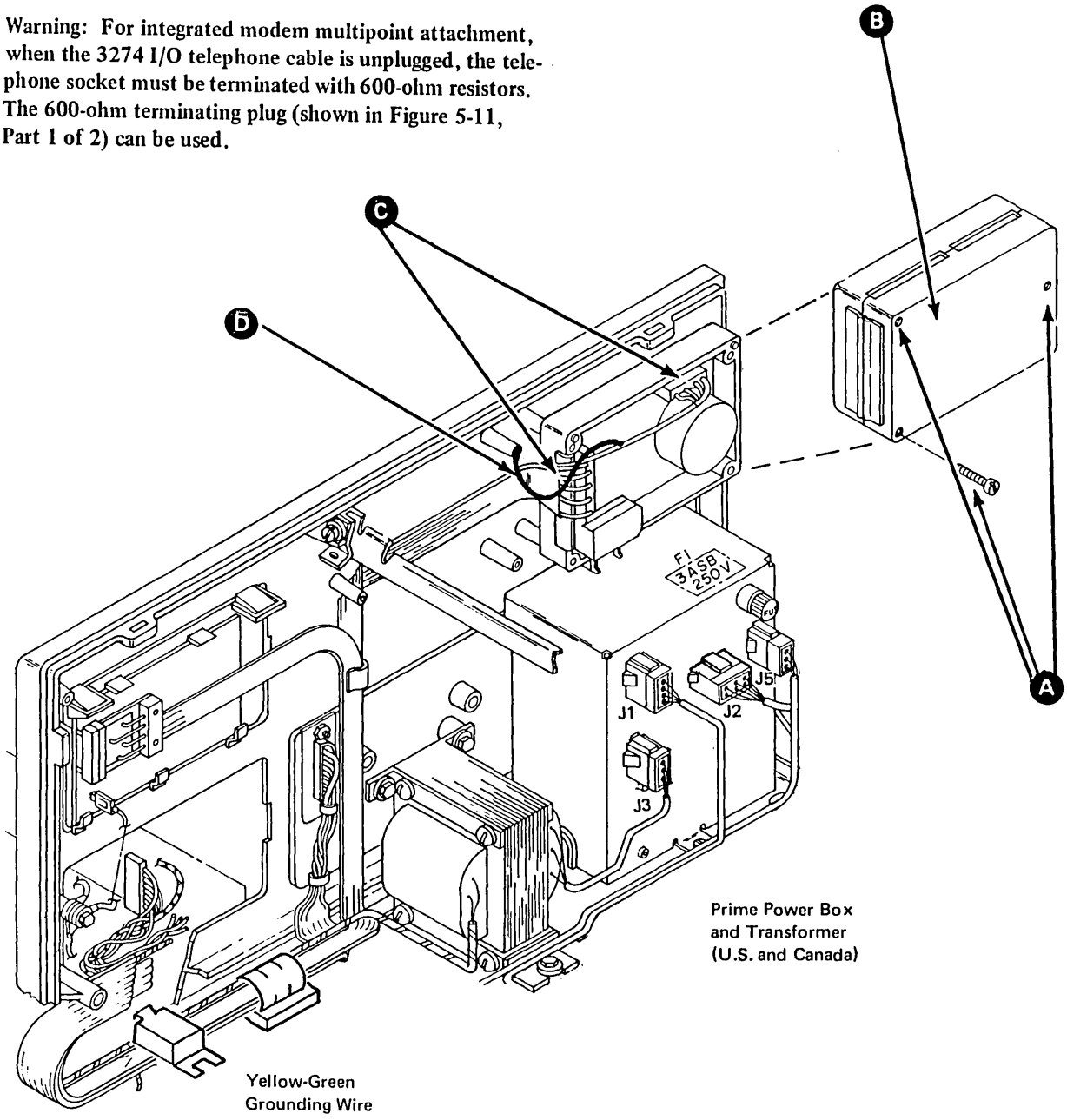

Figure 4-12. Line Plate Card (World Trade Countries)

4.14 Operator Panel/Indicator Card, Removal and Replacement (Figure 4-13)

1. Place the [I] / [O] (on/off) switch in the [O] position.
2. Remove the power cord plug from the building power receptacle.
3. Open the gate (paragraph 4.2).
4. Open the customer access panel door (A).
5. Depress the four locking tabs (B) on the back of the operator panel and remove the panel.
6. Disconnect the J1, J2, and J3 (2400-, 4800-, and 9600-bps Integrated Modems) connectors (C) from the indicator card.
7. Depress the two panel tabs (D) to release the card.
8. To reinstall the panel, reverse these steps. Do the following while reinstalling the card and panel:
   a. Card – Align the card holes (E) with the panel stems and insert the card edge (F) into the panel slot. Ensure that the power-on indicator is properly aligned, then press down on the card to position it under the two panel tabs.
   b. Panel – Insert the panel into the gate at the bottom edge at a slight angle, with the panel door in the open position.

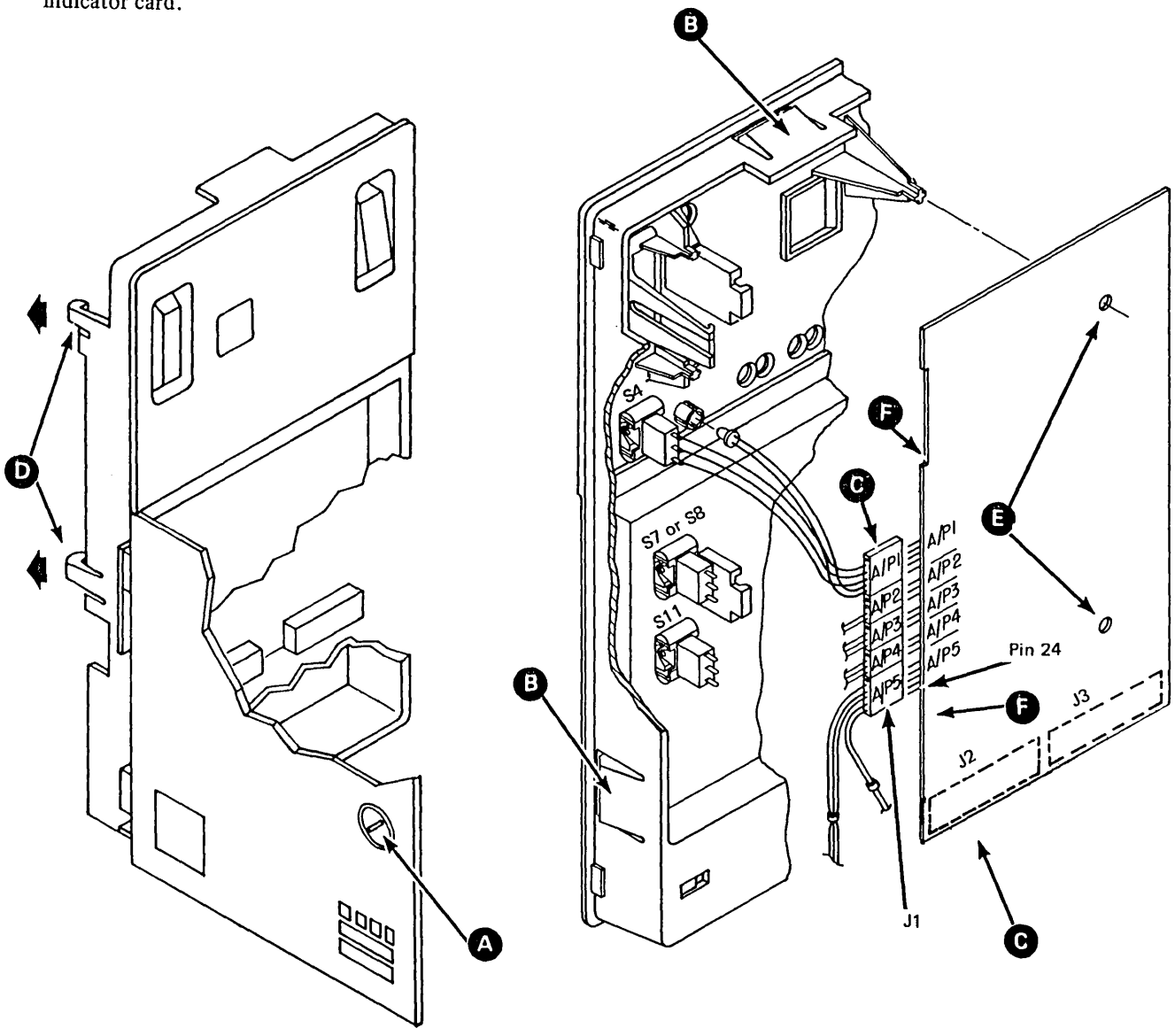

Figure 4-13. Operator Panel/Indicator Card

4.15 Logic Board, Removal and Replacement (Figure 4-14)

1. Place the [I] / [O] (on/off) switch in the [O] position.
2. Remove the power cord plug from the building power receptacle.
3. Remove all the cards from the board.
4. Disconnect the cables from the Y and Z rows.
5. Remove the 12 hex holding screws and retainers (A), located on the wiring side.

Note: *Your board may have the new retainer* (B).

6. Lift the board out (wiring side up).
7. Depending on the machine features, wire the replacement board as follows:
   a. If the 3274 is a Model 51C with board PN 5699828, and control storage is equal to 64K (see Figure 2-4), add a yellow wire from Q2G02 to Q2G12.
   b. If the 3274 is a Model 51C with board PN 5699828 and *does not* have the Type B Adapter feature cards, add a yellow wire from E2G02 to E2B08.
   c. If the 3274 contains the 1200-bps Integrated Modem feature, perform the following:
      - For a two-wire Nonswitched Network, add the following yellow wires –

        G2G02 to G2G09
        G2J05 to G2J13

      - For a Model 51C with the card No. 14 Function
        – 1200-bps Integrated Modem Card (Switched, Auto Answer)
        – 1200-bps Integrated Modem Card (Nonswitched, Auto Answer SNBU)

        Refer to Figure A-5 for part numbers and function; modify board wiring as shown below:

Board PN	Board at EC Level	Remove Wire From	Remove Wire To	Delete Board Land	Add Wires Wire PN	Add Wires From	Add Wires To
5699828	EC 788931	G2B02	H5D12	Ream R6B02 (on wiring side) Deleting it from R6C04 and H5D12	811695	G2B02	R6B02
	EC 862637					H5D12	R6C04
5699828	EC 876269	G2B02	H5D12	——	——	——	——
	EC 862635			——	——	——	——
5643329	EC 867313	G2B02	H5D12	——	——	——	——
6226635	No rework required						

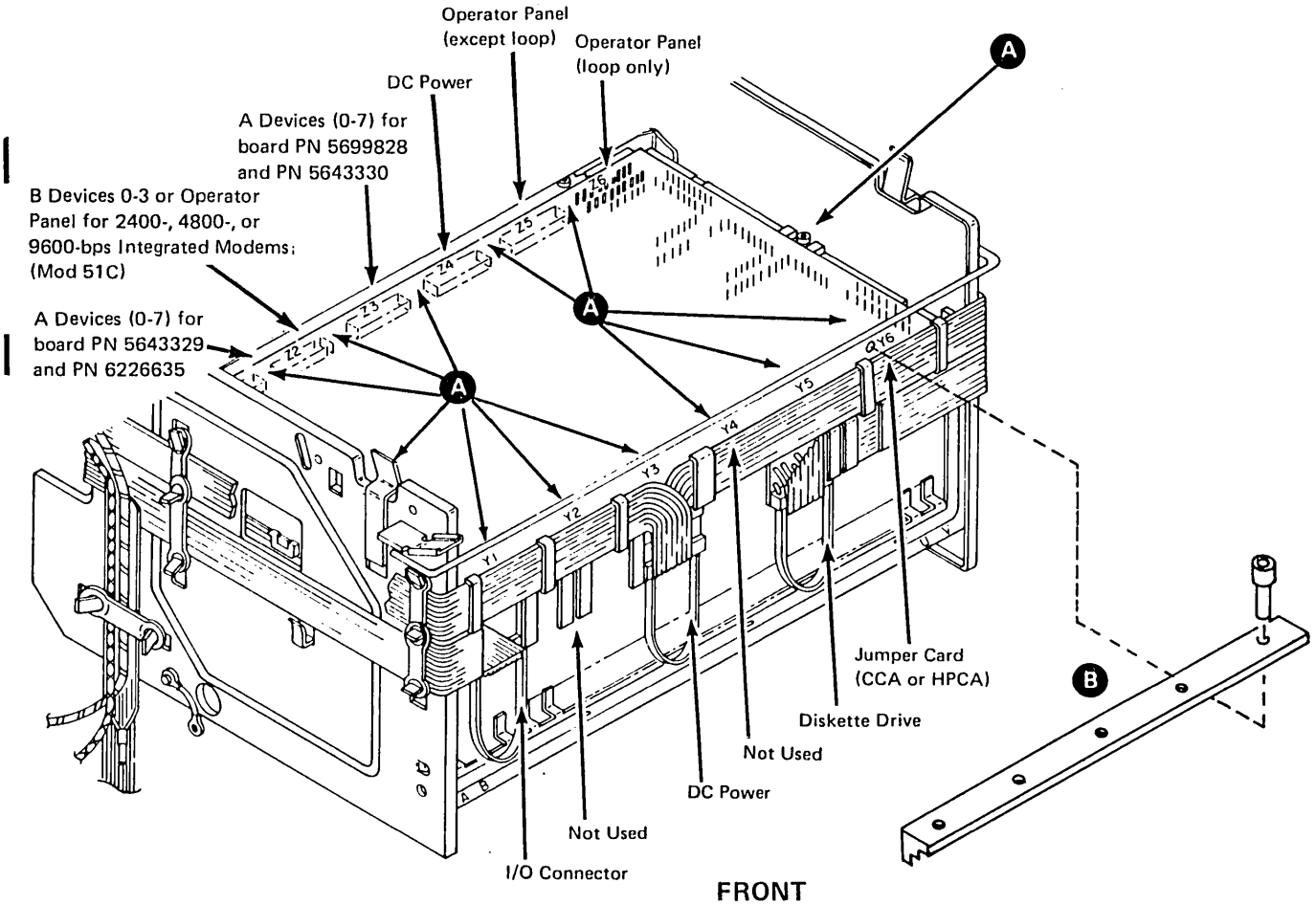

Figure 4-14. Logic Board Assembly

d. If the 3274 is a Model 52C and card socket E2 is not used, modify as shown below:

Board PN	Board EC	Wire	From	To
5643330	788928	Yellow	E2U10	E2S10
5643330	876288	Yellow	E2U10	E2S10
5643330	876270	Yellow	E2U10	E2S10
5643330	867281	Yellow	Already Wired	

e. Add or remove board wire depending on loop feature card G2 and board PNs as shown below:

Loop Card G2	Board PN	Wire Yellow	From	To
Installed	6226635	Remove	T1C11	T1B11
Not installed	4599828 5643329 5643330	Add	T1C11	T1B11

f. If the 3274 is a Model 51C and contains the 2400-, 4800-, or 9600-bps Integrated Modem feature, the board is wired for either point-to-point or multi-point (see paragraph 5.4.9.1).

Note: *See paragraphs 5.4.9.2 through 5.4.9.4 for other board wiring that is not normally wired at the factory.*

g. If the 3274 Model 51C contains the Response Time Monitor card, perform one of the two wiring procedures below, the one appropriate for your board type:

1. Wiring rework for board with/without Type B Adapter (A1B4). See Figure 1-3.

Delete	Check for Deletion
B4B13 (card side)	B5D02
B4B13 (pin side)	A3D02
Add	**Wire Length**
B2D13 to B5B09	203.2 mm (8.0 in.)
A3D02 to B5D02	177.8 mm (7.0 in.)
B5D04 to B4B13	101.6 mm (4.0 in.)

2. Wiring rework for board with/without 2400-, 4800-, and 9600-bps Integrated Modem (A1C4). See Figure 1-5.

Delete	Check for Deletion
C4B13 (card side)	C5D02
C4B13 (pin side)	M4B12
Add	**Wire Length**
G2D11 to C5B09	228.6 mm (9.0 in.)
M4B12 to C5D02	228.6 mm (9.0 in.)
C5D04 to C4B13	101.6 mm (4.0 in.)

8. To reinstall the board, reverse the board removal steps. Ensure that the cables, cards, and crossovers are inserted into their proper socket locations (see Figure A-12, pages FO-3 and FO-5).
9. If the machine has the Encrypt/Decrypt feature (card No. 21), a new master key must be entered. See Chapter 6, paragraph 6.4.

4.16 Operator Panel Switches, Removal and Replacement (Figure 4-15)

4.16.1 On/Off Switch

1. Place the [I] / [O] (on/off) switch in the [O] position.
2. Remove the power cord plug from the building power receptacle.
3. Open the gate assembly (paragraph 4.2).
4. Remove the on/off switch as follows:
   a. Disconnect the J1 connector from the prime power box.
   b. Press the plastic latch (A) at the rear of the switch and remove the switch.
5. To reinstall, reverse these steps.

4.16.2 Operator Panel Switch (Not Card-Mounted)

1. Remove the operator panel switch (not card-mounted) as follows:
   a. Disconnect the J1 connector from the indicator card (B).
   b. Remove the front panel decal, or cut the decal around the switch to allow removal.
   c. Push the switch from the pin side (C) to release the switch spring from the panel and remove the switch.
   d. Order a new front panel decal if it was damaged during switch removal.
2. To reinstall the operator panel switch assembly, reverse these steps.

4.16.3 Encrypt/Decrypt Switch

See Figure D-9 for wiring.

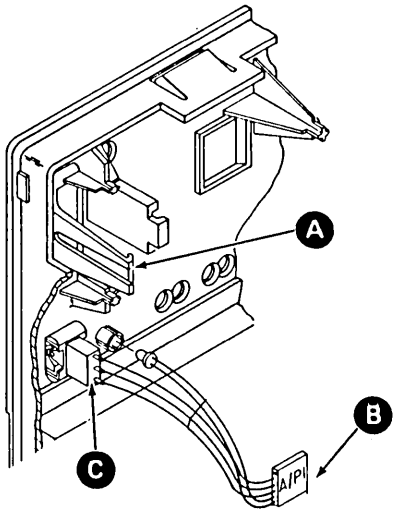

Rear View

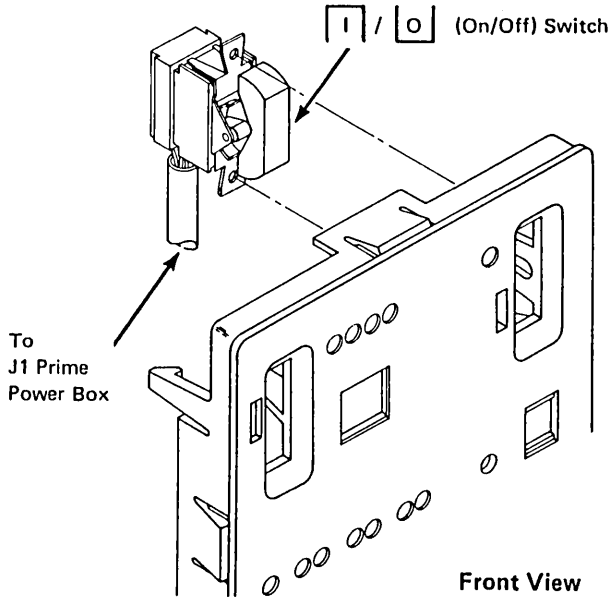

Front View

Figure 4-15. Operator Panel Switches

Chapter 5. Communications Reference Data

5.1 Communications Facilities

5.1.1 3274 Models 51C and 52C SDLC

The 3274 Models 51C and 52C can communicate with the following using synchronous data link control (SDLC):

- S/370 over full or half-duplex communications facilities via a 3704 or 3705 Communications Controller. See Figure 5-1, Part 1.
- 8100 Information System through a directly attached loop or through a data-link attached loop. See Figure 5-1, Part 2.

5.1.2 3274 Model 51C BSC

The Model 51C communicates with an S/370 or S/360 using binary synchronous communications (BSC) over duplex or half-duplex communications facilities via a 2701 Data Adapter Unit, a 2703 Transmission Control Unit, or a 3704 or 3705 Communications Controller. See Figure 5-1, Part 1.

The Model 51C can communicate with the following using BSC:

- S/370 Models 115, 125, 135, or 138 via the appropriate BSC features on the 3115, 3125, 3135, or 3138. See Figure 5-1, Part 1.
- The 4331 through its communication adapter.

5.1.3 3274 Models 51C and 52C Modes/Speeds

The 3274 Models 51C and 52C operate in half-duplex/point-to-point mode or half-duplex/multipoint mode on either half-duplex or duplex facilities. Transmission speeds are 1200, 2000, 2400, 4800, 7200, and 9600 bps on nonswitched facilities.

For loop attachment, Models 51C and 52C operate in half-duplex mode at the following speeds:

- Direct attached loop - 9600 or 38,400 bps
- Data-link attached loop - 2400, 4800, or 9600 bps.

5.1.4 Communication Adapters

5.1.4.1 Communication Common Adapter

The Communication Common Adapter (CCA) is used with a transmission facility of SNA/SDLC or BSC. Clocking must be provided by the modem or the Communication Facility unless the CCA with clocking is installed in the 3274. When the 3274 contains clocking, the line speed is set by the Line Speed switch, located on the operator panel, and can be either 1200 bps or 600 bps. The CCA with clocking is required when a 1200-bps Integrated Modem is installed.

5.1.4.2 High-Performance Communication Adapter

The High-Performance Communication Adapter (HPCA) is used with a transmission facility of SNA/SDLC. HPCA is required when a line speed is used that is greater than 9600 bps (X.21 nonswitched at 48K bps, or DDS adapter at 56K bps), when either the X.21 switched adapter or the loop adapter is installed.

5.2 Communications Attachments

5.2.1 External Modem – EIA/V.35

An external modem, or equivalent device, with its own clocking can be attached to a 3274 Model 51C or 52C (w/o V.35). The 3274 must have the external modem interface (EIA or V.35) and either a CCA or an HPCA installed. The V.35 interface provides support for communication line speeds up to 57.6K bps for SDLC and 9600 bps for BSC on Model 51C. The V.35 Interface Communications Line Flow – Model 51C is shown in Figure 5-2, a foldout at the back of this manual (page FO-1). Switched network backup is available with auto answer/manual call on IBM (EIA) modems. A determination should be made as to the wrap capabilities of the modem being used. The 3274 communication line flow for EIA is shown in Figure 5-3.

5.2.2 Integrated Modem (1200-bps)

The 1200-bps Integrated Modem feature provides for the connection of the 3274 Model 51C to switched and nonswitched telephone lines, and the connection of the 3274 Model 52C to nonswitched telephone lines. The 1200-bps Integrated Modem is compatible with the IBM Mini-12 and 3976-3 modems.

Note: *The operating speed of the IBM 3976-3 is only 1200 bps.*

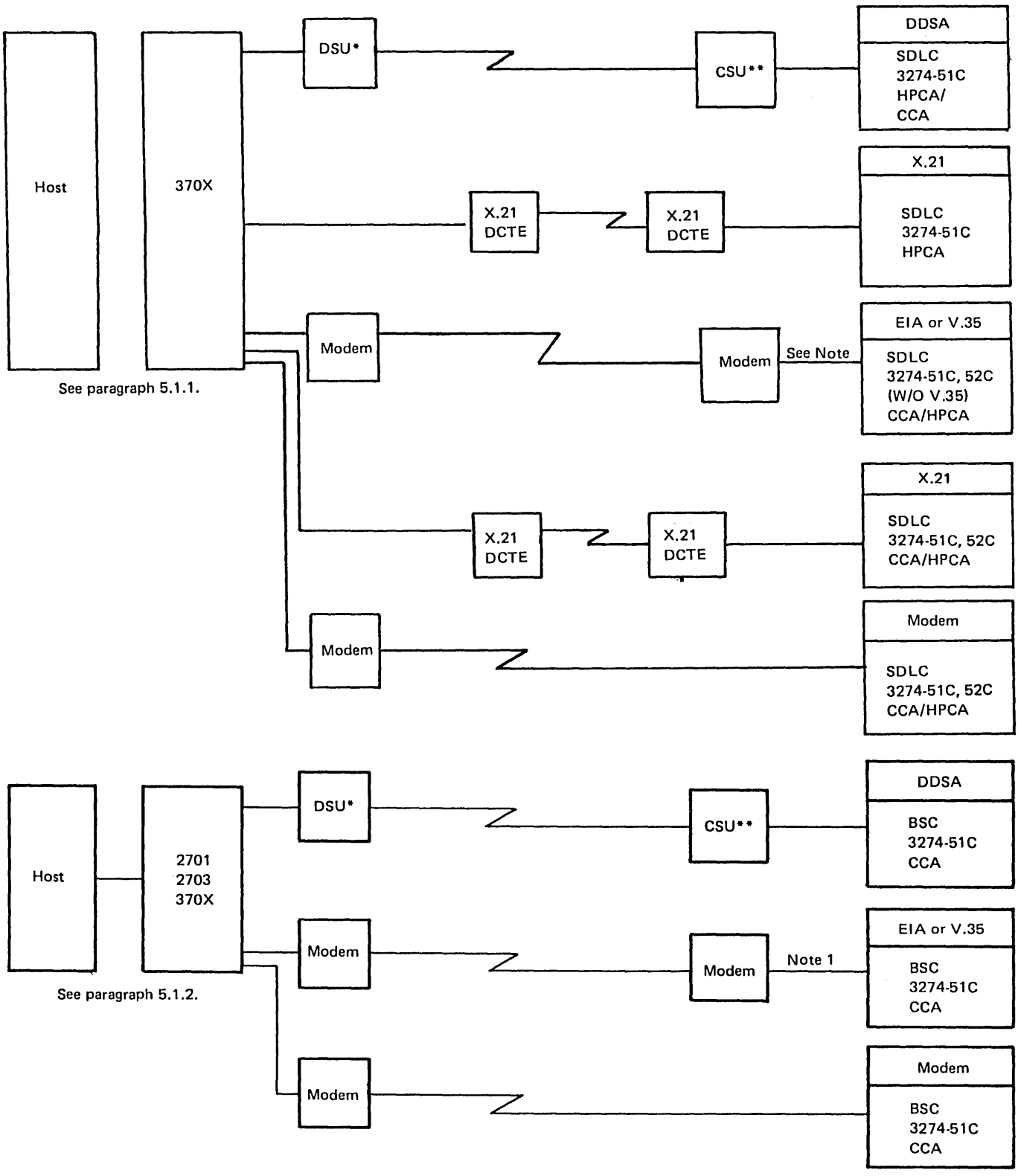

*AT&T Data Service Unit (DSU) or equivalent.
**AT&T Channel Service Unit (CSU) or equivalent.

Note: *Modem may be integrated, in which case EIA or V.35 interfaces are not present.*

Figure 5-1 (Part 1 of 2). Communications Configuration

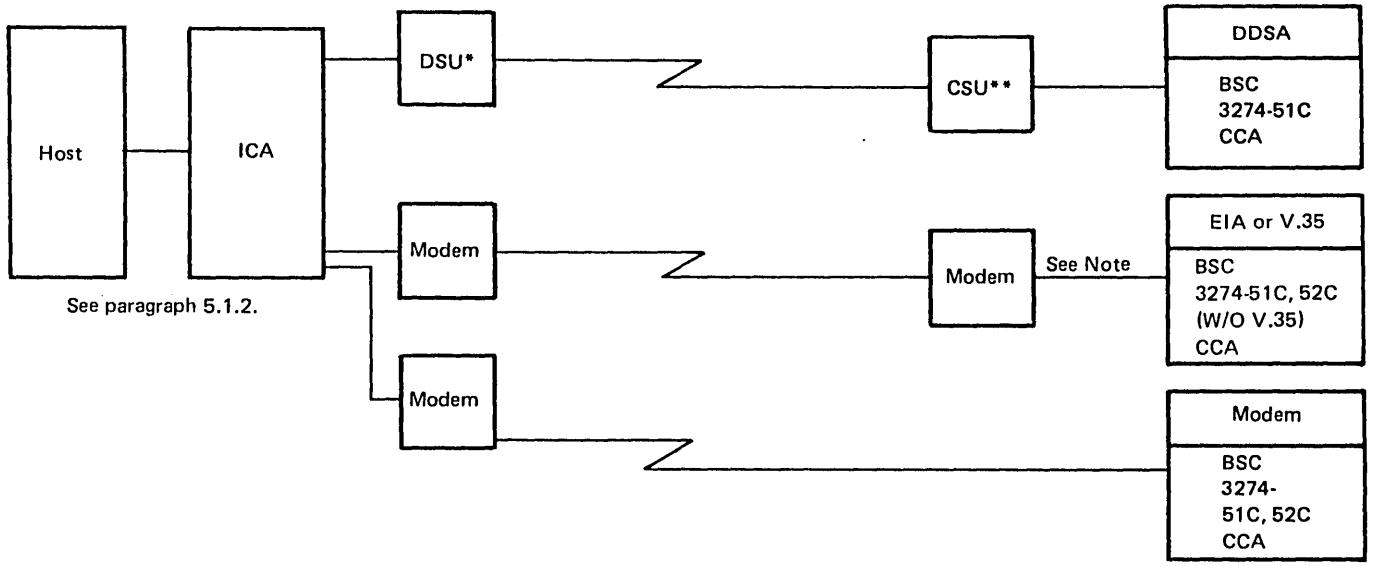

Data Link Attached Loop

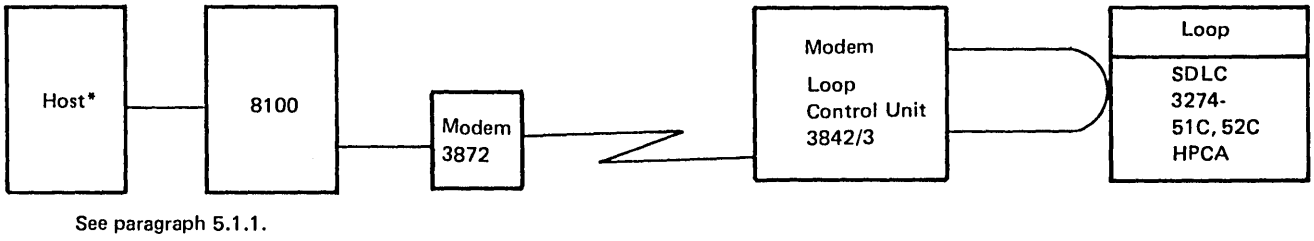

Direct Attached Loop

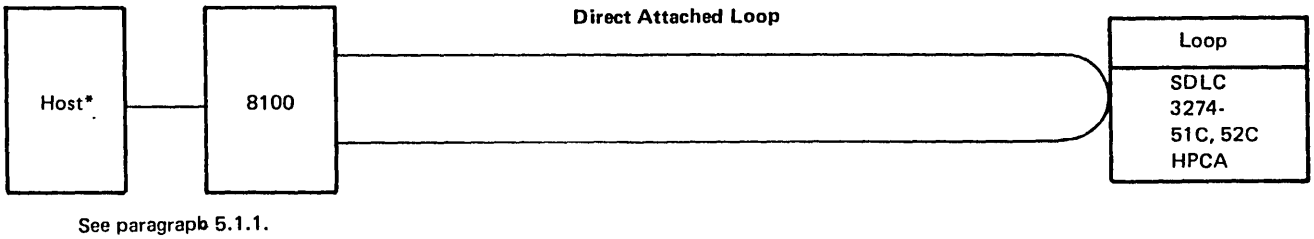

*Host may not be present.

Note: *Modem may be integrated, in which case EIA or V.35 interfaces are not present.*

Figure 5-1 (Part 2 of 2). Communications Configuration

The Integrated Modem allows BSC or SDLC data transmission at a speed of 1200 bps (600-bps backup) on leased lines or SDLC transmission on Public Switched Networks.

The 3274 must have the CCA with clock installed. The Integrated Modems can be used in either two- or four-wire point-to-point or multipoint configurations. Additionally, an SNBU feature allows the modem to attach to the Public Switched Network when its leased line is inoperative.

The 3274 communications line flow for the 1200-bps Integrated Modem, U.S. and Canada, is shown in Figure 5-4, Part 1; the communications line flow, World Trade countries, is shown in Figure 5-4, Part 2.

5.2.3 Integrated Modem (1200 bps) Wrap

The 1200-bps Integrated Modem wrap is similar to the wrap performed in paragraph 5.3.1, with the 3274 customized as a wrappable modem.

5.2.4 Integrated Modems (2400, 4800, and 9600 bps), Model 51C

Refer to paragraph 5.4 for a description of these Integrated Modems.

5.2.5 DDS Adapter

The Digital Data Service (DDS) Adapter connects the 3274 Control Unit Model 51C to the AT&T nonswitched Dataphone* Digital Data Service network. The DDS adapter is an integrated adapter for BSC or SDLC data transmission at speeds of 2400, 4800, 9600, or 56K bps. (If the DDS adapter card (Figure C-12) is jumpered for the incorrect speed, the diagnostic tests will not indicate the failure. NNN codes of 521 or 532 may indicate this problem.) Access to the DDS network is provided by the AT&T Channel Service Unit (CSU), which is the DDS network termination point at the customer site. See Figure 5-1.

The 3274 must have either the CCA or the HPCA installed. The DDS adapter can be used in point-to-point or multipoint configurations. The wrap-test capability of the DDS adapter allows testing of the adapter only, or of the adapter and the communication cable. The 3274 communications line flow for the DDS adapter is shown in Figure 5-5.

5.2.6 Loop

The 3274 Models 51C and 52C can attach to an 8100 or 4331 Information System either locally through a directly attached loop, or remotely through a data-link attached loop using SDLC protocol. The directly attached loop supports a carrier rate of either 9.6 or 38.4 kilobits per second. The data rate of the data link attached loop is 2.4 kilobits per second with half-speed selection of 1.2 kilobits per second. The 3274 Models 51C and 52C can be used with an 8100 System that contains a 8130 or 8140 Processor. The communications line flow for the loop is shown in Figure 5-6.

5.2.7 X.21 Nonswitched

The X.21 nonswitched adapter provides for the connection of 3274 Control Unit Models 51C and 52C to nonswitched Public Data Networks.

Note: *Either the switched or the nonswitched card may be installed.*

The X.21 nonswitched adapter is integrated for SDLC data transmission at speeds of 2400, 4800, 9600, and 48,000 bps. Access to the nonswitched Public Data Networks is provided by the Data Circuit Terminating Equipment (DCTE), which is supplied to the customer by the X.21 Network Authority [in World Trade this is the country's Postal Telephone Telegraph (PTT)]. The DCTE provides clocking to the 3274. See Figure 5-1.

The 3274 must have either the CCA or the HPCA installed. The X.21 adapter can be used in either point-to-point or multipoint configurations. The 3274 communications line flow for the X.21 nonswitched adapter is shown in Figures 5-7 and 5-8.

5.2.8 X.21 Switched

The X.21 switched adapter provides for the connection of the 3274 Control Unit Model 51C to switched Public Data Networks.

The X.21 switched adapter is an integrated adapter for SDLC data transmission at speeds of 2400, 4800, 9600, and 48,000 bps. Access to the switched Public Data Network is provided by the Data Circuit Terminating Equipment (DCTE), which is supplied to the customer by the X.21 Network Authority [in World Trade this is the country's Postal Telephone Telegraph (PTT)]. The DCTE provides clocking to the 3274. See Figure 5-1.

For switched operation the 3274 must have the HPCA installed. The 3274 communications line flow for the X.21 switched adapter is shown in Figure 5-8.

*Trademark of American Telephone and Telegraph Co.

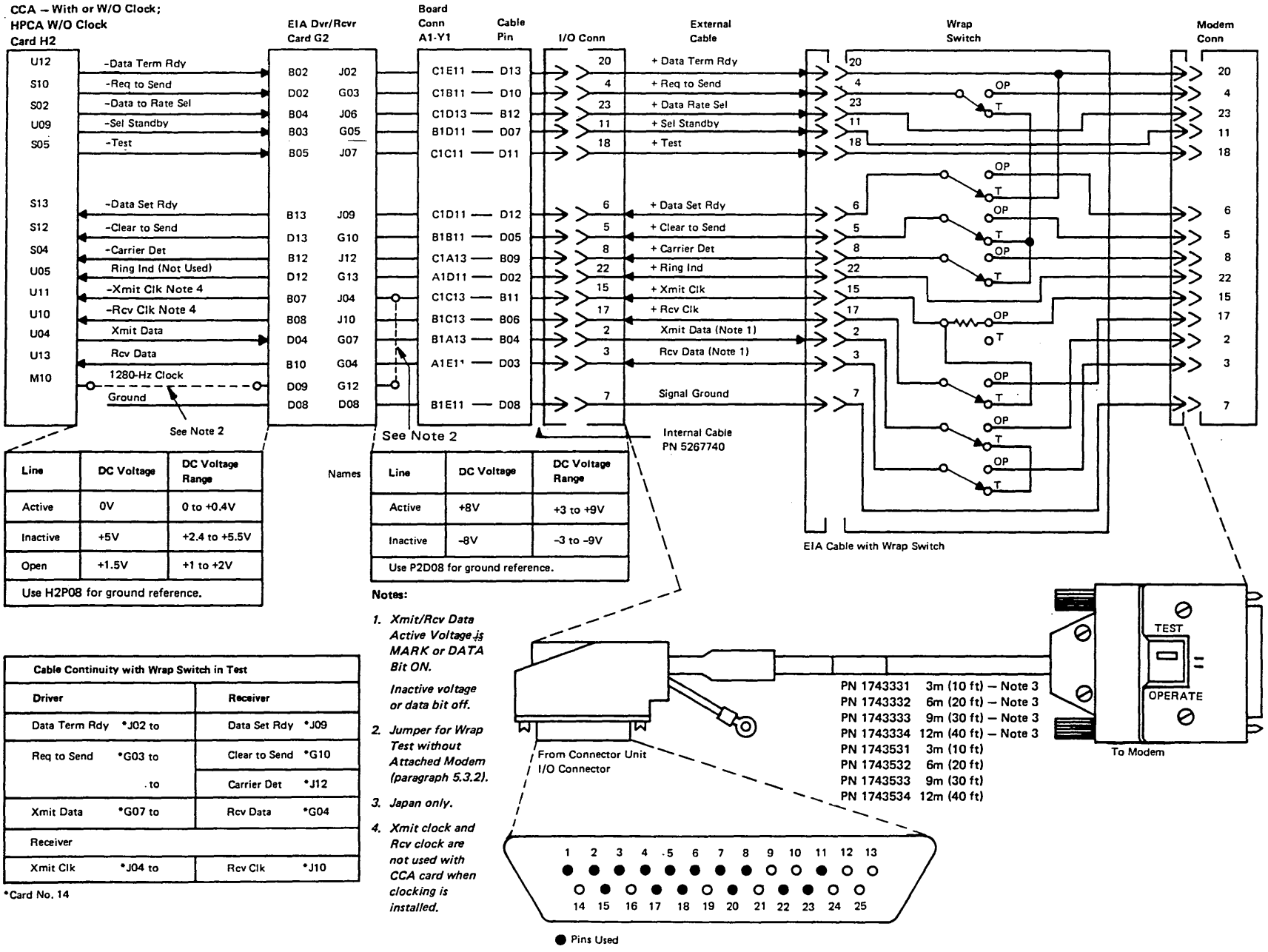

Figure 5-3. Communications Line Flow, EIA

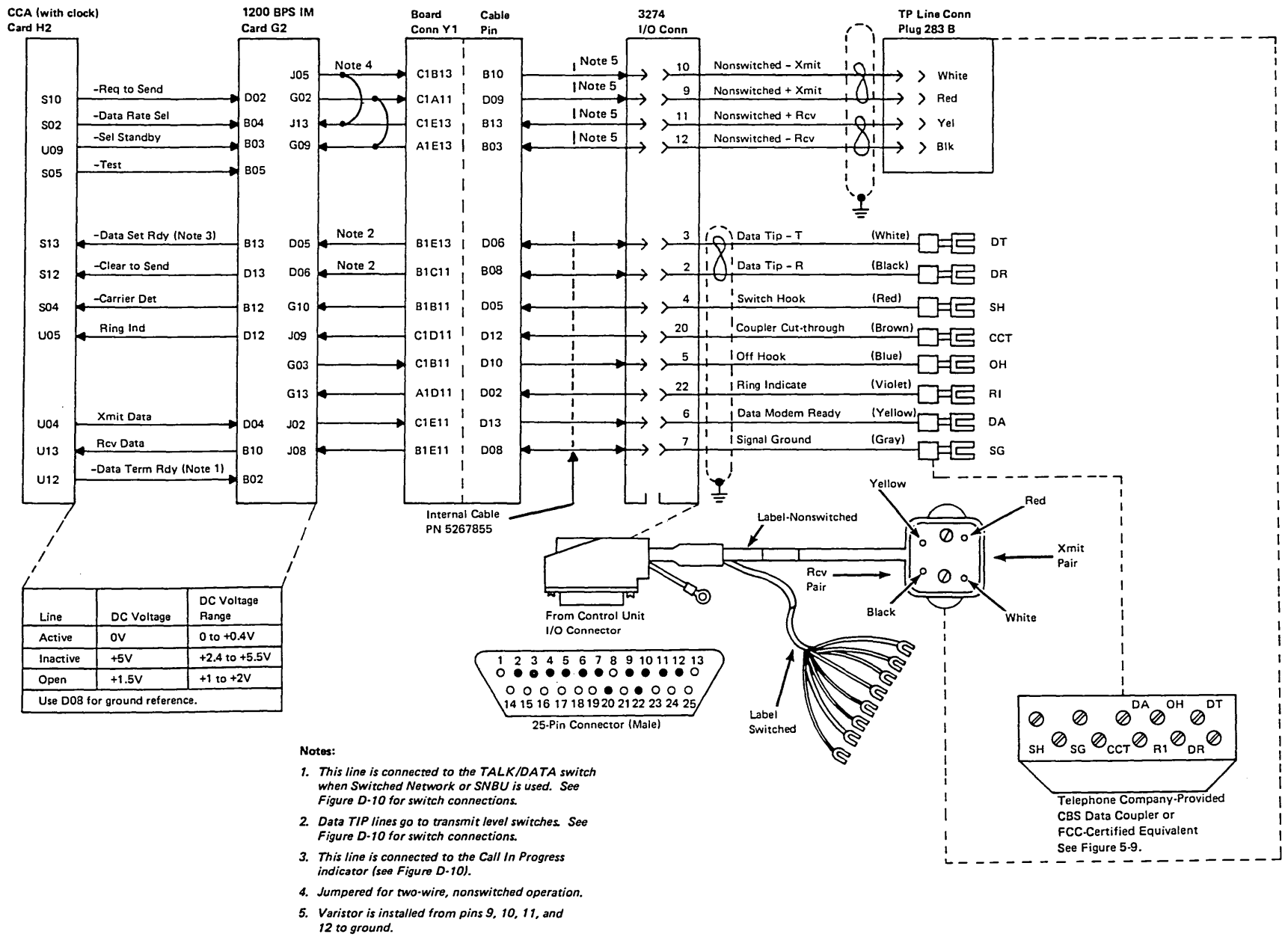

Line	DC Voltage	DC Voltage Range
Active	0V	0 to +0.4V
Inactive	+5V	+2.4 to +5.5V
Open	+1.5V	+1 to +2V
Use D08 for ground reference.		

Notes:

1. *This line is connected to the TALK/DATA switch when Switched Network or SNBU is used. See Figure D-10 for switch connections.*
2. *Data TIP lines go to transmit level switches. See Figure D-10 for switch connections.*
3. *This line is connected to the Call In Progress indicator (see Figure D-10).*
4. *Jumpered for two-wire, nonswitched operation.*
5. *Varistor is installed from pins 9, 10, 11, and 12 to ground.*

Figure 5-4 (Part 1 of 2). 3274 Communications Line Flow, 1200-bps Integrated Modem – U.S. and Canada; World Trade Countries

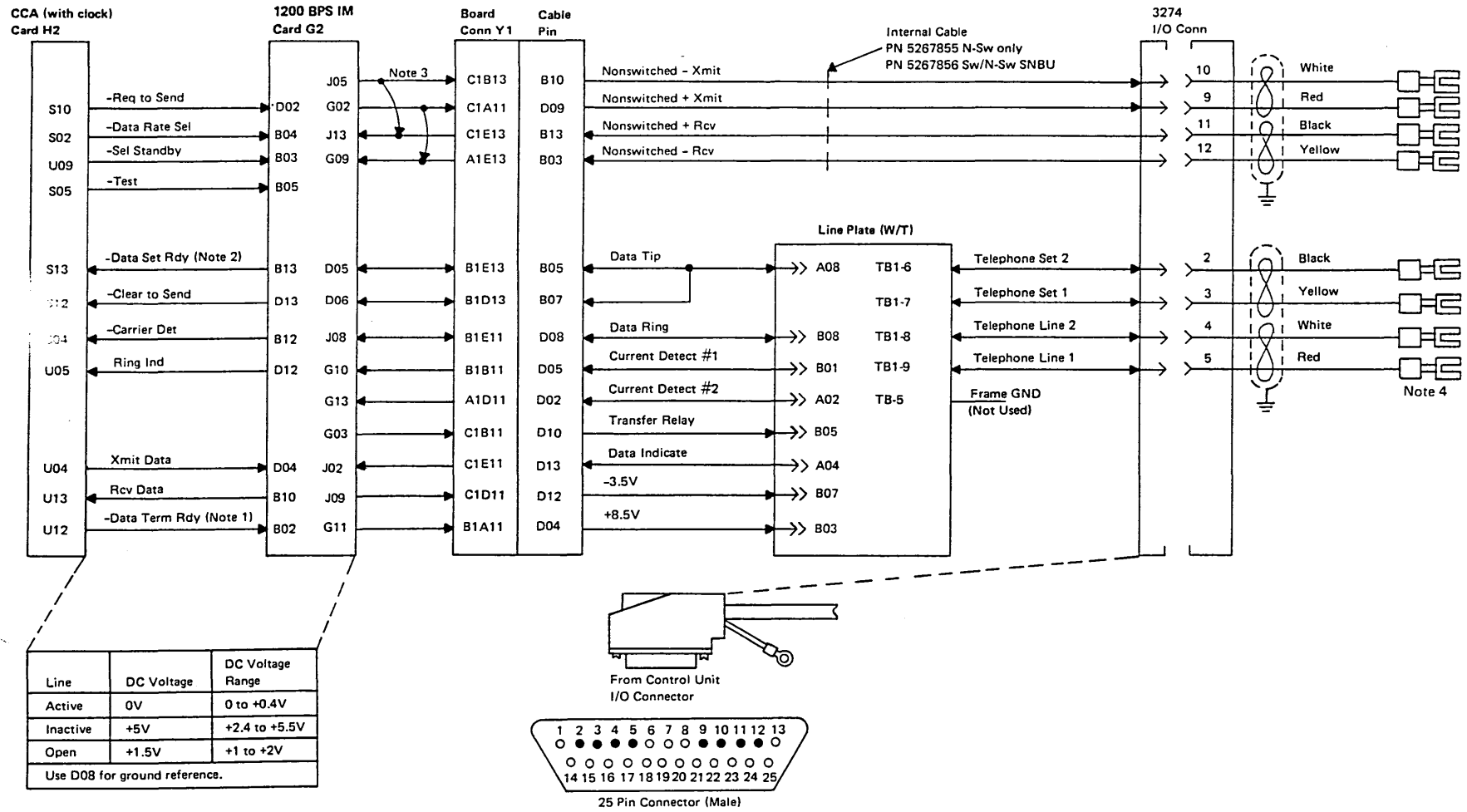

Line	DC Voltage	DC Voltage Range
Active	0V	0 to +0.4V
Inactive	+5V	+2.4 to +5.5V
Open	+1.5V	+1 to +2V
Use D08 for ground reference.		

Notes:

1. *This line is connected to the TALK/DATA switch when Switched Network or SNBU is used. See Figure D-10 for switch connections.*
2. *This line is connected to Call In Progress indicator (see Figure D-10).*
3. *Jumpered for two-wire nonswitched operation.*
4. *For World Trade connectors, see Figure 5-11.*

Figure 5-4 (Part 2 of 2). 3274 Communications Line Flow, 1200-bps Integrated Modem – U.S. and Canada; World Trade Countries

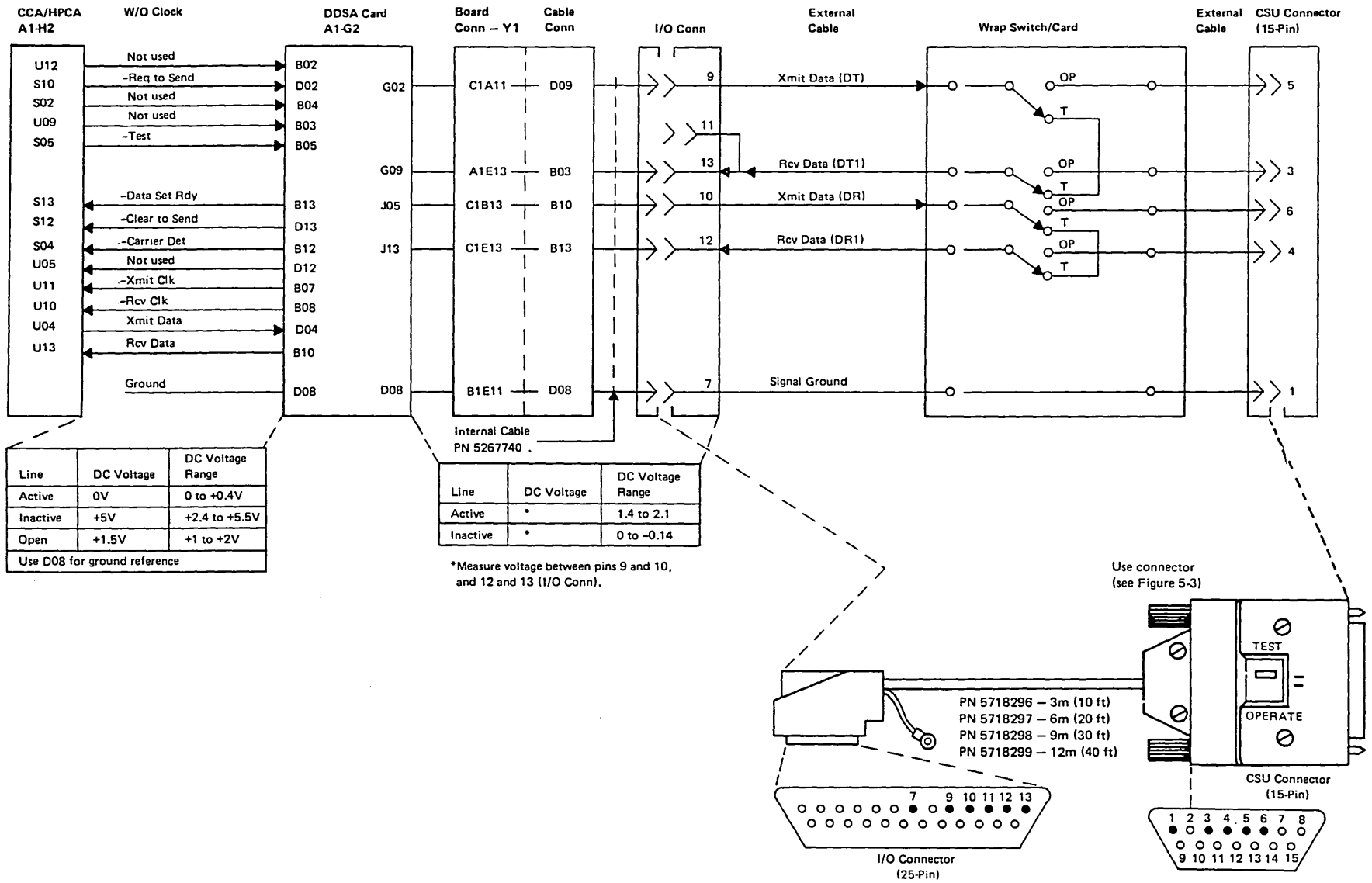

Figure 5-5. Communications Line Flow, DDS Adapter

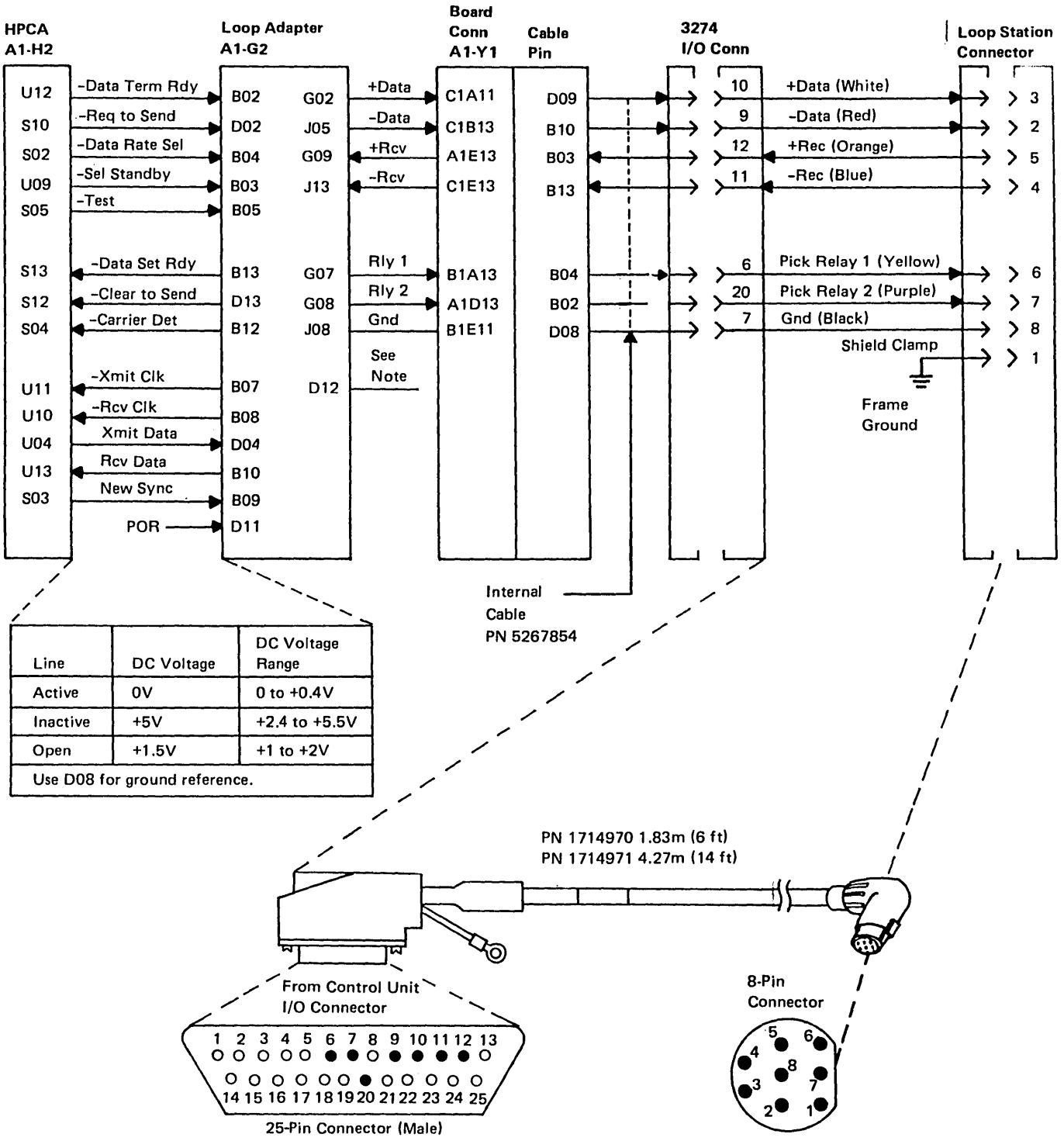

Note: *This pin goes to the Local/Comm switch in the Operator Panel. See Figure D-10, a foldout at the back of the manual (page FO-7).*

Figure 5-6. Communications Line Flow, Loop

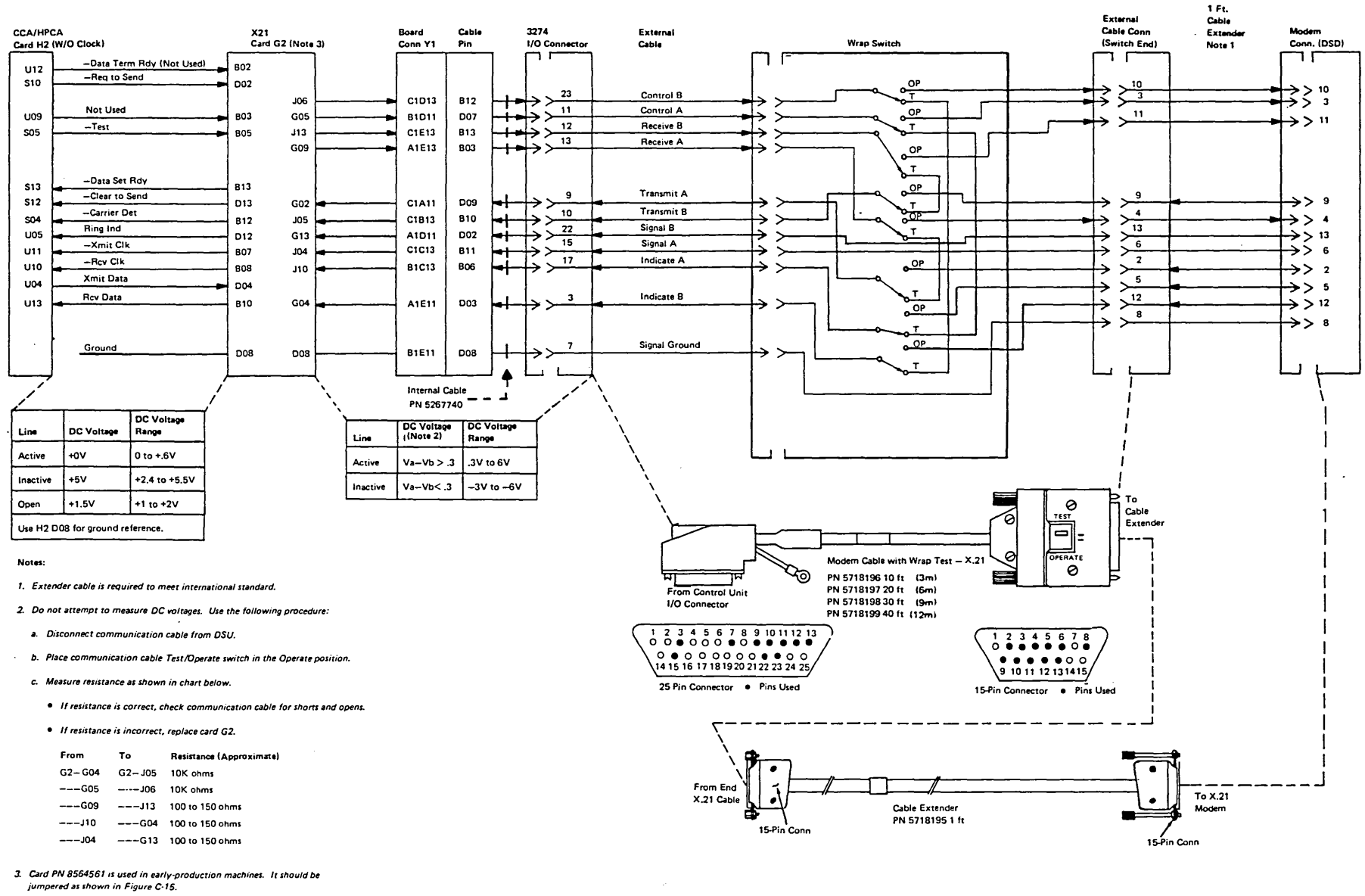

Notes:

1. *Extender cable is required to meet international standard.*
2. *Do not attempt to measure DC voltages. Use the following procedure:*
   a. *Disconnect communication cable from DSU.*
   b. *Place communication cable Test/Operate switch in the Operate position.*
   c. *Measure resistance as shown in chart below.*
      - *If resistance is correct, check communication cable for shorts and opens.*
      - *If resistance is incorrect, replace card G2.*

From	To	Resistance (Approximate)
G2–G04	G2–J05	10K ohms
---G05	----J06	10K ohms
---G09	---J13	100 to 150 ohms
---J10	---G04	100 to 150 ohms
---J04	---G13	100 to 150 ohms

3. *Card PN 8564561 is used in early-production machines. It should be jumpered as shown in Figure C-15.*

Figure 5-7. Communications Line Flow, X.21 Card PN 8564561 Nonswitched (World Trade)

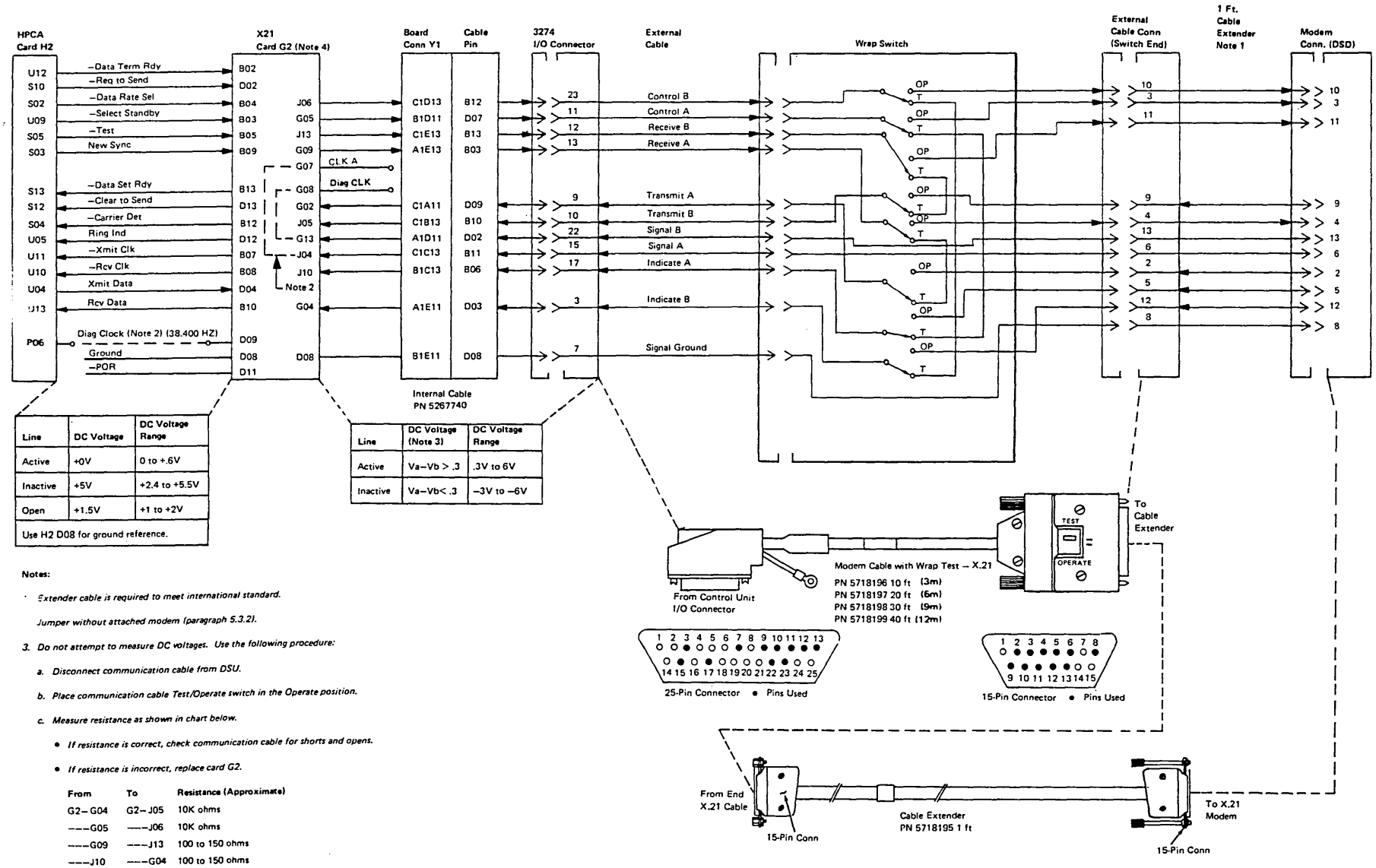

Notes:

1. *Extender cable is required to meet international standard.*

   Jumper without attached modem (paragraph 5.3.2).

3. *Do not attempt to measure DC voltages. Use the following procedure:*

   a. *Disconnect communication cable from DSU.*

   b. *Place communication cable Test/Operate switch in the Operate position.*

   c. *Measure resistance as shown in chart below.*

   - *If resistance is correct, check communication cable for shorts and opens.*
   - *If resistance is incorrect, replace card G2.*

From	To	Resistance (Approximate)
G2–G04	G2–J05	10K ohms
---G05	---J06	10K ohms
---G09	---J13	100 to 150 ohms
---J10	---G04	100 to 150 ohms
---J04	---G13	100 to 150 ohms

4. *Card PN 8564683, or higher-level part number, is used in later-production machines for both switched and nonswitched. The card should be jumpered as shown in Figures C-16 and C-17.*

Figure 5-8. Communications Line Flow, X.21 Switched and Nonswitched–Domestic and World Trade

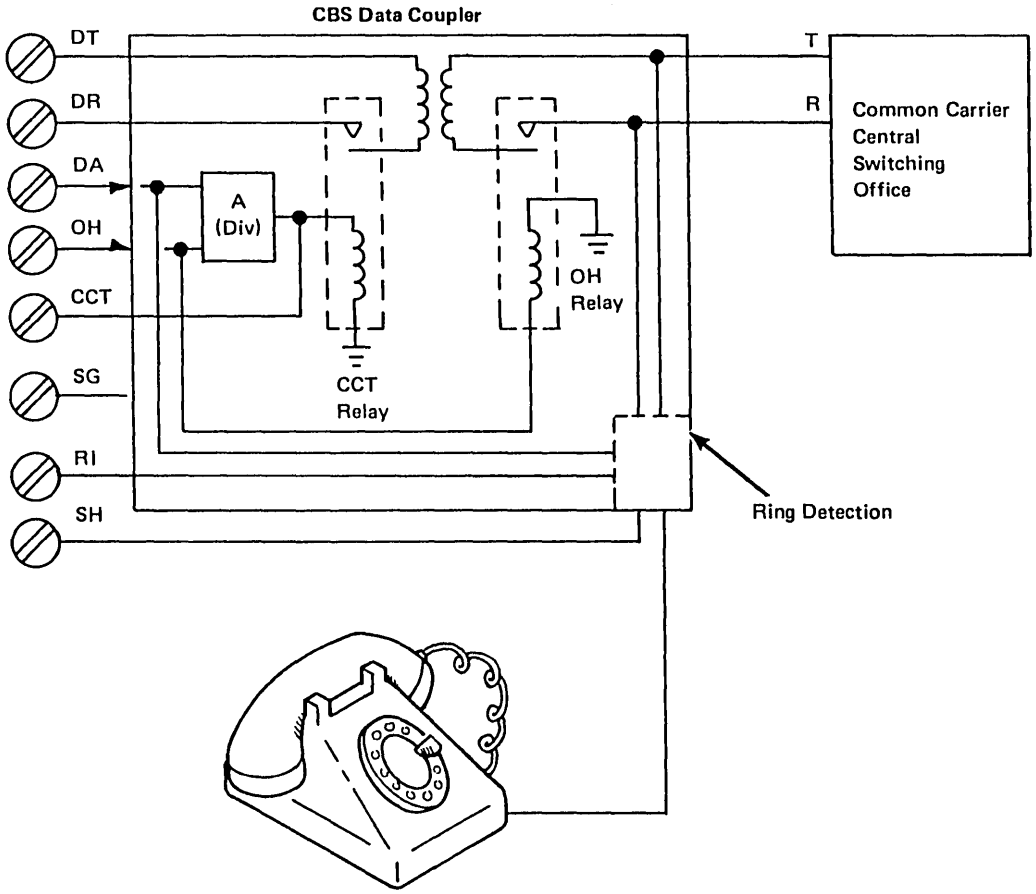

Switched Network Features Equipment

DT = data tip, T = tip
DR = data ring, R = ring
DA = data modem ready
OH = off hook
CCT = coupler cut-through (data coupler ready)
RI = ring indicate
SW = switch hook

Figure 5-9. CBS Data Coupler – U.S. and Canada

5.3 Wrap Test

5.3.1 Modem Wrap Test

- EIA
- V.35
- DDS Adapter
- 1200-bps Integrated Modem
- X.21

The modem wrap test can be initiated by one of two IML functions (normal IML, ALT2 IML). For the wrappable modem, the normal IML and the ALT2 IML can initiate the wrap test. For the nonwrappable modem, the ALT2 IML is used. A modem is considered wrappable if its circuitry allows it to be wrapped from the DTE.

5.3.1.1 Normal IML (wrappable modem)
If the modem is wrappable, the customer should configure the system diskette as "wrappable modem installed." After configuration, each time a normal IML is performed, a modem wrap will be attempted by the IML tests. (For the DDS adapter, only the adapter and the communication cables are tested.) If the wrap test fails, the 8 4 2 1 indicators will display a flashing 0111 code. Additional information may also be displayed in the 8 4 2 1 indicators and/or at the display attached to location A0, depending on the level of the diskette code. When the 3274 does display an additional code, the 0111 code will blink for 5 seconds alternately with the other code which will be displayed continuously for 3 seconds.

The description in this chapter deals only with the codes indicated at the display. Use the chart below to convert to 3274 codes.

Codes at Display A0	Codes at 8 4 2 1 Indicators
0111 – 013	0111 – 1101
0111 – 021 or 002	0111 – 0010
0111 – 016 or 001	0111 – 0001
0110 – 005	0110 – 0101
0110 – 009	0110 – 1001

An indication of 013, 021 (X.21 Switched) means "general modem wrap failure." An indication of 016 means "modem failed to set clear to send." The EIA cable Test/Operate switch should be left in the Operate position if the modem is wrappable. If, during a normal IML, a failure indication of 0110 005 or 0110 009 appears on the display, the adapter has failed. If the wrap test failed, see Note in paragraph 5.3.1.2.

5.3.1.2 ALT2 IML (wrappable/nonwrappable modem)
Pressing the IML pushbutton while holding the ALT switch in position 2 will initiate the wrap test for wrappable and nonwrappable modems. (For the DDS, X.21, EIA and V.35 with nonwrappable modems, and Loop adapters, only the adapter and the communication cable are tested.) The cable Test/Operate switch* should be set to Test. The cable should also be left plugged into the modem (clocking is supplied by the modem). If the wrap test fails, the only indication will be a flashing 0111 on the operator panel operational indicators. The modem wrap test takes approximately 1 minute to complete.

If the modem wrap test is successful, a test is initiated to check for Carrier Detect by setting the Test/Operate switch* to Operate (does not apply to X.21 Switched or loop).

If Carrier Detect is not present, the operational indicators (8 4 2 1) will display 1000. This indication will remain until Carrier Detect is detected, at which time the lights will change to 1111.

Note: *If the wrap test fails:*

a. If 1200-bps Integrated Modem, check card G2 switches for proper settings (see Figures C-1 through C-6).

b. Check that the modem power and communication cable connectors are secure and that the modem is in the normal operating mode.

c. Change cards A1G2, H2.

d. Check that the modem feature options in the modem are activated for DTE control modem wrap function.

e. Check the internal I/O cable in board position Y1, and the external I/O communication cable for defects. See line flow Figures 5-3 through 5-5.

f. Check voltages using MAP A120, entry point F.

g. See the procedure for running the wrap test without the attached modem (paragraph 5.3.2).

5.3.2 Wrap Test without Attached Modem (X.21 and EIA or V.35 without Clock)

This procedure can be used to further isolate the problem to the CCA/HPCA or to the modem when the modem wrap test has failed. In this procedure the modem is not attached and the internal clock signal in the CCA/HPCA is used in place of the modem clock signal. A successful wrap test indicates that the problem is associated with the modem, and a failing wrap test indicates that the problem is associated with the CCA/HPCA.

1. Turn off the 3274.
2. Set communication cable Test/Operate switch to Test.
3. Disconnect the communication cable from the modem.
4. Place jumpers on the 01A-A1 board as follows:

EIA	*X.21***
H2M10 to G2D09	G2G07 to G2J04
G2G12 to G2J04	H2P06 to G2D09
	G2G08 to G2G13

V.35
H2M10 to G2D09
G2F07 to G2J04
G2G13 to G2G08

Move card G2 jumper from F to E. See Figure C-17.

*Loop and 1200-bps Integrated Modem does not have communication cable with a Test/Operate switch.
**Card PN 5864683 or future part number.

5. Turn on the 3274.
6. Run the wrap test by performing an ALT2 IML. Successful completion of the wrap test is indicated by the operational indicator (8 4 2 1) display of 1000.

Warning: Remove the jumpers that were placed on the 01A-A1 board before reconnecting the communication cable to the modem. For V.35, restore card G2 jumper from E to F. See Figure C-17.

5.3.3 Loop Wrap Test

The loop wrap test can be initiated by a normal IML or an ALT2 IML as follows:

Normal IML - With the diskette customized for loop, a loop wrap test will be initiated each time a normal IML is performed. If the wrap test fails, a blinking 8 4 2 1 code of 0111 will be indicated. The attached display on port 0, or at the 3274, will display one of the following:

0111 013 - Indicates a failure from the HPCA to the loop adapter.

0111 014 - Indicates that the Loop Station Connector (LSC) wrap test has failed.

Use the chart below to convert display codes to 8 4 2 1 indicator codes.

Codes at Display A0	Codes in 8 4 2 1 Indicators
0111 -- 013	0111 -- 1101
0111 -- 014	0111 -- 1110
0111 -- 021 or 002	0111 -- 0010
0111 -- 016 or 001	0111 -- 0001
0110 -- 005	0110 -- 0101
0110 -- 009	0110 -- 1001

ALT2 IML - The loop wrap test is initiated by holding the ALT2 switch in the 2 position and momentarily pressing the IML pushbutton.

The following action should be taken if the wrap test fails:

1. If the 8 4 2 1 code is "013", change cards 13 and 14.
2. If the 8 4 2 1 code is "014":
   a. Change card 14.
   b. Check the internal I/O cable in board socket Y1 and the external I/O communication cable for defects. See Figure 5-6.

5.3.4 Loop Indicators

- Machine Check Indicator - Indicates that a problem is internal to the 3274. When this indicator is on, run the Loop Wrap Test (see paragraph 5.3.3).
- $\overline{\text{OK}}$ (Line Ready) - Indicates that a valid message was received within the last 8 seconds. If this indicator does not come on, use the Host/8100 maintenance procedures to isolate the problem.
- External Check Indicator - Indicates that errors are external to the 3274. If this indicator is on, use the Host/8100 maintenance procedures to isolate the problem.

The loop indicators described above are shown in Figure D-2.

5.4 2400-, 4800-, and 9600-bps Integrated Modems

The 2400-, 4800-, and 9600-bps Integrated Modems connect the 3274 Model 51C to nonswitched telephone lines. These modems operate in either BSC or SDLC; the 3274 Model 51C must be equipped with CCA or HPCA. Figure 5-10 shows the communication line flow.

5.4.1 2400-bps Integrated Modem (Feature Code 5640)

- Microprocessor based
- Half speed of 1200 bps
- Operates in duplex mode over a nonswitched four-wire communication channel in either point-to-point or multipoint attachment.
- Central site must provide an IBM 3863 Model 1 modem.

5.4.2 4800-bps Integrated Modem (Feature Code 5740)

- Microprocessor based
- Half speed of 2400 bps
- Operates in duplex mode over a nonswitched four-wire communication channel in either point-to-point or multipoint attachment.
- Central site must provide an IBM 3864 Model 1 modem.

5.4.3 9600-bps Integrated Modem (Feature Codes 5840 and 5842)

- Microprocessor based
- Half speed of 4800 bps
- Point-to-point (Feature Code 5840)

  This attachment operates in duplex mode over a nonswitched four-wire communication channel. The central site must provide an IBM 3865 Model 1 modem.
- Multipoint (Feature Code 5842)

  This attachment operates in duplex mode over a nonswitched four-wire communication channel. The central site must provide an IBM 3865 Model 2 modem.

5.4.4 Line Attachments

5.4.4.1 Multipoint Network Operating Speed

In a multipoint nonswitched network, the operator, at the master modem or through host programming, can cause the 3274 Integrated Modem to adjust its operating speed to half speed. A reduction to half speed cannot, however, be done by the 3274.

5.4.4.2 Point-to-Point Network Operating Speed

In a point-to-point nonswitched network, the operating speed is controlled by the speed switch at the master modem.

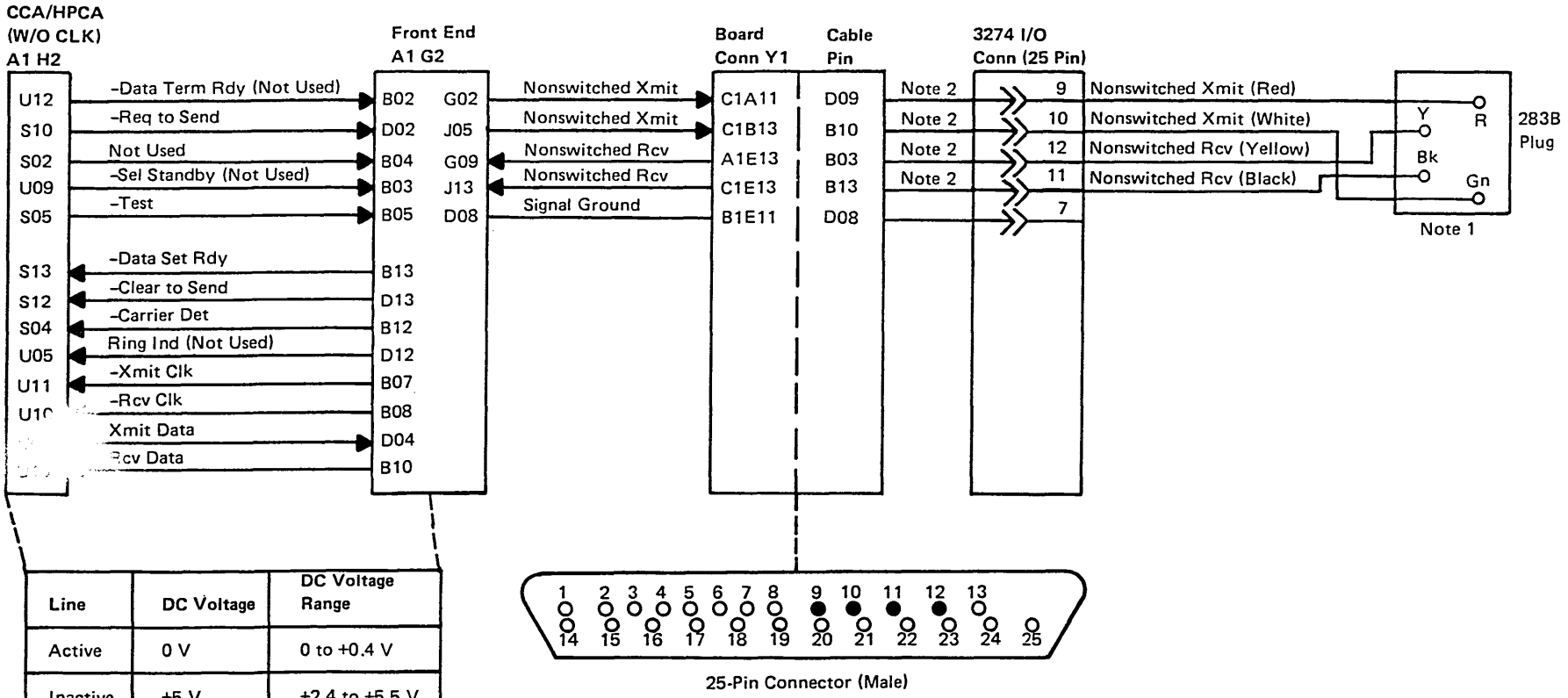

Line	DC Voltage	DC Voltage Range
Active	0 V	0 to +0.4 V
Inactive	+5 V	+2.4 to +5.5 V
Open	+1.5 V	+1 to +2 V
Use D08 for ground reference.		

Notes:

1. *Plug shown is for U.S. and Canada. For World Trade countries, can be spade lugs or World Trade plug. Refer to Figure 5-11, Parts 1 and 2.*
2. *Varistor is installed from pins 9, 10, 11, and 12 to ground.*

Figure 5-10. Communications Line Flow, 2400-bps, 4800-bps, and 9600-bps Nonswitched Integrated Modems (Model 51C) for U.S., Canada, and World Trade Countries

U.S. and Canada

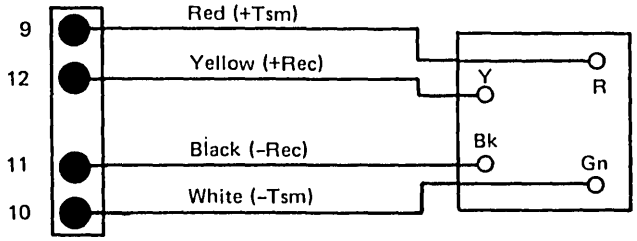

283B Plug

PN 1714951 3m (10 ft)
PN 1714952 6m (20 ft)
PN 1714953 9m (30 ft)
PN 1714954 12m (40 ft)

See Note 1.

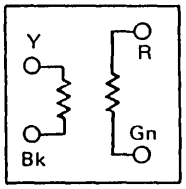

600 Ω Termination Plug
PN 5151251

Austria

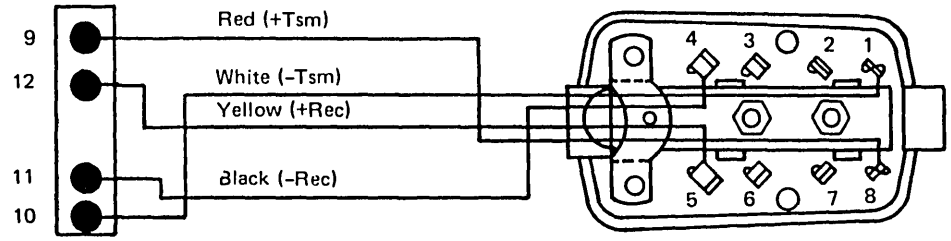

See Notes 1 and 2.

PN 2767158

Belgium/Germany

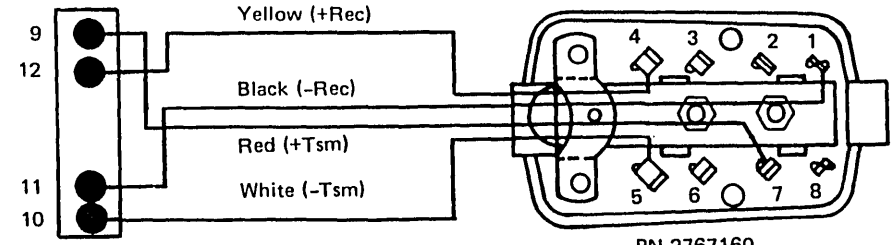

See Notes 1 and 2.

PN 2767160

Finland

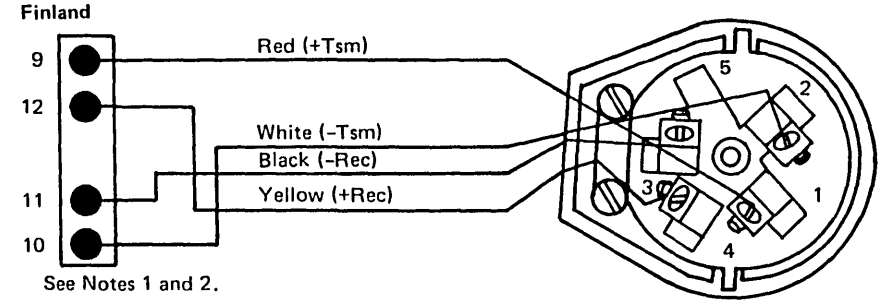

See Notes 1 and 2.

PN 2767161

France

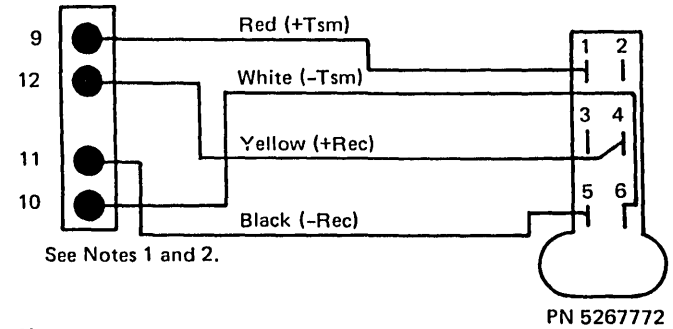

See Notes 1 and 2.

PN 5267772

Notes:

1. *25-Pin I/O Connector (Male)*
2. *Actual connection is through a U.S. and Canada long cable/plug 283B and this short cable.*

Figure 5-11 (Part 1 of 2). Communication Cable Plugs (4-Wire, Nonswitched) for U.S., Canada, and World Trade Countries

Israel

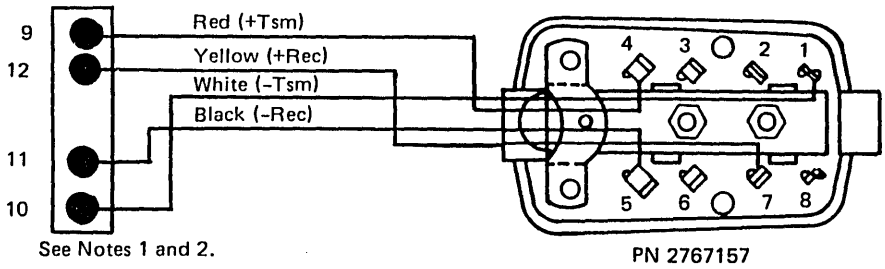

See Notes 1 and 2.

PN 2767157

Netherlands

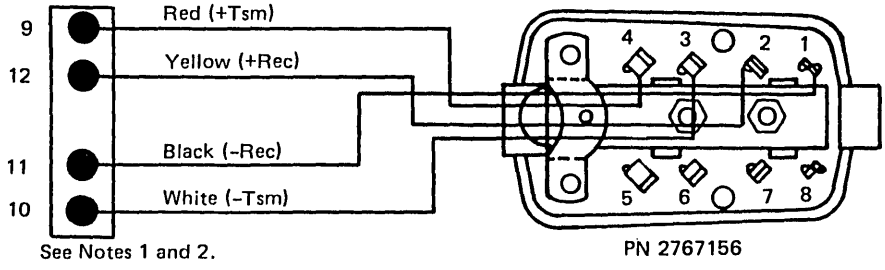

See Notes 1 and 2.

PN 2767156

Switzerland

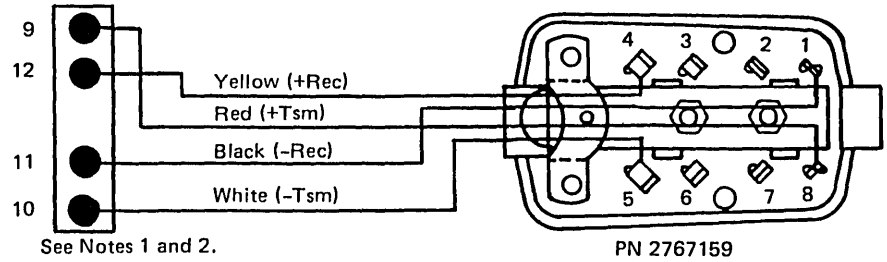

See Notes 1 and 2.

PN 2767159

Japan

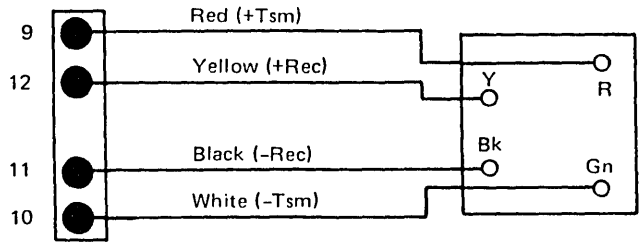

See Notes 1 and 2.

NTT Quick Disconnect
PN 5162880 –
Connection to NTT facilities by NTT representative

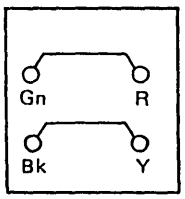

NTT Shorting Plug
P N 1864272

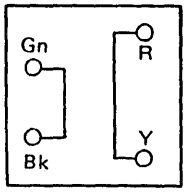

NTT Wrap Plug
P N 1864271

All Other Countries

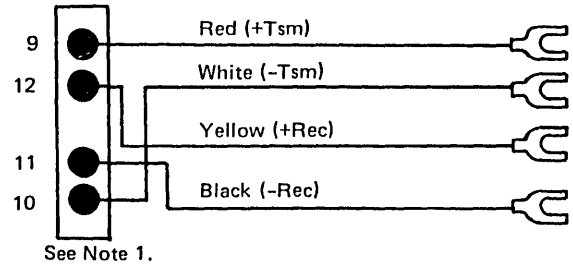

See Note 1.

PN 1714988 3m (10 ft)
PN 1714989 6m (20 ft)
PN 1714990 9m (30 ft)
PN 1714991 12m (40 ft)

Notes:

1. *25-Pin I/O Connector (Male)*
2. *Actual connection is through a U.S. and Canada long cable/plug 283B and this short cable.*

Figure 5-11. (Part 2 of 2). Communication Cable Plugs (4-Wire, Nonswitched) for U.S., Canada, and World Trade Countries

5.4.4.3 Signal Quality
The Data Quality indicators (Good and Poor), located on the operator panel of the 3274 Model 51C, reflect the quality of the line signal during line tests and during data transmission, and when data is not being received.

When the Good indicator is "on", signal quality is good. The Good and Poor indicators, in combination, give an indication of the number of line hits occurring during a particular monitoring period of 256 baud as follows:

Signal Quality	Good	Poor	Hits
Good	On	Off	0
Marginal	Flashing	Off	1
Poor	Off	On	2 or more
No Signal	Off	Off	

Note: *Both data quality indicators may be on at the same time; this is a temporary state lasting less than 1 second.*

5.4.4.4 Speed Control Backup
When poor lines cause data quality problems at full (normal) data speed, the integrated modem can be operated at half speed.

Note: *A reduction to half speed can be done only at the master modem.*

Degraded line quality is indicated by the Data Quality – Poor indicator turning on frequently, or by messages from the host DTE indicating data errors.

5.4.4.5 Operate Indicator
The Operate indicator will turn off if the Integrated Modem detects a malfunction in the processor card. When this occurs, the processor causes a modem power-on reset in the Integrated Modem, which then initiates the self-test. The self-test will repeat every 4 seconds until the malfunction is corrected.

5.4.5 2400-, 4800-, and 9600-bps Integrated Modem Diagnostics

A self-test program, resident in the Integrated Modem, runs whenever the 3274 is powered on. The self-test will also run when the ALT IML Address switch is held in the ALT2 position. After a power-on, self-contained Integrated Modem diagnostics start running in conjunction with the IML diagnostics. In addition, an Integrated Modem wrap test is run as part of the IML diagnostics. The wrap test (0111) can also be initiated by momentarily pressing the IML pushbutton while holding the ALT IML Address switch in position 2.

5.4.5.1 Self-Test/Wrap Test
When either a self-test or a wrap test locates a failure, a flashing 0111 code will appear in the 8 4 2 1 indicators of the 3274 operator panel. After power-on, the self-test, if successful, will stop. If an error occurs, the self-test will repeat every 4 seconds. The wrap test, if successful, will cause the IML tests to continue. If the wrap test fails, the 8 4 2 1 indicators will display a flashing 0111 code. Additional information may also be displayed in the 8 4 2 1 indicators and/or at the display attached to location A0, depending on the level of the diskette code. When the 3274 does display an additional code, the 0111 code will blink for 5 seconds alternately with the other code which will be displayed continuously for 3 seconds.

The description in this chapter deals only with the codes indicated at the display. Use the chart below to convert to 3274 codes.

Codes at Display A0	Codes in 8 4 2 1 Indicators
0111 – 013	0111 – 1101
0111 – 021 or 002	0111 – 0010
0111 – 016 or 001	0111 – 0001
0110 – 005	0110 – 0101
0110 – 009	0110 – 1001

The self-test checks the Integrated Modem cards; the wrap test checks the CCA/HPCA adapter up to the front end card A1G2.

5.4.5.2 Integrated Modem Failure
If either the wrap test (0111) or the self-test fails, the IML tests will stop with a 0111 code appearing in the 8 4 2 1 indicators. After about 30 seconds the 0111 code will start flashing. Further, when the self-test fails, the LEDs located on the A1D2 card will indicate the failing logic card. The category A device attached to Port 0 or the 8 4 2 1 indicators, if the diskette code is supported, will display one of the following:

0111 013 - Indicating a modem wrap test failure.

0111 016 - Indicating a self-test, Clear to Send, or a Data Set Ready failure.

A summary of the self-test and wrap-test failures and probable failing cards is given for the 2400-, 4800-, and 9600-bps Integrated Modems in Figure 5-12, 5-13, and 5-14, respectively.

Note: *If IML test 0111 is flashing, perform procedure 5.4.5.6.*

5.4.5.2.1 Operator Panel Lamp Test
To verify that all operator panel indicators will light, perform the following:

Note: *The remainder of the 3274 must operate correctly.*

1. Switch power on. The Good and Poor indicators should light momentarily.
2. While the IML tests are running, note whether the Operate, Test, and Good indicators light.

To isolate a faulty indicator, operator panel card, cable, etc., use FO-9 (Jackplug 3).

Note: *A jumper from signal indicator to ground can be used to light the indicator for fault isolation.*

5.4.5.3 ALT2 Self-Test
Holding the ALT IML Address switch in position 2 will cause the self-test to cycle every 4 seconds. If there are no failures, the LEDs located on card A1D2 and the Data Quality – Good indicator will flash each time the self-test runs. If the self-test fails, however, the LEDs located on the A1D2 card will indicate the failing card. Releasing the ALT IML Address switch should return the modem to the Operate mode regardless of success or failure.

Test Function Failure	Display Code**	Processor Card D2 LEDs. Note 2			Operator Panel LED	Failing Card Note 1	Notes
		Feat.	Front End	Proc	Poor		
No Failure	–	☼	☼	☼	O	–	Card LEDs flash once during each self-test.
Processor	0111 016	O	O	O	● *	D2, G2, B4	Self-test failed to start.
Processor	0111 016	☼	☼	☼	● *	D2, G2, B4	Self-test failed to end.
Processor	0111 016	●	●	●	● *	D2, G2, B4	Self-test failed to end.
TAC	0111 016	●	O	O	●	C2, G2, D2	Self-test stops on error.
Front End	0111 016	O	●	O	●	G2, D2	Self-test stops on error.
Processor	0111 016	O	O	●	●	D2, G2, B4	Self-test stops on error.
Modem Wrap	0111 013	–	–	–	–	H2, G2	Modem to adapter stops on error.

Legend

O = Off

☼ = Flashing

● = Continuously lighted

– = Not used

*Not always on or flashing.
**See table in section 5.4.5.1.

Notes:

1. *Replace in order of probability.*
2. *If two or more card LEDs are on, replace cards for all symptoms.*
3. *Indicator results shown with ALT2 switch held depressed.*

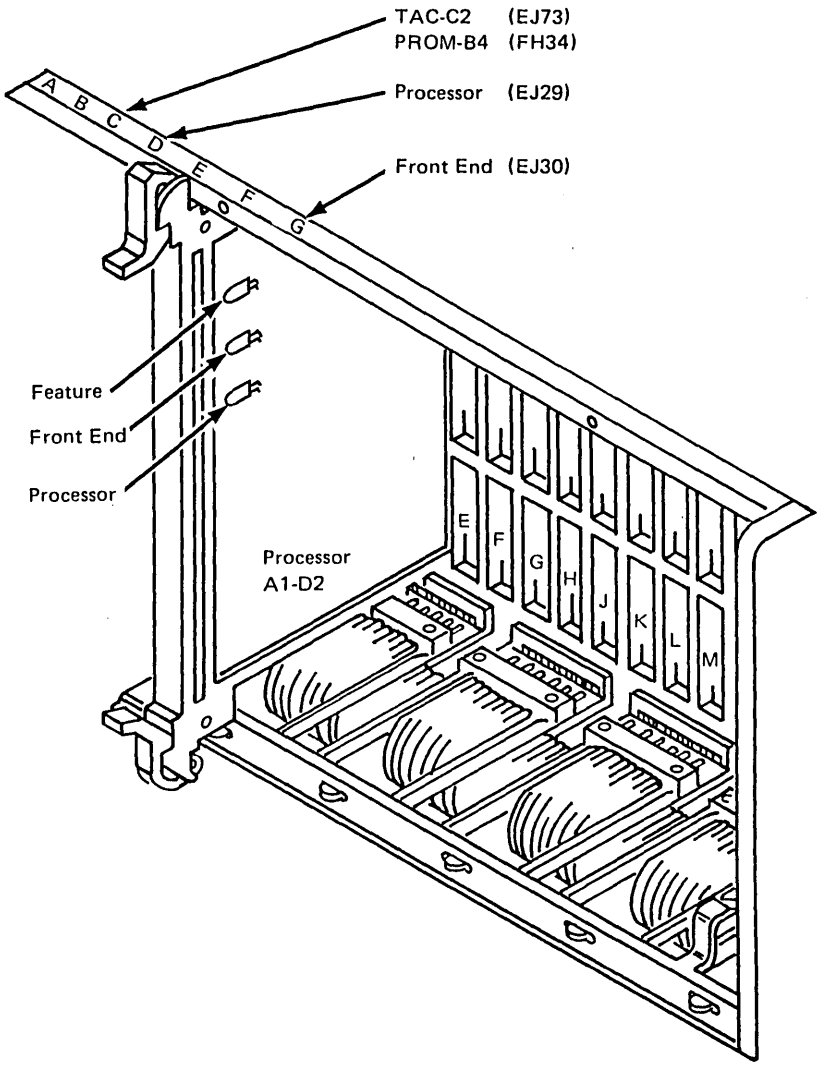

Figure 5-12. 2400-bps Integrated Modem Card LED [illegible] and Test Results

Test Function Failure	Display Code**	Processor Card D2 LEDs. Note 2.				Operator Panel LED	Failing Card Note 1	Notes
		Feat.	Rec	Front End	Proc	Poor		
No Failure	–	☼	☼	☼	☼	O	–	Card LEDs flash once during each self-test.
Processor	0111 016	O	O	O	O	● *	D2, G2, B4	Self-test failed to start.
Processor	0111 016	☼	☼	☼	☼	● *	D2, G2, F2, B4	Self-test failed to end.
Processor	0111 016	●	●	●	●	● *	D2, F2, G2, B4	Self-test failed to end.
TAC	0111 016	●	O	O	O	●	C2, G2, D2	Self-test stops on error.
Receiver	0111 016	O	●	O	O	●	F2, D2, G2	Self-test stops on error.
Front End	0111 016	O	O	●	O	●	G2, F2, D2	Self-test stops on error.
Processor	0111 016	O	O	O	●	●	D2, F2, G2, B4	Self-test stops on error.
Modem Wrap	0111 013	–	–	–	–	–	H2, G2	Modem to adapter stops on error.

Legend

O = Off

☼ = Flashing

● = Continuously lighted

– = Not used

*Not always on or flashing.
**See table in section 5.4.5.1.

Notes:

1. *Replace in order of probability.*
2. *If two or more card LEDs are on, replace cards for all symptoms.*
3. *Indicator results shown with ALT2 switch held depressed.*

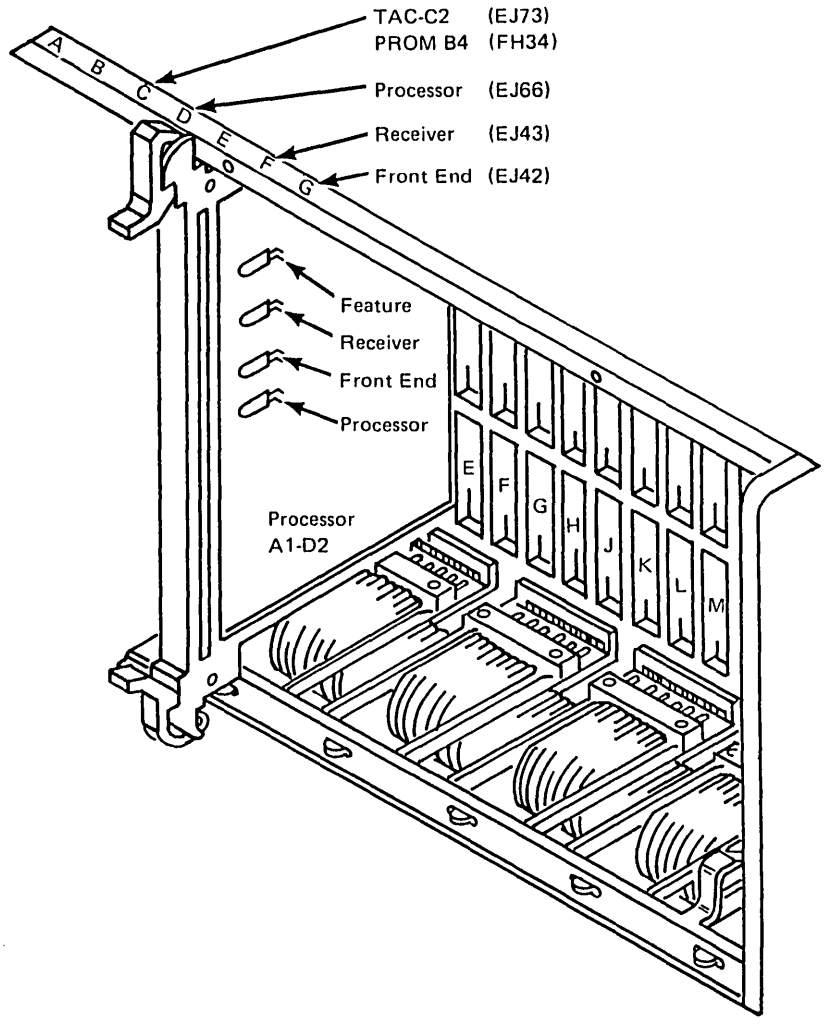

Figure 5-13. 4800-bps Integrated Modem Card LED Locations and Test Results

Test Function Failure	Display Code**	Receiver Ext Card D2 LEDs. Note 2.				Operator Panel LED	Failing Card Note 1	Notes
		Rec Ext	Rec	Front End	Proc	Poor		
No Failure	–	☼	☼	☼	☼	○	–	Card LEDs flash once during each self-test.
Processor	0111 016	○	○	○	○	● *	E2, G2, C2, B4	Self-test failed to start.
Processor	0111 016	☼	☼	☼	☼	● *	E2, G2, F2, D2, B4	Self-test failed to end.
Processor	0111 016	●	●	●	●	● *	E2, D2, F2, G2, B4	Self-test failed to end.
Receiver Ext	0111 016	●	○	○	○	●	D2, F2, E2	Self-test stops on error.
Receiver	0111 016	○	●	○	○	●	F2, D2, E2, G2	Self-test stops on error.
Front End	0111 016	○	○	●	○	●	G2, E2, F2, D2	Self-test stops on error.
Processor	0111 016	○	○	○	●	●	E2, F2, G2, D2	Self-test stops on error.
TAC	0111 016	○	○	○	○	●	C2, G2, E2, D2	Self-test stops on error.
Modem Wrap	0111 013	–	–	–	–	–	H2, G2	Modem to adapter stops on error.

Legend:

○ = Off

☼ = Flashing

● = Continuously lighted

– = Not used

*Not always on or flashing.
**See table in section 5.4.5.1.

Notes:

1. *Replace in order of probability.*
2. *If two or more card LEDs are on, replace cards for all symptoms.*
3. *Indicator results shown with ALT2 switch held depressed.*

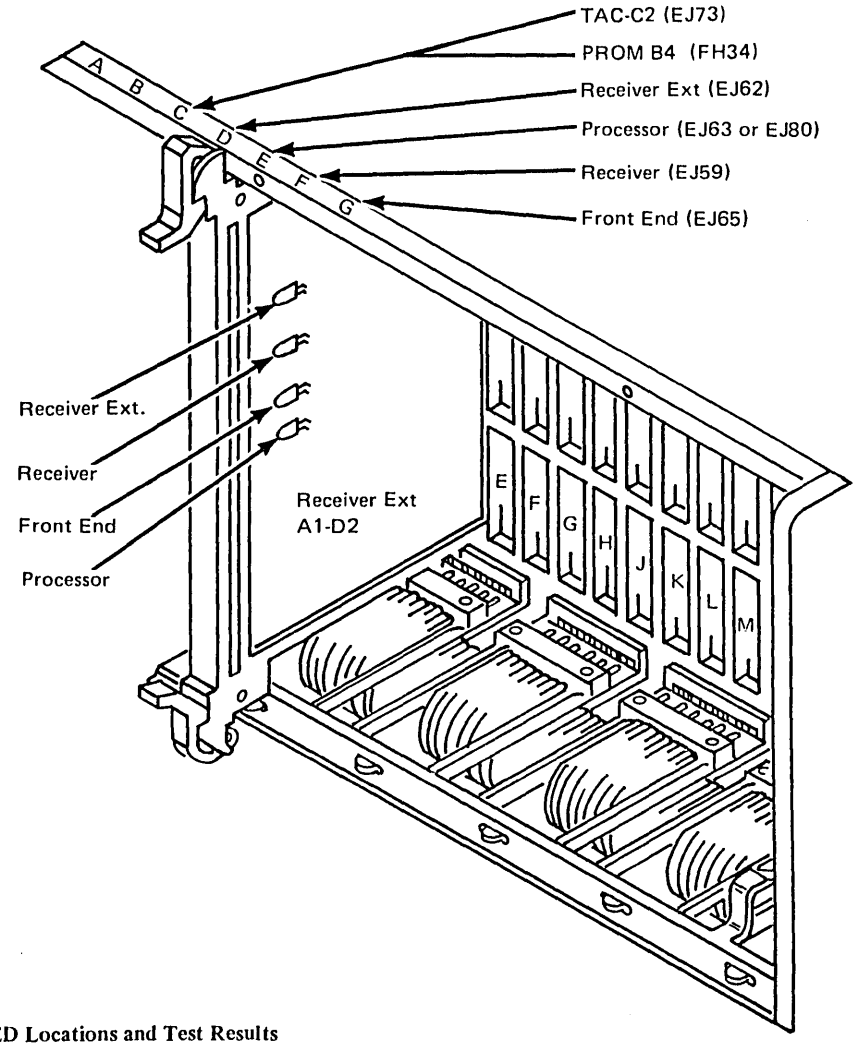

Figure 5-14. 9600-bps Integrated Modem Card LED Locations and Test Results

5.4.5.4 ALT2/IML Modem Wrap Test

Holding the ALT switch in position 2 and momentarily pressing the IML pushbutton will initiate the modem wrap test. If the wrap test is successful, the 0110 code indicated in the 8 4 2 1 indicators will change to an end code of 1111 (Carrier Detect is present) after approximately 3 seconds.

Note: *If the modem is not attached to an active teleprocessing line, the end code will be 1000 (Carrier Detect is not present). If the wrap test fails, the 0110 code will change to a continuous 0111 code for about 26 seconds and then start flashing.*

5.4.5.5 Test Alarm Card (TAC) Extended Diagnostic

The TAC allows the central site modem, via a 350-Hz tone, to initiate internal diagnostics to all modems on the telecommunications line. The TAC also sends a power-off warning to the host by transmitting a 350-Hz tone when the 3274 is either deliberately powered down or loses its power.

5.4.5.6 Procedure to Follow if IML Test 0111 is Flashing

1. Turn power off and then on, permitting the IML test and the modem self-test to run.
2. While the 0111 code is flashing, check the attached display at Port A0 or the 8421 indicators, for failing codes as shown in steps 3 and 4 below.

   Use the following chart to convert to 3274 codes:

Codes at Display A0	Codes at 8 4 2 1 Indicators
0111–013	0111–1101
0111–021 or 002	0111–0010
0111–016 or 001	0111–0001
0110–005	0110–0101
0110–009	0110–1001

3. If the failing code is 0111 013 at a display or 0111 1101 at the 3274, see Figure 5-12 for a 2400-bps modem, Figure 5-13 for a 4800-bps modem, or Figure 5-14 for a 9600-bps modem. Refer to code 013 for the replacement of cards.
4. If the failing code is 0111 016 at a display or 0111 0001 at the 3274, hold the ALT switch in position 2 (stop on error) and let the self-test cycle a few times. The Poor indicator should light if the self-test fails. Also, observe the LED indicators on the card located in A1D2.
5. Release the ALT switch.
6. Compare the LED failure indications with the appropriate chart located in Figure 5-12, 5-13, or 5-14. Isolate the failing card.
7. Turn power on to initiate IML and the self-test. Verify that the failure has been repaired.
8. If the failure is not repaired, go to the Integrated Modem entry MAP A130.

5.4.6 Transmit Level Adjustment

5.4.6.1 U.S. and Canada

The transmit level for Integrated Modems operating over nonswitched lines in the U.S. and Canada is preset to 0 dBm on the front end card (A1G2) during manufacture. This setting should not be changed. However, if the front end card must be replaced, ensure that the transmit level switches on the new card are set for 0 dBm, as explained in paragraph 5.4.7.

5.4.6.2 Other Countries

The transmit level for Integrated Modems operating over nonswitched lines in countries other than the U.S. and Canada varies according to country PTT regulations. The required transmit level for each country is preset on the front end card (A1G2) during manufacture. Usually, this setting will not have to be changed. Sometimes, however, the card must be replaced or the transmit level must be changed to compensate for local loop losses. If so, set the transmit level switches according to paragraph 5.4.7.

5.4.7 Front End Card Replacement and Adjustment

If the transmit level switches on the front end card A1G2 must be changed, refer to Figure 5-15 for the transmit level for your country. Refer to Figure 5-16 for the associated transmit level switch settings. The locations of the switches on the A1G2 card for 2400, 4800, and 9600 bps are shown in Figures 5-17, 5-18, and 5-19, respectively. Use only the switches indicated as "Nonswitched."

Figure 5-19 shows the locations of jumpers required for proper operation of the 9600-bps modem. Figure 5-20 shows a jumper required for proper operation of the 9600-bps modem receiver extension card.

Country (A/FE)*	Setting (dBm)	Country (E/ME/A)**	Setting (dBm)
Australia	-13	France	-15
Chile	- 6	Italy	-10
Japan	- 8	Switzerland	- 9
		United Kingdom	-13
Other A/FE Countries	0	Other E/ME/A Countries	- 6

*Americas/Far East Corporation
**Europe/Middle East/Africa Corporation

Figure 5-15. Transmit Levels (Nonswitched) for A/FE and E/ME/A Countries

Transmit Level	Switch			
	1	2	3	4
0	On	On	On	On
-1	Off	On	On	On
-2	On	Off	On	On
-3	Off	Off	On	On
-4	On	On	Off	On
-5	Off	On	Off	On
-6	On	Off	Off	On
-7	Off	Off	Off	On
-8	On	On	On	Off
-9	Off	On	On	Off
-10	On	Off	On	Off
-11	Off	Off	On	Off
-12	On	On	Off	Off
-13	Off	On	Off	Off
-14	On	Off	Off	Off
-15	Off	Off	Off	Off

Figure 5-16. Transmit Level Switch Settings

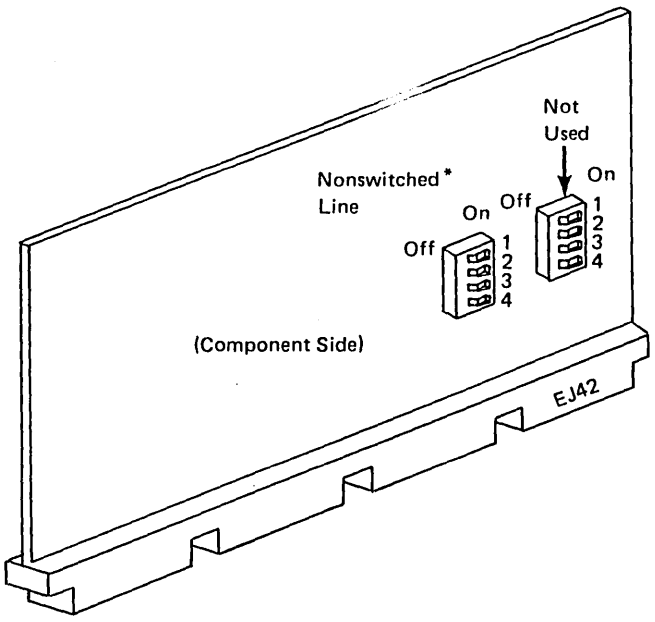

*Switches are shown in the Off position.

Figure 5-18. 4800-bps Integrated Modem Front End Card

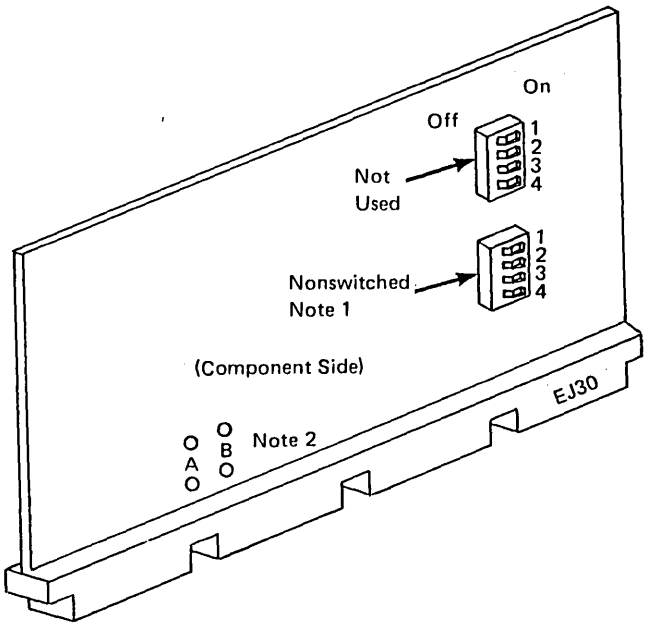

Notes:

1. *Switches are shown in the Off position.*
2. *Jumper (PN 2731801) not normally installed. See section 5.6.9.5.*

Figure 5-17. 2400-bps Integrated Modem Front End Card

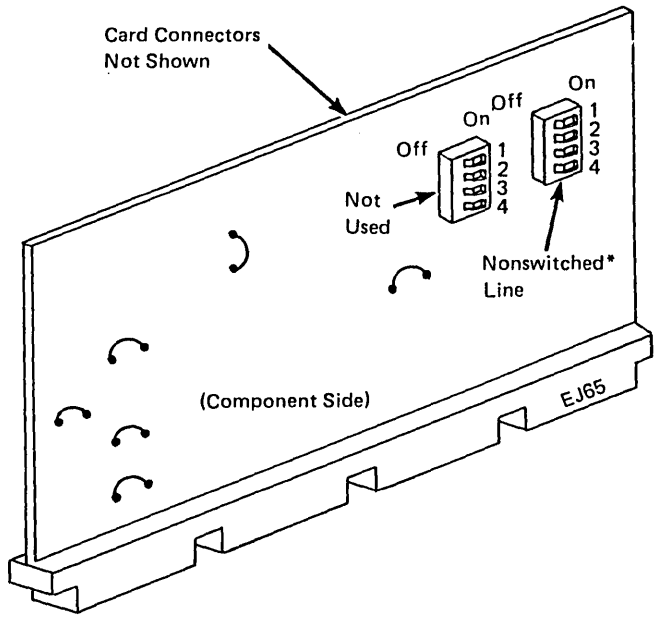

Notes:

1. *Switches as shown in Off position.*
2. *Card jumpers (6) PN 2731801 are required for proper operation of the modem.*

Figure 5-19. 9600-bps Integrated Modem Front End Card

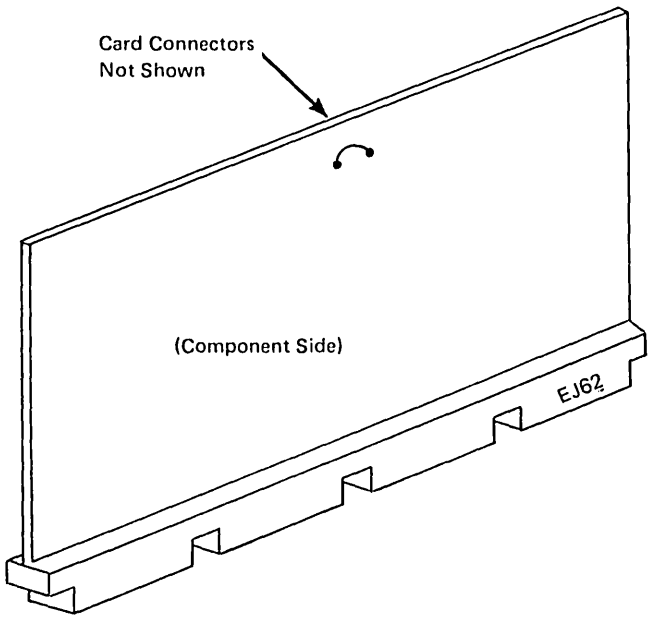

Note: *Card jumper (1) PN 2731801 is required for proper operation of the modem.*

Figure 5-20. 9600-bps Integrated Modem Receiver Extension Card

5.4.8 Test Alarm Card (TAC) Transmit Tone Adjustment

The TAC, located in A1C2, contains jumper pins used to set the transmit tone required for WT countries. The tone level for integrated modems, manufactured for use in the U.S. and Canada, is set at 0 dBm and thus no jumpers are required. The tone level for WT countries, however, varies according to PTT regulations and is set during manufacture according to codes specified at ordering time. Figure 5-21 shows the TAC tone levels required for the various A/FE and E/ME/A countries. To change or verify the TAC transmit tone level, see Figure 5-22 for the necessary jumpering.

Country (A/FE)*	Setting (dBm)	Country (E/ME/A)**	Setting (dBm)
Australia	-13	France	-15
Chile	- 6	Italy	-10
Japan	- 8	Switzerland	- 9
		United Kingdom	-13
Other A/FE Countries	0	Other E/ME/A Countries	- 6

*Americas/Far East Corporation
**Europe/Middle East/Africa Corporation

Figure 5-21. TAC Tone Levels for A/FE and E/ME/A Countries

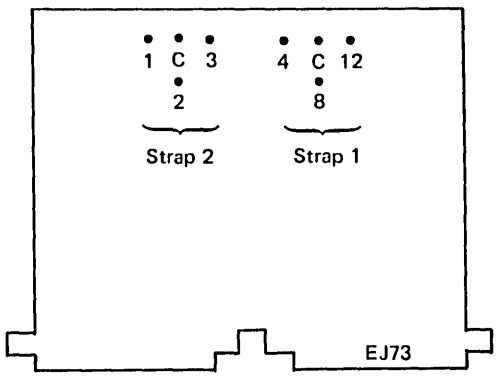

Straps Positions		Attenuation
Strap 1	Strap 2	(dB)
No strap	No strap	0
No strap	1	1
No strap	2	2
No strap	3	3
4	No strap	4
4	1	5
4	2	6
4	3	7
8	No strap	8
8	1	9
8	2	10
8	3	11
12	No strap	12
12	1	13
12	2	14
12	3	15

Notes:

1. *As shown — 0 dB domestic machines.*
2. *Install jumper PN 2731801 for World Trade countries.*
3. *C = common.*

Figure 5-22. Test Alarm Card (TAC) Transmit Tone Level Jumpering

5.4.9 Board Wiring Options

5.4.9.1 Teleprocessing Attachment (Point-to-Point and Multipoint)

The Integrated Modem can be configured either for point-to-point or as a multipoint tributary in which the master modem (at the CPU end) controls the line speed. Board wiring, needed to accommodate the teleprocessing attachment selected, is done during manufacturing. This is shown in Figure 5-23.

Attachment	Line Speed	Board Wiring
Point-to-Point	2400-bps	No extra wiring
	4800-bps	No extra wiring
	9600-bps	No extra wiring
Multipoint	2400-bps 4800-bps 9600-bps	Add G2P07-G2P09 G2P09-G2J08

Figure 5-23. Board Wiring for the Various Teleprocessing Attachment Configurations

5.4.9.2 Clear-to-Send Delay (Normally Not Adjusted)

The modem is set (no board wire required) for a normal (short) Clear-to-Send delay during manufacturing. Normally, it is not readjusted. However, if telecommunication line problems occur, a longer Clear-to-Send delay can be effected by adding a board wire from G2P11 to G2P08. This will improve data transmission during the Ready-for-Sending delay and improve equalization over the degraded lines.

After the line problem is corrected, the wire from G2P11 to G2P08 should be removed. Following are the Clear-to-Send delay values:

Speed	Delay			
2400 bps (Normal)	8.5 ms			
2400 bps (Long)	25 ms			
4800 bps (Normal)	24 ms			
4800 bps (Long)	50 ms			
9600 bps (Normal)	253 ms	Model 1	24 ms	Model 2
9600 bps (Long)	1753 ms		60 ms	

5.4.9.3 Carrier Detect Sensitivity (Normally Not Adjusted)

In the 2400- and 4800-bps modems, Carrier Detect sensitivity can be adjusted according to signal strength. A low sensitivity is used when there is excessive noise on the telephone lines. Modems are set for normal sensitivity (no board wiring required) (-0dB to -43dB) during manufacture. Low sensitivity (-0dB to -32dB) can be achieved by adding a wire from G2P13 to G2P08. Adjustment is not required in the 9600-bps integrated modem.

5.4.9.4 Continuous/Noncontinuous Carrier (Normally Not Adjusted)

A 9600-bps point-to-point modem (Model 1) is set (no board wiring required) during manufacture for continuous carrier (normal) operation. Continuous carrier means that the modem will maintain a carrier signal over the transmission line regardless of the Request-to-Send signal. Noncontinuous carrier means that the modem will cease to maintain a carrier signal over the transmission line when the Request-to-Send signal is off. The central site modem must match the integrated modem. To operate in noncontinuous carrier, a board wire must be added from G2P13 to G2P08.

5.4.10 Card Wiring Options

5.4.10.1 Transmission Pre-Emphasis for 2400-bps (Normally Not Adjusted)

The pre-emphasis option for 2400-bps allows better data transmission on particularly distorted nonswitched communication lines. See Figure 5-17.

One jumper can be plugged on the front end card providing the following pre-distortions.

Position A: -800 μs group delay slope
Position B: +800 μs group delay slope

Note: *The jumper (PN 2731801) is not provided with the card.*

5.4.11 2400-, 4800-, and 9600-bps Integrated Modem Reference Information

The following figures contain various information relating to 2400-, 4800-, and 9600-bps Integrated Modem cards. Figure 5-24 is a chart showing card functions, locations, and card codes. Although the part number of a particular card may change because of engineering changes, the card code will remain the same. This will facilitate the ordering of replacement cards. Figure 5-25 shows top card connector pin locations. This chart will aid in probing top card connector pins. Figure 5-26 describes the cabling between the EPROM card and the Processor Card. Figure 5-27 shows the removal of the ROS module and the removal tool.

5.5 3274 System Grounding

For the 3274 Models 51C and 52C grounding requirements, see Figure A-11.

		TP Network Attachment				
IM Speed	Card Function		Non Switched	Point to Point	Multi-Point	Card Code[1]
2400	Front End	G2	Yes	Yes	Yes	EJ30
2400	Processor	D2	Yes	Yes	Yes	EJ29
4800	Front End	G2	Yes	Yes	Yes	EJ42
4800	Receiver	F2	Yes	Yes	Yes	EJ43
4800	Processor	D2	Yes	Yes	Yes	EJ66
9600	Front End	G2	Yes	Yes	Yes	EJ65
9600	Receiver	F2	Yes	Yes	Yes	EJ59
9600	Receiver Ext	D2	Yes	Yes	Yes	EJ62
9600	Processor (Pt-to-Pt)	E2	Yes	Yes	—	EJ63
9600	Processor (Multipoint)	E2	Yes	—	Yes	EJ80
2400, 4800, 9600	TAC	C2	Yes	Yes	Yes	EJ73
2400, 4800, 9600	PROM	B4	NA[2]	NA[2]	NA[2]	FH34

[1] Located on card connector.
[2] NA = not applicable.

Figure 5-24. 2400-, 4800-, 9600-bps Card Functions, Locations, and Codes

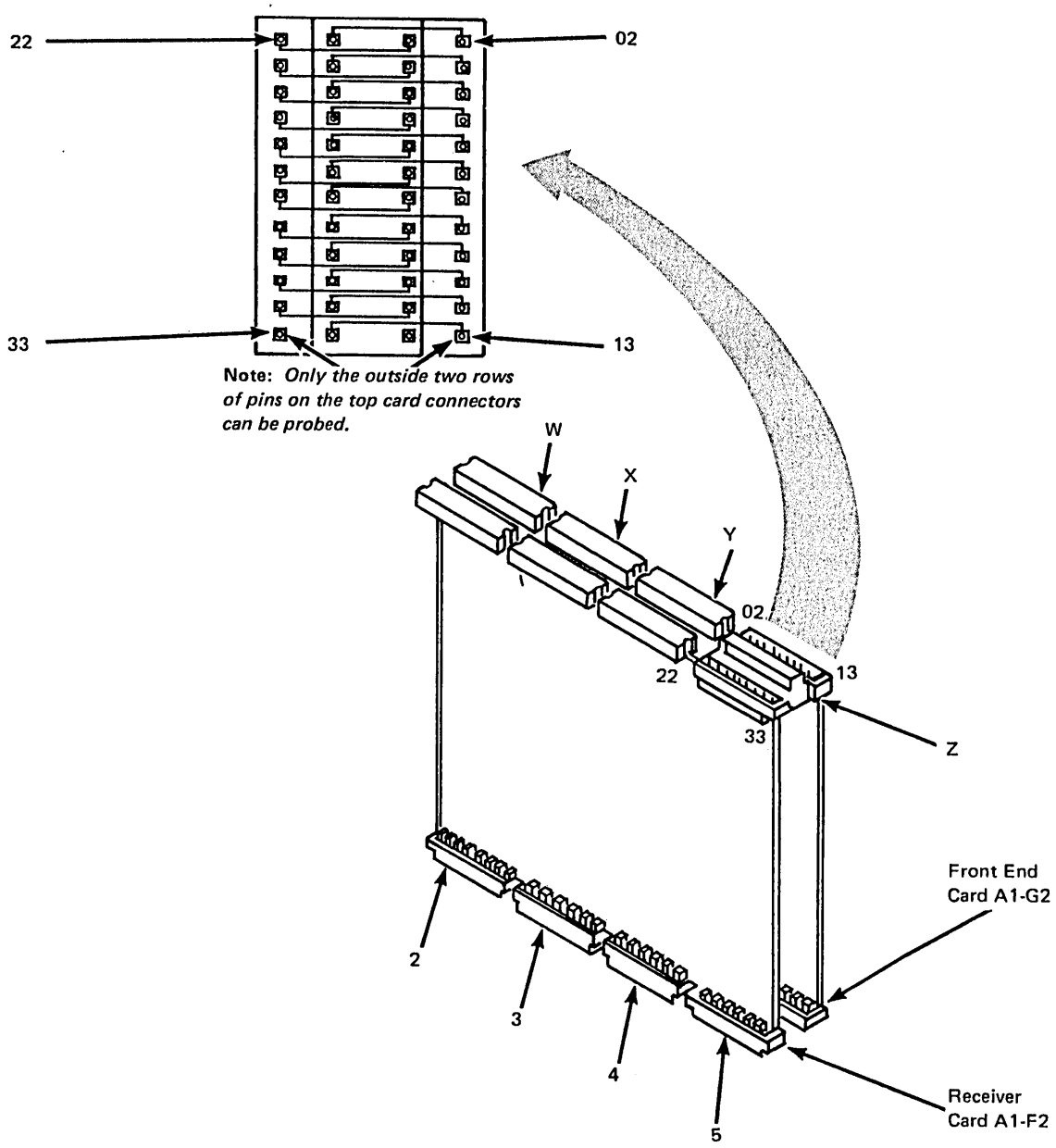

Note: *Cards shown are for a 4800-bps Integrated Modem.*

Figure 5-25. Top Card Connector Pin Locations

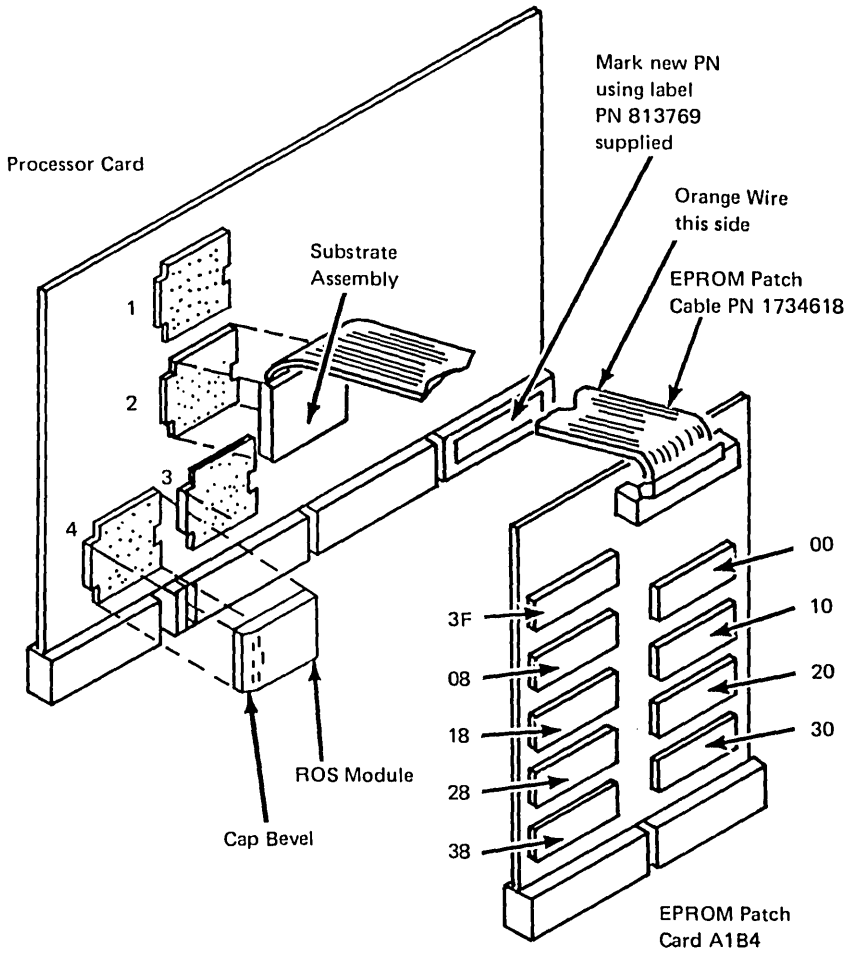

Note: *The PROM patch card is used when functional changes are required for the Integrated Modem. The PROM card connects via a cable to the Processor Card module socket. All pluggable ROS modules that are removed from the Processor Card are stored in a plastic box in the 3274. Some of these modules may be used again when the field change updates the Processor Card with the released level part numbers. The ROS module removal tool is shown in Figure 5-27.*

Figure 5-26. EPROM-Card-to-Processor-Card Cabling

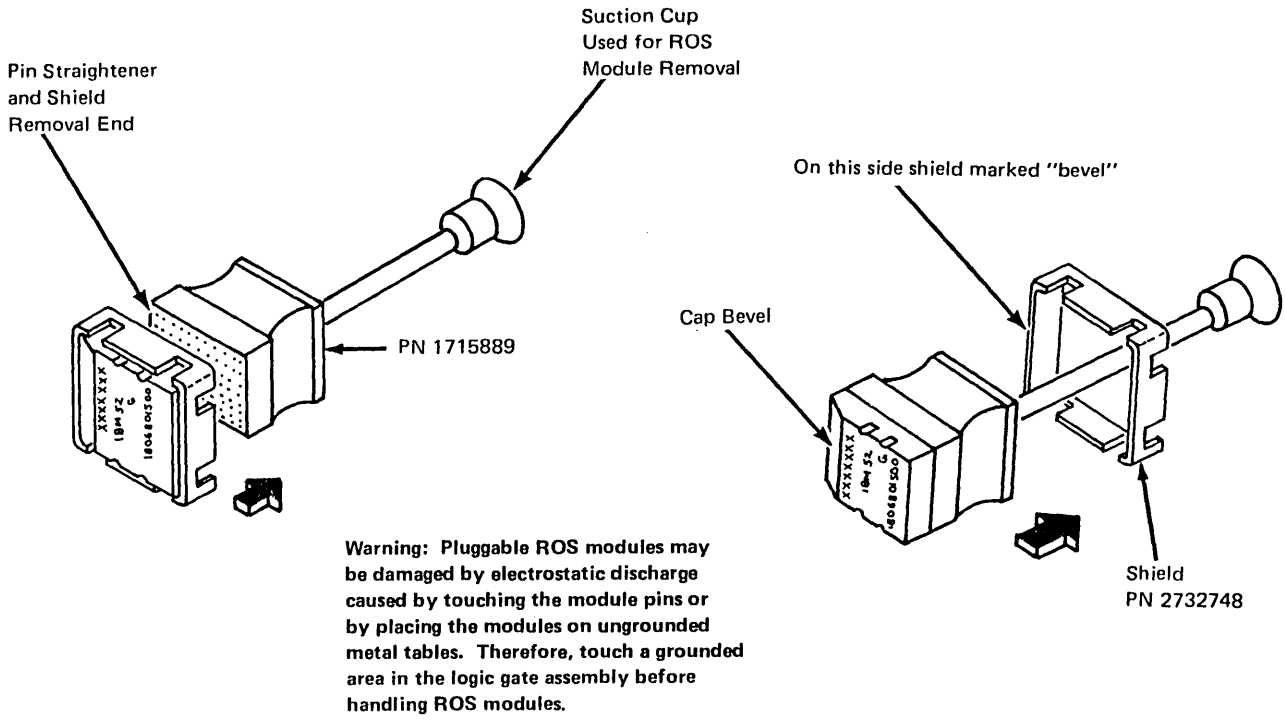

Figure 5-27. Pluggable ROS Removal Tool

5.6 Link Problem Determination Aid (LPDA)

The link problem determination aid (LPDA) function is a host-invoked diagnostic aid that allows the user to perform link problem determination without operator intervention at either the master modem or the 3274. When the LPDA function is invoked, commands to and responses from the modem under test use the same data paths in the modem that are used in normal data transmission between DTE and modem.

Program support in the host DTE is required for LPDA. The using system (host DTE) documentation describes in more detail the LPDA requests and responses that it uses.

The support program interprets the results in order to localize the fault to:

- The master modem
- The 3274 integrated modem
- The DTE interconnection, or
- The communication line

5.7 Modem Address Switches

The Modem Address switches, located behind the operator panel (Figure 5-28), must be set correctly before the 3274 can communicate LPDA tests with the 3274. These switches must be set to the binary equivalent of either your BSC control unit address (the hexadecimal polling address you obtained from the system programmer for your response to sequence number 301) or your SDLC control unit address (your response to sequence number 302). Failure to set the Modem Address switches properly will result in valid data operations of the 3274 but inability to execute the LPDA function of the integrated modem.

Use Figure 5-29 to convert your sequence number response to its binary equivalent. For example, if your response to sequence number 301 is 21, the eight Modem Address switches should be set as shown in Figure 5-30.

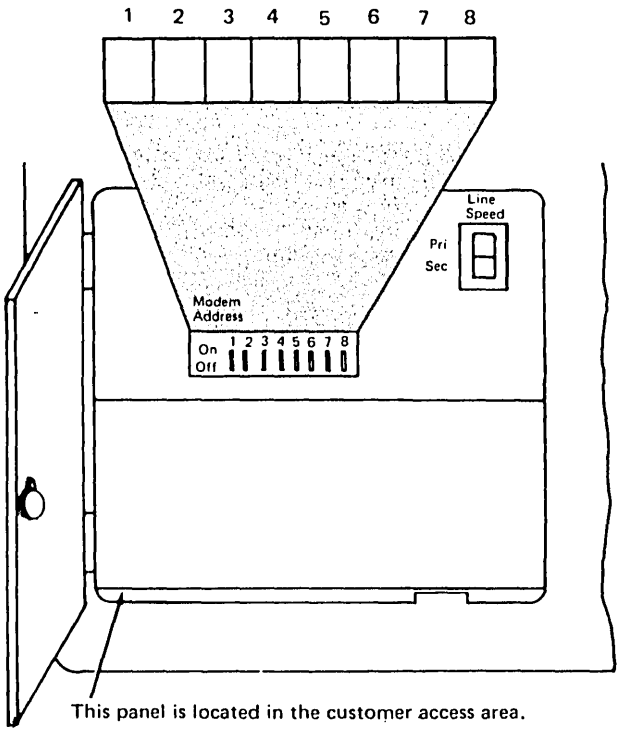

Figure 5-28. Operator Panel

Response to Sequence Number 301	2				1			
Switch Number	1	2	3	4	5	6	7	8
Switch Setting	Off	Off	On	Off	Off	Off	Off	On

Figure 5-30. Example of 3274 Model 51C Modem Address Switch Settings

Numeric Value	Modem Address Switch Settings			
0	Off	Off	Off	Off
1	Off	Off	Off	On
2	Off	Off	On	Off
3	Off	Off	On	On
4	Off	On	Off	Off
5	Off	On	Off	On
6	Off	On	On	Off
7	Off	On	On	On
8	On	Off	Off	Off
9	On	Off	Off	On
A	On	Off	On	Off
B	On	Off	On	On
C	On	On	Off	Off
D	On	On	Off	On
E	On	On	On	Off
F	On	On	On	On

Figure 5-29. Conversion of BSC Control Unit Address and SDLC Control Unit Address to Binary-Equivalent Modem Address Switch Settings on 3274 Model 51C

5.8 3290 Address Configuration (Configuration Supports T and D)

Each customized 3274 port has an assigned port address. This port address is considered to be the primary logical-terminal address for the port. To support the Multiple Interactive Screen (MIS) function for an attached 3290 display station, the Type A port to which the 3290 is attached must be assigned the appropriate number (1–4) of secondary logical-terminal addresses in addition to the primary logical-terminal address.

Note the following (refer to Figure 5-31 as you do so):

- Port 0 (A) cannot be used for MIS devices.
- All used port addresses (B) are designated as primary logical addresses.
- The next unused logical address (C), in this case 8, is designated as the first secondary logical address.

Primary Logical Address	Device Type	Number of Secondary Logical Addresses	Secondary Logical Addresses
0 (A)	3278	–	–
1 MIS	3290	1	8 ← (C)
2 MIS	3290	1	9
3 MIS	3290	2	10, 11
(B) 4 – (D)	3287 ← (E)	2 (G)	12, 13 ← (F)
5 MIS	3290	3	14, 15, 16
6 MIS	3290	3	17, 18, 19
7 MIS	3290	4	20, 21, 22, 23 ← (H)

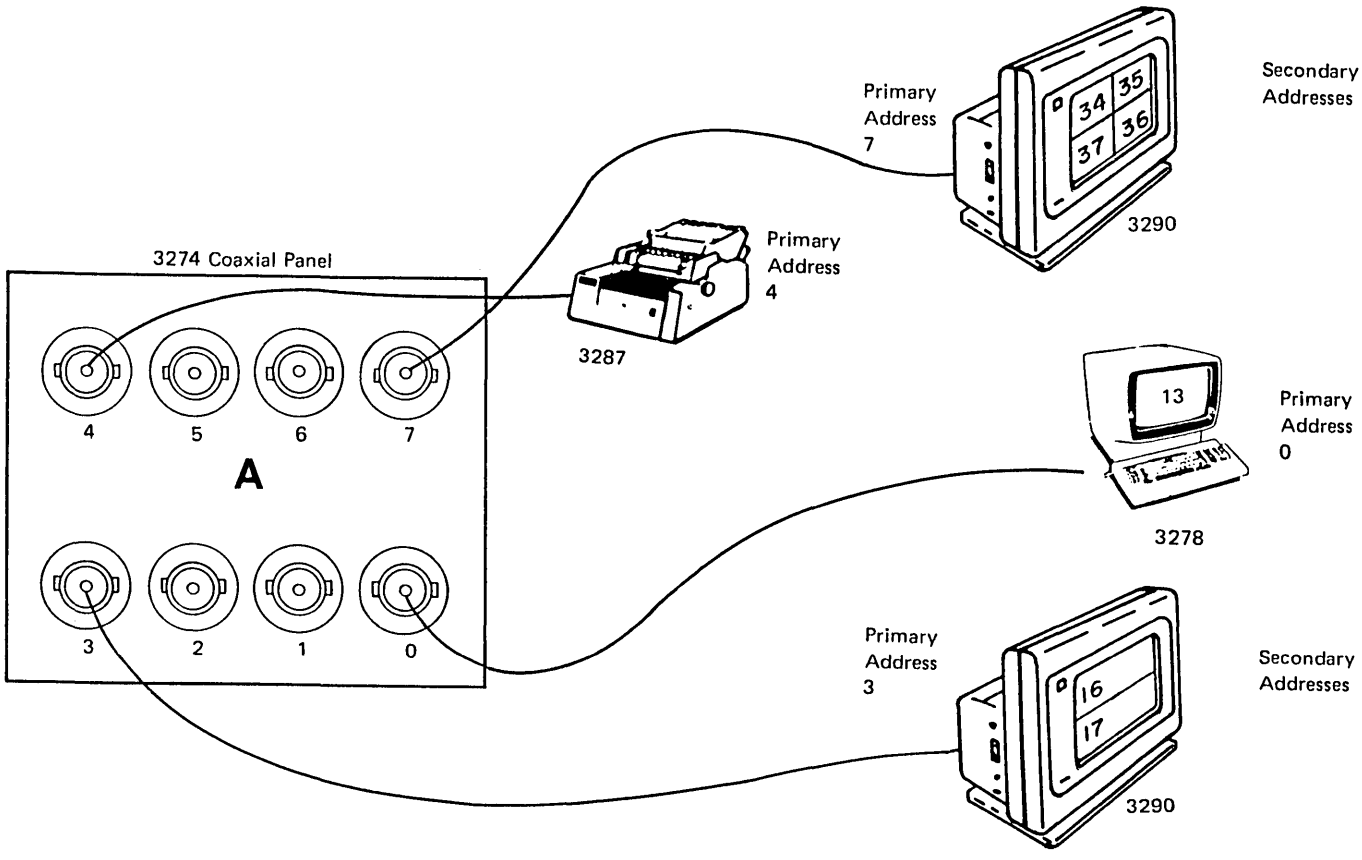

Figure 5-31. Addressing Configuration for Multiple Interactive Screen (MIS) – 3290 Device Attachment, Model 51C

5.8.1 Configuration Support T

All Multiple Interactive Screen ports (D) must be assigned in a sequential group. If a non-MIS device (E) is attached to a MIS-configured port, the secondary logical-terminal address (F) assigned to that port is reserved and may not be addressed by the host. Recustomization is necessary to free such addresses, and will cause all secondary addresses to be redefined.

The number of secondary logical addresses (G) must be in ascending order. For example, the number of the secondary address assigned to Port 3 must be equal to or greater than the number of secondary addresses.

For 3274s operating in BSC, the maximum number of logical addresses is 32 (H). For 3274s operating in SDLC, the maximum number of logical addresses is 76.

If an addressing problem is suspected or if MIS devices cannot be configured for multiple interactive screens, check customization responses 112, 116, 117, and 118 (Configuration Support D) or 112, 170, and 171 (Configuration Support T). If the problem still exists, refer to Chapter 2, Step 5.

5.8.2 Configuration Support D

If the 3290 with interactive screen was previously customized, running the /B test displays a table that shows which physical ports have a primary and secondary address associated with them. See Chapter 2, Figures 2-7 and 2-8.

Warning: When device cables are being exchanged and the devices are different or the screen size or features are not the same, addressing problems may occur which can affect system operation.

It is possible to have unassigned Type A ports if port addresses were individually configured. Run the /3 test, and check for x in line 2. See Step 5, item e, example C.

Chapter 6. 3274 Encrypt/Decrypt Feature

6.1 Feature Description

The 3274 Encrypt/Decrypt feature can be installed on the 3274 Model 51C. An organization using the Encrypt/Decrypt feature has the ability to protect the information transmitted and received through the communication network from unauthorized disclosure. The Encrypt/Decrypt feature accomplishes this data protection by encrypting (encoding) messages sent to the host system and decrypting (decoding) messages received from the host system. Messages from the host system to the 3274 (or its attached units) that have been encrypted are decrypted before being displayed or printed. Messages from the 3274 (or its attached units) will be encrypted before being sent over the communication line to the host system.

A 16-character Terminal Master Key and an 8-character control unit identification (CID) must be entered into the 3274 (by using the 3178, 3278 or 3279 Display Station attached to the 3274 port A0) before the Encrypt/Decrypt feature can be used. When the 3274 is turned off, the Terminal Master Key is maintained by a mercury battery in the 3274. The procedures in this section for replacing the Encrypt/Decrypt feature battery, entering the Terminal Master Key, verifying the Terminal Master Key, and testing the Encrypt/Decrypt feature are also contained in the customer's *3274 Control Unit Operator's Guide, GA23-0023.*

6.1.1 IML Display Indications

When the 3274 contains the Encrypt/Decrypt feature and a normal IML is performed, containing the system diskette, a functional test of the Encrypt/Decrypt card (AlA2) will be performed by the IML tests. If this test fails, a blinking 1001 will be displayed on the operator panel.

When the 3274 is loaded with the Encrypt/Decrypt feature diskette and the master key procedure is entered, and verified or tested, the error codes 397, 398, and 399 may be displayed. When this occurs, the customer is directed by the *Problem Determination Guide* to replace the customer-accessible mercury battery.

6.1.2 Feature Components

The Encrypt/Decrypt feature components are the control logic card (A1A2), a customer-replaceable +4V mercury battery (PN 1655387), an Enable Write master key switch, and operator panel cable connections. The cable connections and wiring are shown in Figure 6-1.

6.1.3 Encrypt/Decrypt Failures

Note: *Removing the Encrypt/Decrypt card (A1A2) or interrupting the battery voltage to the Encrypt/Decrypt card destroys the master key. If this should occur, the customer security administrator must reload the master key.*

If crypto IML tests fail (a blinking 1001 code is displayed), reseat and/or replace card A1A2.

If display error codes 397, 398, or 399 appear at the bottom of the display screen, verify that the battery voltage on the A1 board is correct. See paragraph 6.2. If the battery voltage is correct, perform the following additional checks:

1. Reseat and/or replace card A1A2.
2. See Figure D-10 and perform the following:
   a. Check the battery voltage (+3.5V to +4.5V) at A2G09. See paragraph 6.2.
   b. Check that "Write Enable" can be switched through the Encrypt/Decrypt Switch at A2P12.

Verify successful repair by performing the Encrypt/Decrypt Feature Test procedure as outlined in paragraph 6.6.

6.2 Battery Power Supply Check

The customer replaceable mercury battery is located below the Encrypt/Decrypt security keylock. The battery voltage can be measured at board A1H2 pins G09(+) and N2D08 (-). The voltage level should be between +3.5V and +4.5V while the 3274 power is off.

CAUTION
The battery may explode if recharged or disposed of in fire. For recycling the battery, follow local procedures or return it to IBM.

6.3 Procedure for Encrypt/Decrypt Battery Replacement

The Encrypt/Decrypt battery retains the Terminal Master Key while 3274 power is off. If the battery is disconnected (or is too weak) while 3274 power is off, the Terminal Master Key will be lost and must be reentered by performing the procedure in paragraph 6.4.

To replace the Encrypt/Decrypt battery, proceed as follows:

1. Ensure that 3274 power is on.
2. If any terminals attached to the 3274 are in use, notify all terminal operators that the 3274 operation is going to be interrupted; then wait until all operations are completed.
3. The battery for the Encrypt/Decrypt feature is located in the customer access area **2** . Open the customer access door **1** .
4. Remove the old battery **3** from the clip **4** on the bracket.
5. Unlatch the connector latch **6** , and disconnect the battery connector **5** .
6. Connect the battery connector **5** to the new battery **3** .
7. Insert the new battery into the clip **4** on the bracket.
8. Close the customer access door.

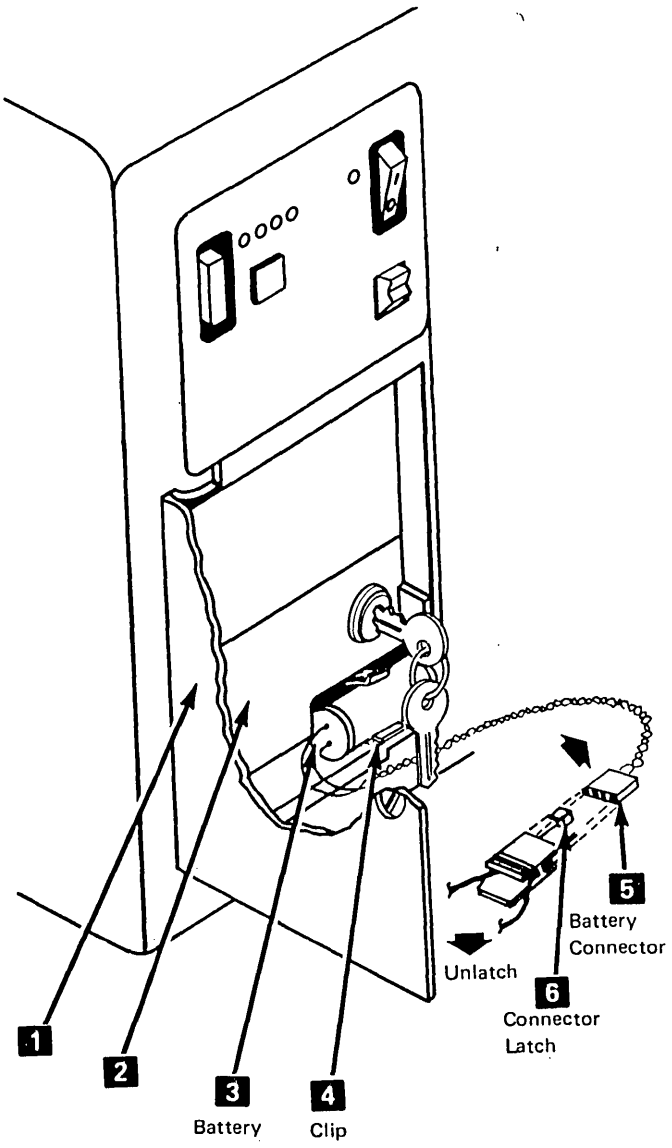

CAUTION
When disposing of the replaced battery, observe the disposal instructions on the label attached to the 3274, near the battery location, and the battery manufacturer's disposal instructions.

Note: *If the 3274 is powered on initially with the security keylock in the On position, key parity errors (X 398) may occur. To clear these errors:*

1. *Turn security keylock Off.*
2. *Disconnect the battery.*
3. *Power Off the 3274.*
4. *Reconnect the battery.*
5. *Power On the 3274.*
6. *The customer must reenter the Terminal Master Key, using the procedure in paragraph 6.4.*

6.4 Entering the Terminal Master Key

Perform this procedure only if you are authorized to enter the Terminal Master Key. Contact the appropriate person in your organization to obtain the Terminal Master Key, Terminal Master Key Verification value (if available), and the Control Unit ID (CID).

1. If any terminals attached to the 3274 are in use, notify all terminal operators that the 3274 operation is going to be interrupted; then wait until all operations are ended.
2. Use the 3178/3278/3279 attached to 3274 port A0 to perform this procedure. Locate the 3278/3279 attached to 3274 port A0; make sure it has a keyboard and is turned on.
3. An X 397, X 398, or X 399 code appearing in the Operator Information Area during this procedure indicates an Encrypt/Decrypt failure. Refer to the 3274 Problem Determination Guide for the recovery procedure.
4. Place the diskette drive operator knob in the open position (as shown in the illustration) and remove the diskette. Insert the Encrypt/Decrypt diskette into the diskette enclosure and place the operator knob in the closed position.

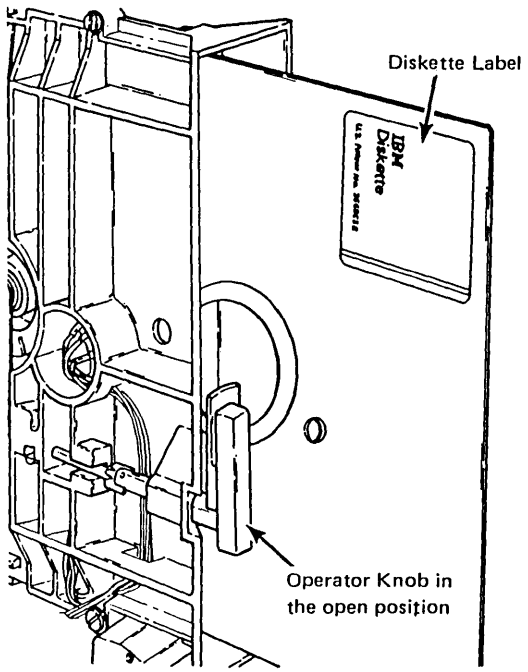

5. If the 3274 is turned on, press the IML pushbutton on the 3274 control panel; if the 3274 is turned off, press the ⊓ portion of the 3274 On/Off switch.
6. If the security key is not inserted into the 3274 security keylock (located in the customer access area, below the Operator Panel), obtain the security key from the appropriate person in your organization and insert the key into the security keylock.
7. Make sure the security keylock is in the full clockwise (horizontal) position; if it is not, turn the key clockwise to the horizontal position.
8. Go to the 3178/3278/3279 Display Station that is attached to 3274 port A0. The top two rows of the screen should contain the following information:

   001
   XXXXXXXXXXXX...X

9. Use the keyboard to enter the characters 1234567690ABCDEF into the character positions occupied by the X's. If you miskey any characters, use the cursor move keys (←—and—→) on the right side of the keyboard to move the cursor to the character position(s) to be corrected.
10. Press the ENTER key. The top two rows of the display screen should change to:

    EMKV
    ---- ---- ---- ----

    Note: *If a 1 or a 2 appears at the top center of the screen and EMKV does not appear, you entered the 1 through F characters incorrectly at Step 9. To recover, enter the 1 through F characters correctly and press the ENTER key again.*

11. EMKV is a prompt message meaning "enter master key value". Use the keyboard to enter (without spaces) the 16 characters of the Terminal Master Key into the positions occupied by the hyphens; the valid characters that can be entered are the numbers 0 through 9 and the letters A through F. As each character is entered, the corresponding hyphen will be replaced by an asterisk (*). If you miskey a character, press the RESET key and enter all 16 characters of the Terminal Master Key again.
12. Press the ENTER key. The top two rows of the display screen should change to:

    CID
    ---- ----

    Note: *If CID is not displayed and a Do Not Enter symbol (X) is displayed in the Operator Information Area, you did not enter the correct Terminal Master Key in Step 11. The meaning of the Operator Information Area symbols is explained in the 3278 Problem Determination Guide. To recover, press the RESET key, enter the correct Terminal Master Key, and press the ENTER key.*

13. Use the keyboard to enter the Control Unit ID (CID) into the positions occupied by the underscores. If the ID is less than 8 characters, enter only as many characters as you have and the remainder of the field will be filled with zeros. As each character is entered, the corresponding underscore will be replaced by an asterisk (*). If you miskey a character, press the RESET key and enter the ID again.

14. Press the ENTER key. The top two rows of the display screen should change to:

    VP 99
    YYYYYYYYYYYYYYYY

    The VP message means "verification pattern," and the Y characters represent the Terminal Master Key Verification value. If you have the Terminal Master Key Verification value for the Terminal Master Key just entered, make sure the verification value displayed is correct; if it is not, press the RESET key and return to Step 5, and try to enter the Terminal Master Key again.

15. Press the ENTER key. When the ENTER key is pressed (second time), the top two rows of the display screen should change to:

    VP 99
    XXXXXXXXXXXXXXXX

    The keyboard is now disabled and cannot be reset until an IML operation is performed. To continue your operation, turn the 3274 Encrypt/Decrypt security keylock to the counterclockwise (vertical) position, remove the security key from the lock, remove the Encrypt/Decrypt diskette, perform an IML operation with the proper diskette loaded, and proceed with your normal operation.

6.5 Verifying the Terminal Master Key

Use the following procedure to verify that the Terminal Master Key has not been changed; this procedure will not alter the Terminal Master Key. This procedure causes an indication of whether the Terminal Master Key has been changed (99, if the Terminal Master Key has not been changed; 44, if the Terminal Master Key has been changed), to be displayed at the top center of the display screen on the 3178, 3278, or 3279 Display Station attached to 3274 port A0.

1. If any terminals attached to the 3274 are in use, notify all terminal operators that the 3274 operation is going to be interrupted; then wait until all operations are ended.

2. Use the 3178, 3278 or 3279 attached to 3274 port A0 to perform this procedure. Locate the 3278/3279 attached to 3274 port A0; make sure it has a keyboard and is turned on.

3. An X 397, X 398, or X 399 code appearing in the Operator Information Area during this procedure indicates an Encrypt/Decrypt failure. Refer to the 3274 Problem Determination Guide for the recovery procedure.

4. Place the diskette drive operator knob in the open position (as shown in the illustration) and remove the diskette. Insert the Encrypt/Decrypt diskette into the diskette enclosure and place the operator knob in the closed position.

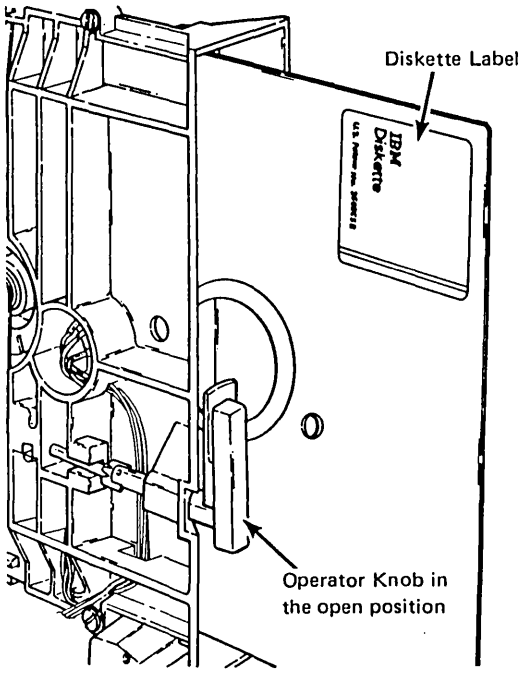

5. If the 3274 is turned on, press the IML pushbutton on the 3274 control panel; if the 3274 is turned off, press the ⊓ portion of the 3274 On/Off switch.

6. Make sure the security keylock is in the fully counterclockwise (vertical) position; if it is not, turn the key counterclockwise to the vertical position.

7. Go to the 3278/3279 display station that is attached to 3274 port A0. The top two rows of the screen should contain the following information:

    001
    XXXXXXXXXXXXXXXX

8. Use the keyboard to enter the characters 1234567890ABCDEF into the character positions occupied by the X's. If you miskey any characters, use the cursor move keys (← and →) on the right side of the keyboard to move the cursor to the character position(s) to be corrected.

9. Press the ENTER key. The top two rows of the display screen should change to:

   EMKV
   ---- ---- ---- ----

   Note: *If a 1 or a 2 appears at the top center of the screen and EMKV does not appear, you entered the 1 through F characters incorrectly at Step 8. To recover, enter the 1 through F characters correctly and press the ENTER key again.*

10. Press the ENTER key. If the Terminal Master Key is as expected, 99 will appear at the top center of the screen; if it is not as expected, 44 will appear at the top center of the screen.

11. To continue your operation, remove the Encrypt/Decrypt diskette and proceed with your normal operation.

6.6 Encrypt/Decrypt Feature Test

The 3274 Problem Determination Guide may instruct you to perform this test procedure when you are having problems operating with the Encrypt/Decrypt feature. This test modifies the Terminal Master Key currently being used by the 3274.

This test involves entering a Terminal Master Key of "0123456789ABCDEF"; when this Terminal Master Key is entered, a verification value of "F188 D850 4894 139E" is displayed if the Encrypt/Decrypt feature is operating properly.

1. If any terminals attached to the 3274 are in use, notify all terminal operators that the 3274 operation is going to be interrupted; then wait until all operations are ended.

2. Use the 3178, 3278 or 3279 attached to 3274 port A0 to perform this procedure. Locate the 3278/3279 attached to 3274 port A0; make sure it has a keyboard and is turned on.

3. An X 397, X 398, or X 399 code appearing in the Operator Information Area during this procedure indicates an Encrypt/Decrypt failure. Refer to the 3274 Problem Determination Guide for the recovery procedure.

4. Place the diskette drive operator knob in the open position (as shown in the illustration) and remove the diskette. Insert the Encrypt/Decrypt diskette into the diskette enclosure and place the operator knob in the closed position.

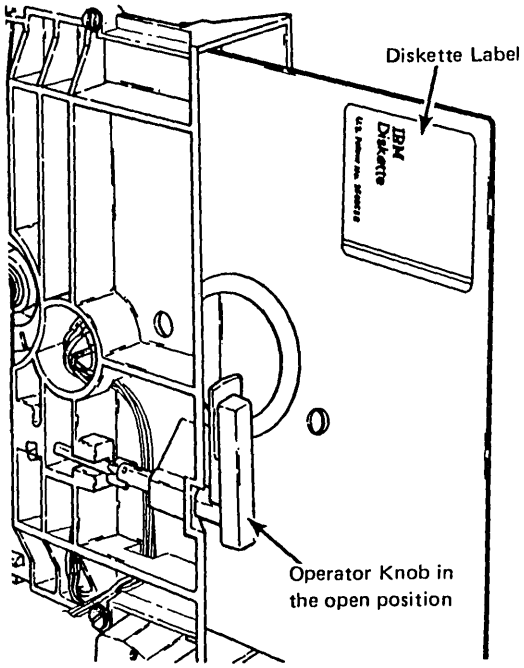

5. If the 3274 is turned on, press the IML pushbutton on the 3274 control panel; if the 3274 is turned off, press the ⊓ portion of the 3274 On/Off switch.

6. If the security key is not inserted into the 3274 security keylock (located in the customer access area, below the Operator Panel), obtain the security key from the appropriate person in your organization and insert the key into the security keylock.

7. Make sure the security keylock is in the fully clockwise (horizontal) position; if it is not, turn the key clockwise to the horizontal position.

8. Go to the 3278/3279 display station that is attached to 3274 port A0. The top two rows of the screen should contain the following information:

   001
   XXXXXXXXXXXXXXXX

9. Use the keyboard to enter the characters 1234567890ABCDEF into the character positions occupied by the X's. If you miskey any characters, use the cursor move keys (← and →) on the right side of the keyboard to move the cursor to the character position(s) to be corrected.

10. Press the ENTER key. The top two rows of the display screen should change to:

    EMKV
    ---- ---- ---- ----

    Note: *If a 1 or a 2 appears at the top center of the screen, you entered the 1 through F characters incorrectly at step 9. To recover, enter the 1 through F characters correctly and press the ENTER key again.*

11. Note: *The following sequence of characters is different from that used in the previous procedures.*

    Use the keyboard to enter (without spaces) the characters "0123456789ABCDEF" into the positions occupied by the hyphens. As each character is entered, the corresponding hyphen will be replaced by an asterisk (*). If you miskey a character, press the RESET key and enter the 0 through F characters again.

12. Press the ENTER key. The top two rows of the display screen should change to (*do not enter a CID*):

    CID
    ---- ----

    Note: *If CID is not displayed and a Do Not Enter symbol (✖) is displayed in the Operator Information Area, you did not enter the correct Terminal Master Key in Step 11. The meaning of the Operator Information Area symbols is explained in the 3178, 3278 or 3279 Problem Determination Guide. To recover, press the RESET key, enter the correct Terminal Master Key, and press the ENTER key.*

13. Press the ENTER key. The top two rows of the display screen should change to:

    VP 99
    F188D8504894139E

    If the above characters are not displayed, the Encrypt/Decrypt feature is not operating correctly.

14. To continue your operation, enter your organization's Terminal Master Key into the 3274 by performing the Entering the Terminal Master Key procedure (paragraph 6.4), beginning at Step 5.

Chapter 7. Response Time Monitor Feature

7.1 Feature Description

The Response Time Monitor (RTM) card, and its associated microcode, interfaces with the 3274 control logic card. The RTM card provides the means whereby a customer can differentiate between good and bad responses, as well as questionable ones. The RTM feature measures and records the transaction times of inbound host attention operations from display stations that communicate with the host. Depending on how the 3274 is customized, the RTM feature obtains information from a network management application in the host, from a subsystem display operator, or both.

When the RTM feature support is customized in the 3274, a series of five counters is allocated for each configured device or logical terminal, representing intervals into which the various times are mapped. During the customizing process, up to four counters may be set up by specifying the boundaries (maximum times) associated with each response. By properly specifying boundary values, a customer can obtain a distribution of responses for each logical terminal in his network.

The operator of an authorized display can retrieve and display the RTM logs of all configured devices in his network. By the operator's performing the A4/1 Test, the log information is displayed for eight logical terminals at a time, until all device logs have been displayed. See *3274 Control Unit Models 51C, 52C, and 61C Maintenance Concepts*, SY27-2528.

7.2 Microcode Support

The RTM feature is supported by Microcode Configuration Supports C and D only. The D support requires that a two-sided diskette drive (51TD) be installed.

7.3 IML Testing

When a 3274 contains the RTM feature and is customized for RTM, a normal IML, using the system/load diskette, will perform a functional test of RTM card No. 11. If this test fails, a blinking 1011 code will be displayed in the 3274 8 4 2 1 indicators.

When the IML is completed and the operational code is loaded, any RTM adapter errors detected by the operational code will generate a solid 1011 code in the 3274 8 4 2 1 indicators. These errors will also generate nnn code 382 on all attached displays.

Appendix A. Locations

Appendix A provides illustrations showing physical locations. In addition, foldouts (Figure A-12 at the rear of the manual on pages FO-3 and FO-5) showing logic board layouts, card locations, and a card reference chart are provided to facilitate MAP use.

Contents

Figure A-1. Logic Board – Card, Connector, and Pin Locations A-2
Figure A-2. Pin Locations – Top Card Connector A-3
Figure A-3. Field Replaceable Units (FRUs) A-4
Figure A-4. Field Replaceable Unit (FRU) Part Numbers A-5
Figure A-5. Card and Board Part Number Selection A-6
Figure A-6. Configuration and CE Data Card (Stored in Customer Access Door, Front Pocket) A-7
Figure A-7. Printer Authorization Matrix A-8
Figure A-8. General Logic Probe A-9
Figure A-9. Prime Power Box Locations A-10
Figure A-10. 3274 Models 51C and 52C Grounding A-11
Figure A-11. Card PN 8517087 (Control Storage Min No. 1) – Card Plugging Caution A-12
Figure A-12. Card Location (Foldouts) FO-3, FO-5

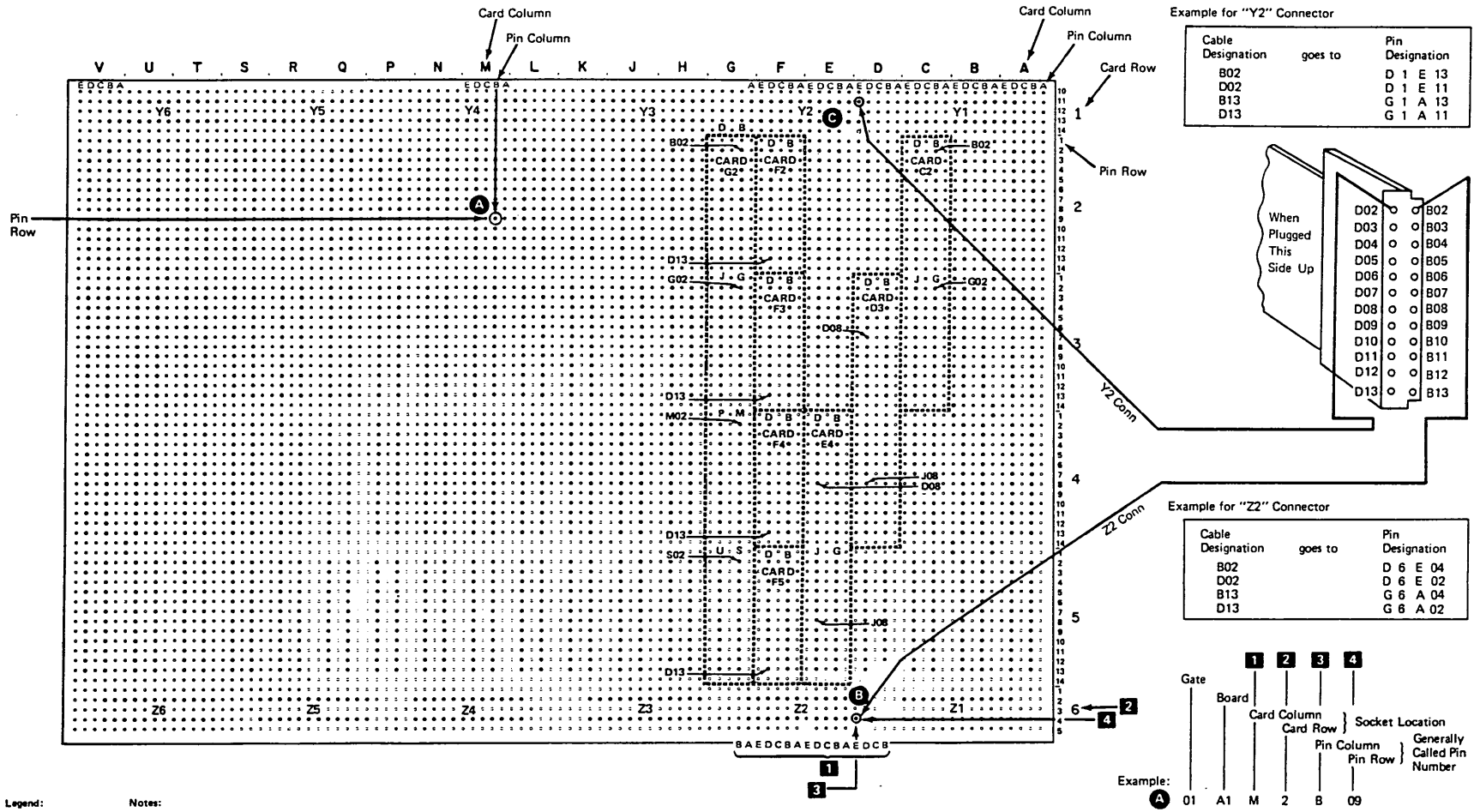

Figure A-1. Logic Board–Card, Connector, and Pin Locations

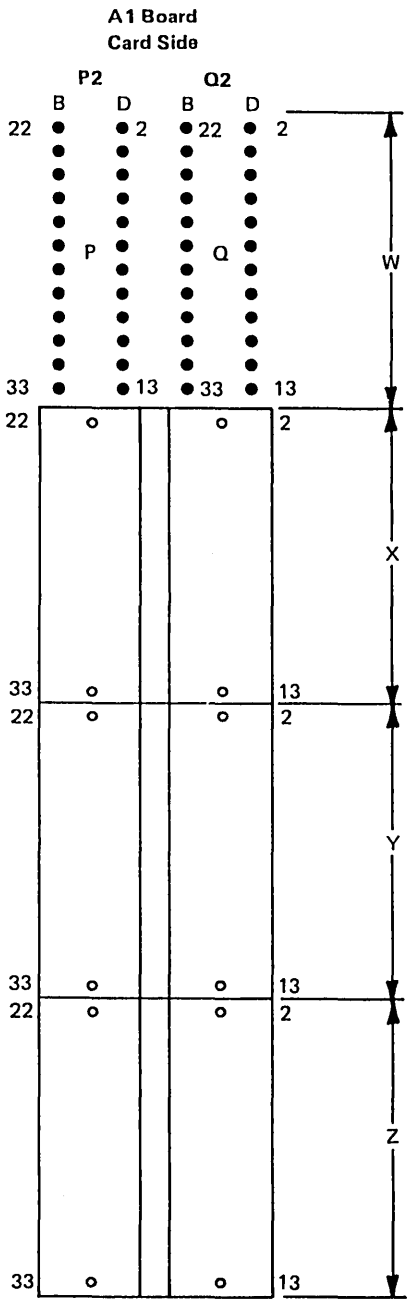

Figure A-2. Pin Locations–Top Card Connector

Top Card Connector PN 1794410 (1-Position)
Top Card Connector PN 5267787 (2-Position)

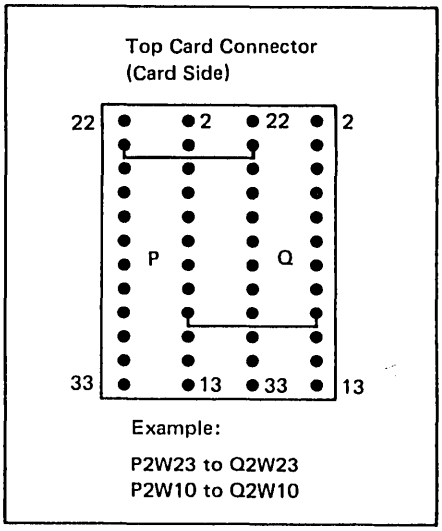

Note: *See Figure 5-25 for additional information.*

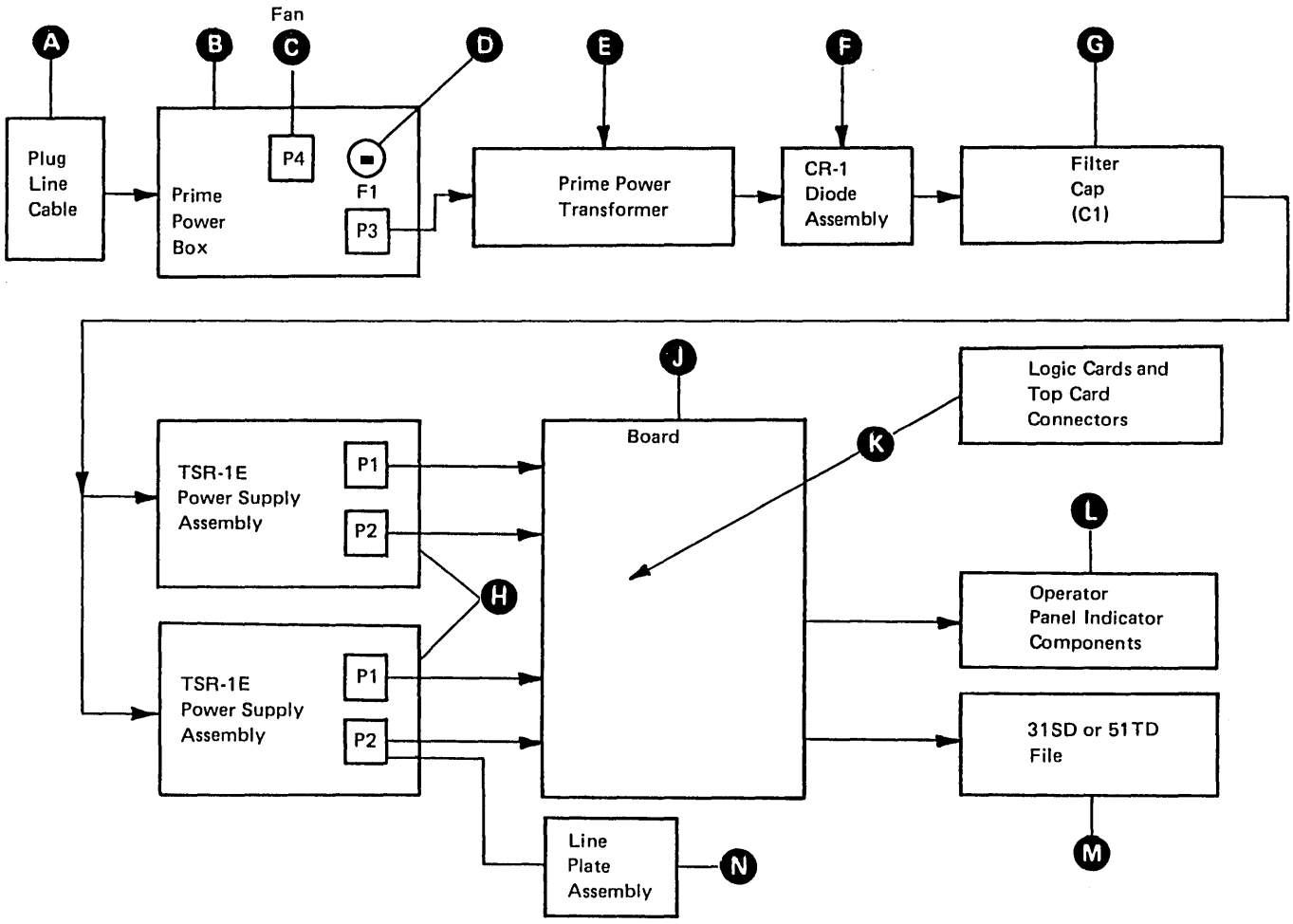

Figure A-3. Field Replaceable Units (FRUs)

	Part Name	Description	Part No.
A	Power Line Cable	See Parts Catalog, Appendix P	
B	Prime Power Box	U.S. and Canada	5267836
		World Trade	5267861
C	Fan	120V 50/60 Hz (one-fan version)	4176642
		200/230V 50/60 Hz (one-fan version)	6837984
		120V 50/60 Hz (two-fan version)	5699513
D	Fuse F1 3A 250V SB	Single Power Supply, Input 100-127V	5718367
	Fuse F1 2A 250V SB	Single Power Supply, Input 200-240V	1149561
	Fuse F1 5A 125V SB	Dual Power Supply, Input 100-127V	512137
E	Prime Power Transformer	60 Hz 120V (75W) Single Power	2625096
		60 Hz 120V (150W) Dual Power	2625097
		50/60 Hz 100V-240V WT Single TSR	1828818
		50/60 Hz 200V-240V WT Dual TSR	1828819
		50/60 Hz 100V-127V WT Dual TSR	1828817
F	CR-1	Input Power Diode Assembly	4429941
G	C1	Input Power Filter Cap	4430074
H	TSR1-E	Power Supply	5646070
J	Board	See Figure A-5 for part numbers	
K	V—Logic Cards	See Figure A-5 for part numbers	
	Top Card Connectors	1-Position	1794410
		2-Position	5267787
L	Operator Panel Card	DDS Adapter, X.21	5267726
	Operator Panel Card	Loop	5267758
	Operator Panel Card	IM 1200 bps — Nonswitched, EIA	5267726
	Operator Panel Card	IM 1200 bps — SW, Nonswitched SNBU (Dom)	5267978
	Operator Panel Card	IM 1200 bps — SW, Nonswitched SNBU (WT)	5267992
	Operator Panel Card	Line Speed (2400-, 4800-, 9600-bps IM)	5267993
	Operator Panel Switch S4	TALK/DATA with LED	5267866
	Operator Panel Switch S7	Line Speed (Loop)	5267867
	Operator Panel Switch S8	Line Speed (1200 IM)	5267868
	Operator Panel Switch S11	Local Comm	5267869
	Operator Panel Switch S13	Power On/Off with Cable	6814340
M	Disk Drive Assembly	100-127V 50 Hz	4240504 (31SD)
			4240512 (51TD)
	Disk Drive Assembly	200-240V 50 Hz	4240505 (31SD)
			4240513 (51TD)
	Disk Drive Assembly	100-127V 60 Hz	4240508 (31SD)
			4240516 (51TD)
	Disk Drive Assembly	200-240V 60 Hz	4240509 (31SD)
			4240517 (51TD)
	Disk Drive Motor	100-127V 50/60 Hz with Fan	4240677
	Disk Drive Motor	200-240V 50/60 Hz with Fan	4240679
	Disk Drive Capacitor	Motor Capacitor	4240681
	Disk Drive Belt	Drive Belt, 50 Hz	4240604
	Disk Drive Belt	Drive Belt, 60 Hz	4240605
N	Line Plate Assembly	Line Plate Assembly	2682397

Figure A-4. Field Replaceable Unit (FRU) Part Numbers

Note: *This page reflects the machine design as of March 1983 and is EC-controlled. An updated page may be attached to the front cover of this manual when the machine is shipped. Field-installed engineering changes involving card or board updates will include updated pages to be inserted in this manual.*

Card No. (See Note 1)	Card Function	Part No.	Part No.	Part No.	Part No.	Part No.
1	Control Storage 32	4448767	6016038	6016575	6124042	
2	Control Storage 64	4448766	6016037	6016573	6124038	
3	Control Storage 64R	4448765				
4 (Base)	Storage Feed Thru (4W)	8517087 (Note 2)				
4 (Above 64)	Storage Logic (4W)	1588090				
5 (Base)	Storage Feed Thru (2W)	8514516	Note 2			
5 (Above 64)	Storage Jumper (2W)	2411890	Note 2			
6 (Above 64)	Storage Jumper (2W)	2411890	Note 2			
7	Control Logic #1	2411872				
8	Control Logic #2	2411851				
9	Control Logic #3	6830741				
10	Diskette Adapter	5675144				
11	Response Time Monitor	4752212				
12	Type A Terminal Adapter	4409905	6835728	6835933	6016034	
12 (All)	Terminal Adapter (For use with machine type 3299 and/or equivalent)	4752335				
13	CCA (with clock)	8526485				
13	CCA (without clock)	8532016				
13	HPCA	8526518	5167241	6340976		
14	EIA (Note 3)	5864660	5864668			
14	DDS Adapter (Note 3)	8527032				
14	1200 bps IM (Dom switched) (Note 3)	8564508				
14	1200 bps IM (Nonswitched SNBU A/A) (Note 3)	8564509				
14	1200 bps IM (Nonswitched SNBU M/A) (Note 3)	8564510	6173448			
14	1200 bps IM (WT A/A) (Note 3)	8564479	5167246			
14	1200 bps IM (WT SNBU) A/A (Note 3)	8564480	5167247	6173438		
14	1200 bps IM (WT nonswitched) (Note 3)	8564481	5688021			
14	Loop Adapter (Note 3)	2399082	8548788			
14	X.21 Nonswitched (Note 3)	8564561	5864683			
14	X.21 Switched (Note 3)	8562296	5687968	5864683		
14	V.35	4939893				
15-F2	4800 bps IM Receiver	8276864				
15-F2	9600 bps IM Receiver	2682448	8276996			
16-D2	9600 bps IM Receiver Ext	2682414				
17-D2	2400 bps IM Processor	1734673	5892781	6056271	6056846	
17-D2	4800 bps IM Processor	1734676	5892782	6056269	6056847	
17-E2	9600 bps IM Processor Mod 1	8276992	5892777	6056264	6056822	6056849
17-E2	9600 bps IM Processor Mod 2	8276993	6056267	6056826	6056897	
18-C2	Extended Diagnostic Feature	1734633	6056905			
19-B4	PROM (Note 5)					
20-G2	2400 bps Front End	2682389	6056868			
20-G2	4800 bps Front End	1734680	2682457	6056791		
20-G2	9600 bps Front End	1734629	6056835			
21	Encrypt/Decrypt (Note 4)	4402182	8501248			
22	File Control (31 SD)	4240724				
22	File Control (51 TD)	4240726				
24	Type B Terminal Adapter #1	1590633				
25	Type B Terminal Adapter #2	1590645	6062710			
26	Type B Terminal Adapter #3	1588121	8715738			
27	Type B Terminal Adapter #4	8524590				
28	Driver/Receiver Type A (0-7)	5699968				
29	Not Used					
30	Driver/Receiver Type B (0-3)	1590617				
31	Not Used					
32	CCA Interface Jumper	5667044 (Note 6) 5667094 (Note 7)				
32	HPCA Interface Jumper	5667043 (Note 6) 5667093 (Note 7)				
33	Line Plate	1734234	2682397			

Board Types

Model	Function	Part No.	EC	EC	EC	EC
51C	Base-replaces PN 5643329	6226635		874273		
51C	With or without Type B Adapter	5699828		876269	862637	862635
51C	With 2400-, 4800-, or 9600-bps Integrated Modem Feature	5643329	788931	867313	874273	
52C	Kanji/Chinese (WT)	5643330	788928	876270	876288	867281

Notes:

1. *To convert the card number to a board/card socket location, see foldout Figure A-12 or Figure 1-7.*
2. *It is possible to plug this card in backwards. To ensure correct plugging, see Figure A-11.*
3. *Jumper or switch adjustment required. See Appendix C for adjustment.*
4. *Removal of this card will destroy the Master Encrypt/Decrypt key. See paragraph 6.1.3.*
5. *PROM card installed for integrated modem (used for engineering changes).*
6. *PN located on card.*
7. *Assembly PN. Use for ordering replacement.*

Figure A-5. Card and Board Part Number Selection

IBM 3274

Form No. GA23-0114-1

Configuration Data Card (Configuration Support: D)

Number	Meaning
001 _____	Keyboard Validation
011 _____	Patch Request
021 _____	Printer Authorization Matrix
022 _____	(See reverse side)
031 _____	Number of RPQ diskettes
032 _____	Request RPQ Parameter List
111 _____	Number of Category B Terminals
112 _____	Number of Category A Terminals
113 _____	Extended Function Store
114 _____	Personal Computer Attachment
115 _____	Entry Assist
116 _____	Individual Port Assignment
117 _____	Port Assignment Specification Table
118 _____	Port Address Table
121 _____	Keyboard Language
125 _____	Miscellaneous Feature Options
127 _____	RTM Definition
128 _____	RTM Boundaries and Interface
139 _____	Keypad Selection
141 _____	Magnetic Character Set
151 _____	3274 Model Designation
160 _____	Extended Data Stream
161 _____	Color Convergence
165 _____	Decompression
166 _____	Attribute Select Keyboard
170 _____	Distributed Function Terminals
173 _____	3290 Options
175 _____	Password
176 _____	BSC Enhanced Communication Option
201 _____	Control Unit Address
213 _____	Between Bracket Printer Sharing
215 _____	Physical Unit ID
220 _____	Alert
301 _____	BSC Control Unit Number
302 _____	SDLC Control Unit Address
305 _____	BSC Printer Polling
310 _____	Modem Connection
311 _____	Modem Wrap
313 _____	NRZI/NRZ – Internal/External Clocking
314 _____	Multipoint/Point to Point
317 _____	Switched Network Backup
318 _____	Normal/Half Speed

Number	Meaning
331 _____	BSC/SDLC
342 _____	RTS Control
343 _____	Communication Interface
345 _____	Answer Tone
347 _____	High-Speed Data Rate
351 _____	HPCA/CCA
352 _____	Encrypt/Decrypt
360 _____	X.21 Switched Retry
361 _____	X.21 Switched Retry Timing
362 _____	X.21 Switched Options

CE Data

201 Local Channel CU Address _____

Master Terminal Operator Phone _____

Host CPU _____

Application Program _____

Remote TP Line	BSC	SDLC
Logical Line No.	_____	_____
Logical LU ID	_____	_____
Line Speed	_____	_____
Host	_____	_____
Application	_____	_____
Diskette No.	_____	_____

©IBM Corp. 1983 Printed in U.S.A.

Figure A-6. Configuration and CE Data Card (Stored in Customer Access Door, Front Pocket)

Printer Authorization Matrix

Printer Port Address	Mode	Class				Source Device List							
A A	M	X	X	X	X	Y	Y	Y	Y	Y	Y	Y	Y
		70 71 72 73	74 75 76 77	78 79 80 81	82 83 84 85	0 1 2 3	4 5 6 7	8 9 10 11	12 13 14 15	16 17 18 19	20 21 22 23	24 25 26 27	28 29 30 31
– –	–	–	–	–	–	–	–	–	–	–	–	–	–
– –	–	–	–	–	–	–	–	–	–	–	–	–	–
– –	–	–	–	–	–	–	–	–	–	–	–	–	–
– –	–	–	–	–	–	–	–	–	–	–	–	–	–
– –	–	–	–	–	–	–	–	–	–	–	–	–	–
– –	–	–	–	–	–	–	–	–	–	–	–	–	–
– –	–	–	–	–	–	–	–	–	–	–	–	–	–
– –	–	–	–	–	–	–	–	–	–	–	–	–	–
– –	–	–	–	–	–	–	–	–	–	–	–	–	–
– –	–	–	–	–	–	–	–	–	–	–	–	–	–

IBM

0 = System
1 = Local
2 = Shared

Figure A-7. Printer Authorization Matrix

Test lead on ground: DOWN light comes on.
Test lead on +5V dc: UP light comes on.
Test lead on no pin: neither light comes on.

Note: *Even a signal of very short duration causes the associated light to come on enough to be seen.*

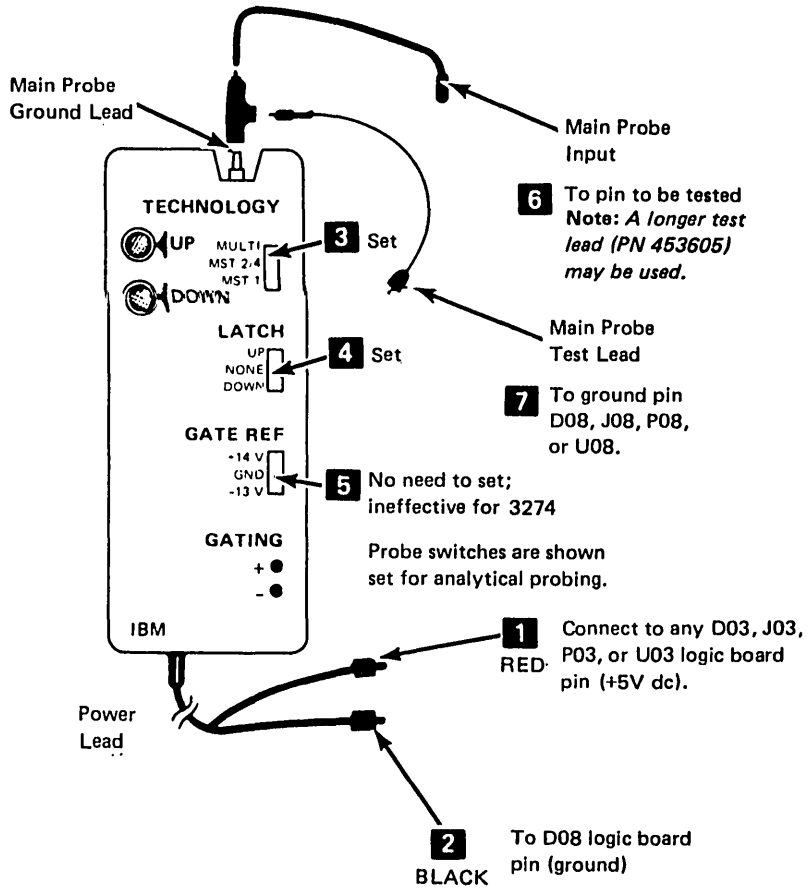

Figure A-8. General Logic Probe (PN 453212)

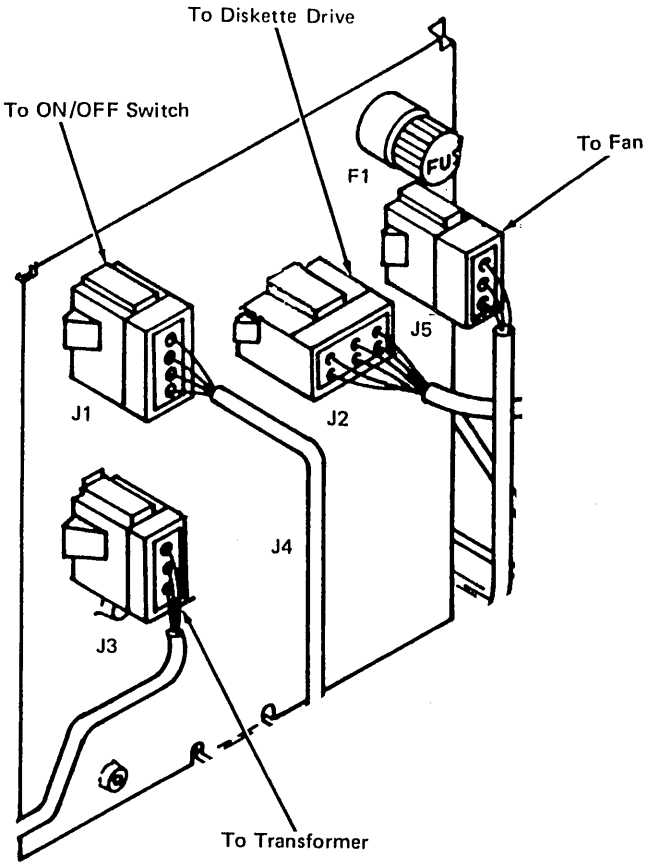

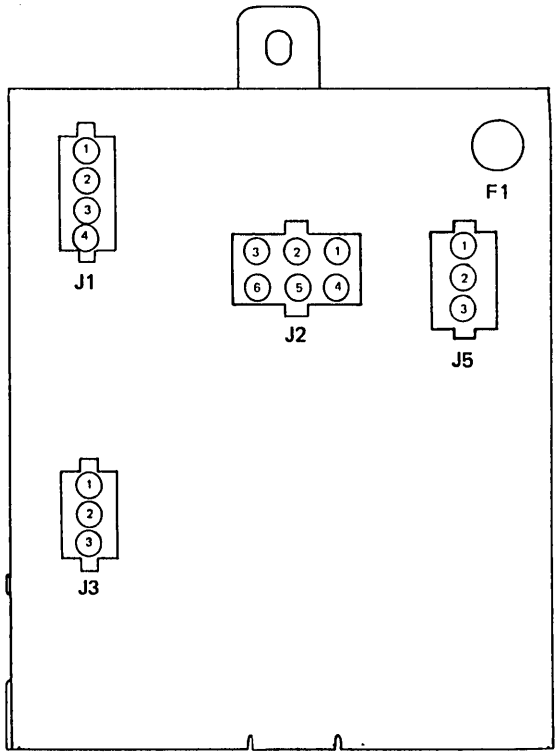

U.S. and Canada

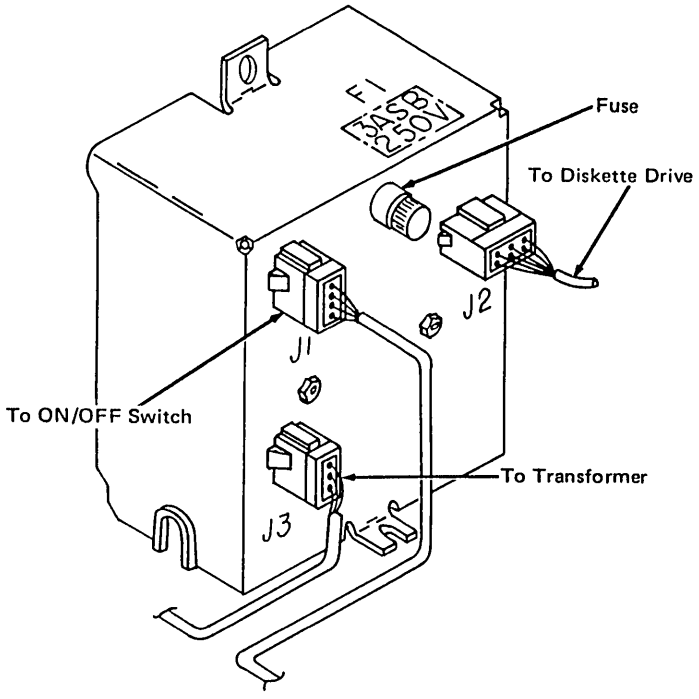

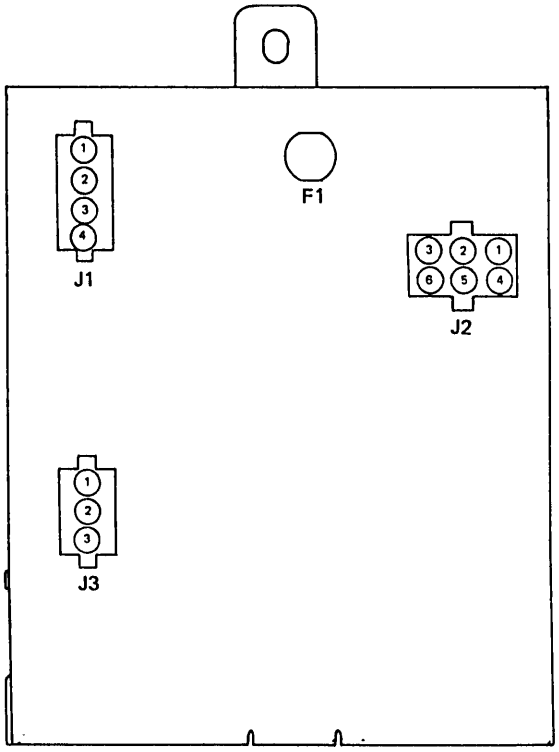

World Trade Countries

Figure A-9. Prime Power Box Locations

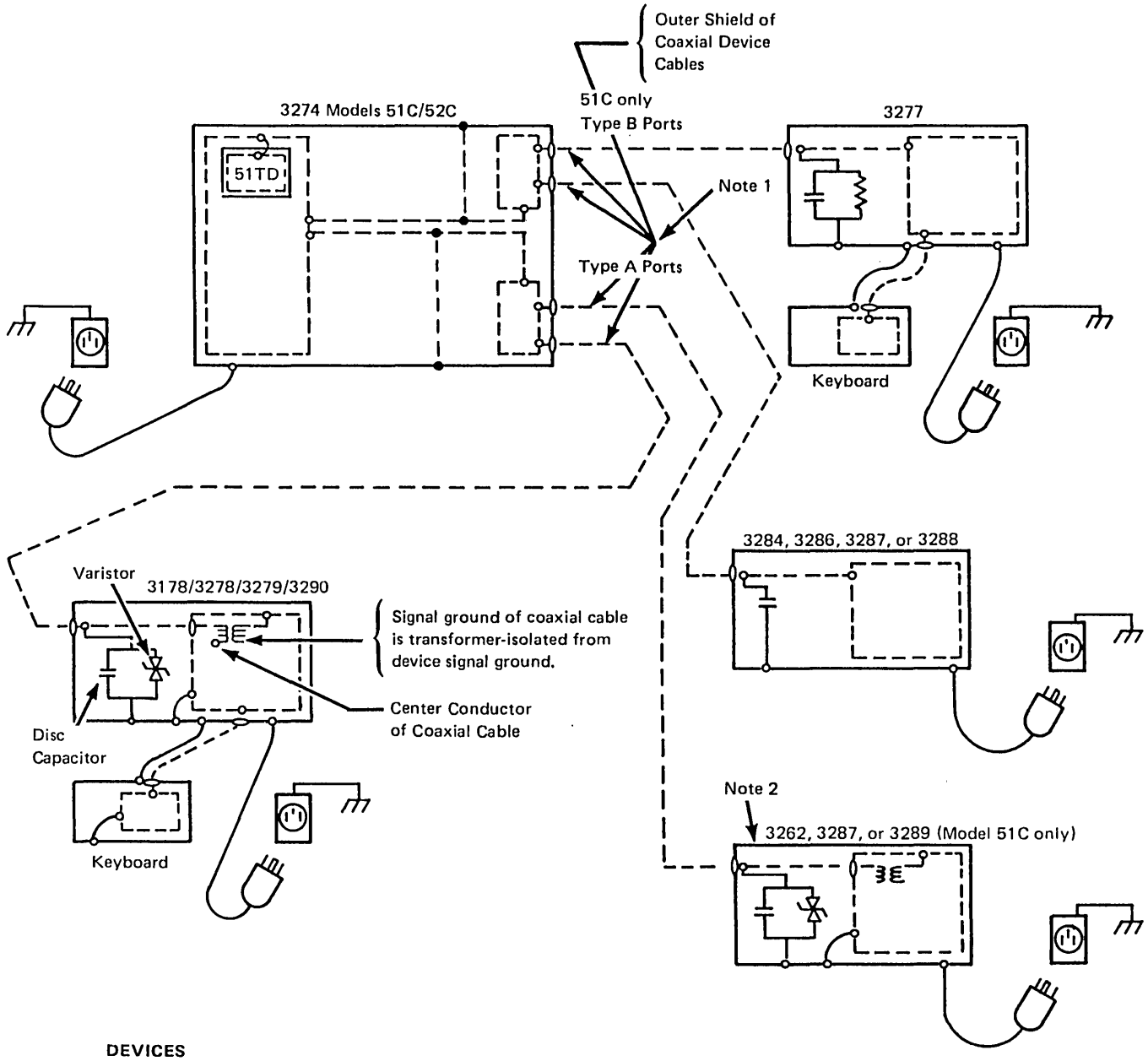

DEVICES

Resistance between outer shield of coaxial and frame of 3274, with device cable removed from 3274.	
Device	**Resistance (Ohms)**
3277	7K to 10K
3178, 3278, 3279, 3290	Infinite
3284	Infinite
3286	Infinite
3287, 3262	7 to 10K or Infinite (see Note 2)
3288	Infinite
3289	Infinite

Frame Ground (AC Ground)

Signal Ground (DC Ground)

Building Ground (Green Wire)

Not a connection

Notes:

1. *Signal ground is connected to frame ground at the Type A and Type B I/O Coaxial Port panels. It is recommended that signal and frame ground* not *be connected together in the modem.*
2. *In some 3262 and 3287 Printers, a 10K resistor is used in place of the capacitor/varistor network.*
3. *To isolate a coaxial cable problem, see Chapter 2, Step 5d for coaxial cable dc resistance test.*

Figure A-10. 3274 Models 51C and 52C Grounding

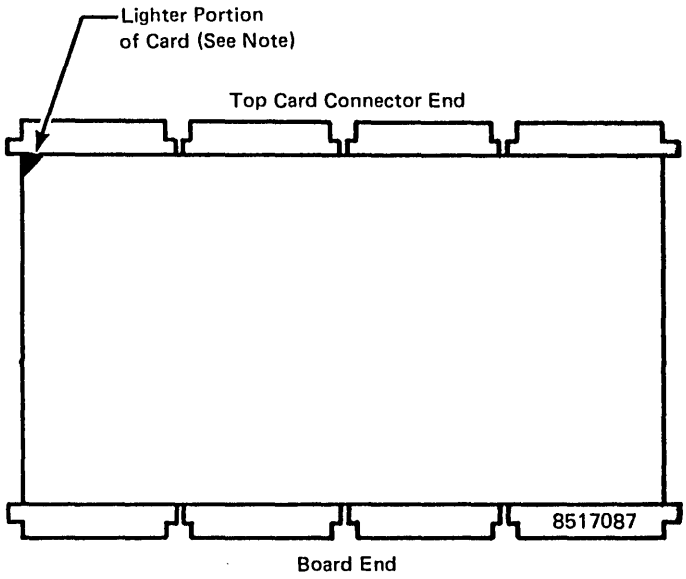

Card 8517087

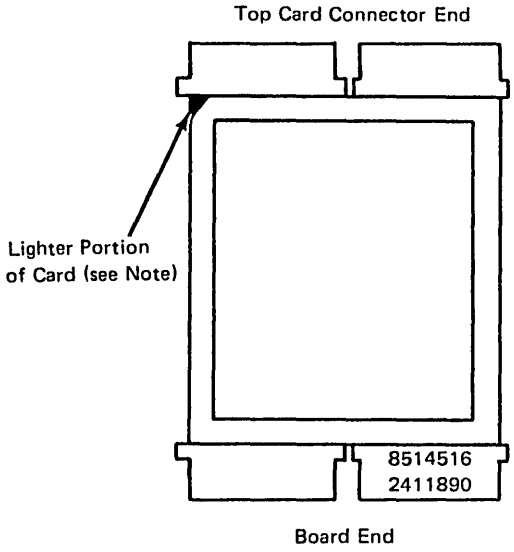

Cards 8514516 No. 5 and 2411890 Nos. 5 and 6

Note: *To identify the top card connector end, locate the lighter portion of the card.*

Figure A-11. Card Plugging Cautions

Model 51C with/without Type B Adapter

Storage	Location							
	Volume							
			01	01	00			
	V2	U2	T2	S2	R2	Q2	Q4	P2
64 Base					64R	**		**
96 Ext Funct Store (3630)				32	64R	*	*	*
128 Ext Funct Store (3632) (1800)***				64	64R	*	*	*
128 Ext Funct Store (3630) (3631)			32	32	64R	*	*	*
192 Ext Funct Store (3632) (3650) or (1800) (3650)		64		64	64R	*	*	*
192 Ext Funct Store (3631) (3650)		64	32	32	64R	*	*	*

Card Type	Card Number
32	1
64	2
64R	3

*Storage Expansion (1802) Storage Jumper cards and Storage Logic card required for above 64K.

**Base Storage Feed Thru cards are required for 64K.

***1802 is not required with 1800.

Model 52C (Kanji)	Location									
Storage	Volume									
	03	03	03	03	02	01	00			
	V2	U2	T2	S2	R2	Q2	P2	N2	N4	M2
256 Base			64	64		64	64R	*	*	*
384 Cont Storage Expan (2879)	64	64	64	64		64	64R	*	*	*

*Storage Expansion (1802) Storage Jumper cards and Storage Logic card required for above 64K.

A. Control Storage Card Locations

A-12 (Part 1 of 2). Card Locations

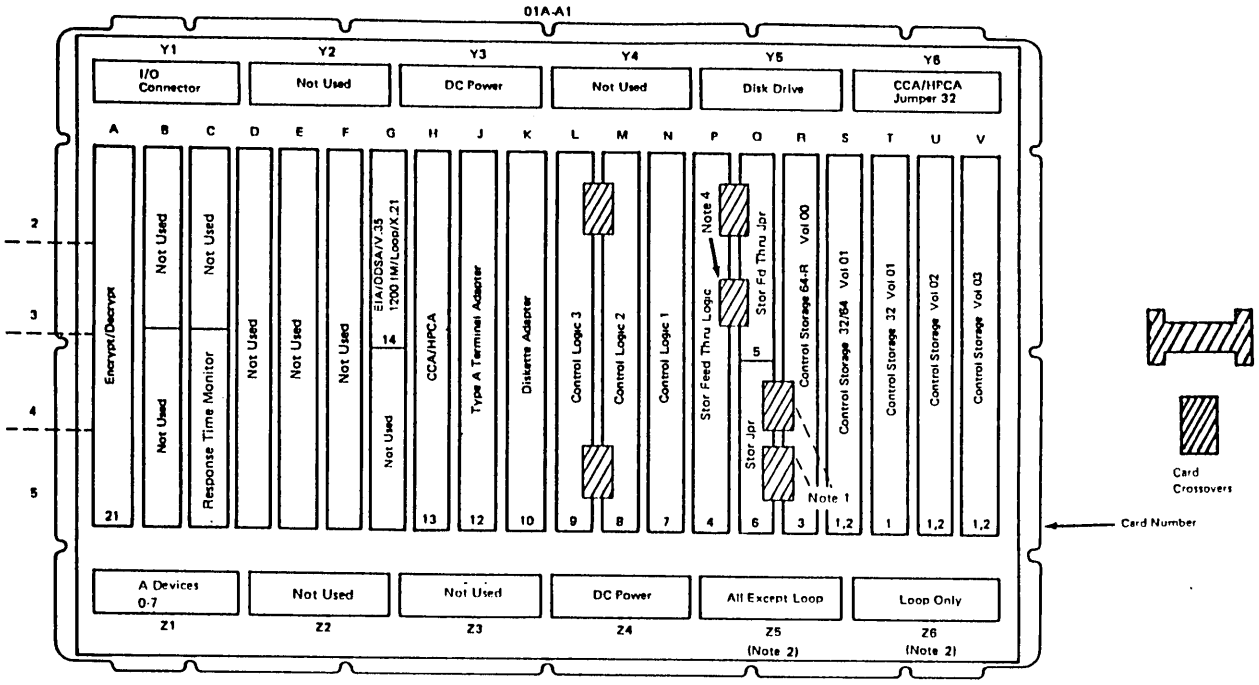

Notes:

1. *Not present when control is equal to 64K.*
2. *Cable is in Z5 or Z6 depending upon interface installed.*
3. *Type A Driver/Receiver Card No. 28 located behind the I/O coaxial panel.*
4. *Top card connector (position X) not required when storage equal to 64K. Your machine may already have connector installed.*

E. 01A-A1 Board – Model 51C (Without 2400-, 4800-, and 9600-bps Integrated Modem), Part Number 5643329 or 6226635

Figure A-12 (Part 2 of 2). Card Locations

Card Number	Card Function	51C with/ without Type B Adapter	52C Kanji/ Chinese
1	Control Storage 32 (Note 1)	Note 1	Note 1
2	Control Storage 64 (Note 1)	Note 1	Note 1
3	Control Storage 64-R (Note 1)	Note 1	Note 1
4	Storage Feed Thru (4W) or Storage Logic (4W) (Note 2)	01A-P2	01A-M2
5	Storage Feed Thru (2W) or Storage Jumper (Note 2)	01A-Q2	01A-N2
6	Storage Jumper Control Storage Exp Jumper (Note 2)	01A-Q4	01A-N4
7	Control Logic 1	01A-N2	01A-L2
8	Control Logic 2	01A-M2	01A-K2
9	Control Logic 3	01A-L2	01A-J2
10	Diskette Adapter	01A-K2 (Note 6)	01A-F2
11	Response Time Monitor w/wo Type-B Board	01A-B4	----------
11	Response Time Monitor w/wo 24, 48, 96 IM Board	01A-C4	----------
12	Type A Terminal Adapter	01A-J2	01A-D2
13	CCA/HPCA	01A-H2	01A-H2
14	EIA/DDSA/1200 I.M./Loop, X.21/V.35 (Note 3)	01A-G2	01A-G2
15	2400- 4800-bps IM Receiver	01A-F2	----------
16	9600-bps IM Receiver Ext.	01A-D2	----------
17	2400-, 4800-bps IM Processor	01A-D2	----------
17	9600-bps IM Processor	01A-E2	----------
18	2400-, 4800-, 9600-bps TAC (Note 3)	01A-C2	----------
19	2400-, 4800-, 9600-bps PROM	01A-C4	----------
20	2400-, 4800-, 9600-bps IM Front End	01A-G2	----------
21	Encrypt/Decrypt (See Note 4)	01A-A2	----------
22	File Control (Located in the diskette drive)	01A-K	01A-K
23	Not Used	----------	----------
24	Type B Terminal Adapter 1	01A-D2	----------
25	Type B Terminal Adapter 2	01A-C2	----------
26	Type B Terminal Adapter 3	01A-F2	----------
27	Type B Terminal Adapter 4	01A-E2	----------
28	Type A Driver/Receiver (Note 5)	01S-A1	01S-A1
29	Not Used	----------	----------
30	Type B Driver/Receiver	01A-B2	----------
31	Not Used	----------	----------
32	CCA/HPCA Interface Jumper	01A-Y6	01A-Y6

Notes:

1. *For card locations, see "A. Control Storage Card Locations" (left).*
2. *With some part numbers it is possible to plug card in backwards. To ensure correct plugging position, see Figure A-11.*
3. *Jumper or switch setting required (see Appendix C).*
4. *Card removal destroys the master key (see paragraph 6.1.3).*
5. *Located behind the I/O coaxial panel.*
6. *Jumper should not be plugged on this card. This jumper is for manufacturing test purposes only.*

D. Card Location Chart

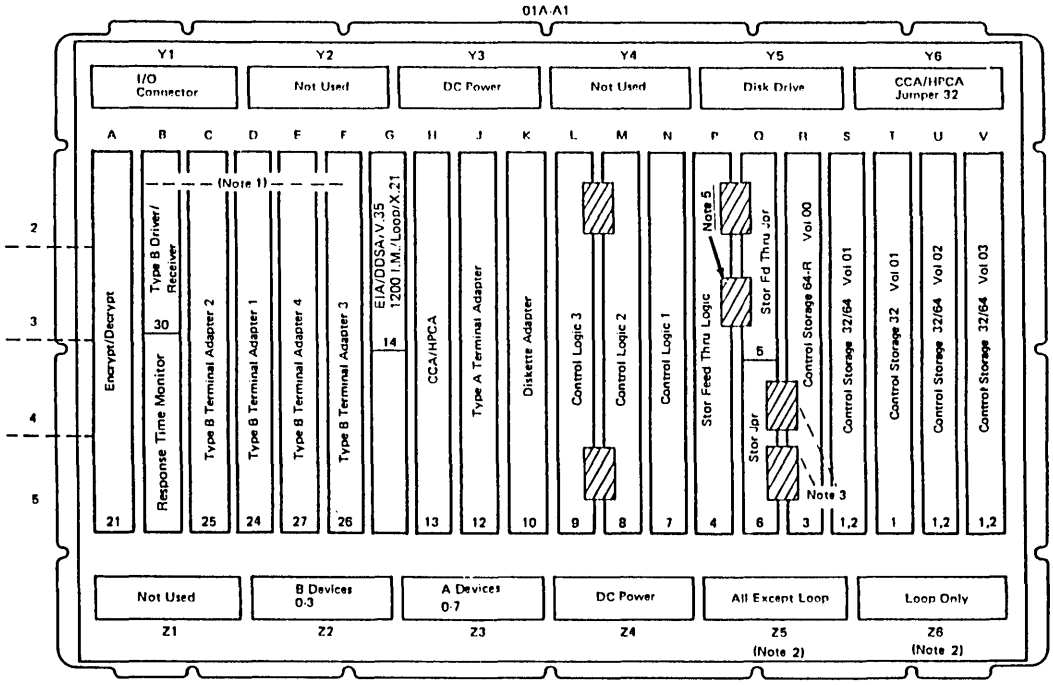

Notes:

1. *Category B device adapter cards.*
2. *Cable is in Z5 or Z6 depending upon interface installed.*
3. *Not present when control is equal to 64K.*
4. *Type A Driver/Receiver Card No. 28 located behind the I/O coaxial panel.*
5. ***Top card connector (position X) not required when storage equal to 64K. Your machine may already have connector installed.***

B. 01A-A1 Board–Model 51C (with/without Category B Devices)

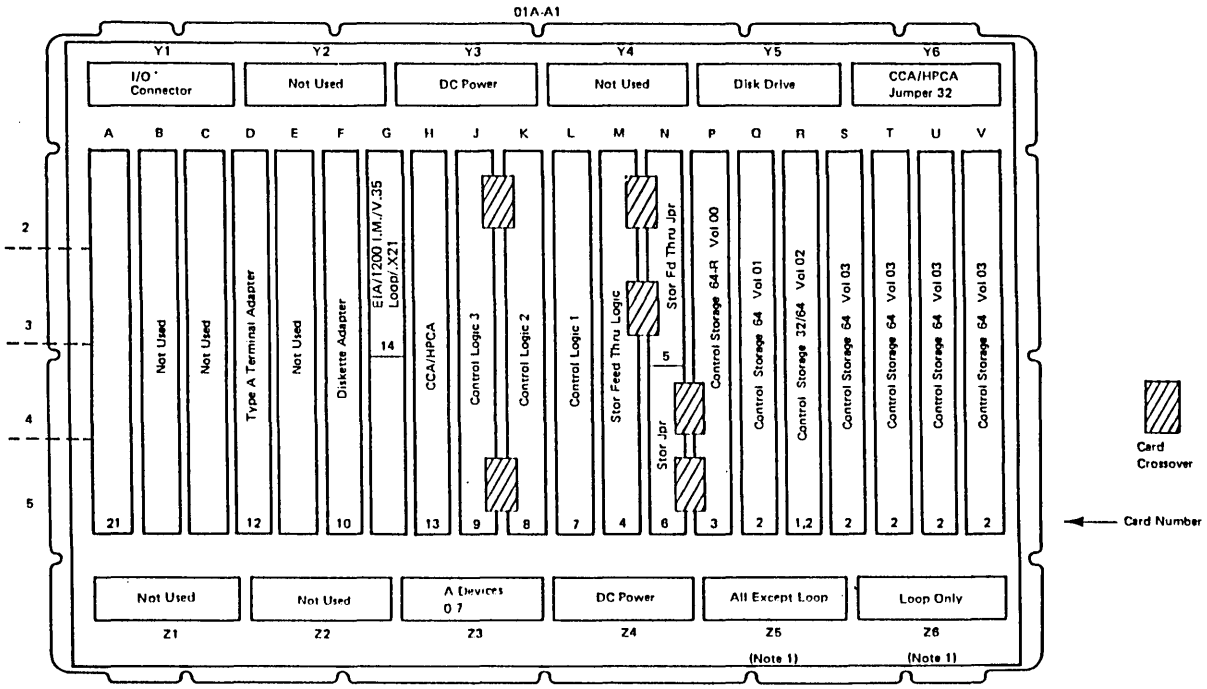

Notes:

1. *Cable is in Z5 or Z6 depending upon interface installed.*
2. *Type A Driver/Receiver Card No. 28 located behind the I/O coaxial panel.*

C. 01A-A1 Board–Model 52C (Kanji/Chinese), Part Number 5643330

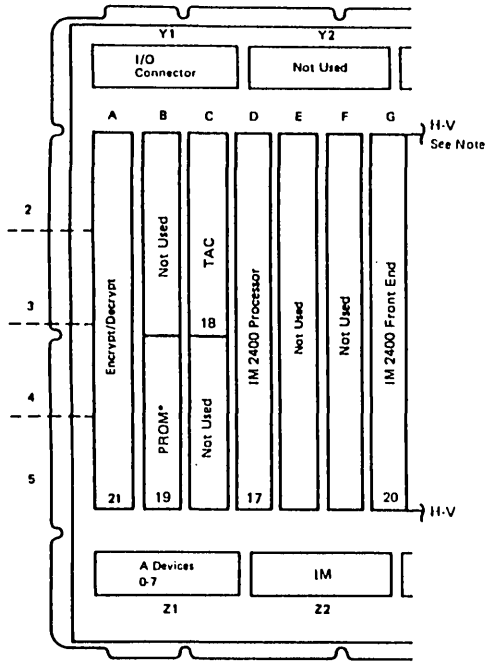

Model 51C with IM 2400

*If installed

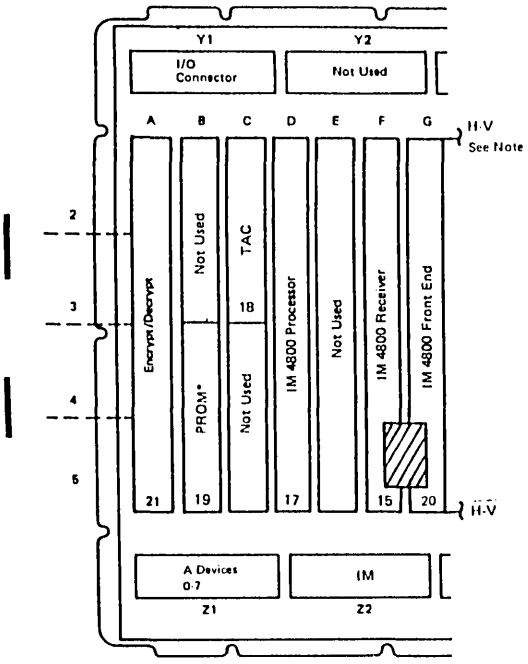

Model 51C with IM 4800

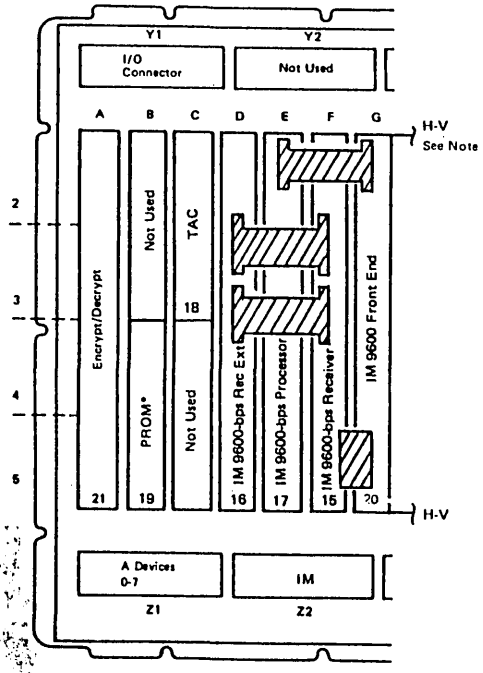

Model 51C with IM 9600

Note: *Sockets H-V same as "E 01A-A1 Board" (left).*

E. 01A-A1 Board — Model 51C (With 2400-, 4800-, and 9600-bps Integrated Modem)

Appendix B. Power Supplies

This appendix provides power supply and voltage distribution diagrams.

Contents

Figure B-1. Prime Power and Input (Single/Dual Supply) B-2
Figure B-2. Single Power Supply System B-3
Figure B-3. Dual Power Supply System (2 Parts) B-4
Figure B-4. Power Supply Distribution, Flow Diagram B-6
Figure B-5. Board Voltage Distribution B-7
Figure B-6. Transformer Input and Fan Voltage Wiring (World Trade) (2 Parts) B-8

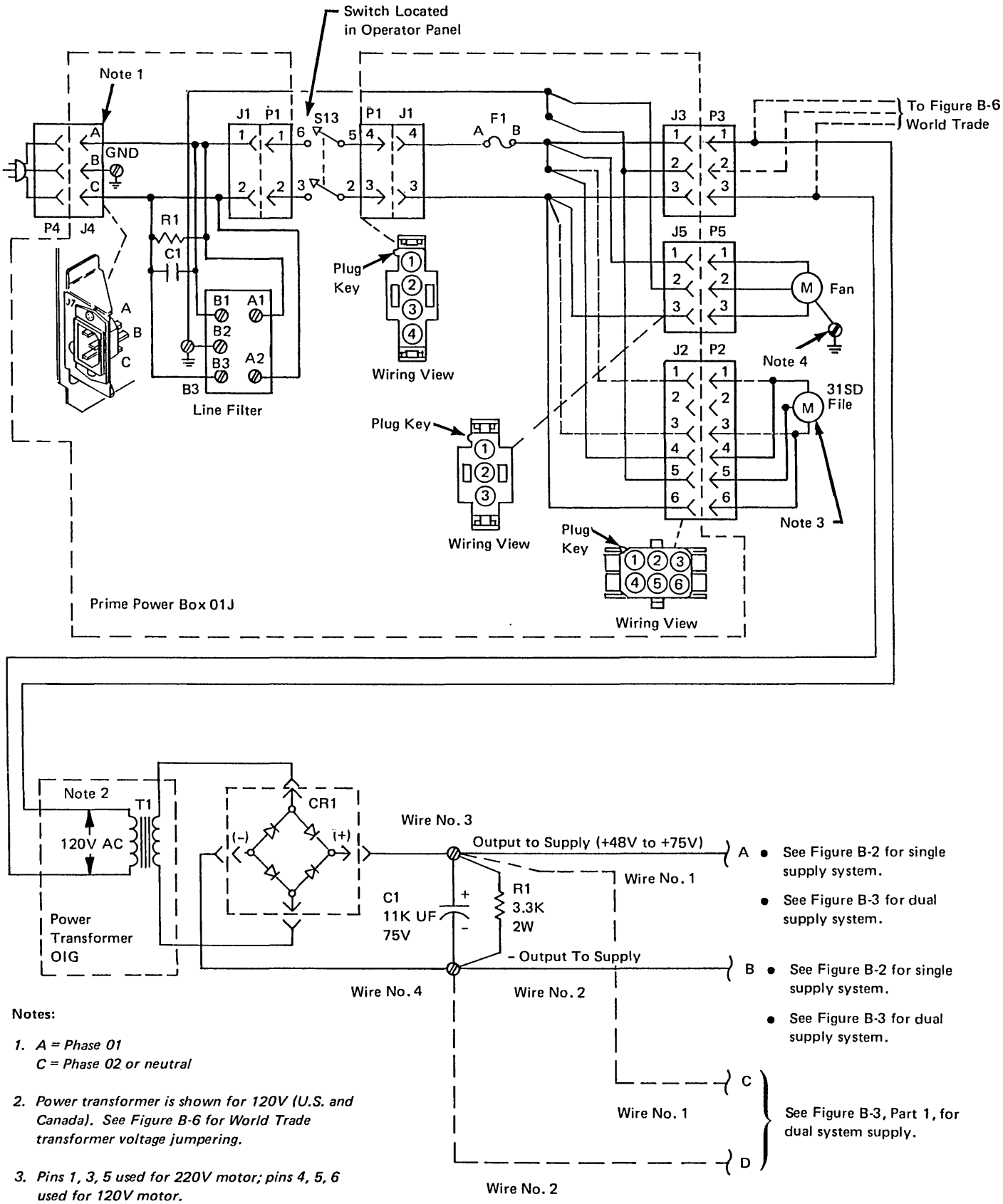

Notes:

1. *A = Phase 01*
   C = Phase 02 or neutral
2. *Power transformer is shown for 120V (U.S. and Canada). See Figure B-6 for World Trade transformer voltage jumpering.*
3. *Pins 1, 3, 5 used for 220V motor; pins 4, 5, 6 used for 120V motor.*
4. *Fan ground wire exists with metal housing fan.*

Figure B-1. Prime Power and Input (Single/Dual Supply)

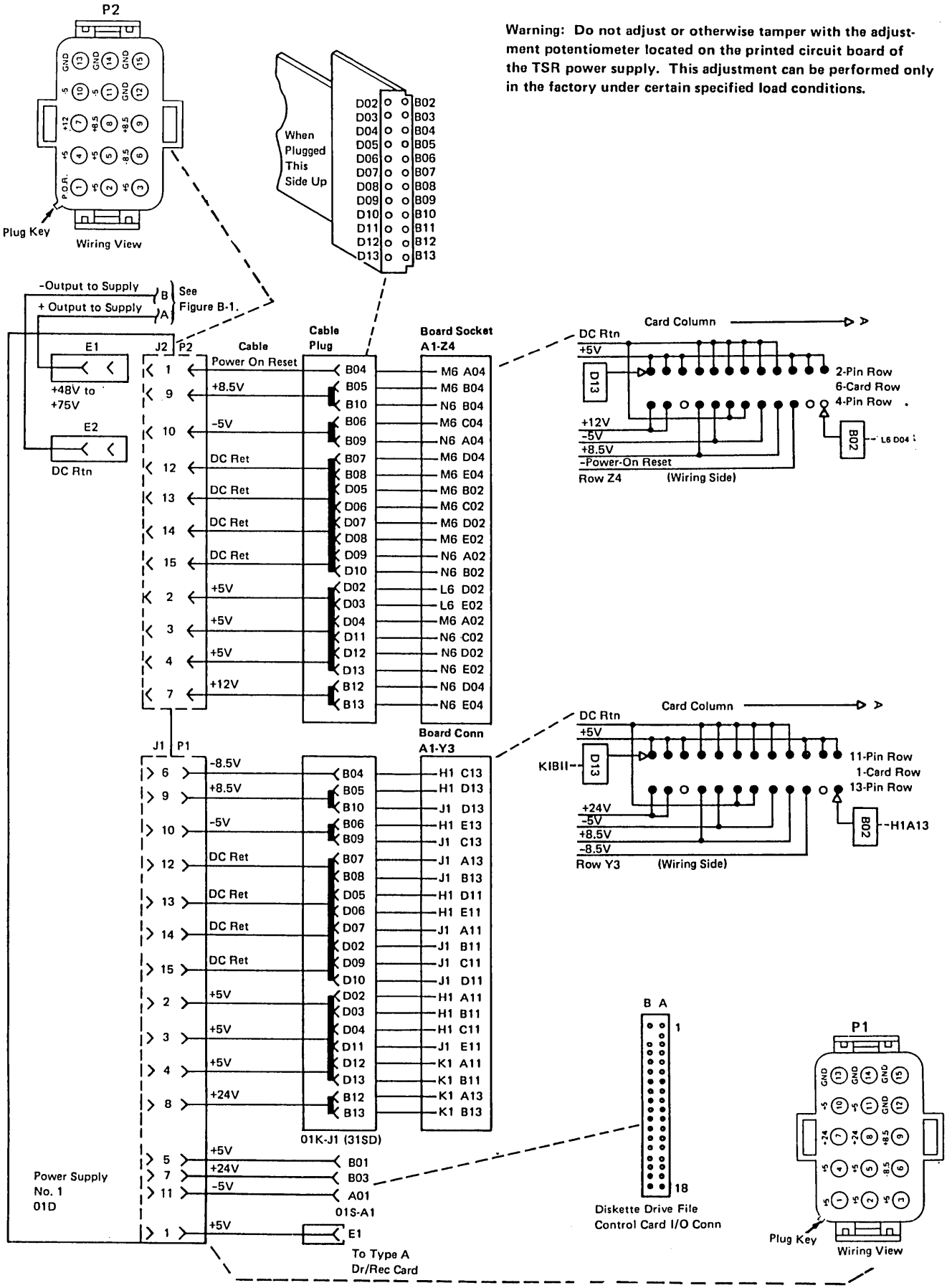

Figure B-2. Single Power Supply System

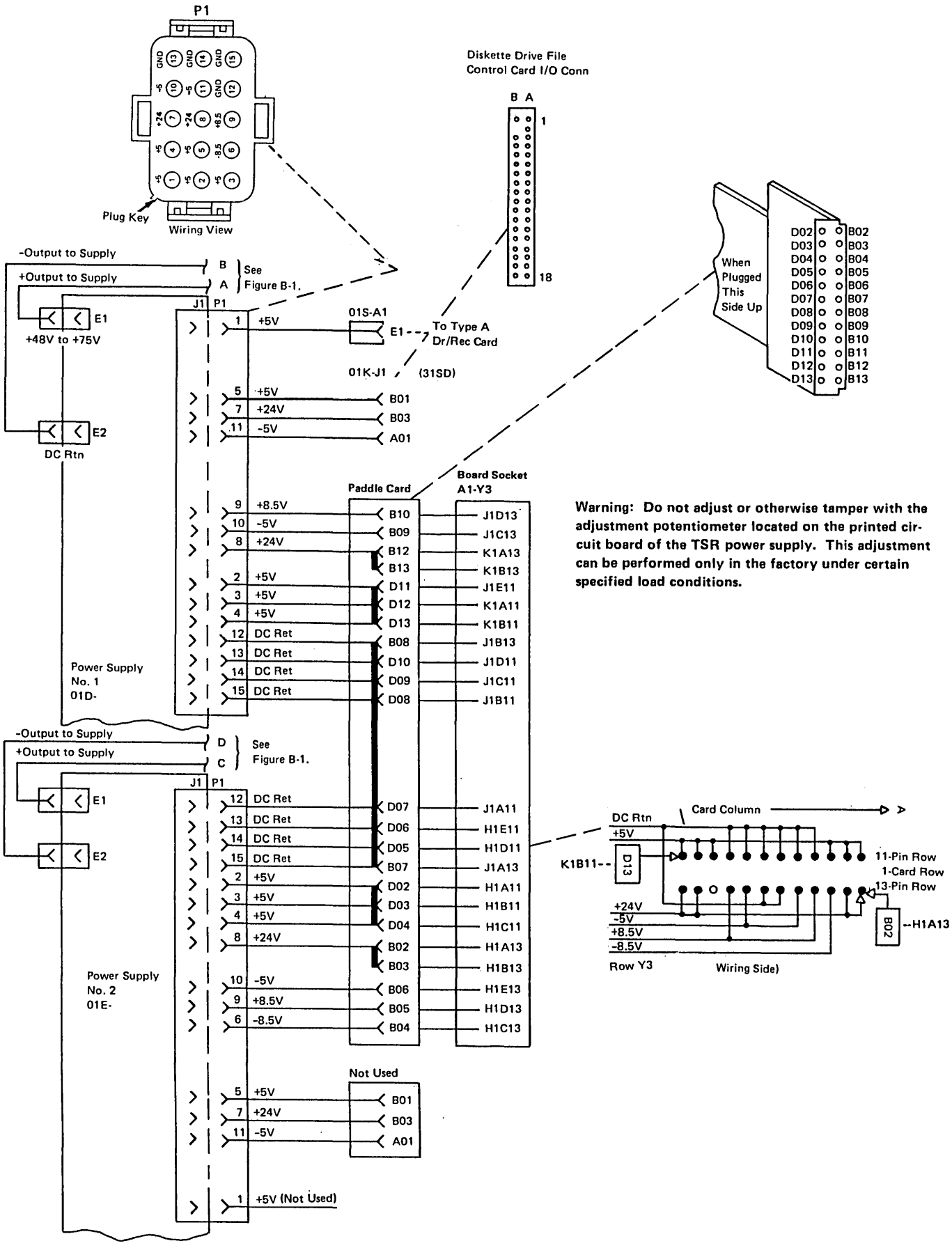

Figure B-3 (Part 1 of 2). Dual Power Supply System

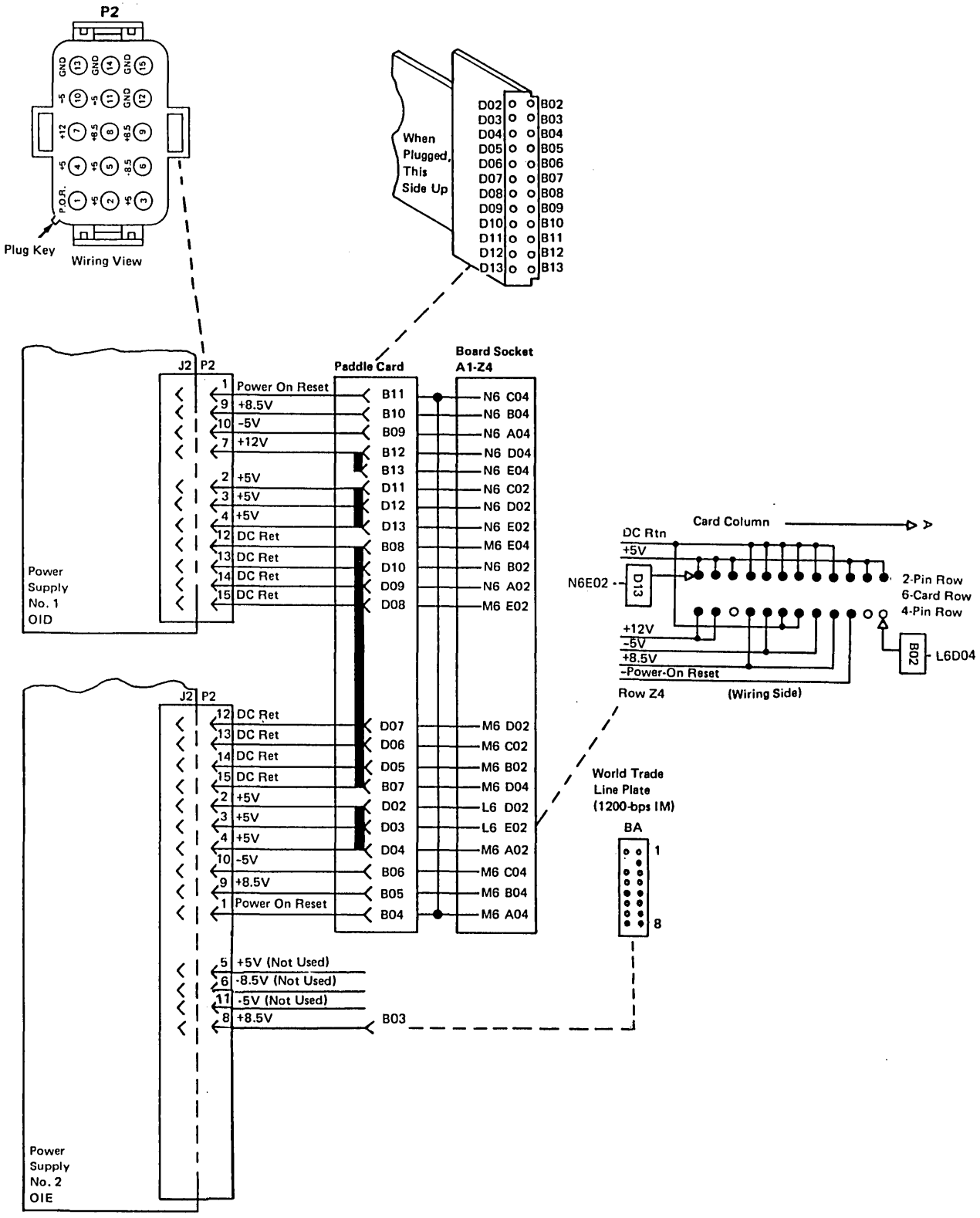

Figure B-3 (Part 2 of 2). Dual Power Supply System

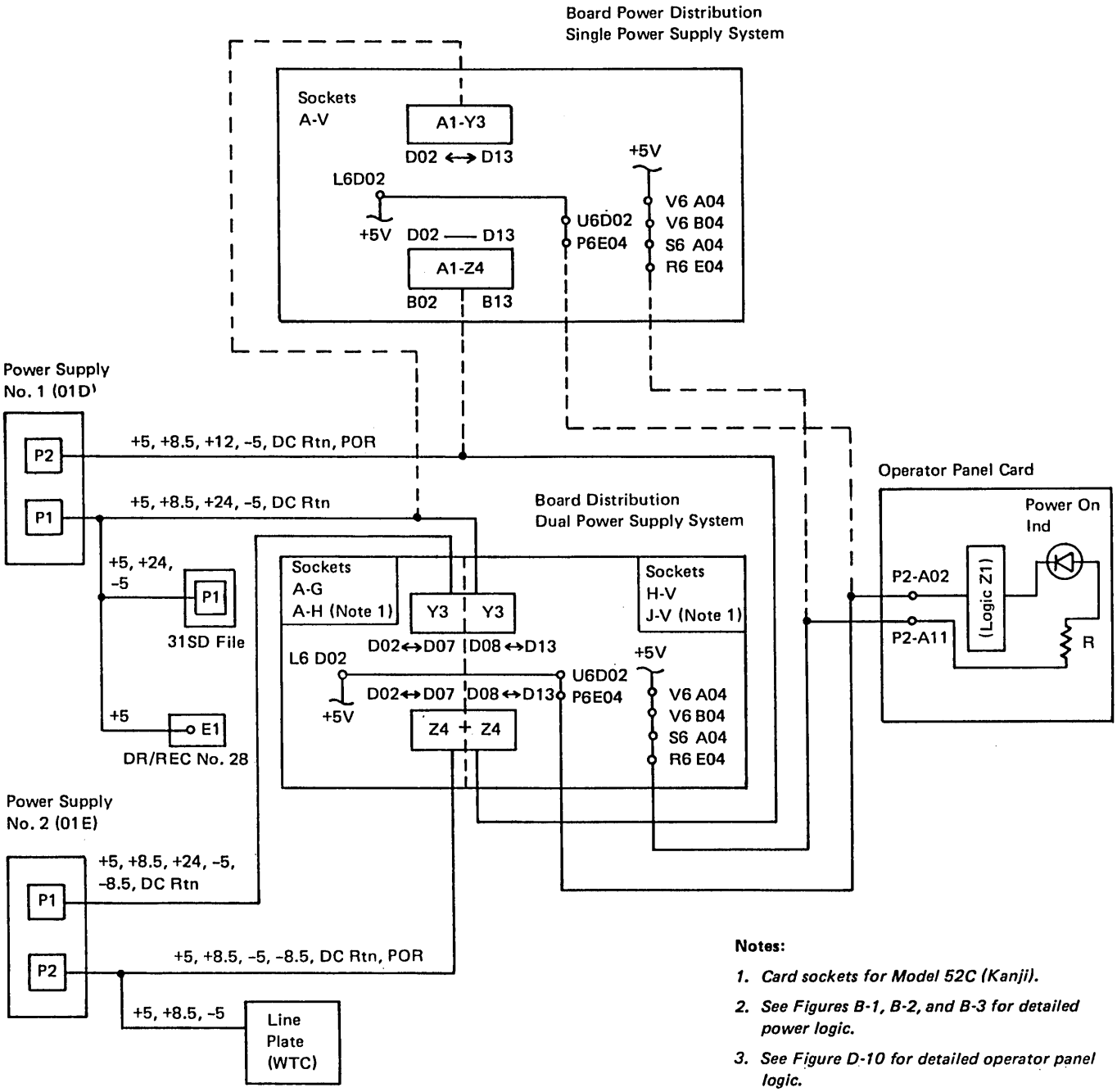

Notes:

1. *Card sockets for Model 52C (Kanji).*
2. *See Figures B-1, B-2, and B-3 for detailed power logic.*
3. *See Figure D-10 for detailed operator panel logic.*

Figure B-4. Power Supply Distribution, Flow Diagram

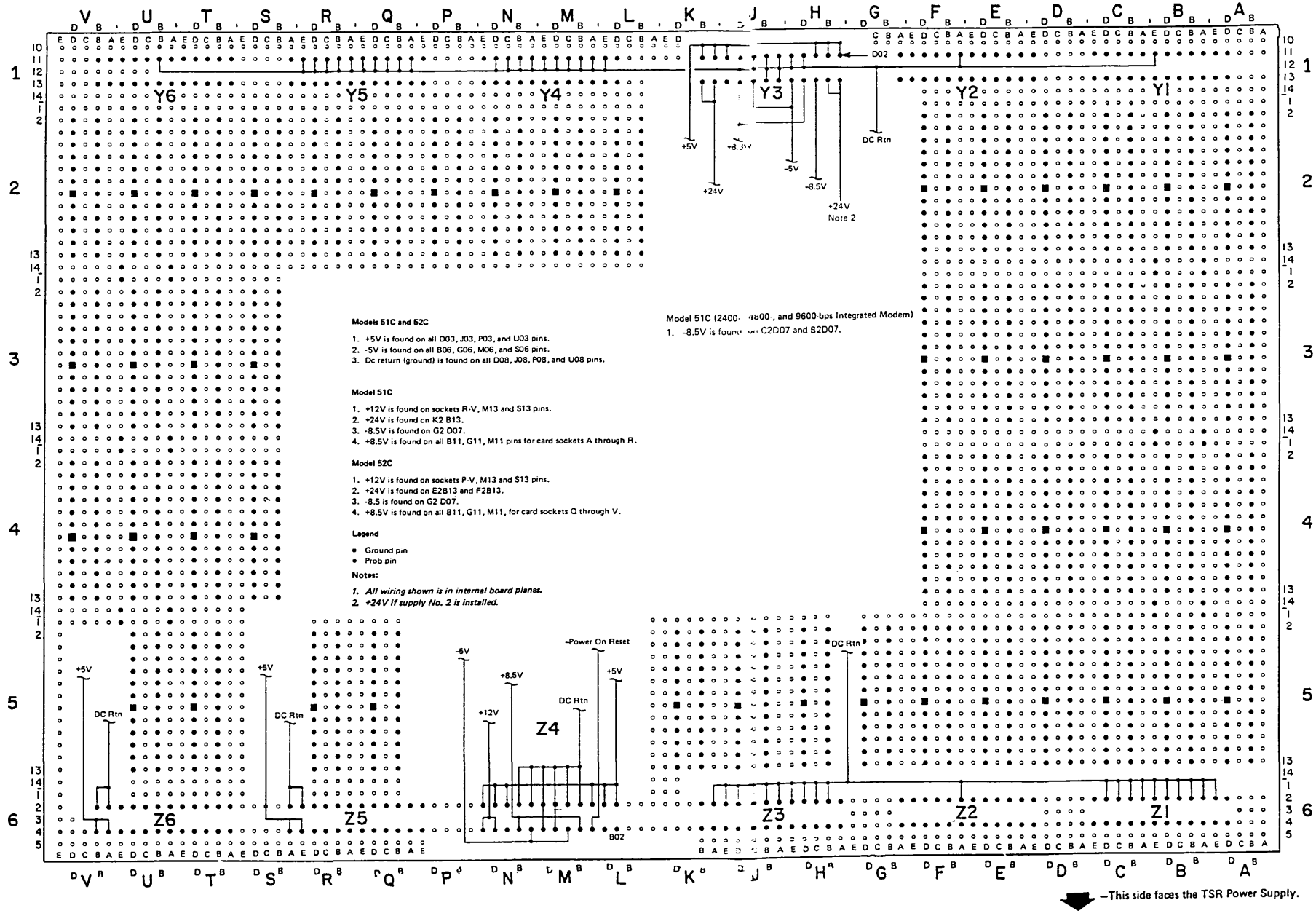

Figure B-5. Board Voltage Distribution

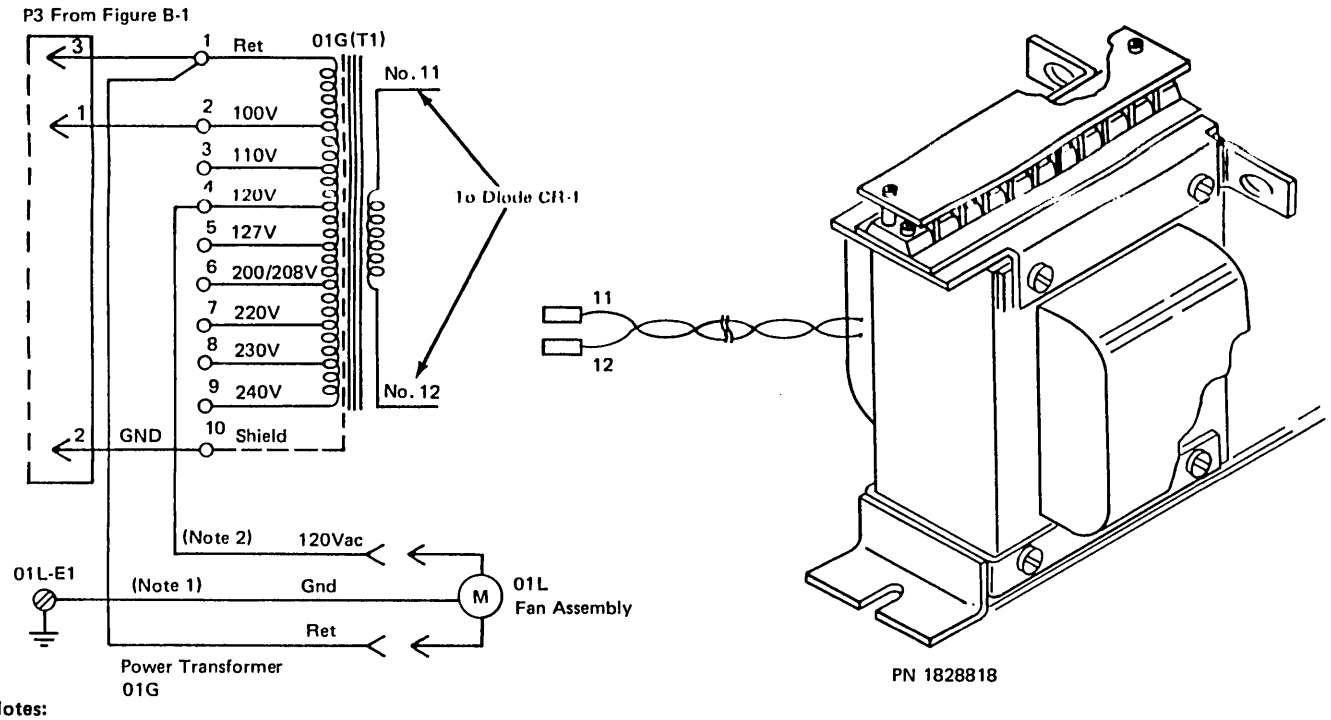

Notes:

1. *Fan ground wire exists only with metal-housing fan.*
2. *Fan always connects to 01G(T1) – 1 & 4 (120V) for all values of line voltage.*

100V–240V Single TSR Machine (World Trade)

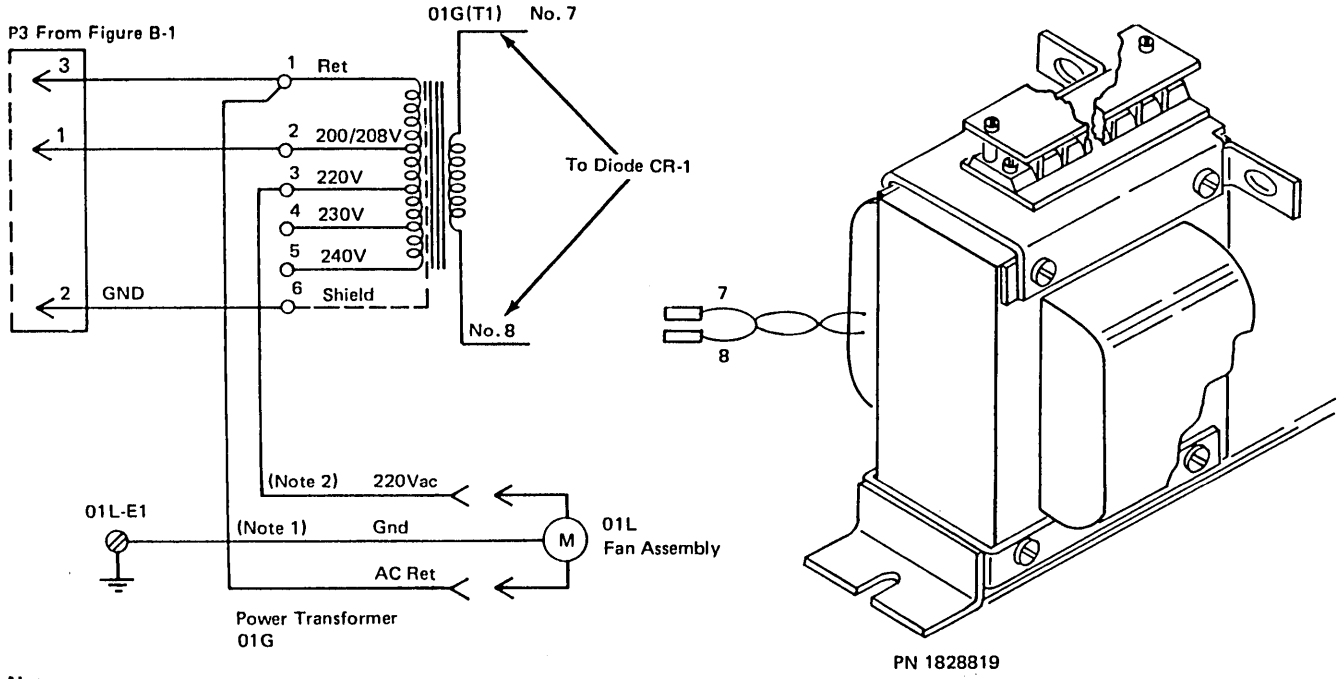

Notes:

1. *Fan ground wire exists only with metal-housing fan.*
2. *Fan always connects to 01G(T1) – 1 & 3 (220V) for all values of line voltage.*

200–240V Dual TSR Machine (World Trade)

Figure B-6 (Part 1 of 2). Transformer Input and Fan Voltage Wiring (World Trade)

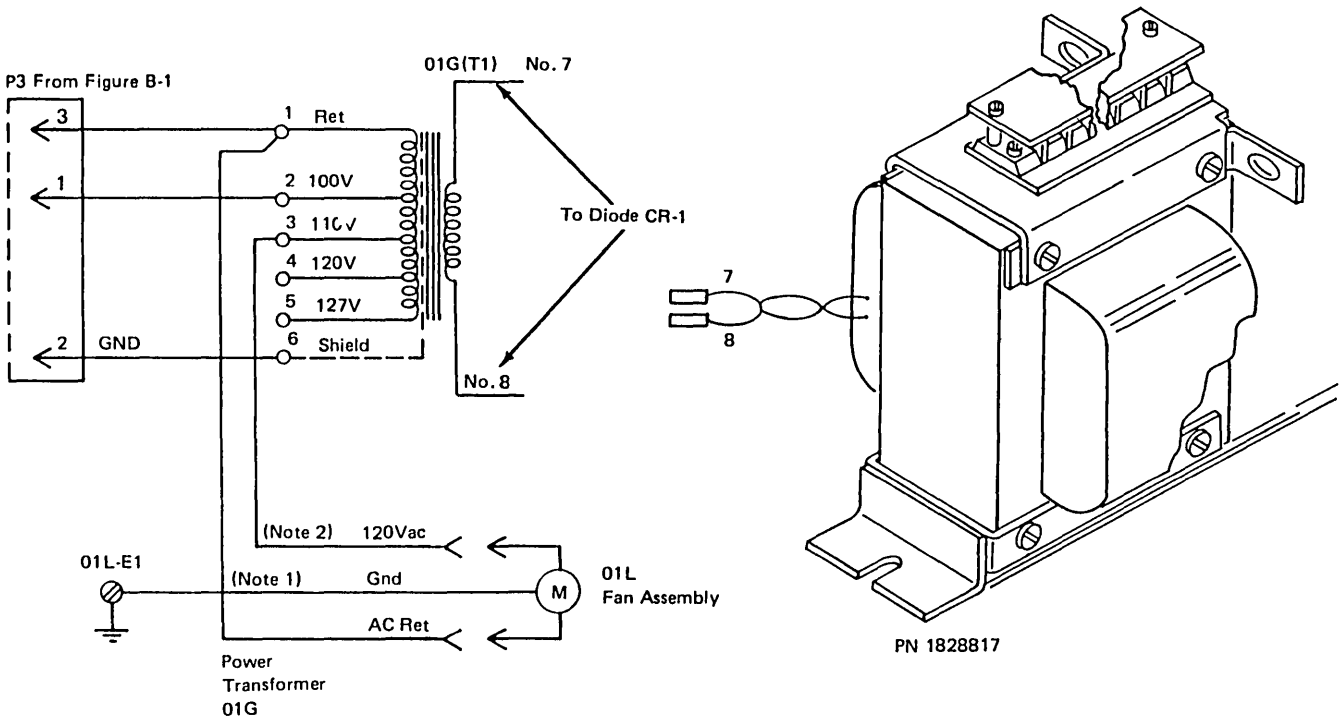

Notes:

1. *Fan ground wire exists only with metal-housing fan.*
2. *Fan always connects to 01G(T1) – 1 & 4 (120V) for all values of line voltage.*

100–127V Dual TSR Machine (World Trade)

Figure B-6 (Part 2 of 2). Transformer Input and Fan Voltage Wiring (World Trade)

Appendix C. Connector, Board, and Card Locations

This appendix provides diagrams for card switch settings, card jumpering, and cables. It calls out in paragraph C.2 the diagrams that should be referred to when host attachment problems occur.

C.1. Contents

Figure C-1. 1200-bps Integrated Modem Card (No. 14), N-Sw and N-Sw-SNBU, U.S. and Canada C-2
Figure C-2. 1200-bps Integrated Modem Card (No. 14), N-Sw and N-Sw-SNBU-AA, U.S. and Canada C-3
Figure C-3. 1200-bps Integrated Modem Card (No. 14), SW-AA/MA, U.S. and Canada C-4
Figure C-4. 1200-bps Integrated Modem Card (No. 14), N-Sw, WT except Canada C-4
Figure C-5. 1200-bps Integrated Modem Card (No. 14), N-Sw-SNBU-AA, WT except Canada C-5
Figure C-6. 1200-bps Integrated Modem Card (No. 14), Sw-AA, WT except Canada C-6
Figure C-7. WTC 1200-bps Integrated Modem Transmit Level Settings (Card No. 14) C-6
Figure C-8. Line Plate Current Adjustment Procedure, WT except Canada C-7
Figure C-9. Line Plate Automatic Adjustment C-8
Figure C-10. Loop Card Jumpering (Card No. 14) (PN 2399082 and 8548788) C-8
Figure C-11. EIA/CCITT Card Jumpering (Card No. 14) (PN 5864660, 5864668) C-8
Figure C-12. DDS Adapter Card Jumpering (Card No. 14), U.S. and Canada Only C-9
Figure C-13. Type A Adapter Coaxial Panel Card and Cable (2 Parts) C-10
Figure C-14. Cable from the 01A-A1 Board to Diskette Drive File Control Card C-12
Figure C-15. X.21 Nonswitched Adapter Card Jumpering C-13
Figure C-16. X.21 Switched or Nonswitched Adapter Card Jumpering C-13
Figure C-17. V.35 Card No. 14 Jumpering C-13
Figure C-18. Cable – Type B Coaxial Panel to A1 Board C-14
Figure C-19. Loop Station Connector (LSC) C-15

C.2 Host Attachment – Jumpers, Wiring, and Adjustments

Host attachment problems may result if the following are not jumpered, wired, or adjusted correctly:

1. Integrated Modem 1200 bps
   - 1200-bps Card: switches, potentiometer (U.S. and Canada). See Figures C-1 through C-6.
   - Operator Panel: switches. See Figures D-1 through D-6.
   - Board Wiring (U.S. and Canada): Nonswitched two-wire – G2G02 to G2G09, G2J05 to G2J13.
   - Line Plate (World Trade): Jumpering. See Figure C-8.
2. EIA/CCITT
   - Card: No jumpers required. See Figure C-11.
3. DDS Adapter
   - Card: Jumpers. See Figure C-12.
   - Operator Panel: Switches. See Figure D-1.
5. X.21 Switched and Nonswitched (leased)
   - Card: Jumpers.
   - Card: For jumpering, see Figures C-15 and C-16.
6. Encrypt/Decrypt
   - Removal of card A1A2 or battery when power is off destroys the master key (see paragraph 6.1.3).
7. V.35
   - Card: Jumpers. See Figure C-17.

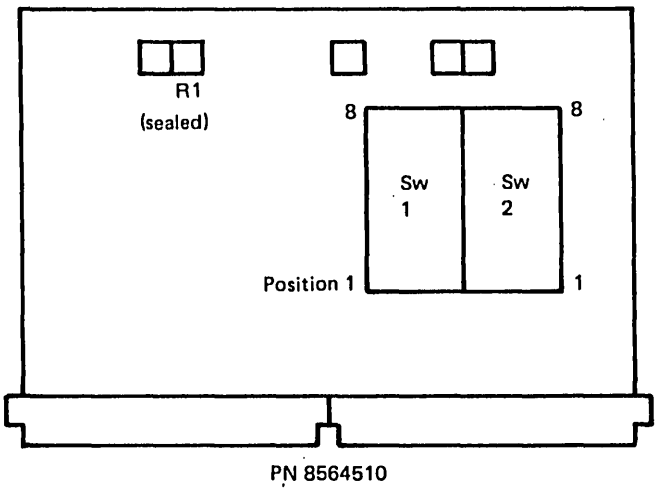

Sw Position		N-Sw		N-Sw SNBU-MA		Description	
		2-Wire	4-Wire	2-Wire	4-Wire		
	8	–	–	–	–	Not used	
	7	–	–	–	–	CS delay	
Sw 1	6	–	On	–	On	CS delay	
	5	–	–	–	–	Not used	
	4	–	On	–	On	Echo clamp	
	3	–	On	–	On	4-wire	
	2	On	–	On	–	2-wire	
	1	–	–	–	–	Xmit level -low	
Sw 2	8	–	–	–	–	0 dBm 1 -1 dBm 2	Sw line transmit level (Note 1)
	7	–	–	–	–	-2 dBm 3 -3 dBm 4	
	6	–	–	–	–	-4 dBm 5 -5 dBm 6	
	5	–	–	–	–	-6 dBm 1,7 -7 dBm 2,7	
	4	–	–	–	–	-8 dBm 3,7 -9 dBm 4,7	
	3	–	–	–	–	-10 dBm 5,7 -11 dBm 6,7	
	2	–	–	–	–	-12 dBm 1,8 -13 dBm 2,8	
	1	On (Note 3)	On (Note 3)	On (Note 3)	On (Note 3)	-14 dBm 3,8 -15 dBm 4,8	
		0 dBm	0 dBm	0 dBm	0 dBm	R1 (Potentiometer) Non-switched line xmit level (Note 2)	

Notes:

1. *Switched line transmit level switches (S2) are factory-preset to 0 dBm (1 on).*
2. *Nonswitched line transmit level (R1) is factory-preset to 0 dBm.*
3. *"On" indicates switch-on position; all others are off.*

Figure C-1. 1200-bps Integrated Modem Card (No. 14), N-Sw and N-Sw-SNBU, U.S. and Canada

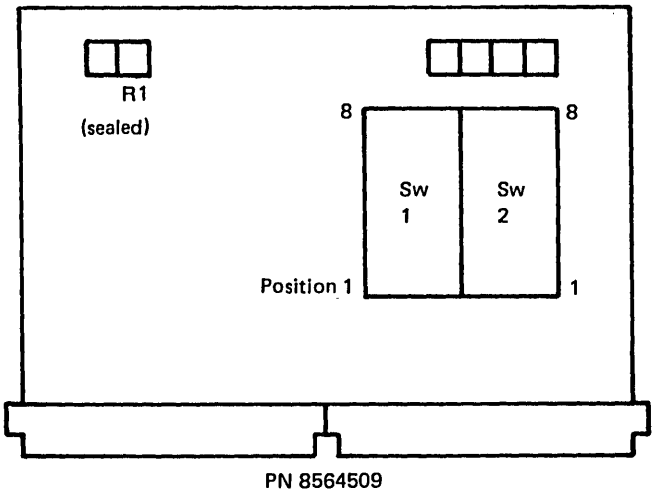

Sw Position		N-Sw SNBU-AA 2-Wire	N-Sw SNBU-AA 4-Wire	Description	
Sw 1	8	–	–	Not used	
	7	–	On	CS delay	
	6	–	On	CS delay	
	5	–	–	Card Test	
	4	–	On	Echo clamp	
	3	–	On	4-wire	
	2	On	–	2-wire	
	1	–	–	Xmit level -low	
Sw 2	8	–	–	0 dBm 1 -1 dBm 2	Sw line transmit level (Note 1)
	7	–	–	-2 dBm 3 -3 dBm 4	
	6	–	–	-4 dBm 5 -5 dBm 6	
	5	–	–	-6 dBm 1,7 -7 dBm 2,7	
	4	–	–	-8 dBm 3,7 -9 dBm 4,7	
	3	–	–	-10 dBm 5,7 -11 dBm 6,7	
	2	–	–	-12 dBm 1,8 -13 dBm 2,8	
	1	On (Note 3)	On (Note 3)	-14 dBm 3,8 -15 dBm 4,8	
		0 dBm	0 dBm	R1 (Potentiometer) Nonswitched line xmit level (Note 2)	

Notes:

1. *Switched line transmit level switches (S2) are factory-preset to 0 dBm (1 on).*
2. *Nonswitched line transmit level (R1) is factory-preset to 0 dBm.*
3. *"On" indicates switch-on position; all others are off.*

Figure C-2. 1200-bps Integrated Modem Card (No. 14), N-Sw and N-Sw-SNBU-AA, U.S. and Canada

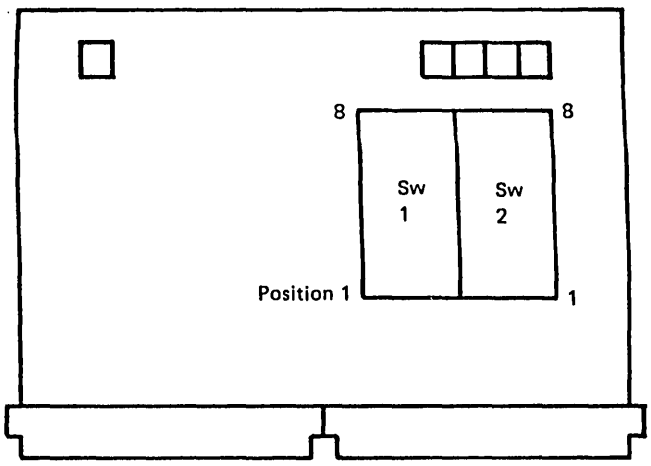

PN 8564508

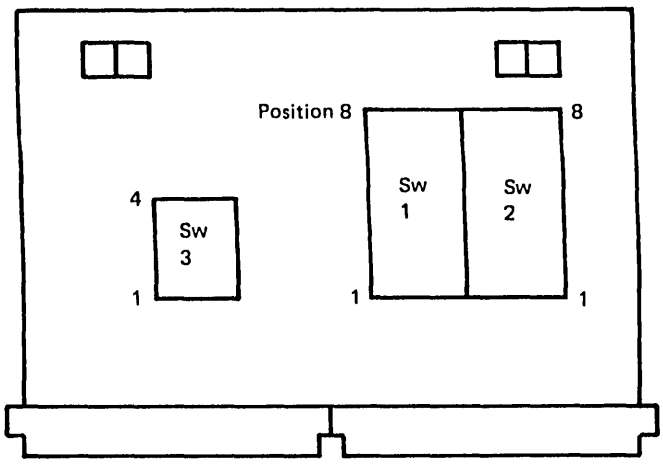

PN 5688021 or 8564481

Sw Position	SW 1			SW 2 (Switched Line Transmit Level)		
	Sw-AA	Sw-MA	Description	Sw-AA	Sw-MA	dBm and SW setting
8	–	–	Not Used	–	–	
7	–	–	Not Used	–	–	0 dBm . . . 1 SW On
6	–	–	Not Used	–	–	-1 . . . 2 -2 . . . 3 -3 . . . 4
5	–	–	Card Test 2	–	–	-4 . . . 5 -5 . . . 6 -6 . . . 1, 7
4	–	–	Not Used	–	–	-7 . . . 2, 7 -8 . . . 3, 7
3	On	On	Card Test 1 Disable	–	–	-9 . . . 4, 7 -10 . . . 5, 7 -11 . . . 6, 7
2	On	–	CBS	–	–	-12 . . . 1, 8 -13 . . . 2, 8
1	–	–	Transmit Level-Low	On (Note)	On (Note)	-14 . . . 3, 8 -15 . . . 4, 8

Note: *"On" indicates switch-on position; all others are off.*

Figure C-3. 1200-bps Integrated Modem Card (No. 14), Sw-AA/MA, U.S. and Canada

		N-Sw		Description	
		2-Wire	4-Wire		
Sw 1	8	–	–	Transmit Level-Low	
	7	–	–	Not used	
	6	On	On	Equalizer Setting	
	5	On	–	2-wire N-Sw	
	4	–	On	Echo clamp	
	3	–	–	CS delay	
	2	–	On	CS delay	
	1	–	On	4-wire N-Sw	
Sw 2	8	–	–	0 dBm 1 Pos On -1 dBm 2 Pos On	N-Sw Line Xmit Level
	7	–	–	-2 dBm 3 Pos On -3 dBm 4 Pos On	
	6	–	–	-4 dBm 5 Pos On -5 dBm 6 Pos On	
	5	–	–	-6 dBm 1, 7 Pos On -7 dBm 2, 7 Pos On	
	4	–	–	-8 dBm 3, 7 Pos On -9 dBm 4, 7 Pos On	
	3	–	–	-10 dBm 5, 7 Pos On -11 dBm 6, 7 Pos On	
	2	–	–	-12 dBm 1, 8 Pos On -13 dBm 2, 8 Pos On	
	1	On (Note)	On (Note)	-14 dBm 3, 8 Pos On -15 dBm 4, 8 Pos On	
Sw 3	4	On	On	Equalizer Setting	
	3	On	On		
	2	On	On		
	1	On	On		

Note: *"On" indicates switch-on position; all others are off. See Figure C-7 for switch setting according to country.*

Figure C-4. 1200-bps Integrated Modem Card (No. 14), N-Sw, WT except Canada

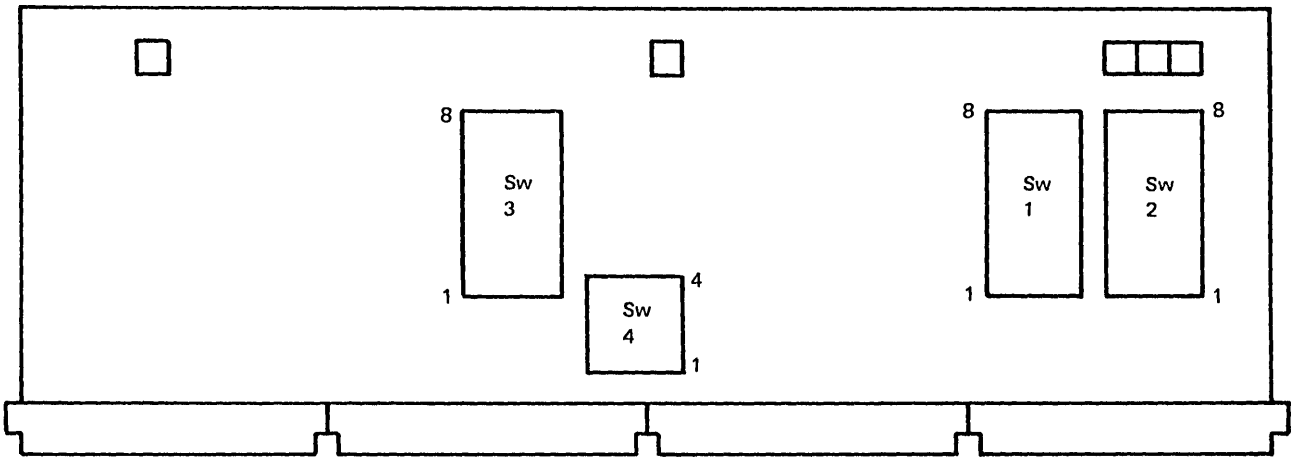

PN 5167247 or 8564480

		2-Wire	4-Wire	Description	
Sw 1	8	–	–	Sw line xmit level-low	
	7	On	On	Nonswitched line xmit level	
	6	–	–	Nonswitched line xmit level-low	
	5	–	On	Echo clamp	
	4	–	–	Clear to send	
	3	–	On	Clear to send	
	2	On	–	2-wire nonswitched line	
	1	On	On	Equalizer setting	
Sw 2	8	–	–	0 dBm 1 Pos On -1 dBm 2 Pos On	Sw Line Xmit Level
	7	–	–	-2 dBm 3 Pos On -3 dBm 4 Pos On	
	6	–	–	-4 dBm 5 Pos On -5 dBm 6 Pos On	
	5	–	–	-6 dBm 1, 7 Pos On -7 dBm 2, 7 Pos On	
	4	–	–	-8 dBm 3, 7 Pos On -9 dBm 4, 7 Pos On	
	3	–	–	-10 dBm 5, 7 Pos On -11 dBm 6, 7 Pos On	
	2	–	–	-12 dBm 1, 8 Pos On -13 dBm 2, 8 Pos On	
	1	On (Note)	On (Note)	-14 dBm 3, 8 Pos On -15 dBm 4, 8 Pos On	
Sw 3	8	–	On	4-wire nonswitched line	N-sw Line Xmit Level
	7	–	–	0 dBm 1 Pos On -1 dBm 2 Pos On	
	6	–	–	-2 dBm 3 Pos On -3 dBm 4 Pos On	
	5	–	–	-4 dBm 5 Pos On -5 dBm 6 Pos On	
	4	–	–	-6 dBm 1, 7 Pos On -7 dBm 2, 7 Pos On	
	3	–	–	-8 dBm 3, 7 Pos On -9 dBm 4, 7 Pos On	
	2	–	–	-10 dBm 5, 7 Pos On -11 dBm 6, 7 Pos On	
	1	On (Note)	On (Note)	-12 dBm 1, Sw 1 - Pos 7 -13 dBm 2, Sw 1 - Pos 7 -14 dBm 3, Sw 1 - Pos 7 -15 dBm 4, Sw 1 - Pos 7	
Sw 4	4	On	On	Equalizer Setting	
	3	On	On		
	2	On	On		
	1	On	On		

Note: *"On" indicates switch-on position; all others are off. See Figure C-7 for switch setting according to country.*

Figure C-5. 1200-bps Integrated Modem Card (No. 14), N-Sw-SNBU-AA, WT except Canada

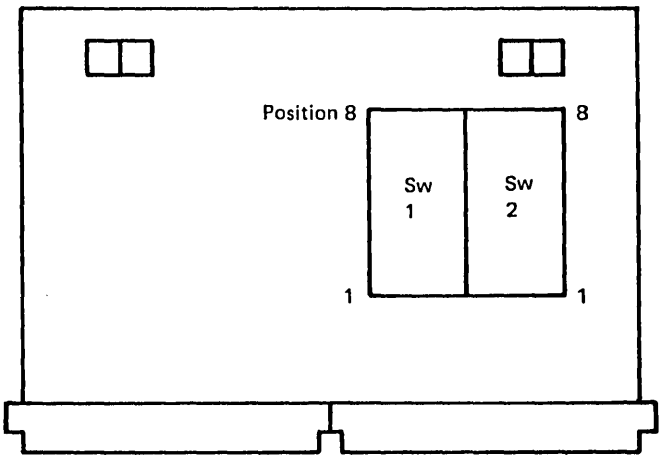

PN 5167246 or 8564479

		SW AA	Description	
Sw 1	8	–	Transmit Level-Low	
	7	On	Equalizer Setting	
	6	On		
	5	–		
	4	–	Not Used	
	3	On	Card Test	
	2	On	Equalizer Setting	
	1	On		
Sw 2	8	–	0 dBm 1 Pos On -1 dBm 2 Pos On	N-Sw Line Xmit Level
	7	–	-2 dBm 3 Pos On -3 dBm 4 Pos On	
	6	–	-4 dBm 5 Pos On -5 dBm 6 Pos On	
	5	–	-6 dBm 1, 7 Pos On -7 dBm 2, 7 Pos On	
	4	–	-8 dBm 3, 7 Pos On -9 dBm 4, 7 Pos On	
	3	–	-10 dBm 5, 7 Pos On -11 dBm 6, 7 Pos On	
	2	–	-12 dBm 1, 8 Pos On -13 dBm 2, 8 Pos On	
	1	On (Note)	-14 dBm 3, 8 Pos On -15 dBm 4, 8 Pos On	

Note: *"On" indicates switch-on position; all others are off. See Figure C-7 for switch setting according to country.*

Figure C-6. 1200-bps Integrated Modem Card (No. 14), Sw-AA, WT except Canada

Country[1]	Maximum Transmit Level for a Standard (600 ohms) Load	
	Nonswitched	Switched[2]
Argentina	0 dBm	0 dBm
Austria	-6 dBm	Not applicable
Belgium	-6 dBm	Not applicable
Brazil	0 dBm	Not applicable
Canada	0 dBm	-10 dBm
Chile	-6 dBm	Not applicable
Colombia	0 dBm	0 dBm
Costa Rica	0 dBm	0 dBm
Ecuador	0 dBm	0 dBm
France	-12 dBm (2 wire) -15 dBm (4 wire)	-9 dBm
Germany	-6 dBm	Not applicable
Greece	0 dBm	0 dBm
Guatemala	0 dBm	0 dBm
Hong Kong	-5 dBm	-9 dBm
Iceland	-6 dBm	-6 dBm
Iran	-6 dBm	-6 dBm
Israel	-6 dBm	-6 dBm
Italy[3]	-10 dBm (4 wire) -13 dBm (2 wire)	0 dBm 0 dBm
Japan	0 dBm	Not applicable
Mexico	0 dBm	Not applicable
Netherlands	-6 dBm (4 wire) -9 dBm (2 wire)	-6 dBm Not applicable
Panama	0 dBm	0 dBm
Portugal	0 dBm	-3 dBm
Switzerland	-6 dBm	Not applicable
U.K.	-13 dBm	-9 dBm
Uruguay	0 dBm	0 dBm
Venezuela	0 dBm	0 dBm

[1] For countries not listed, set level to that specified by country PTT.

[2] For switched line: if line plate is installed, add–1 dBm to compensate for insertion loss.

[3] Italy: Integrated modems are generally not allowed. Exceptions can be obtained on a case-by-case basis.

Figure C-7. WTC 1200-bps Integrated Modem Transmit Level Settings (Card No. 14)

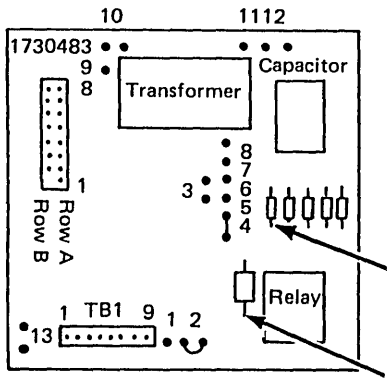

Assembly PN 1734234

Test point 1, bottom lead of diode; polarity depends on line connection.
Test point 2, bottom lead of resistor; polarity depends on line connection.

Line Plate Jumper Positions

Jumper Position	Jumper Required (PN 1794401)	Description	
1		No telephone handset attached	
2	X	Telephone handset attached	
3		0 ohms	
4	X	150 ohms (Factory jumpered)	DC current adjustment
5		480 ohms	
6		330 ohms	
7		660 ohms	
8		810 ohms	
9		Must not be installed	
10	X	Always required	
11		Must not be installed	
12	X	Always required	
13	X	Always required	

Line Plate Current-Adjustment Chart

Voltage (dc) Across Test Points 1 and 2	Jumper Position
0.5 - 2.0	3 –
2.0 - 3.5	4, 3
3.5 - 4.0	4, 6
4.0 - 6.0	4, 6, 5
6.0 - 8.0	6, 4, 5, 7
8.0 - 9.0	6, 4, 5, 7, 8
9.0 - 14.0	5, 4, 6, 7, 8
14.0 - 26.0	7, 6, 5, 8
26.0 - 37.0	8, 5, 7
37.0 - 50.0	8, 7

Line-plate current is adjusted by positioning a jumper on the line-plate assembly as follows:

1. Remove the factory installed adjustment jumper from position 4. See 1 and 2.
2. Connect a voltmeter (use the 0 to 50V dc scale) across test points 1 and 2. See 1.
3. Set the Data/Talk switch to Talk and place the handset offhook; note the voltage reading.
4. In the Jumper Position column of the current-adjustment chart 3, find the position(s) corresponding to the observed voltage and plug in the jumper (into the first position given, if there is more than one).
5. Set the Data/Talk switch to Data and again note the voltage. If it changed and if more than one position is given in the chart, move the jumper to the next position—and continue moving it until you find the voltage reading that is closest to that obtained in step 3.

Note: *Use only one jumper position, and use only one of those indicated in the current-adjustment chart as being appropriate for the observed voltage.*

Figure C-8. Line Plate Current Adjustment Procedure, WT except Canada

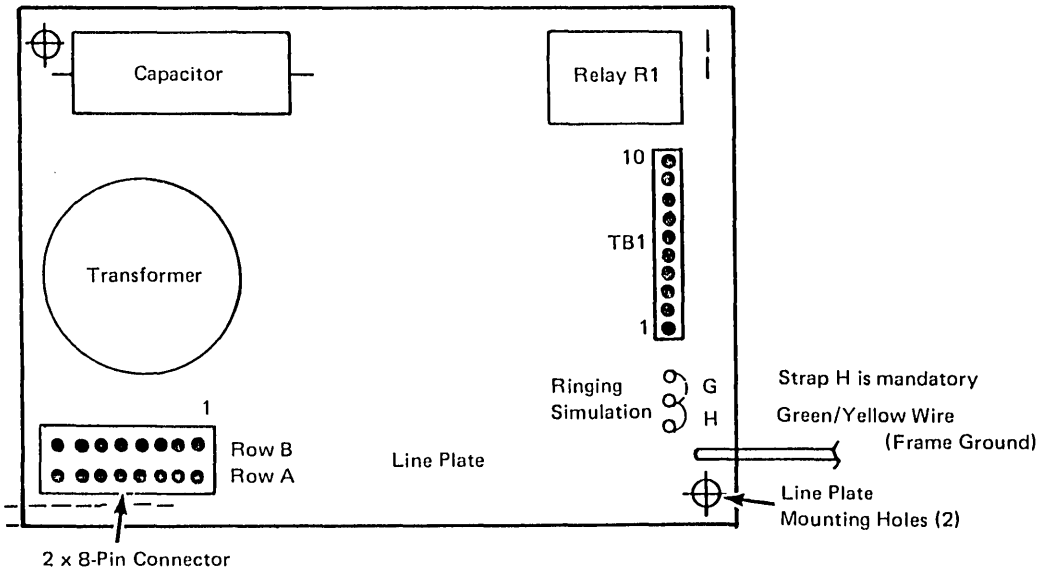

Note: *Line plate PN 2682397 replaces PN 1734234.*

Figure C-9. Line Plate Automatic Adjustment

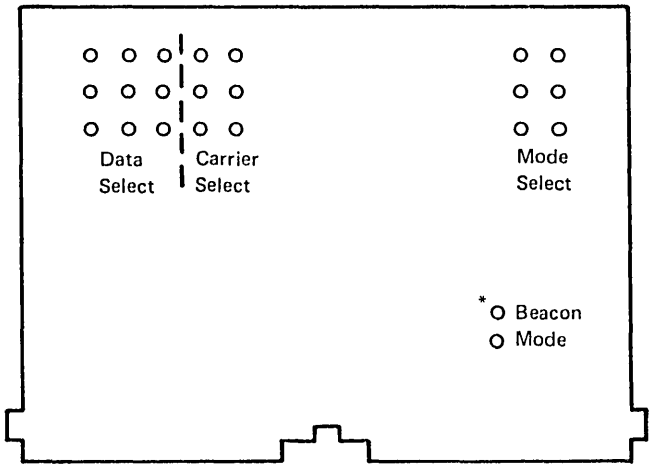

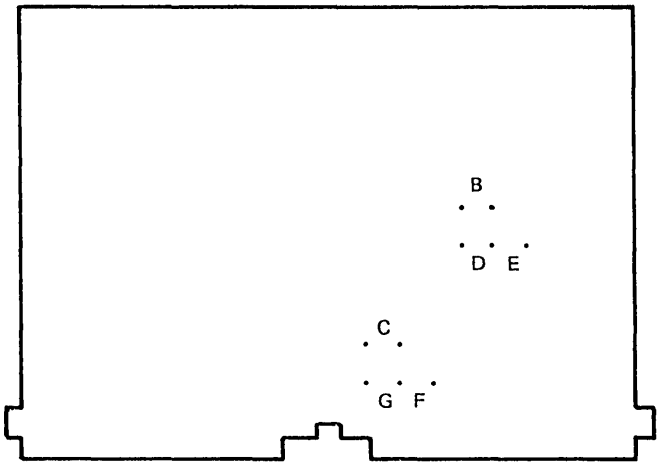

Note: *Install jumper PN 1675209 (7 required) to select carrier speed and mode using chart below. Speed selected must match the speed of service provided by the loop controller.*

Data/Carrier Select	Beacon *	Mode Select	Carrier Speed
			9.6K bps
			38.4K bps

*Beacon mode is on card PN 8548788.

Figure C-10. Loop Card Jumpering (Card No. 14) (PN 2399082 and 8548788)

Notes:

1. *Positions B and C are for card test purposes and should be removed.*
2. *Position D enables wrap at VTL interface (not used on the 3274 Models 51C, 52C).*
3. *Position E is spare.*
4. *Positions F and G should not be jumpered for 3274 Models 51C and 52C.*

Figure C-11. EIA/CCITT Card Jumpering (Card No. 14) (PN 5864660, 5864668)

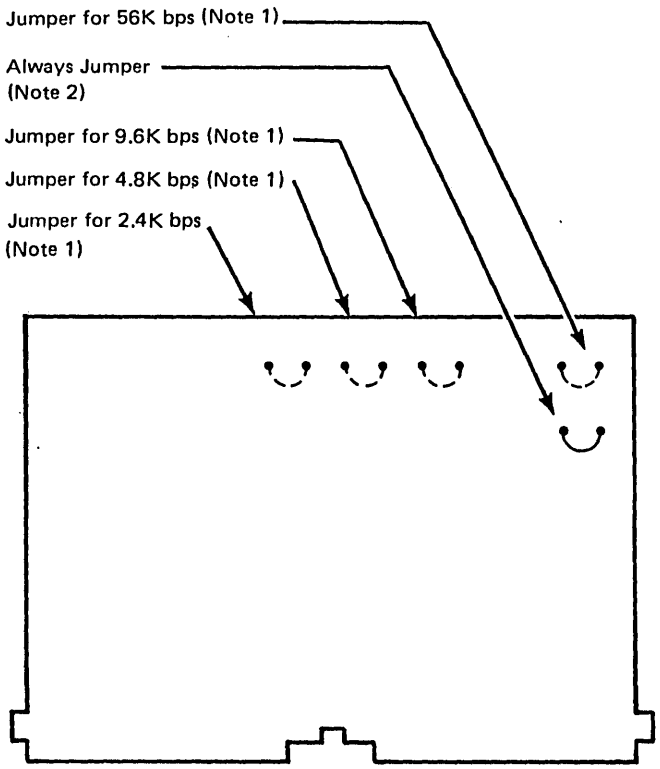

Notes:

1. *Install jumper (2731801) to select 56K bps, 9.6K bps, 4.8K bps, or 2.4K bps. Speed selected MUST match the speed of service supplied by common carrier.*
2. *This jumper MUST always be installed.*

Figure C-12. DDS Adapter Card Jumpering (Card No. 14), U.S. and Canada Only

	Cable Socket of D/R Type A Card No. 28 (J3)	Cable Pins		Board Conn (Note 1) Z1 or Z3
From Part 2 A	A03	B02	Xmit 6FO	A6D04 - H6A04
	A04	B03	-Set Sel Slp LHT	A6E04 - H6B04
	A05	B04	PLS Data from Sel Term	B6A04 - H6C04
	A06	B05	Xmit 2FO	B6B04 - H6D04
	A07	B06	Poll Adr Bit 1	B6C04 - H6E04
	A08	B07	Rst Sel Slp LHT	B6D04 - J6A04
	A09	B08	PLS Data to Sel Dr	B6E04 - J6B04
	A10	B09	+Sel Device Is Aware	C6A04 - J6C04
	A12	B10	Delayed Xmit Enable	C6B04 - J6D04
	A13	B11	Poll Adr Bit 4	C6C04 - J6E04
	A14	B12	-PGM POR	C6D04 - K6A04
	A15	B13	Poll Adr Bit 2	C6E04 - K6B04
	A01	D02	Not used	A6D02 - H6A02
	A16	D13	+Sel D/R Card 1	C6E02 - K6B02
	A11 — A02	Jumper		

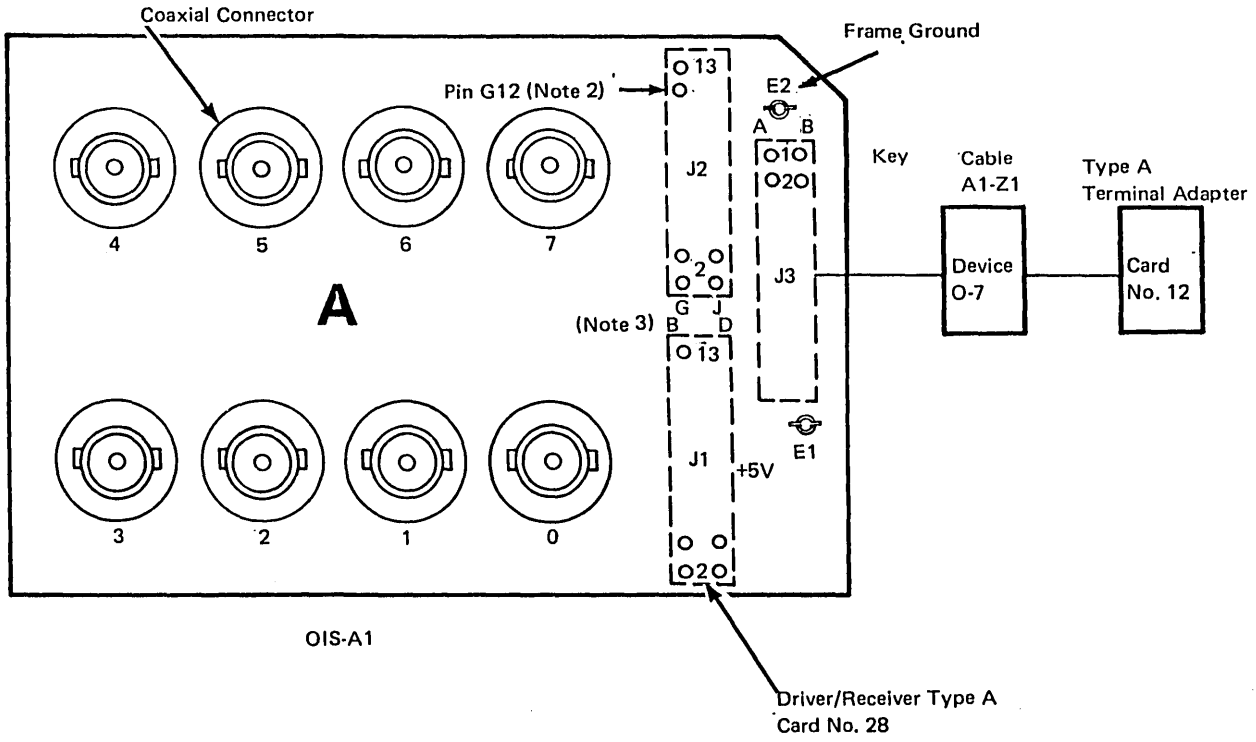

Notes:

1. *Cable location is Z1 for board PN 5643329 or 6226635 (2400, 4800, or 9600 integrated modem). Cable location is Z3 for board PN 5699828 or 564330.*

2. *Pin G12 is cut so it does not make contact with card J2. This is done on early-production machines only.*

3. *+5V found on D03, J03, and dc rtn (ground) found on D08, J08.*

Figure C-13 (Part 1 of 2). Type A Adapter Coaxial Panel Card and Cable

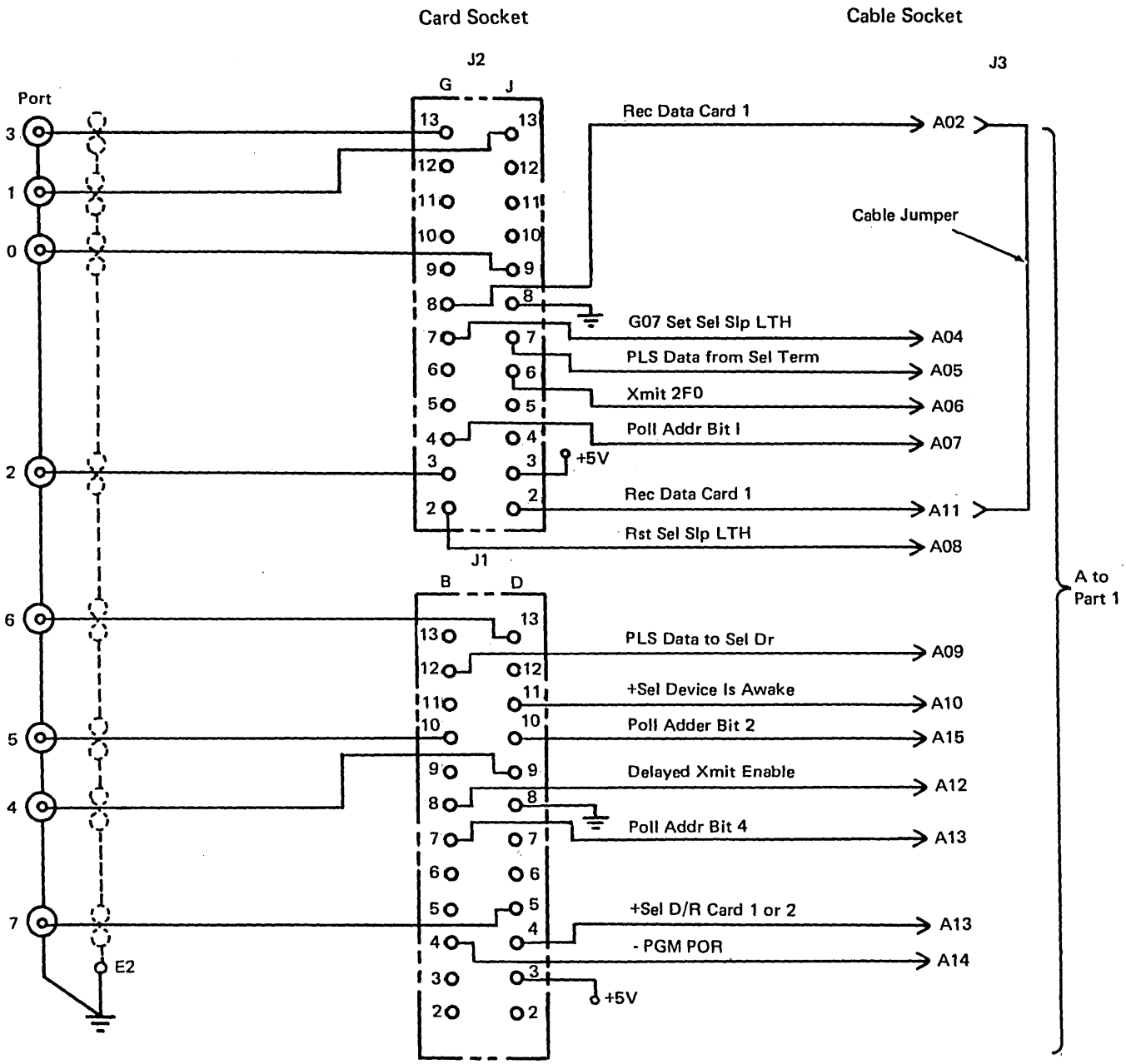

Figure C-13 (Part 2 of 2). Type A Adapter Coaxial Panel Card and Cable

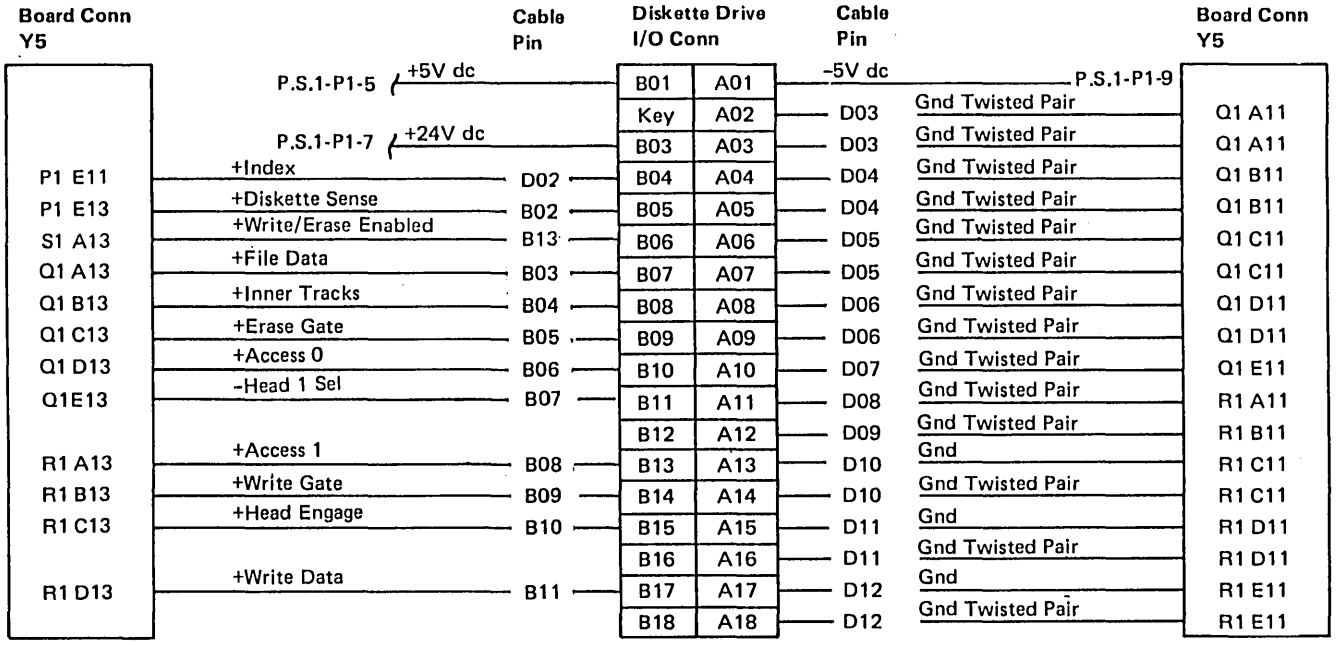

Figure C-14. Cable from the 01A-A1 Board to Diskette Drive File Control Card

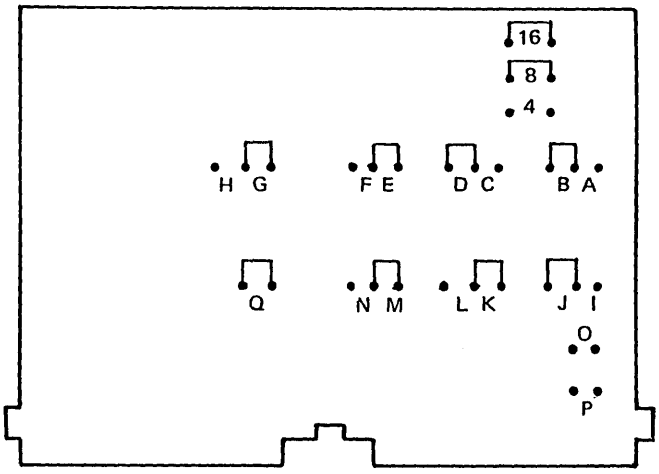

Card PN 8564561 (Early-Production Machines)

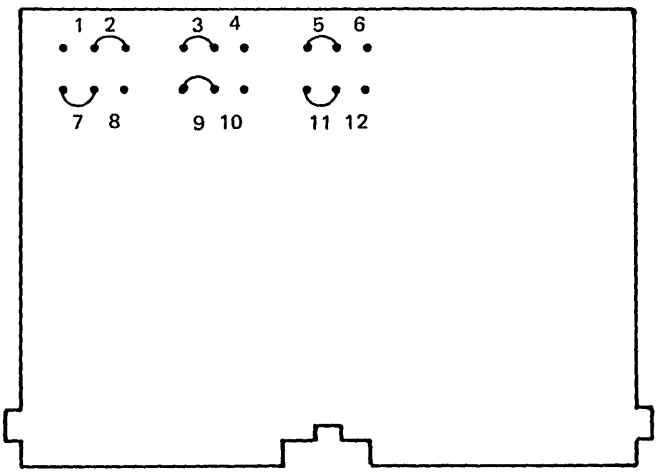

Card PN 5687968 or 5864683

Notes:

1. *Use jumper PN 2731801.*
2. *Always jumper card as shown for switched or nonswitched operation.*

Figure C-16. X.21 Switched or Nonswitched Adapter Card Jumpering

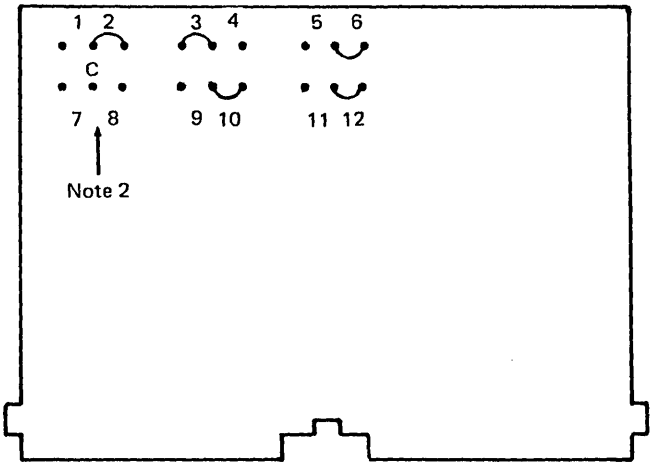

Card PN 5864683 (Later Production Machines)

Notes:

1. *Use jumper PN 2731801.*
2. *Place jumper from C to position 7 for HPCA. Place jumper from C to position 8 for CCA.*

Figure C-15. X.21 Nonswitched Adapter Card Jumpering

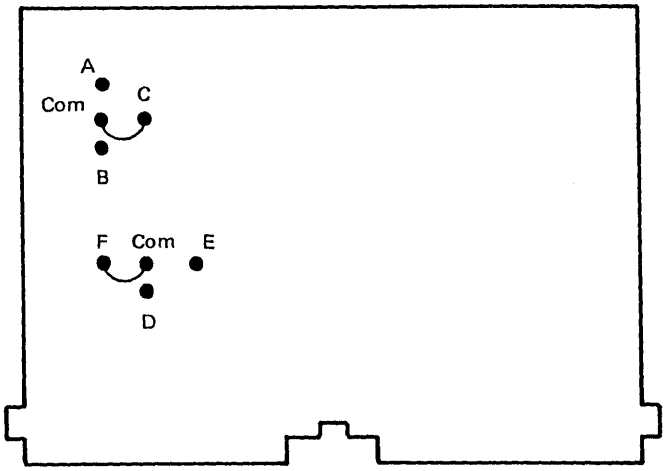

Notes:

1. *Position A, D. Manufacturing test jumpers. Removed for field operations.*
2. *Position B. Storage position for card wrap jumper. It should not be used on 3274.*
3. *Position C. Install for wrap on card.*
4. *Position E. 3274 diagnostic test mode. Removed for field operations.*
5. *Position F. Modem mode. Clock supplied by DCE. Jumper (PN 2731801) must be installed.*

Figure C-17. V.35 Card No. 14 Jumpering

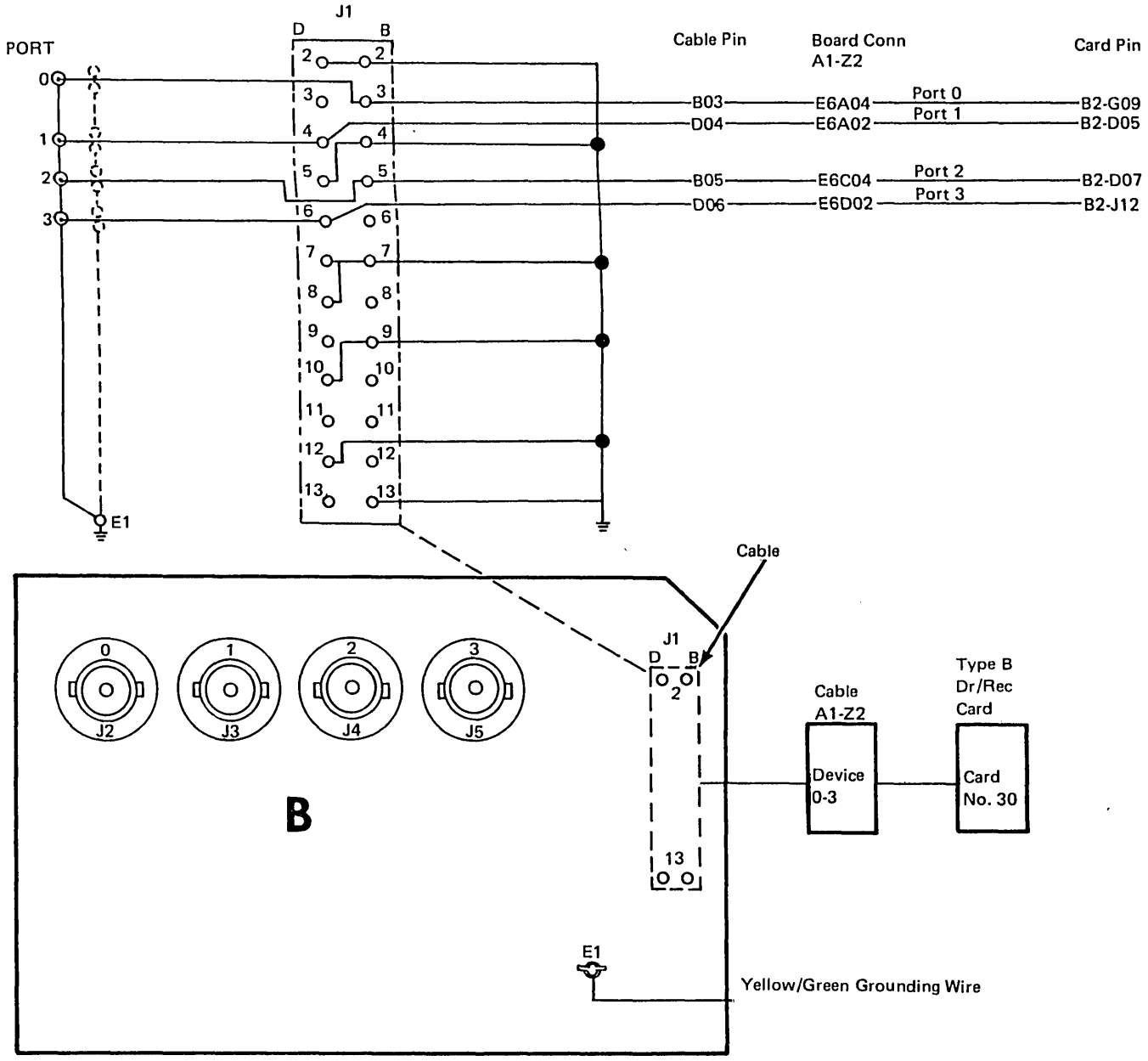

Figure C-18. Cable–Type B Coaxial Panel to A1 Board

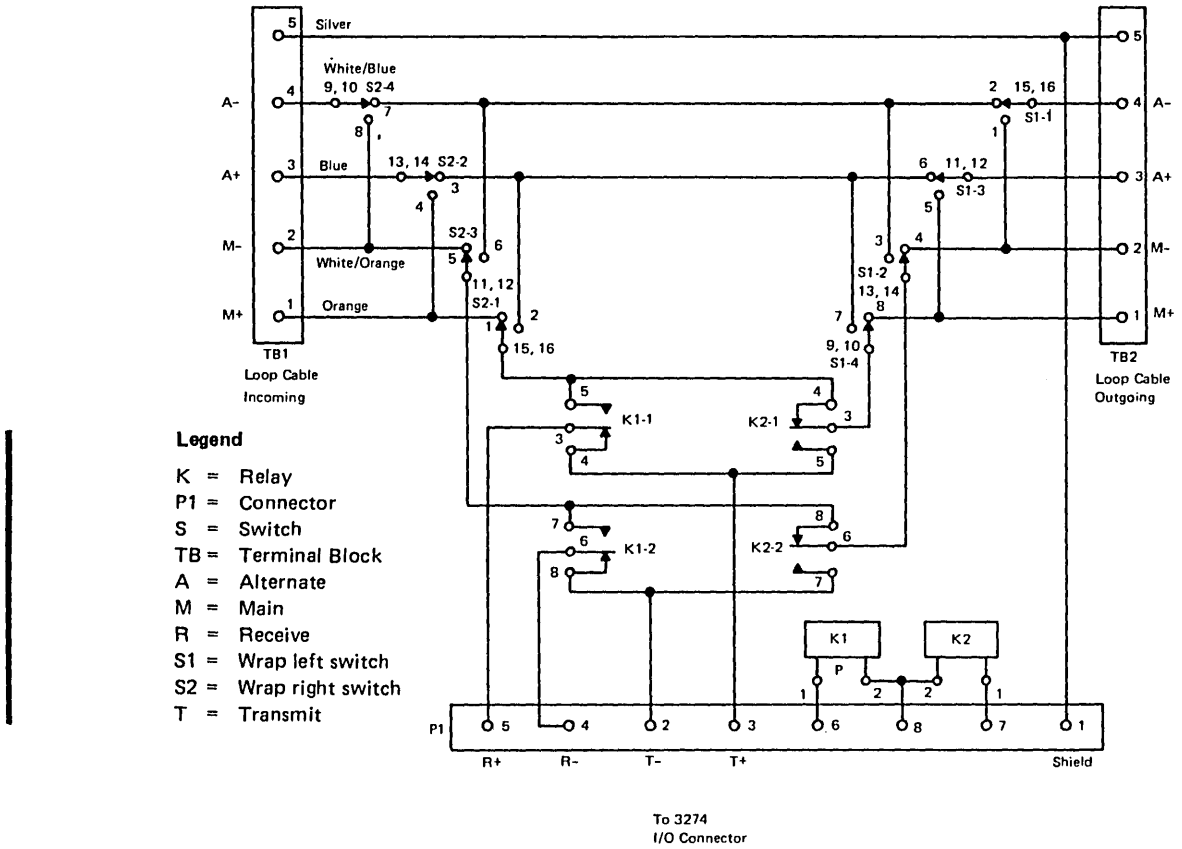

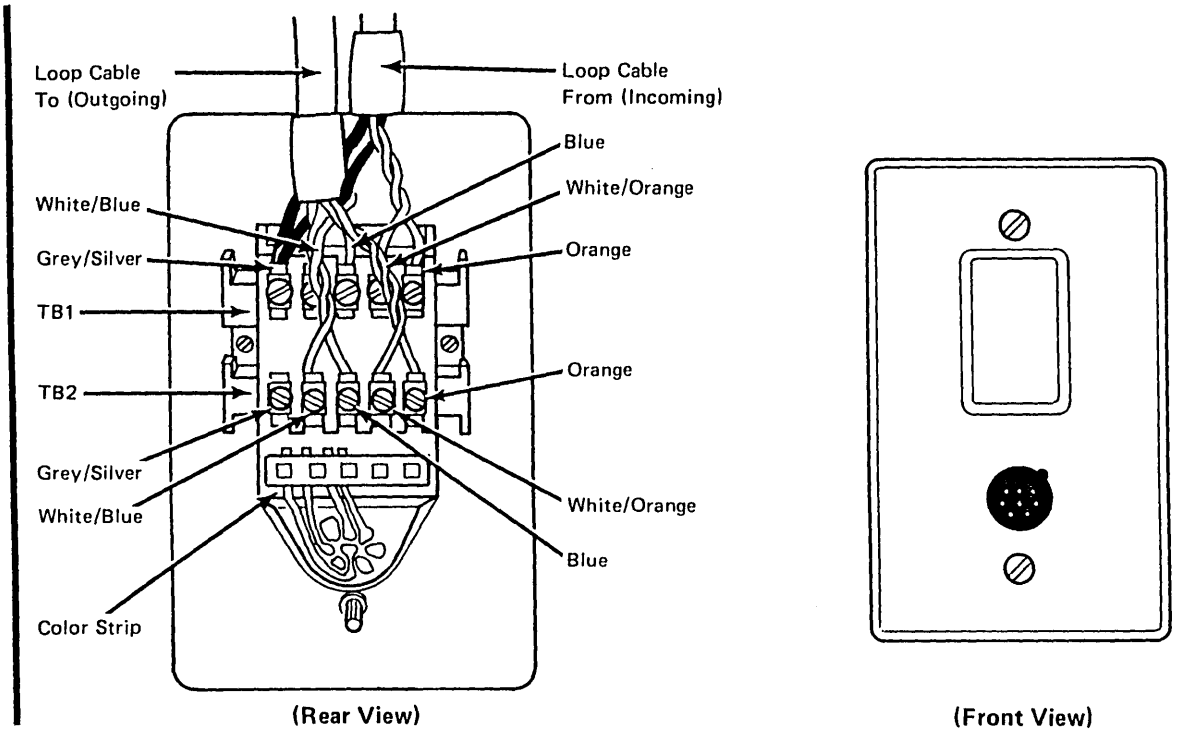

Figure C-19. Loop Station Connector (LSC)

Appendix D. Operator and Control Panels

This appendix provides the following 3274 Models 51C and 52C operator/control panel information:

- General Information
- Switch and Indicator Descriptions
- Operator Panel Functions
- Loop and Modem Control Panel Settings
- Wiring Diagrams

D.1 3274 Models 51C and 52C Operator Panel

The 3274 operator panels for Models 51C and 52C are illustrated in Figures D-1 through D-11 as follows:

Figure D-1. 3274 Operator Panel – Model 51C with Digital Data Service (DDS) Adapter or Models 51C/52C with X.21 with/without Encrypt/ Decrypt Feature

Figure D-2. 3274 Operator Panel – Models 51C/52C with Loop Attachment

Figure D-3. 3274 Operator Panel – Models 51C/52C with 1200-bps Integrated Modem or External Modem

Figure D-4. 3274 Operator Panel – Models 51C/52C with 1200-bps Integrated Modem with (1) Switched Line with Auto Answer Feature or (2) Non-switched Line with Auto Answer Feature

Figure D-5. 3274 Operator Panel – Model 51C with 1200-bps Integrated Modem with (1) Switched Line with Manual Auto Answer Feature or (2) Nonswitched Line with SNBU and Manual Auto Answer Feature

Figure D-6. 3274 Operator Panel – Model 51C with 2400-, 4800-, or 9600-bps Integrated Modem

Figure D-7 Operator Panel Component Pin Locations

Figure D-8. Operator Panel Locations (without 2400-, 4800-, or 9600-bps Integrated Modem)

Figure D-9. Operator Panel Assembly Cable Plugging

Figure D-10. Operator Panel Card/Panel/Board Connection Wiring Diagram without 2400-, 4800-, and 9600-bps Integrated Modem Feature (Foldout)

Figure D-11. Operator Panel Card/Panel/Board Connection Wiring Diagram with 2400-, 4800-, and 9600-bps Integrated Modem Feature

D.1.1 Indicators 8 4 2 1

The four lights (8 4 2 1) on the panel are the operational indicators. These indicators first serve as Bus and Lamp Test indicators: if all indicators are on while the IML pushbutton is pressed, it indicates a successful Bus and Lamp Test. When the IML pushbutton is released, all lights go out and the 3274 proceeds to execute the IML tests. During IML, these lights indicate IML test failures. Test segments are run sequentially, and the particular segment running is indicated by the lights in 8 4 2 1 code. When a failure is detected, the test stops and the failing test number is displayed in the operational indicators (8 4 2 1).

While Operational Code is running, the lights indicate the last recoverable error encountered. The problem-isolation sequence uses this data, both from IML tests and from operational tests.

D.1.2. Loop Attachment Indicators

The operator panel for Models 51C and 52C with the Loop Attachment feature has three additional indicators as shown in Figure D-2. These indicators [OK (Line Ready), External Check, and Machine Check)] report the loop condition and the source of check conditions associated with the loop.

D.1.3 Switched Line Operate Switch/Call In Progress Indicator

The operator panel for Models 51C and 52C with the Switched Network facility has the Call In Progress indicator and the Talk/Data switch as shown in Figure D-4. The Switched Network facility provides access to switched lines for data or voice communications and can be used for switched network backup.

D.1.4 2400-, 4800-, and 9600-bps Integrated Modem Indicators

The operator panel for Model 51C has four additional indicators: Operate, Test; Data Quality–Good, Poor. These indicators are shown in Figure D-6.

D.2 IML Options

Three IML options are made available by the ALT switch, a three-position pushbutton switch. The three positions are 0 (normal), ALT1, and ALT2. When IML is pressed, the position of ALT determines the IML control-storage entry point. The operation is variable, depending on which diskette is installed. The following describes the operation with the system diskette installed.

D.2.1 Normal

With ALT in the normal (not depressed) position, pressing and holding IML will cause a Bus Test to be performed. Releasing IML after a Bus Test will cause the IML Test to run. At the successful completion of the IML tests, Operational Code is loaded. The IML tests require approximately 1 minute to execute. Successful completion is indicated by all indicators being on. All indicators remain on while the Operational Code is being loaded, and all turn off upon completion of this load.

D.2.2 ALT 1

Momentarily pressing IML while holding the ALT switch in ALT 1 permits the Operational Code to be loaded directly (bypassing IML tests). This load procedure should be used only following a normal IML attempt, and is intended for those situations where the normal IML fails but useful work can still be performed by the Operational Code.

Note: *A normal IML attempt is required to initialize memory and bring the 3274 up. Press IML with ALT in the normal position before any other startup method is attempted.*

D.2.3 ALT 2

Momentarily pressing the IML pushbutton while holding the ALT switch in the ALT 2 position invokes adapter and cable-wrap test functions for the following adapters:

- High-Performance Communications Adapter (HPCA)
- Common Communications Adapter (CCA)
- Digital Data Service (DDS) Adapter
- 1200-bps Integrated Modem
- Loop Adapter
- 2400-, 4800-, 9600-bps Integrated Modem

The Wrap Test function and invoking procedures are described in Chapter 5.

D.2.4 ALT 2 (2400-, 4800-, and 9600-bps Integrated Modem)

Holding the ALT IML Address switch in the ALT 2 position will cause the modem self-test to be initiated and repeated approximately every 4 seconds until the switch is released.

D.3 Loop and Modem Control Panels

D.3.1 Loop Attachment Control Panel

The loop attachment control panel for Models 51C and 52C with the loop attachment feature is shown in Figure D-2. This panel, located in the customer access area, provides loop mode and speed controls.

D.3.2 1200-bps Integrated Modem Control Panel

The modem control panel for Models 51C and 52C with the 1200 -bps Integrated Modem is shown in Figures D-3 and D-4. This panel, located in the customer access area, provides speed and transmit level attenuation controls.

D.3.3 1200 bps Transmit Level Attenuation Switch Adjustment Procedure (U.S. and Canada Only)

Four attenuation switches are installed on the 3274 Model 51C (U.S. and Canada only) when attached to a switched network through a 1200 bps Integrated Modem. These switches are used to match the 3274 transmit level to the data coupler (CDR, DBS, or FCC-certified equivalent) that is attached to the communication line termination. Use the following chart to determine the correct setting of the switches for the dBm level required.

dBm Level	Transmit Level Switches			
	-1 dB	-2 dB	-4 dB	-8 dB
0	OFF	OFF	OFF	OFF
-1	ON	OFF	OFF	OFF
-2	OFF	ON	OFF	OFF
-3	ON	ON	OFF	OFF
-4	OFF	OFF	ON	OFF
-5	ON	OFF	ON	OFF
-6	OFF	ON	ON	OFF
-7	ON	ON	ON	OFF
-8	OFF	OFF	OFF	ON
-9	ON	OFF	OFF	ON
-10	OFF	ON	OFF	ON
-11	ON	ON	OFF	ON
-12	OFF	OFF	ON	ON
-13	ON	OFF	ON	ON
-14	OFF	ON	ON	ON
-15	ON	ON	ON	ON

Located on the 1200-bps Integrated Modem Control Panel (See Figure D-4)

In countries other than the U.S. and Canada, the Transmit Level Attenuation switches are not set on the Integrated Modem card (Card No. 14) at the plant of manufacture in accordance with PTT specifications for that country.

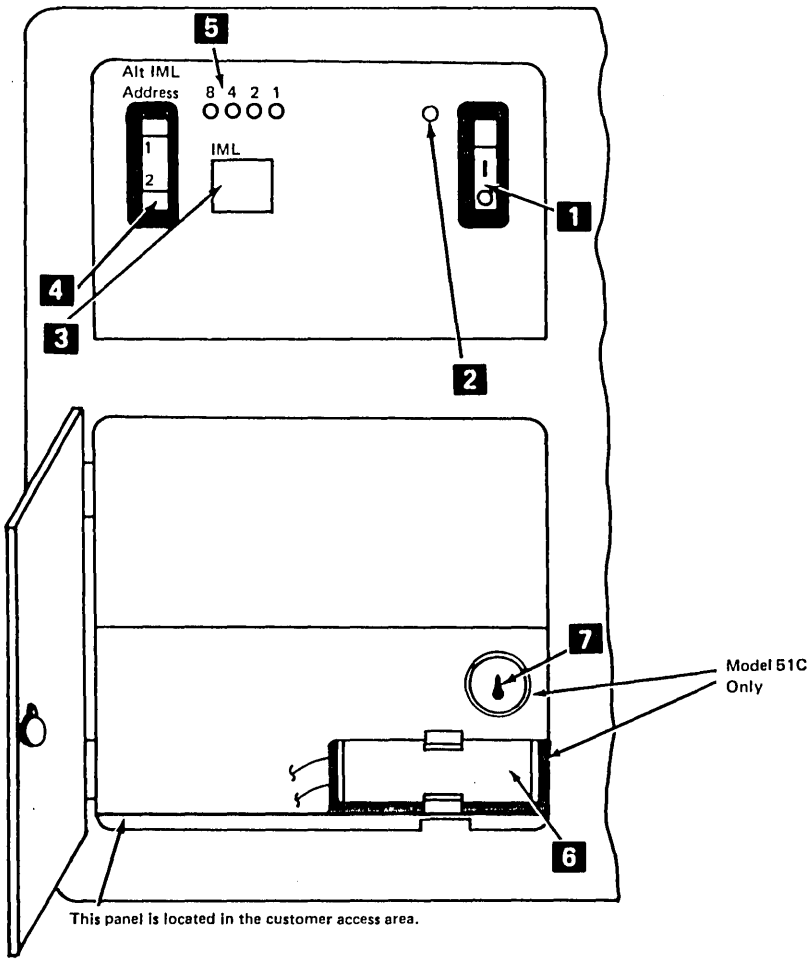

Ref	Description
1	On/Off switch: [1] = On; [O] = Off.
2	On indicator: Indicates the 3274 is on.
3	IML (Initial Machine Load) pushbutton: Pressing and holding causes a basic test to run. When the pushbutton is released, IML tests start. At completion, the machine is loaded.
4	Alt IML Address switch: • 1: Holding, while pressing the IML pushbutton, bypasses the tests and loads the machine directly. Use only after normal IML fails. • 2: Holding, while pressing the IML pushbutton, invokes adapter and wrap tests.

Ref	Description
5	8 4 2 1 indicators: These light while the IML pushbutton is held. During IML, they follow the test sequence. At completion, they all go out. During operation, they indicate operational status.
6	Encrypt/Decrypt Battery – Allows the master key to be maintained in the 3274 when power is off.
7	Encrypt/Decrypt Key Switch – Allows a new master key to be entered when in the horizontal position.

Figure D-1. 3274 Operator Panel – Model 51C with Digital Data Service (DDS) Adapter or Models 51C/52C with X.21 with/without Encrypt/Decrypt Feature

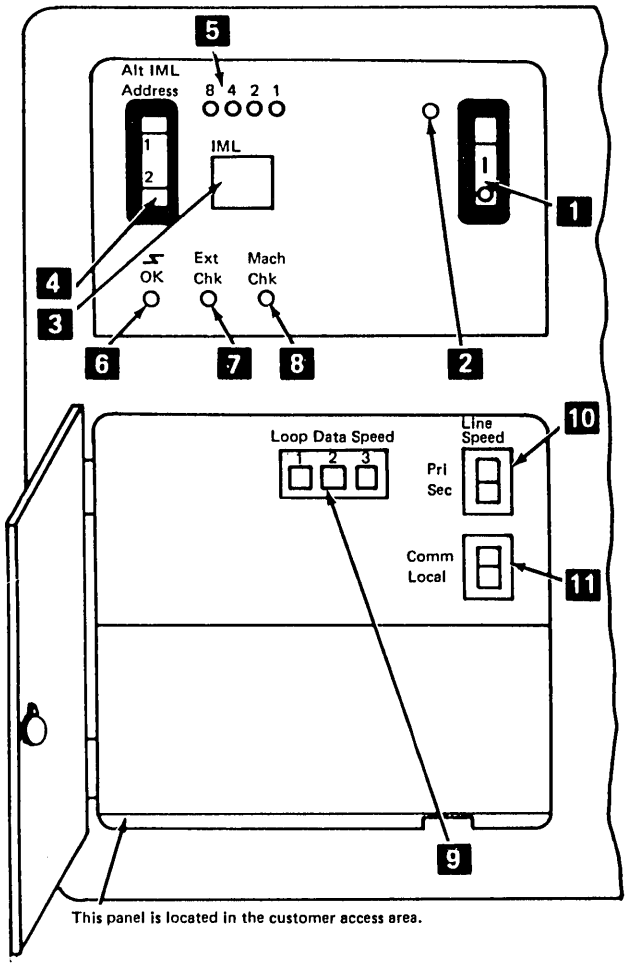

Ref	Description
1	On/Off switch: [1] = On; [O] = Off.
2	On indicator: Indicates the 3274 is on.
3	IML (Initial Machine Load) pushbutton: Pressing and holding causes a basic test to run. When the pushbutton is released, IML tests start. At completion, the machine is loaded.
4	Alt IML Address switch: • 1: Holding, while pressing the IML pushbutton, bypasses the tests and loads the machine directly. Use only after normal IML fails. • 2: Holding, while pressing the IML pushbutton, invokes the adapter and wrap test.
5	8 4 2 1 indicators: These light while the IML pushbutton is held. During IML, they follow the test sequence. At completion, they all go out. During operation, they indicate operational status.
6	OK (Line Ready indicator): Indicates that a valid message was received within the last 8 seconds.
7	External Check indicator: Indicates error external to the 3274.

Ref	Description
8	Machine Check Indicator: Indicates problems internal to the 3274.

Note: *If the I/O cable is not attached to the LSC connector, the machine check indicator will be turned on after the IML Op Code is loaded. This is not a machine problem.*

9 Loop Data Speed Switches (up is ON, down is OFF)

Loop Carrier Speed (bps)[4]	Line Speed (bps)[3]		Loop Data Speed Switch Settings		
	Pri	Sec	1	2	3
9600[1]	9600	4800	Off	Off	Off
9600[1]	9600	2400	Off	Off	On
9600[1]	4800	2400	Off	On	Off
9600[1]	2400	1200	On	Off	Off
38,400[2]	38,400	Not used	Off	Off	Off
38,400[2]	9600	Not used	On	Off	Off

[1] Data-link-attached loop
[2] Directly attached loop
[3] Line speed must match speed of loop controller.
[4] Loop carrier speed is also set on Loop Card No. 14, and must match speed of loop controller. See Figure C-10.

Ref	Description
10	Primary/Secondary Speed Switch – Used to select the primary or secondary speed as shown in 9 above under "Speed (bps)".
11	Local/Communicate Switch – Used to isolate problems on the loop. In the Local position, the 3274 is disconnected from the loop; in the Communicate position, the 3274 is connected to the loop.

Figure D-2. 3274 Operator Panel – Models 51C/52C with Loop Attachment

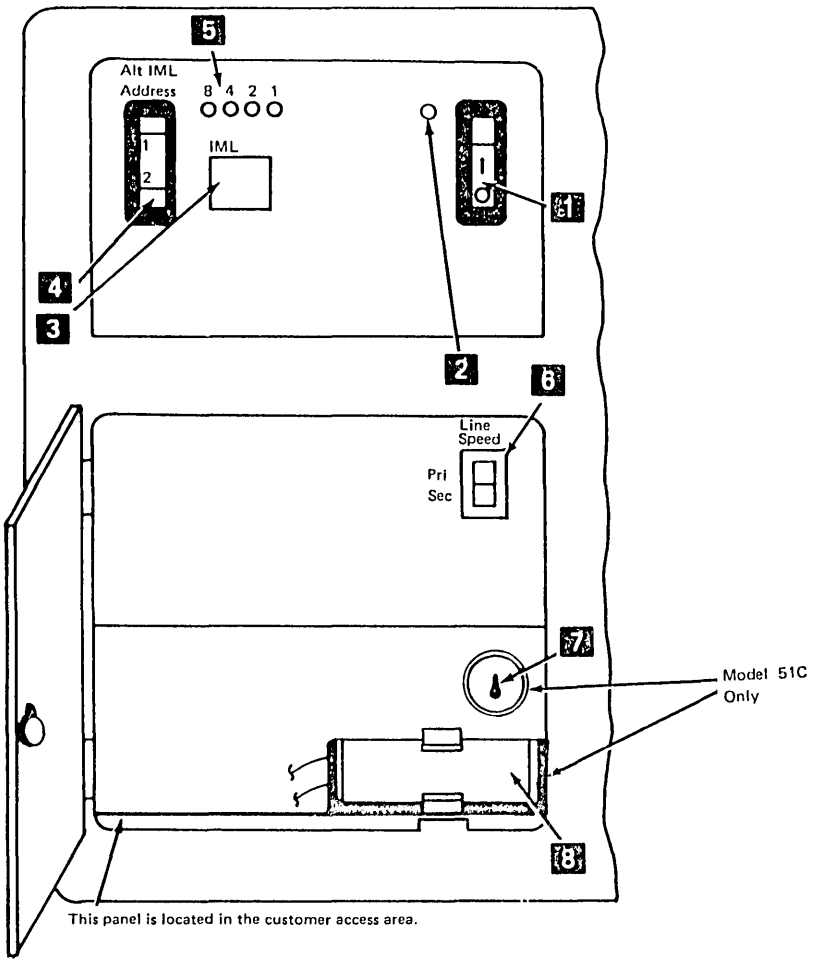

Ref	Description
1	On/Off switch: [1] = On; [O] = Off.
2	On indicator: Indicates the 3274 is on.
3	IML (Initial Machine Load) pushbutton: Pressing and holding causes a basic test to run. When the pushbutton is released, IML tests start. At completion, the machine is loaded.
4	Alt IML Address switch: • 1: Holding, while pressing the IML pushbutton, bypasses the tests and loads the machine directly. Use only after normal IML fails. • 2: Holding, while pressing the IML pushbutton, invokes the adapter and wrap test.
5	8 4 2 1 indicators: These light while the IML pushbutton is held. During IML, they follow the test sequence. At completion, they all go out. During operation, they indicate operational status.
6	Primary/Secondary Speed Switch – In the Primary position the modem operates at normal speed; in the Secondary position the modem operates at half speed.
7	Encrypt/Decrypt Key Switch – Allows a new master key to be entered when in the horizontal position.
8	Encrypt/Decrypt Battery – Allows the master key to be maintained in the 3274 when power is off.

Figure D-3. 3274 Operator Panel – Models 51C/52C with 1200-bps Integrated Modem or External Modem

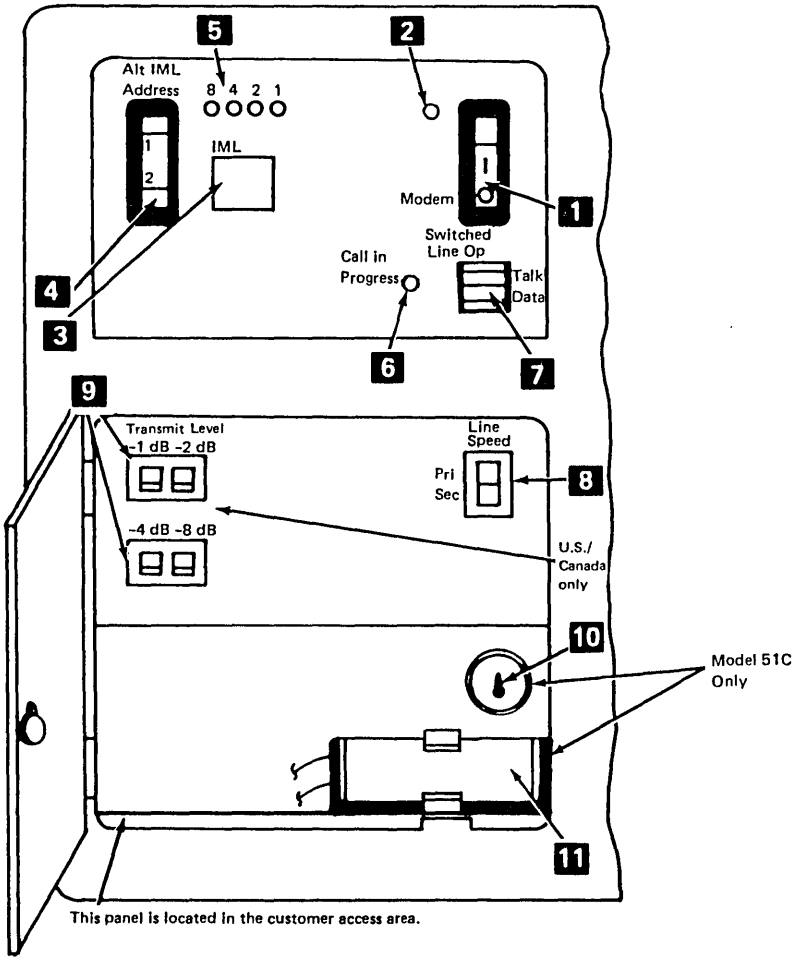

Ref	Description
1	On/Off switch: [|] = On; [O] = Off.
2	On indicator: Indicates the 3274 is on.
3	IML (Initial Machine Load) pushbutton: Pressing and holding causes a basic test to run. When the pushbutton is released, IML tests start. At completion, the machine is loaded.
4	Alt IML Address switch: • 1: Holding, while pressing the IML pushbutton, bypasses the tests and loads the machine directly. Use only after normal IML fails. • 2: Holding, while pressing the IML pushbutton, invokes adapter and wrap tests.
5	8 4 2 1 indicators: These light while the IML pushbutton is held. During IML. they follow the test sequence. At completion, they all go out. During operation, they indicate operational status.
6	Call In Progress Indicator: Indicates that a connection has been established (switched network only).

Ref	Description
7	Talk/Data Switch • Talk Position – The operator may use the handset for voice communication. • Data Position – The handset is bypassed; only machine data is allowed on the communication line (switched network only).
8	Primary/Secondary Speed Switch – In the Primary position the modem operates at normal speed; in the Secondary position the modem operates at half speed.
9	Transmit Level Attenuation Switches (switched network/U.S. and Canada only) – These four switches provide 0 to –15 dB attenuation of the transmit level in 1 dB increments.
10	Encrypt/Decrypt Key Switch – Allows a new master key to be entered when in the horizontal position.
11	Encrypt/Decrypt Battery – Allows the master key to be maintained in the 3274 when power is off.

Figure D-4. 3274 Operator Panel – Models 51C/52C with 1200-bps Integrated Modem with (1) Switched Line with Auto Answer Feature or (2) Nonswitched Line with Auto Answer Feature

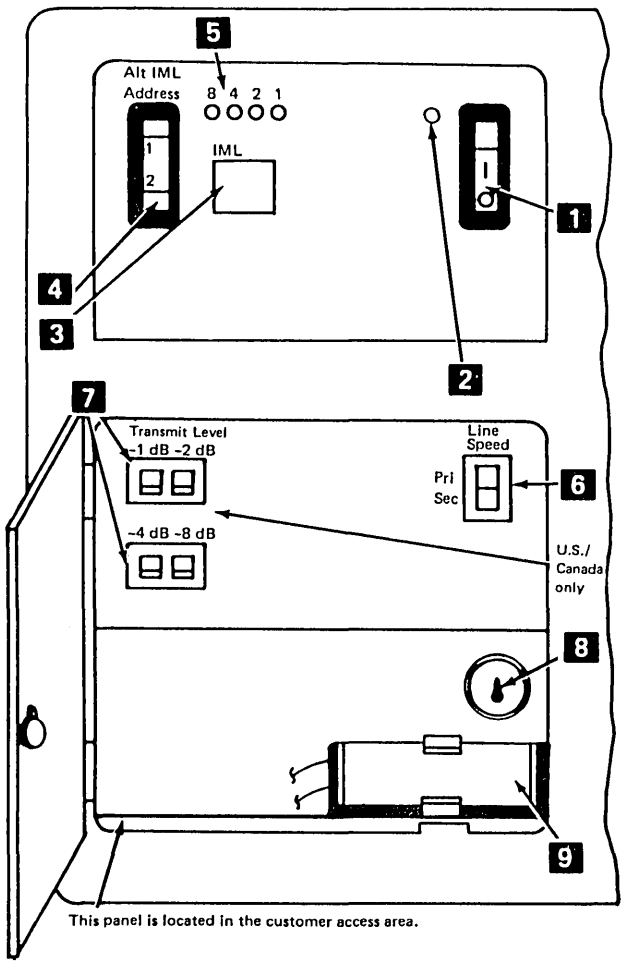

Ref	Description
1	On/Off switch: [1] = On; [O] = Off.
2	On indicator: Indicates the 3274 is on.
3	IML (Initial Machine Load) pushbutton: Pressing and holding causes a basic test to run. When the pushbutton is released, IML tests start. At completion, the machine is loaded.
4	Alt IML Address switch: • 1: Holding, while pressing the IML pushbutton, bypasses the tests and loads the machine directly. Use only after normal IML fails. • 2: Holding, while pressing the IML pushbutton, invokes adapter and wrap tests.
5	8 4 2 1 indicators: These light while the IML pushbutton is held. During IML, they follow the test sequence. At completion, they all go out. During operation, the indicate operational status.

Ref	Description
6	Primary/Secondary Speed Switch – In the Primary position the modem operates at normal speed; in the Secondary position the modem operates at half speed.
7	Transmit Level Attenuation Switches (Switched Network only) – These four switches provide 0 to –15 dB attenuation of the transmit level in 1 dB increments. See the chart in paragraph D.3.3 for the adjustment procedure.
8	Encrypt/Decrypt Key Switch – Allows a new master key to be entered when in the horizontal position.
9	Encrypt/Decrypt Battery – Allows the master key to be maintained in the 3274 when power is off.

Figure D-5. 3274 Operator Panel – Model 51C with 1200-bps Integrated Modem with (1) Switched Line with Manual Auto Answer Feature or (2) Nonswitched Line with SNBU and Manual Auto Answer Feature

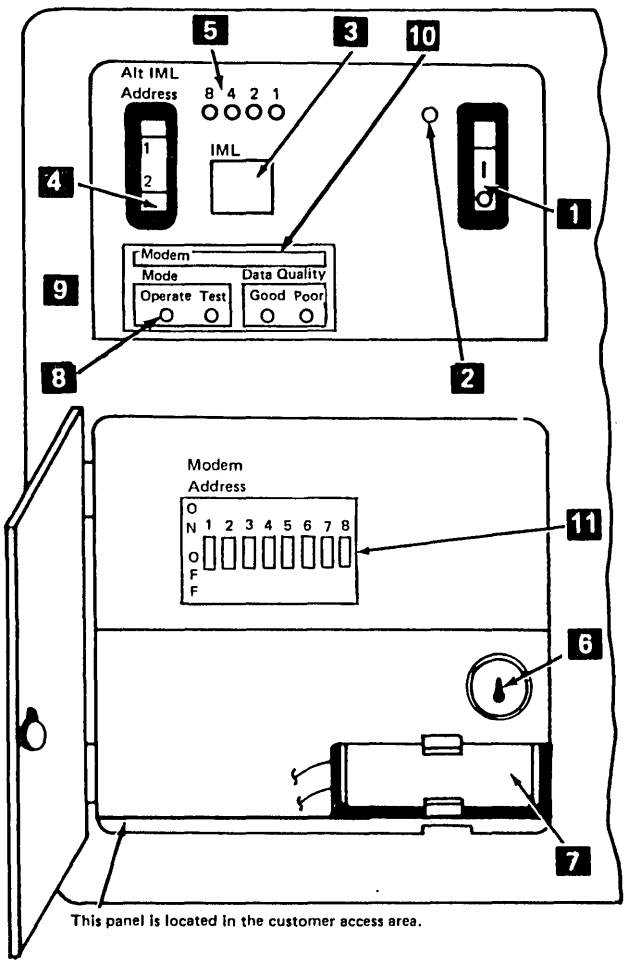

Ref	Description
1	On/Off switch: [1] = On; [O] = Off.
2	On indicator: Indicates the 3274 is on.
3	IML (Initial Machine Load) pushbutton: Pressing and holding causes a basic test to run. When the pushbutton is released, IML tests start. At completion, the machine is loaded.
4	Alt IML Address switch: • Position 1: Holding, while pressing the IBM pushbutton, bypasses the tests and loads the machine directly. Use only after normal IML fails. • Position 2: Holding, while pressing the IML pushbutton, invokes the adapter and wrap test. Holding the Alt IML Address switch in position 2 will cause the modem self-test to be initiated and repeated approximately every 4 seconds, until the switch is released.
5	8 4 2 1 indicators: These light while the IML pushbutton is held. During IML, they follow the test sequence. At completion, they all go out. During operation, they indicate operational status.
6	Encrypt/Decrypt Key Switch — Allows a new master key to be entered when in the horizontal position.
7	Encrypt/Decrypt Battery — Allows the master key to be maintained in the 3274 when power is off.
8	Operate — This indicator shows that the Integrated Modem is ready to exchange data with the attached TP network.
9	Test — This indicator is on when the Integrated Modem is in test mode. Test mode is entered whenever the self-test is running or by a test function being run from the central site modem or when the link problem determination aid (LPDA) host invoked diagnostics are running.
10	Data Quality (Good/Poor) — These indicators light according to the errors detected in the receive signal (caused by TP line quality deterioration). The following chart shows the state of the Data Quality indicators.

Good	Poor[1]	Meaning
On	Off	— Good signal quality (no errors).
Flashing	Off or flashing	— Marginal signal quality (3 bit errors per second).
Off	On or flashing	— Poor signal quality (6 bit errors per second)
Off	Off	— No signal being received.

Ref	Description
11	Modem Address Switches (8) — These eight switches provide the address for host-invoked LPDA diagnostic tests. The address switches should correspond to the 3274 address that was customized.

[1] When running the self-test by using the ALT 2 switch, the Poor indicator should light if the self-test is failing.

Note: *The indicator turns off when the switch is released.*

Figure D-6. 3274 Operator Panel — Model 51C with 2400-, 4800-, or 9600-bps Integrated Modem

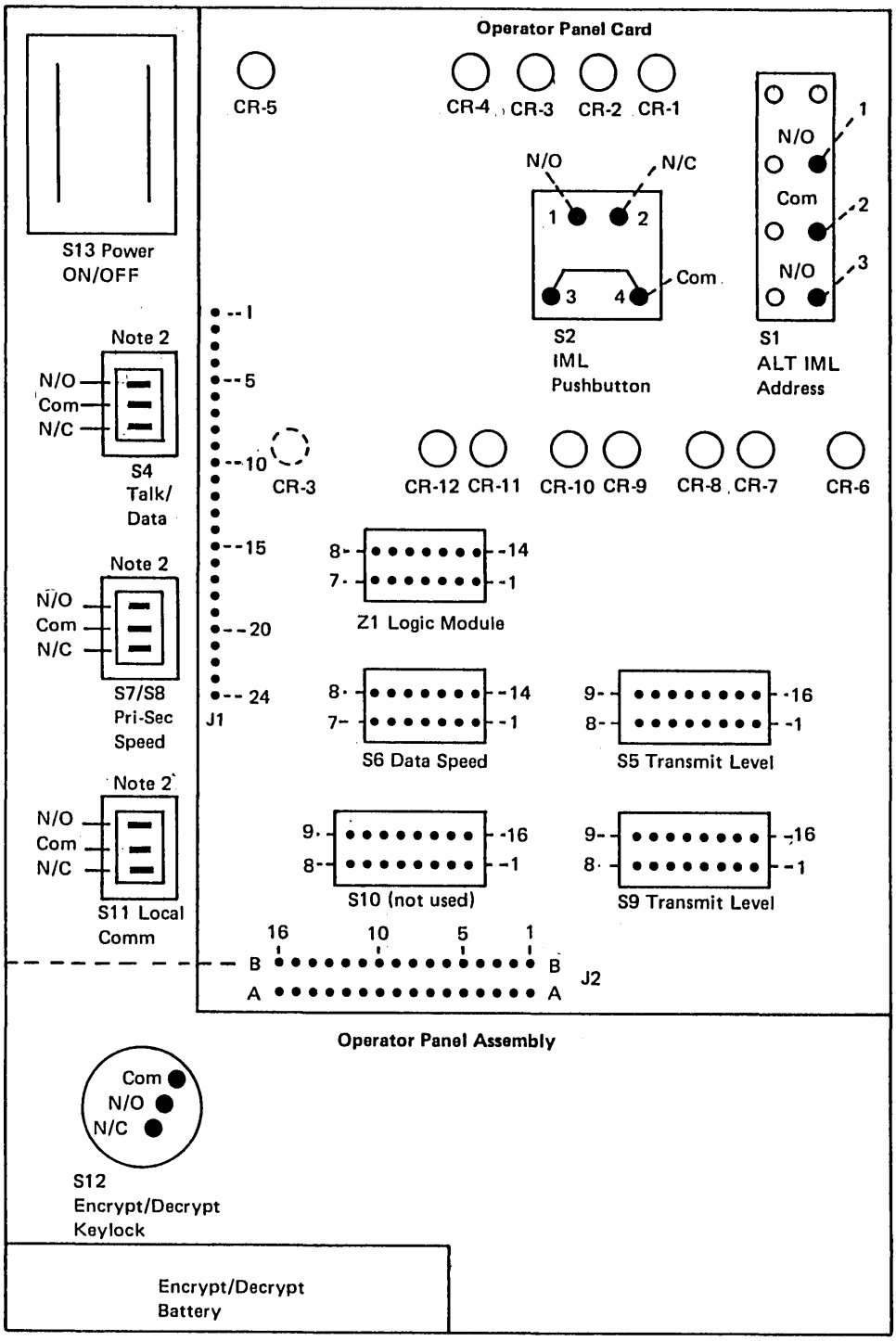

Notes:

1. *Probe Power ON switch S1 at cable termination Plug P2. See Figure B-2.*
2. *Switches S1, S4, S7, S8, and S11—There is continuity between the Com and N/C contacts with the rocker in the position shown to the right.*

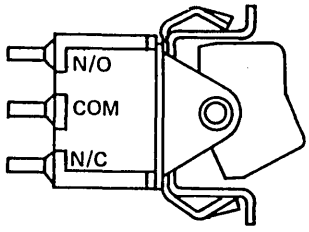

Figure D-7. Operator Panel Component Pin Locations

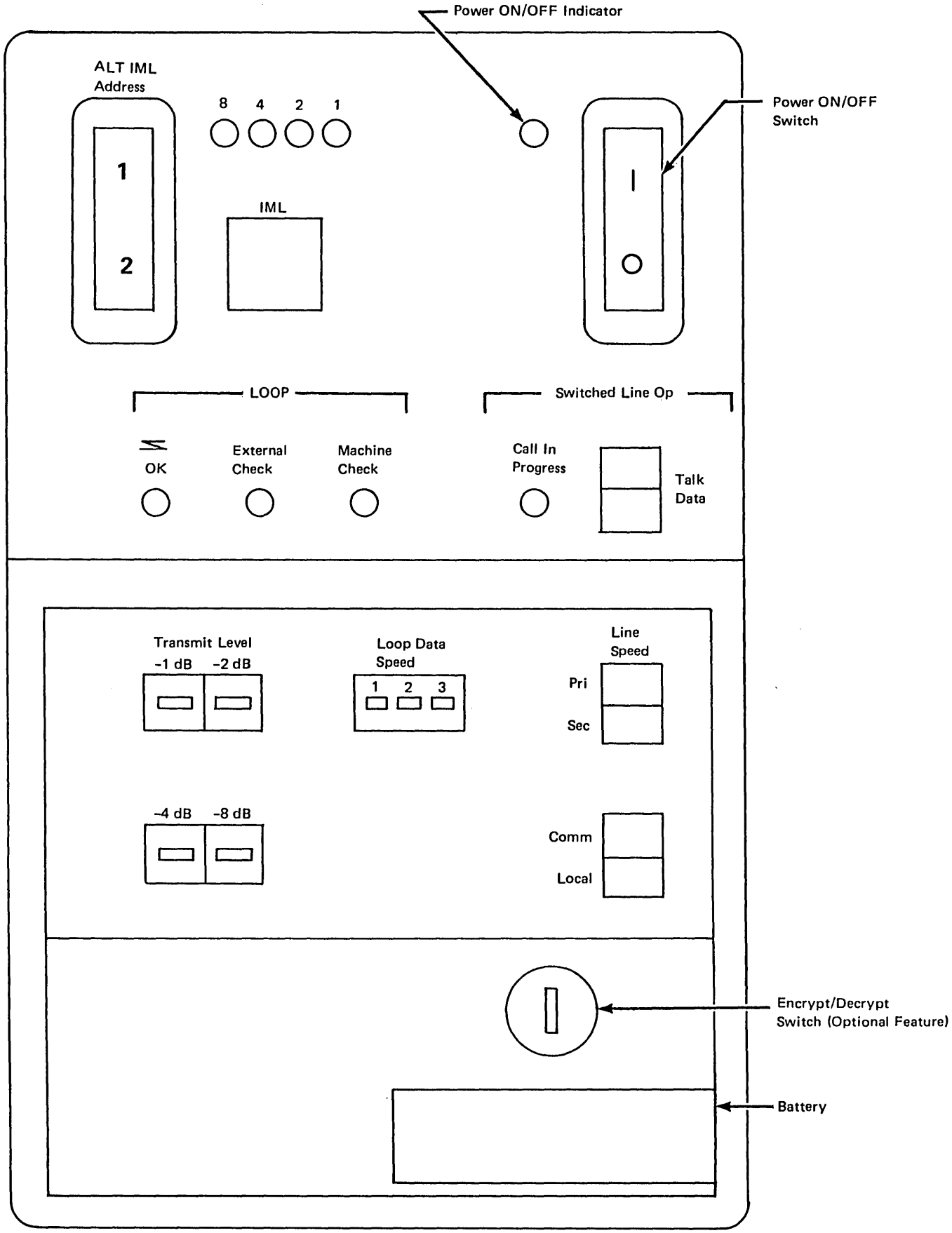

Figure D-8. Operator Panel Locations (without 2400-, 4800-, or 9600-bps Integrated Modem)

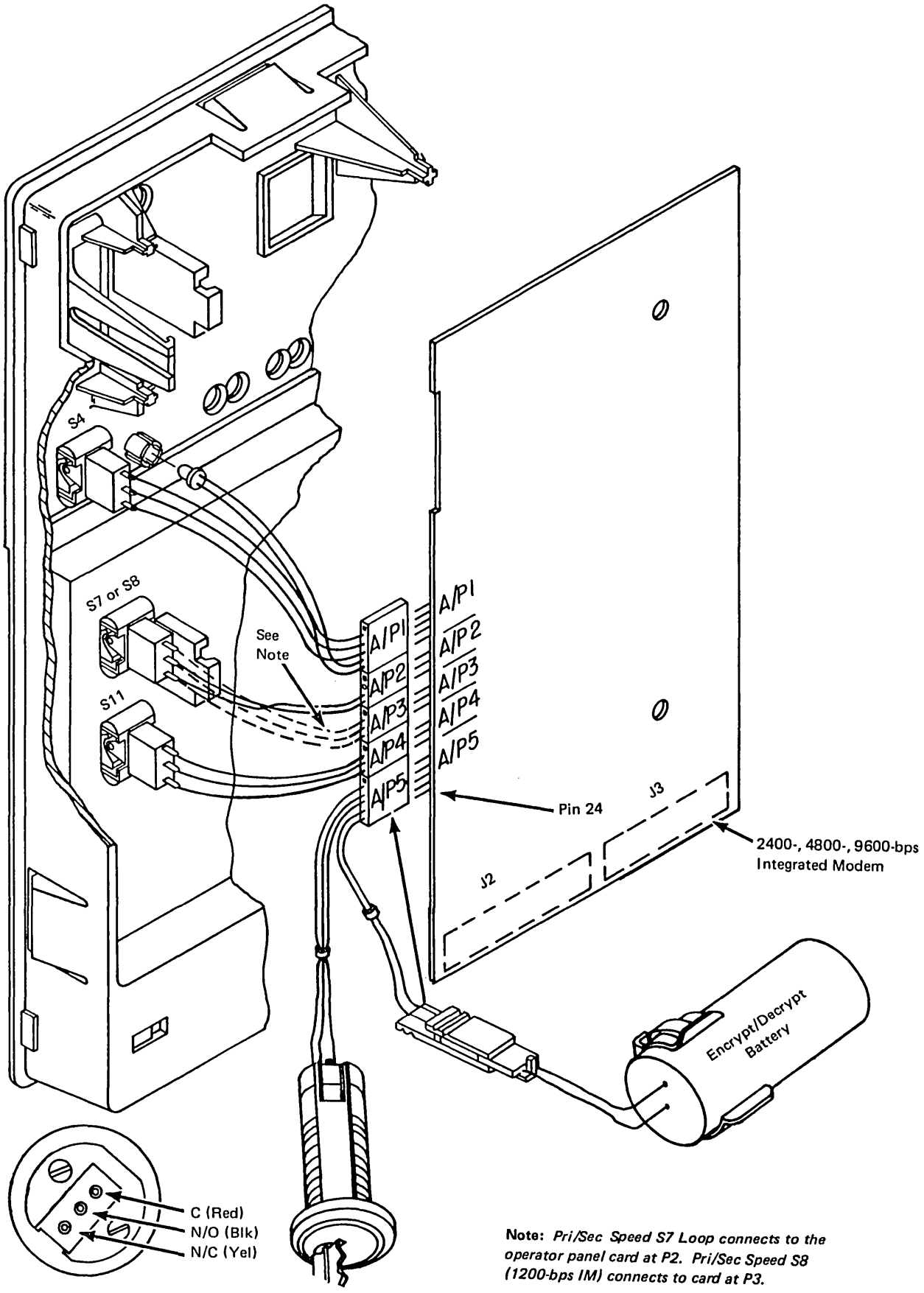

Figure D-9. Operator Panel Assembly Cable Plugging

Appendix E. IBM 31SD Diskette Drive Maintenance

Safety Information

The CE Safety Practices, located at the front of this manual, should be reviewed before you service the 31SD Diskette Drive. To prevent personal injury and machine damage, observe all Danger and Caution notices, making sure you fully understand them.

AC voltages are present on the 31SD drive motor connector and capacitor terminals when the drive motor is running. The motor and the solenoid become hot after continuous use; let the parts cool before attempting servicing. The following Danger and Caution notices appear in this appendix in the sequence shown:

DANGER
Input AC voltage is present in the prime power box when the 3274 I/O (on/off) switch is in the O (off) position.

DANGER
Voltage is still present at the socket when the power cable is disconnected.

DANGER
High voltage may be present at the capacitor terminals.

CAUTION
The motor case becomes hot after continuous use.

This appendix contains the maintenance information needed to service the IBM 31SD Diskette Drive. It includes the service check, adjustment, removal, and replacement procedures for all field replaceable units (FRUs). It also includes information to help the customer engineer diagnose difficult and intermittent failures not found by the maintenance analysis procedures (MAPs).

A paragraph number precedes each paragraph title. These numbers are used as follows:

- The table of contents lists the paragraph numbers and titles.
- The MAPs (Chapter 3, MAP A-40) direct the customer engineer to maintenance procedures by paragraph number (for example, E.3.7.3, E.3.3.6, E.3.6.1).
- Steps in a procedure direct the customer engineer to another procedure by paragraph number.

Other information about the diskette drives is found in:

- Chapter 3, MAP A-40, IBM 31SD Diskette Drive Maintenance Analysis Procedures (MAPs)
- *The IBM Diskette General Information Manual,* GA21-9182

Note: *Tektronix, as used in this appendix, is a trademark of Tektronix, Inc.*

Contents

E.1 Introduction E-3
E.1.1 General Description E-3
E.1.1.1 Diskette Description E-4
E.1.1.2 Diskette Insertion and Removal E-5
E.1.1.3 Maintenance E-6
E.1.1.4 Special Tools E-6
E.1.2 Machine Characteristics E-7
E.1.2.1 Physical Characteristics E-7
E.1.2.2 Electrical Characteristics E-7
E.1.2.3 Environmental Characteristics E-8
E.1.2.4 Functional Characteristics E-8
E.1.3 Safety E-8
E.1.3.1 Personal Safety E-8
E.1.3.2 Machine Safety E-8
E.1.3.3 Diskette Safety E-9
E.1.4 Diskette Drive Parts E-10

E.2 Device Theory of Operation E-13
E.2.1 Control Card Interface E-13
E.2.2 Mechanical Operation E-15
E.2.3 Typical Device Operation E-15
E.2.4 Read/Write Principles E-17
E.2.4.1 Write Data E-17
E.2.4.2 Write Operation E-18
E.2.4.3 Read Data E-19

E.3 Maintenance E-22
E.3.1 Collet/Flat Spring Assembly E-22
E.3.1.1 Collet/Flat Spring Removal E-22
E.3.1.2 Collet/Flat Spring Replacement E-23
E.3.2 Head/Carriage Assembly E-24
E.3.2.1 Head/Carriage Pressure Pad Removal and Replacement E-24
E.3.2.2 Head/Carriage Service Check E-25
E.3.2.3 Head/Carriage Adjustment E-28
E.3.2.4 Head/Carriage Removal E-30
E.3.2.5 Head/Carriage Replacement E-30
E.3.3 Head Load Solenoid and Bail E-34
E.3.3.1 Solenoid and Bail Service Check E-34
E.3.3.2 Head Gap Service Check E-36
E.3.3.3 Head Gap Adjustment E-36
E.3.3.4 Bail Adjustment E-36
E.3.3.5 Bail Removal E-38
E.3.3.6 Bail Replacement E-38
E.3.3.7 Solenoid and Idler Removal E-38
E.3.3.8 Solenoid and Idler Replacement E-38
E.3.4 AC Drive Parts E-41
E.3.4.1 Drive Motor Removal E-41
E.3.4.2 Drive Motor Replacement E-41
E.3.4.3 Capacitor Removal E-41
E.3.4.4 Capacitor Replacement E-41
E.3.4.5 Drive Fan and Pulley Assembly Removal E-43
E.3.4.6 Drive Fan and Pulley Assembly Replacement E-43
E.3.5 Stepper Drive Parts E-43
E.3.5.1 Stepper Motor Removal E-43
E.3.5.2 Stepper Motor Replacement E-43
E.3.5.3 Stepper Pulley and Clamp Removal E-45
E.3.5.4 Stepper Pulley and Clamp Replacement E-45
E.3.5.5 Drive Band Service Check E-45
E.3.5.6 Drive Band Adjustment E-45
E.3.5.7 Drive Band Removal E-45
E.3.5.8 Drive Band Replacement E-46
E.3.6 LED and PTX Assemblies E-48
E.3.6.1 Diskette Speed Service Check E-48
E.3.6.2 LED Output Service Check E-50
E.3.6.3 LED Removal E-50
E.3.6.4 LED Replacement E-51
E.3.6.5 PTX Amplifier Service Check E-51
E.3.6.6 PTX Removal E-53
E.3.6.7 PTX Replacement E-53
E.3.7 Diskette Drive Control Card E-53
E.3.7.1 Control Card Removal E-53
E.3.7.2 Control Card Replacement E-53
E.3.7.3 Control Card Test Pins and Connector Pins E-53

E.1 INTRODUCTION

E.1.1 General Description

The IBM 31SD Diskette Drive is a direct-access, read/write, data storage device. This drive uses the flexible magnetic diskette for data entry, data exchange, and data storage.

The 31SD Diskette Drive, shown in Figure E-1, can read from and write to a diskette 1. The diskette drive reads and writes in frequency modulation (FM) only. If a diskette 2 or a diskette 2D is inserted into a 31SD Diskette Drive, the drive will never come ready.

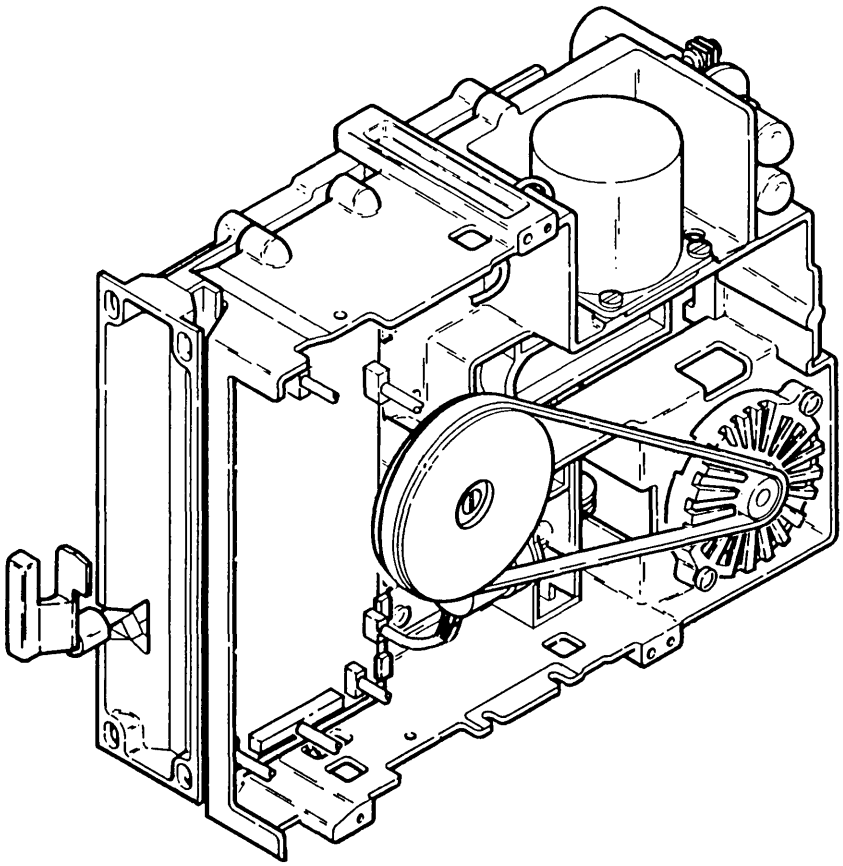

Figure E-1. IBM 31SD Diskette Drive

E.1.1.1 Diskette Description

The IBM 31SD Diskette, shown in Figure E-2, is a thin, flexible disk, permanently protected in a jacket. Information is stored magnetically on the diskette surface, which is covered with magnetic recording material. The diskette is free to turn inside the jacket. As the diskette turns, the inner surface of the jacket cleans the diskette.

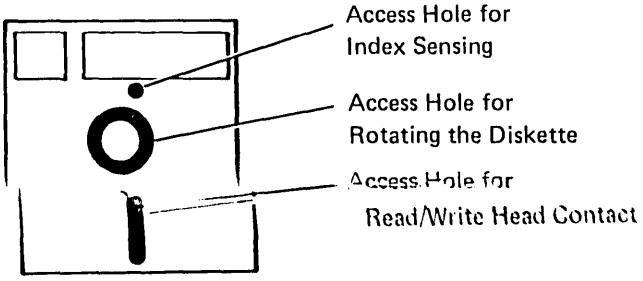

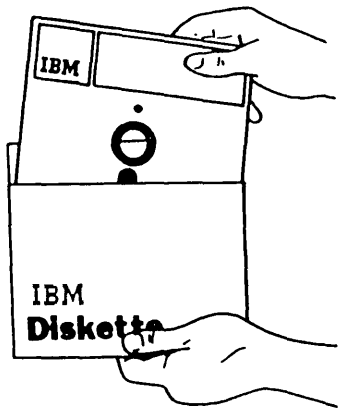

Diskette

The diskette jacket has three holes. The first hole permits the diskette drive to turn the diskette, the second hole permits the read/write head to make contact with the diskette, and the third hole permits the phototransistor light to go through the index hole to sense the type of diskette. For storage, the diskette, which is permanently protected in a thin jacket, can be placed in an envelope. Data can be read from or written on only one side of the diskette.

Information is written on the diskette in tracks. A track is a circular path on the diskette surface. Information is magnetically written to or read from a track by a read/write head as the diskette turns. See Figure E-2.

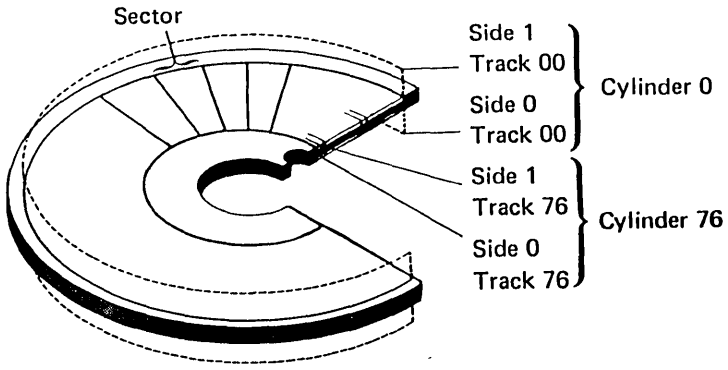

Figure E-2. 31SD Diskette

There are 77 tracks on each side of a diskette. Track 00, which is the outside track, is reserved as a label track and cannot be used for data. Tracks 75 and 76, the two tracks nearest the hub, are reserved as alternative tracks and can be used for data only if another track becomes damaged. There is a total of 74 tracks on one side of a diskette 1 available for recording data.

A sector is that part of a track used for one record of information.

A cylinder is defined as the tracks of a diskette that can be read from or written on without moving the read/write heads.

E.1.1.2 Diskette Insertion and Removal

To insert or remove a diskette, proceed as follows:

A. Diskette Insertion (See Figure E-3)

1. Turn the operator knob to the open position.
2. Remove the diskette from its envelope.
3. Place the diskette squarely into the diskette drive (with the label facing the knob).
4. Turn the operator knob to the closed position.

B. Diskette Removal (See Figure E-3)

1. Turn the operator knob to the open position.
2. Remove the diskette.
3. Insert the diskette into its envelope.

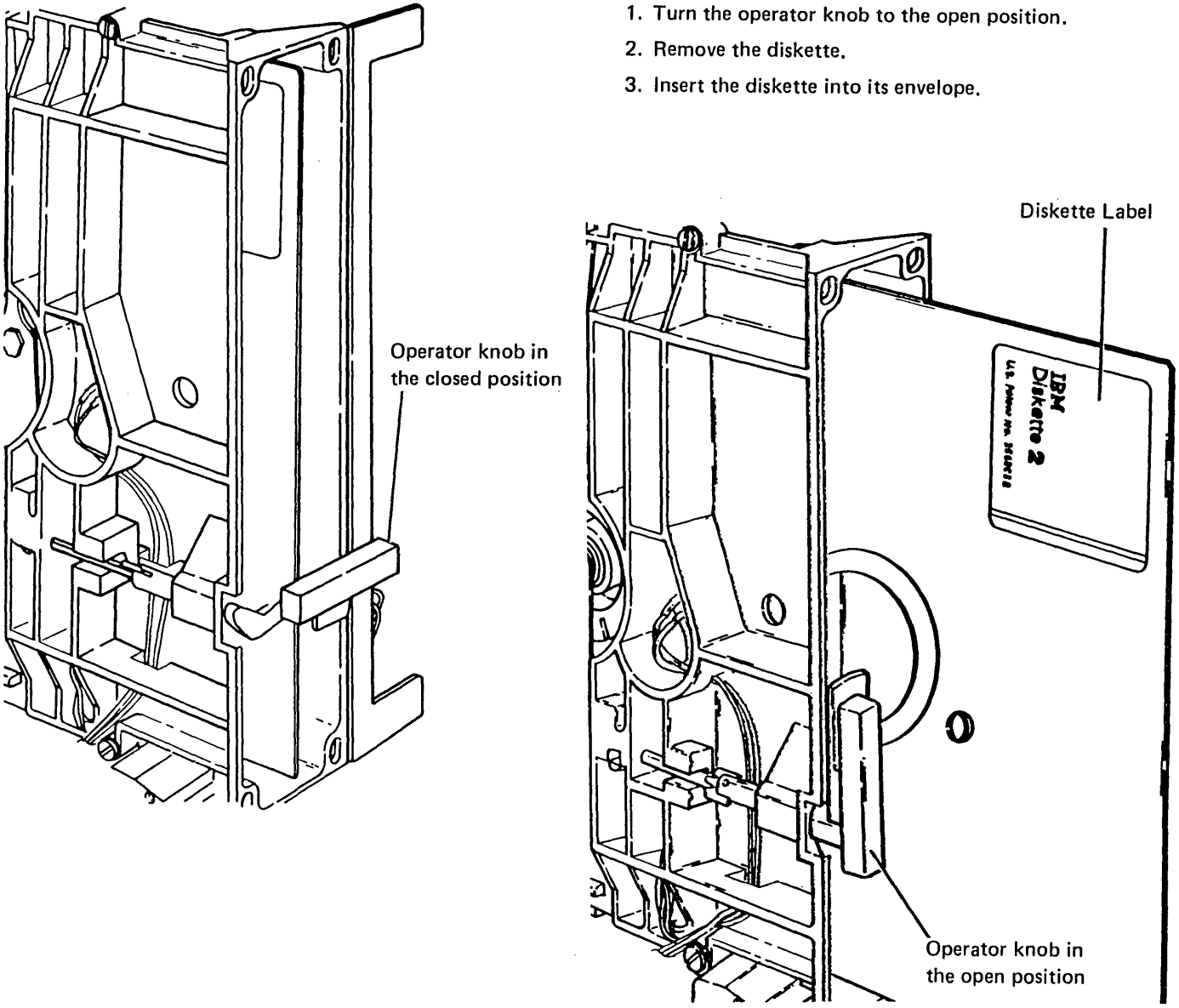

Figure E-3. Diskette Insertion

E.1.1.3 Maintenance

The diskette drive needs no planned maintenance. The MAPs guide the CE in diagnosing diskette drive failures; the MAPs also send the CE to maintenance procedures in this appendix when an adjustment, service check, or FRU replacement is needed.

The CE should verify a repair online using the system or device diagnostic programs.

The head/carriage assembly and the drive hub and pulley assembly are adjusted and tested at the factory. The head/carriage assembly can be exchanged in the field; the drive hub and pulley assembly cannot be exchanged in the field. If the track 40 adjustment surface or the drive hub and pulley assembly is damaged, the diskette drive should be exchanged.

E.1.1.4 Special Tools

The CE must use the following special tools (shown in Figure E-4):

- Timing pin (B) (part 5562019) to adjust or service the read/write head/carriage stepper motor pulley. (This part is supplied with each drive.)
- Force gauge (part 460870), (A), to adjust or service-check the drive band tension.
- Spring (part 4240631), (D), to keep the head/carriage in place against the thickness gauge when performing the head/carriage adjustments. (This part is supplied with each drive.)

  Note: *Spring must match view,* (E).

- Clip (part 4240632), (C), to keep the thickness gauge in contact with the track 40 adjustment surface.

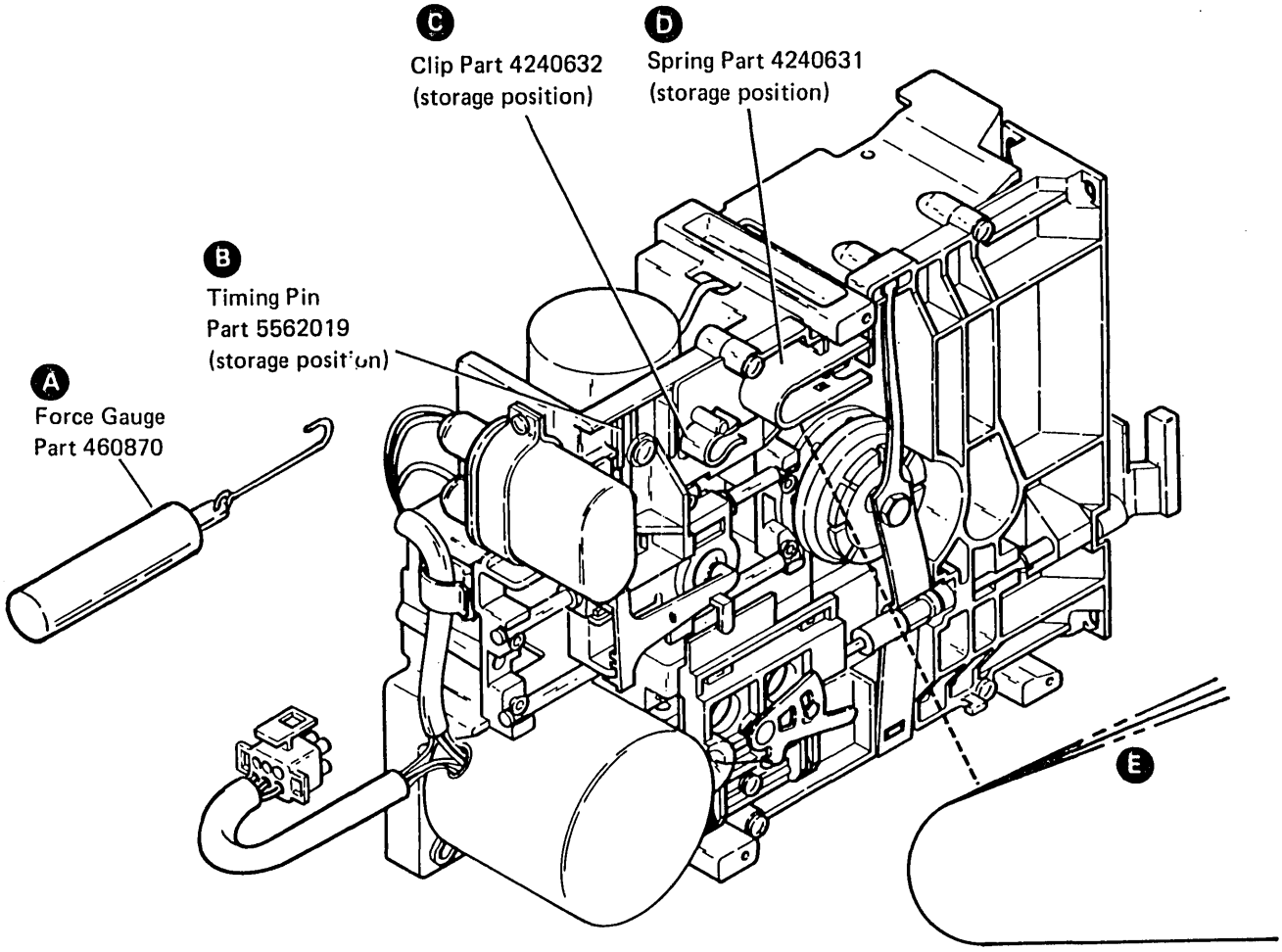

Figure E-4. 31SD Special Tools

E.1.2 Machine Characteristics

E.1.2.1 Physical Characteristics

The 31SD diskette weighs 5.0 kg (11.0 pounds) and has a speed of 360 rpm. See Figure E-5 for other physical characteristics.

E.1.2.2 Electrical Characteristics

The system supplies all the power needed to operate the diskette drive, which includes:

- All the following:

Logic Voltage (dc)	Maximum Operating Current (A)	Tolerance (%)
-5	0.08	±10
+5	0.50	±10
+24	0.50	±12

- A selection of the needed ac power from the following lists:

  -60 Hz, single-phase, ac power

Input Voltage (V)	Input Voltage Range	Average Operating Current (A)
100	90-110	0.30
110	96.5-119	0.30
120	104-127	0.30
127	111-137	0.30
200	180-220	0.20
208	180-220	0.20
220	193-238	0.20
240	208-254	0.20

-50 Hz, single-phase, ac power

Input Voltage (V)	Input Voltage Range	Average Operating Current (A)
100	90-110	0.30
110	96.5-119	0.30
200	180-220	0.25
220	193-238	0.20
230	202-249	0.20
240	210-259	0.20

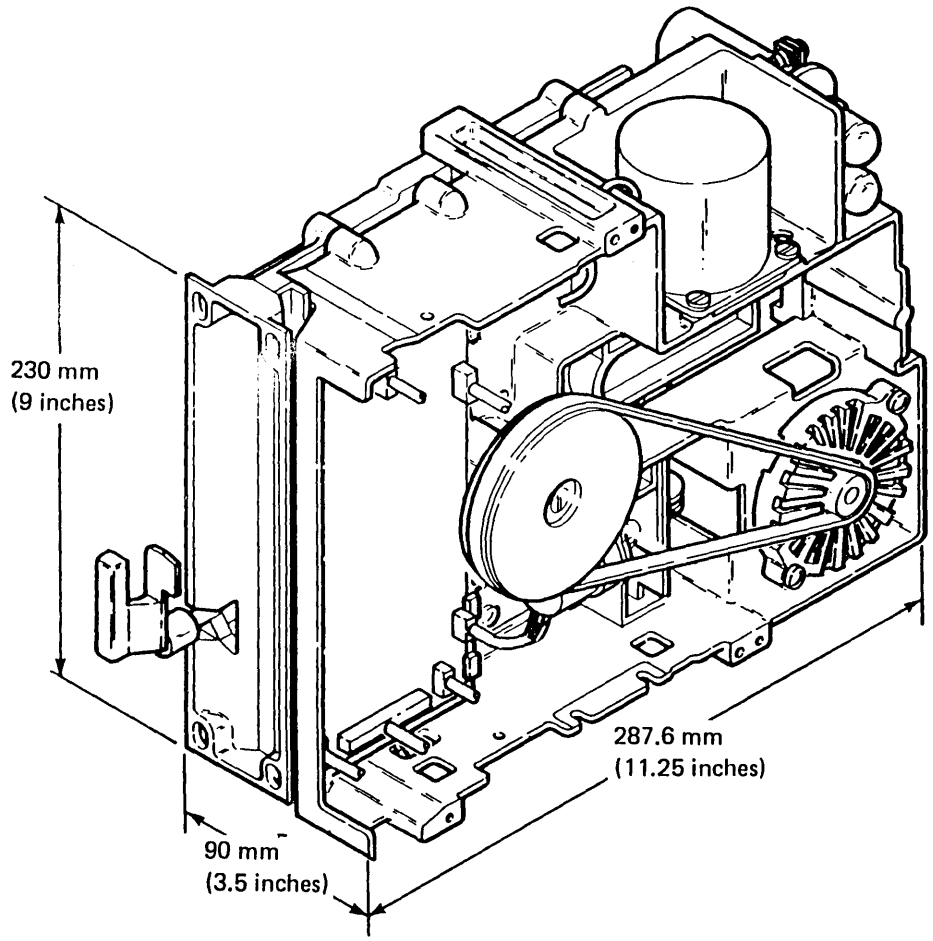

Figure E-5. 31SD Physical Characteristics

E.1.2.3 Environmental Characteristics

IBM diskette drives can be operated or stored in the following temperature and humidity ranges, shown in Figure E-6.

E.1.2.4 Functional Characteristics

The format of the data on a diskette is changed when the number of bytes written in a sector is changed. Diskettes are used with the formats shown in Figure E-7.

- The maximum number of formatted data bytes per diskette is shown in Figure E-8.
- Data rate: 250,000 bits (31,250 bytes) per second (FM).
- Cylinder-to-cylinder seek time: 5 ms, plus 35 ms for the head/carriage assembly to stop. (The total seek time is the number of cylinders the heads moved across multiplied by 5 ms, plus 35 ms.)
- Tracks per diskette side: 77 (cylinder 00 is the label cylinder; cylinders 01 through 74 are for data; cylinders 75 and 76 are reserved as alternative cylinders).

	Temperature		Relative Humidity
	Celsius	Fahrenheit	
Operate (Powered On)	10° to 40.6°	50° to 105°	8% to 80%
Store (Powered Off)	10° to 51.7°	50° to 125°	8% to 80%

Figure E-6. Environmental Characteristics

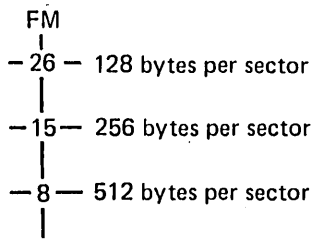

Figure E-7. Data Formats

E.1.3 Safety

E.1.3.1 Personal Safety

The system or device supplies ac and dc power. Ac voltages are present on the drive motor connector and capacitor terminals in the diskette drive when the drive motor is turning.

Motor and solenoid cases become hot after continuous use; let the parts cool before servicing them.

The Danger and Caution notices throughout this appendix are personal safety precautions.

E.1.3.2 Machine Safety

Diskette drives can be damaged if they are not operated or serviced correctly. The Warning notices in this appendix are machine safety precautions.

Do not use IBM cleaning fluid or other cleaning fluids near plastic parts.

Never use damaged diskettes in a diskette drive. Diskettes that are physically damaged (creased or bent) or contaminated (by pencil marks, finger marks, or cleaning fluid) can cause data errors, equipment errors, or head damage.

	Diskette 1
128 Bytes per Sector	246,272[1]
256 Bytes per Sector	284,160
512 Bytes per Sector	303,104

[1] The total number of data bytes that can be stored on the diskette. The Basic Data Exchange Standards for exchanging information from one system to another using diskette 1 are:

- Use 128 bytes per sector.
- Do not use track 74.
- Use 26 sectors per track.

The total number of usable data bytes then becomes 242944.

Figure E-8. Maximum Number of Formatted Data Bytes

E.1.3.3 Diskette Safety

Return a diskette to its envelope when it is removed from the diskette drive.

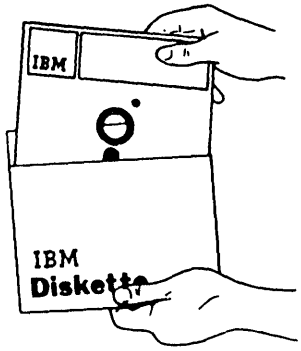

Do not lay diskettes near smoke or other sources that can cause the disk to become contaminated.

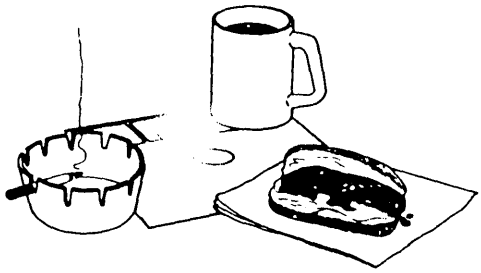

Do not use clips or rubber bands on a diskette.

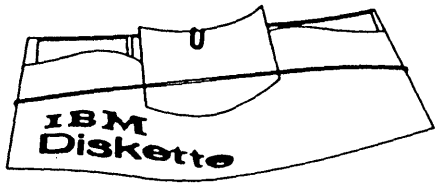

Do not place heavy books on diskettes.

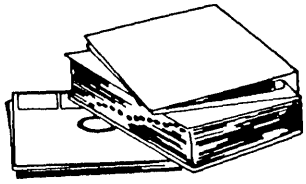

Do not touch or attempt to clean diskette surfaces. Contaminated diskettes will not function correctly.

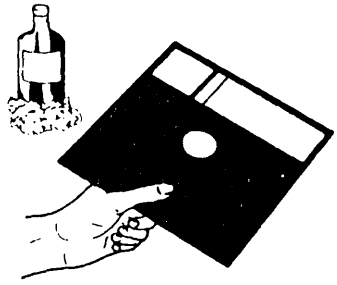

Do not place diskettes near magnetic materials. Data can be lost from a diskette exposed to a magnetic field.

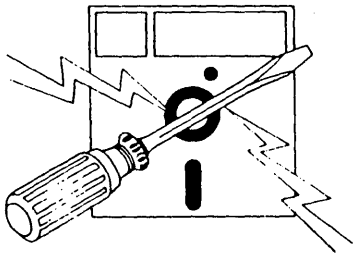

Do not expose diskettes to heat greater than 51.7° C (125°F) or direct sunlight.

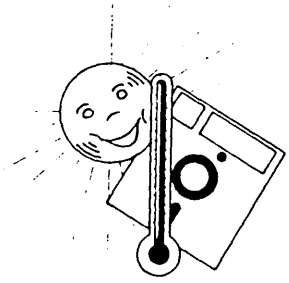

Do not write outside the label area on diskettes.

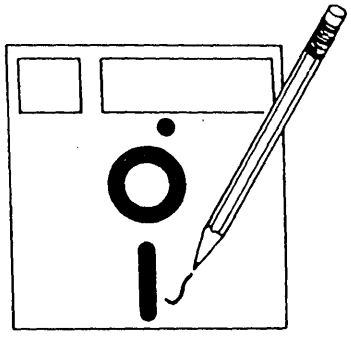

E.1.4 Diskette Drive Parts

Diskette drive parts are shown in Figure E-9.

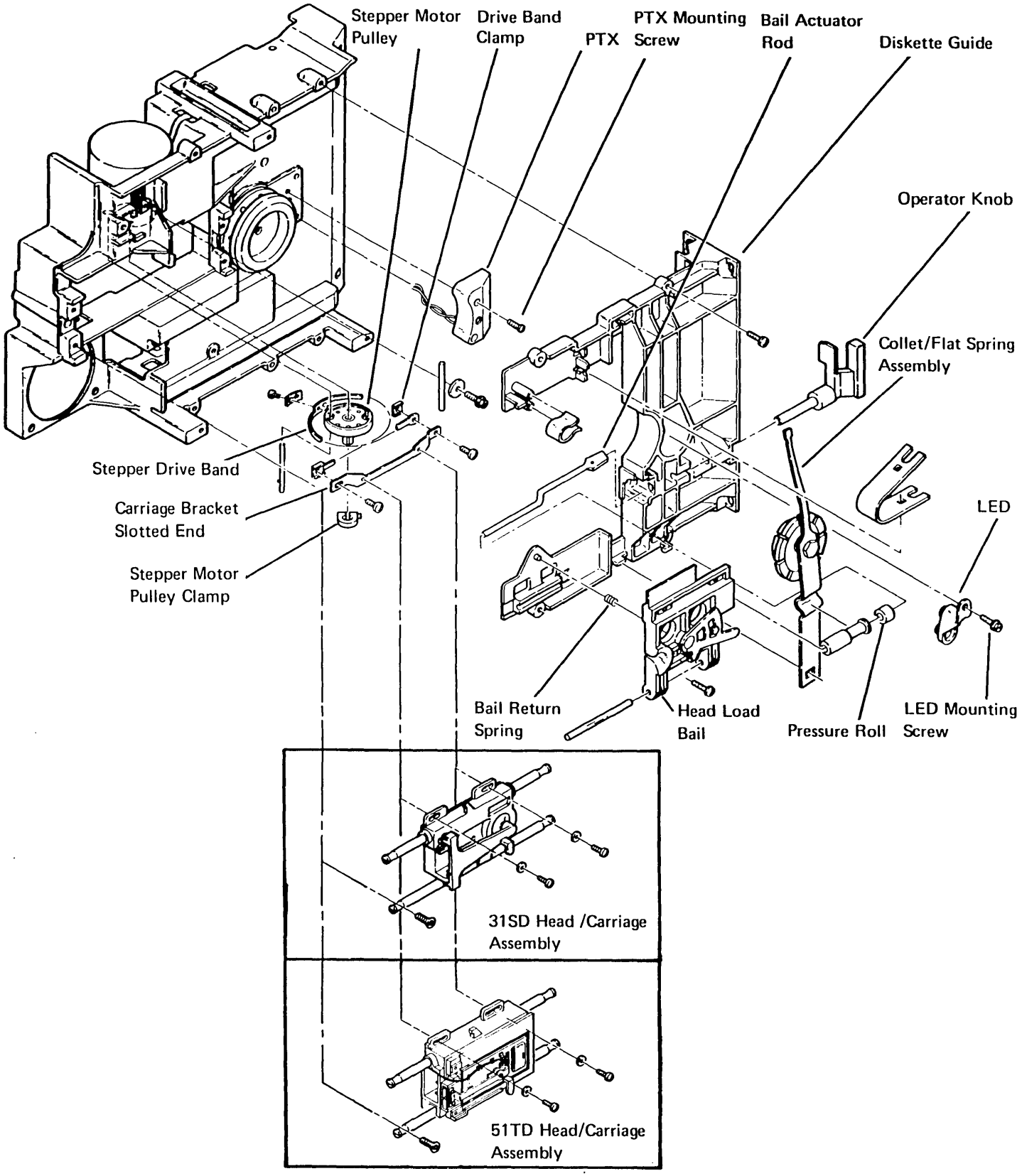

Figure E-9 (Part 1 of 4). Diskette Drive Parts

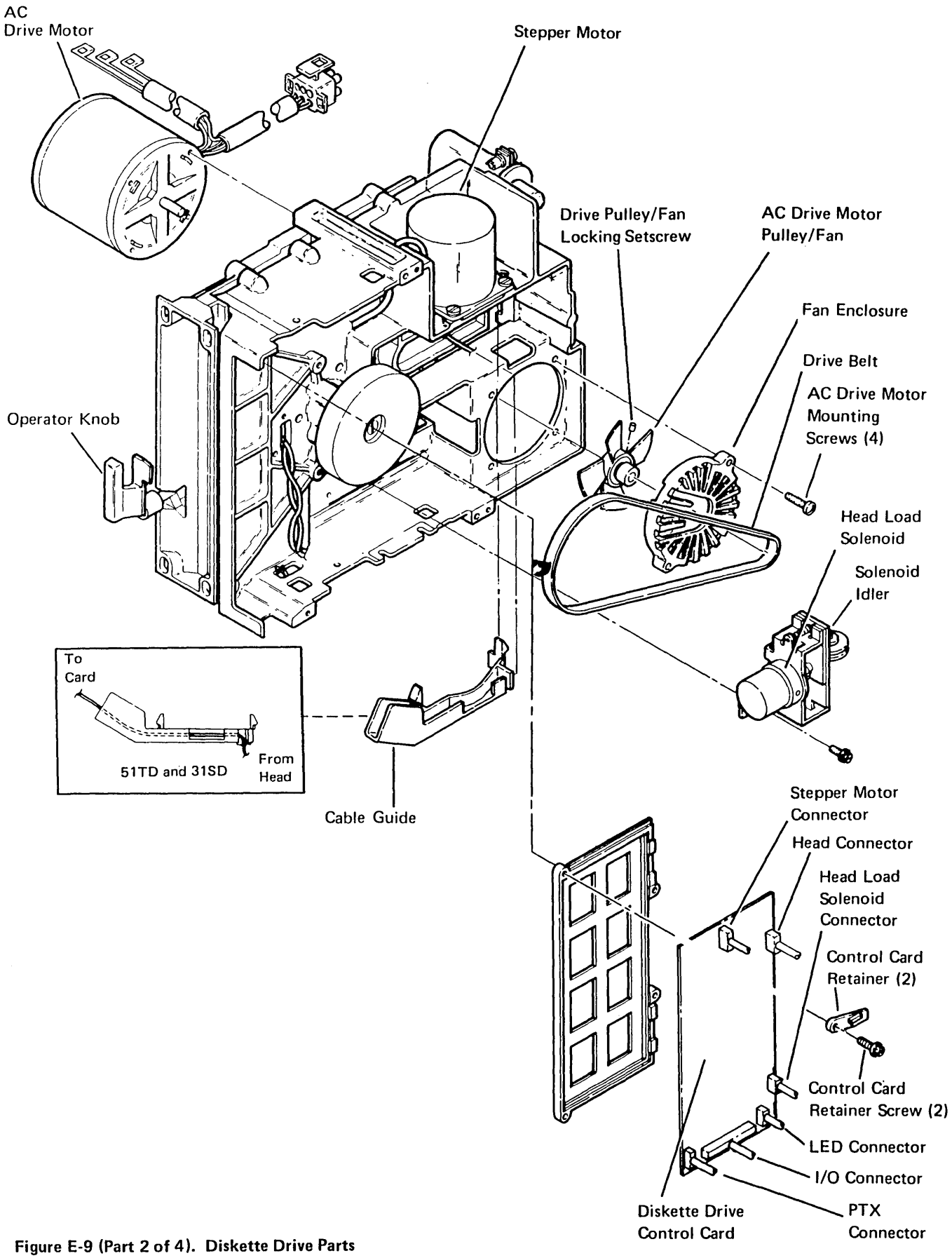

Figure E-9 (Part 2 of 4). Diskette Drive Parts

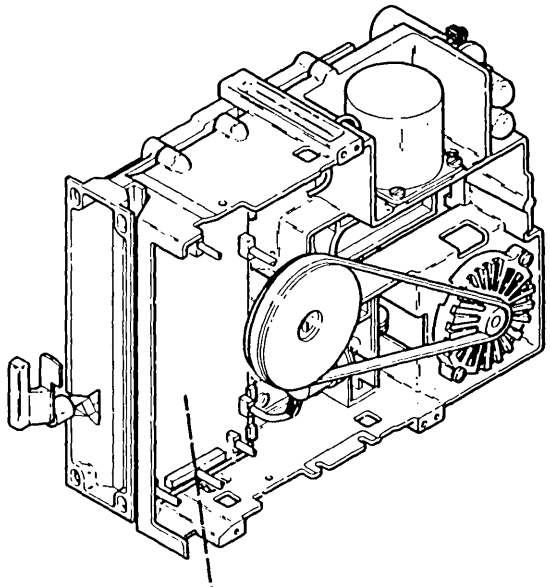

31SD Control Card

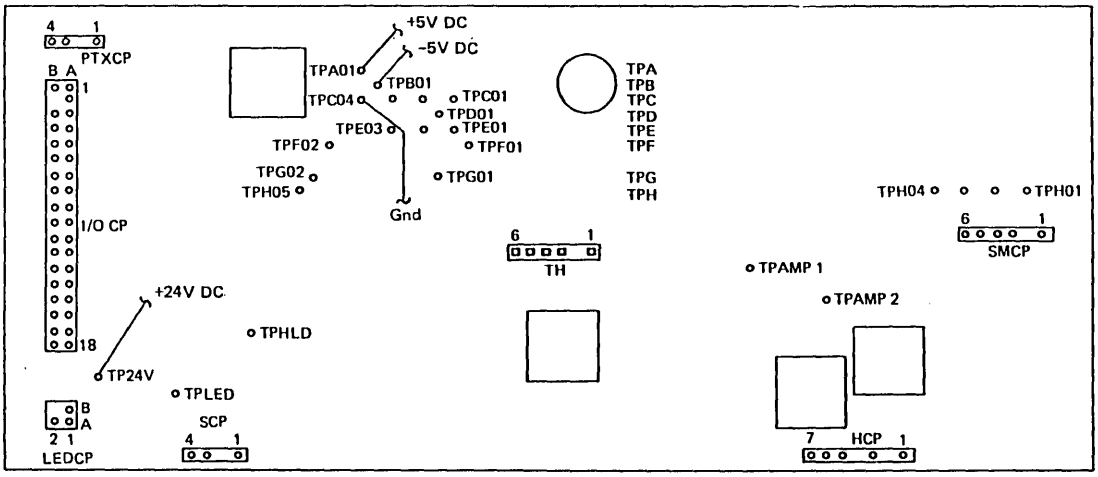

Figure E-9 (Part 3 of 4). Diskette Drive Parts

31SD Control Card Cable

Test Points	Line Names
TH01	Diff Read B
TH02	No Pin
TH03	Diff Read A
TH04	Not Assigned
TH05	-Disable Stepper Motor
TH06	+18V

Test Points	Line Names
TPA01	+5 Vdc
TPB01	-5 Vdc
TPC01	+Access 1
TPC02	D1 PTX
TPC03	Write Data
TPC04	Ground
TPD01	+Inner Tracks
TPE01	+Access 0
TPE02	+Head Engage
TPE03	+Index
TPF01	Ground
TPF02	+Write/Erase Enabled

Test Points	Line Names
TPG01	+File Data
TPG02	+Erase Gate
TPH01	MC-3
TPH02	MC-2
TPH03	MC-1
TPH04	MC-0
TPH05	+Write Gate
TPAMP1	Preamp TP1
TPAMP2	Preamp TP2
TPHLD	-Head Load
TP24V	+24 Vdc
TPLED	31SD LED Voltage

PTXCP – PTX Connector Pins
I/O CP – I/O Connector Pins
LEDCP – LED Connector Pins
SCP – Solenoid Connector Pins
HCP – Head Connector Pins
SMCP – Stepper Motor Connector Pins

Figure E-9 (Part 4 of 4). Diskette Drive Parts

E.2 DEVICE THEORY OF OPERATION

The 31SD Diskette Drive is an I/O device that relies on the using system for power, commands, and control. The drive can read from, and write to one side of, a diskette. This section contains theory information about the device interface, data flow, and operation of the diskette drive.

E.2.1 Control Card Interface

Cylinder access is shown in Figure E-10; the interface lines at connector A1 are shown in Figure E-11.

Following is a description of the interface lines at connector A1:

Write Data: For each change of this signal, the current switches in the read/write head. This process records the data on the diskette surface.

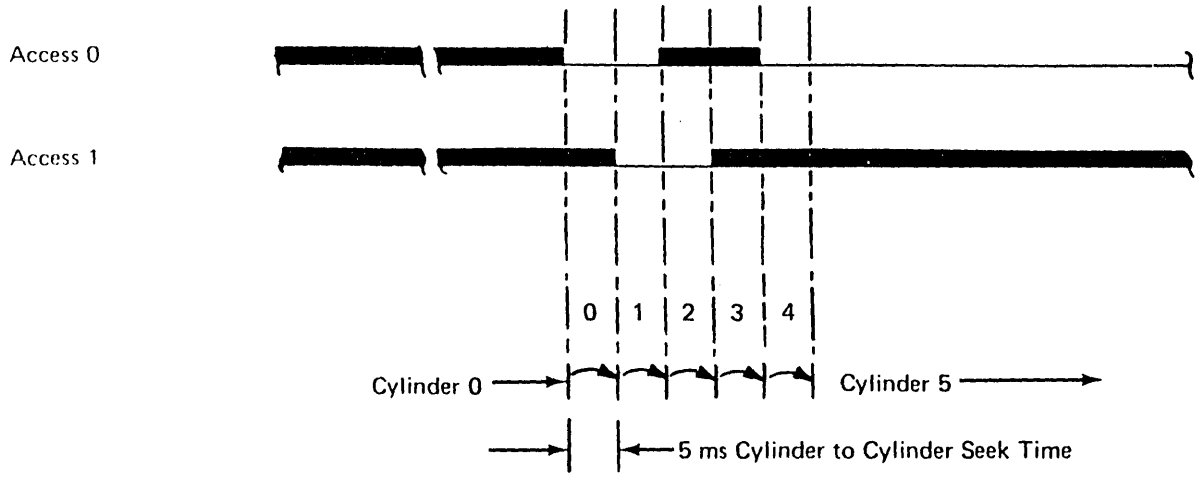

Figure E-10. Cylinder Access

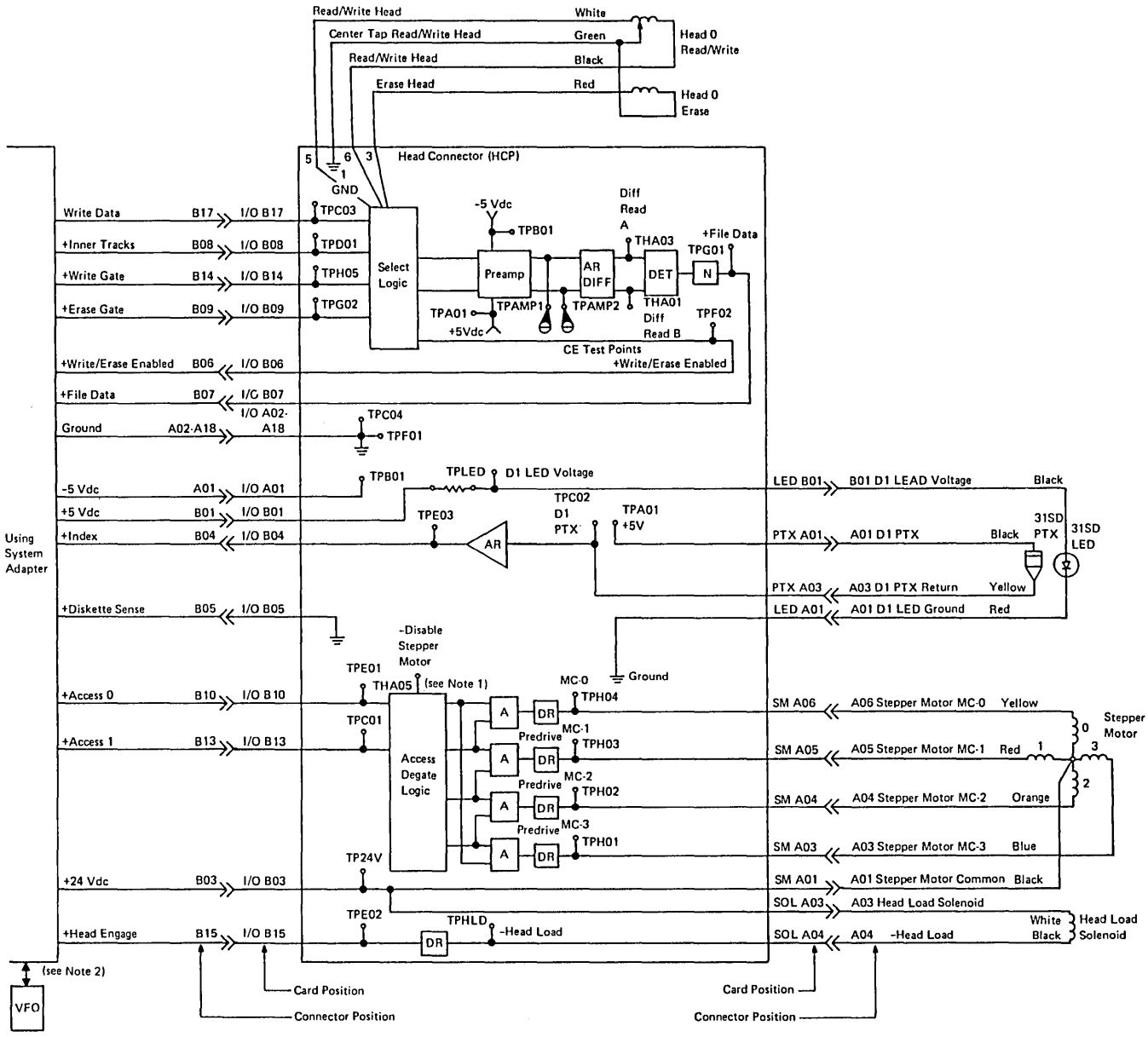

Notes:

1. *A jumper from ground to disable stepper motor overrides any input access lines. This is used in making head/stepper motor adjustments.*
2. *The variable frequency oscillator is packaged in the using system logic. The function of the variable frequency oscillator is to separate and clock pulses.*

Figure E-11. Control Lines at Connector A1

+Inner Tracks: This line is active from track 43 through track 76. When this line is active, the write current through the data head is decreased, because the bit density increases toward the center tracks and, therefore, less write current is needed.

+Write Gate: This line activates the write circuits and deactivates the read circuits for a write operation.

+Erase Gate: This line activates the tunnel erase circuits during a write operation to erase the edges of the track just recorded. This erasing prevents crosstalk between tracks during later read operations.

+Write/Erase Enabled: When this line is active, either write or erase current has been enabled on the card.

File Data: This line is a series of clock and data pulses that represent the data read from the diskette surface. The VFO circuits supplied by the using system separate the clock pulses from the data pulses.

+Index: This line indicates the start of a track. This 1.5 to 3.0 ms pulse occurs every 166.7 ms.

Diskette Sense: This line is tied to ground to always indicate a diskette 1.

Access Lines 0 and 1: Sequentially activating the access signal lines causes the read/write head to move from one cylinder to the next. Note, in Figure E-10, that the sequence is repeated every four cylinders.

These two access signal lines, 0 and 1, are sequentially activated to cause the head to move in (toward the drive hub) or out (away from the drive hub).

+Head Enagage: When it is active, this line loads the read/write head.

E.2.2 Mechanical Operation

Figure E-12 shows the operation of the read/write head on the 31SD Diskette Drive.

The operation of the 31SD is similar to that shown in Figure E-12, but has only one head.

- The diskette is ready to be inserted, **1** .
- The diskette is inserted into the diskette guide, **2** ; the operator closes the knob, which clamps the collet (R/W heads are now much nearer to the diskette).
- The head is loaded (touching the diskette), **3** . The solenoid is activated, the cable pulls the bail, and the bail lowers the head to the diskette.
- Read/Write operation takes place. The heads are moved to the desired cylinder on the disk when the system activates the two stepper motor access lines in a specific sequence.
- The head is released (deactivate the solenoid), **4** .
- The operator turns the knob to the open position; the diskette is released and then removed from the drive, **5** .

E.2.3 Typical Device Operation

Figure E-13 shows the sequence of diskette operation.

1. The host system starts the diskette drive motor.
2. The operator inserts a diskette and turns the operator knob to the closed position. With the operator knob in the closed position, the diskette starts turning, and the read/write heads move into position on the diskette surface (see paragraph E.2.2 for mechanical operation).
3. Index pulses are sensed every revolution (166.7 ms).
4. The using system sequentially activates the two access lines to move the head/carriage assembly in (toward the hub) or out (away from the hub) to select the desired cylinder. Then the system sequentially activates the access lines to turn the stepper motor a distance equal to one cylinder. The two access lines last used to move the head/carriage to the desired cylinder remain active, **B** . Data from the selected cylinder is valid after 40 ms (minimum time for the head and carriage assembly to stop).
5. A head load command can be given before or during a seek to activate the head load solenoid. Data is valid 80 ms after the head is loaded. Address bytes of the first available ID (identifier) field are read, which locates the head in the correct position.
6. Reading or writing can occur 40 ms after seeking to the last cylinder, **A** , or 80 ms after the heads are loaded.
7. The read/write head is unloaded after the read or write operation.

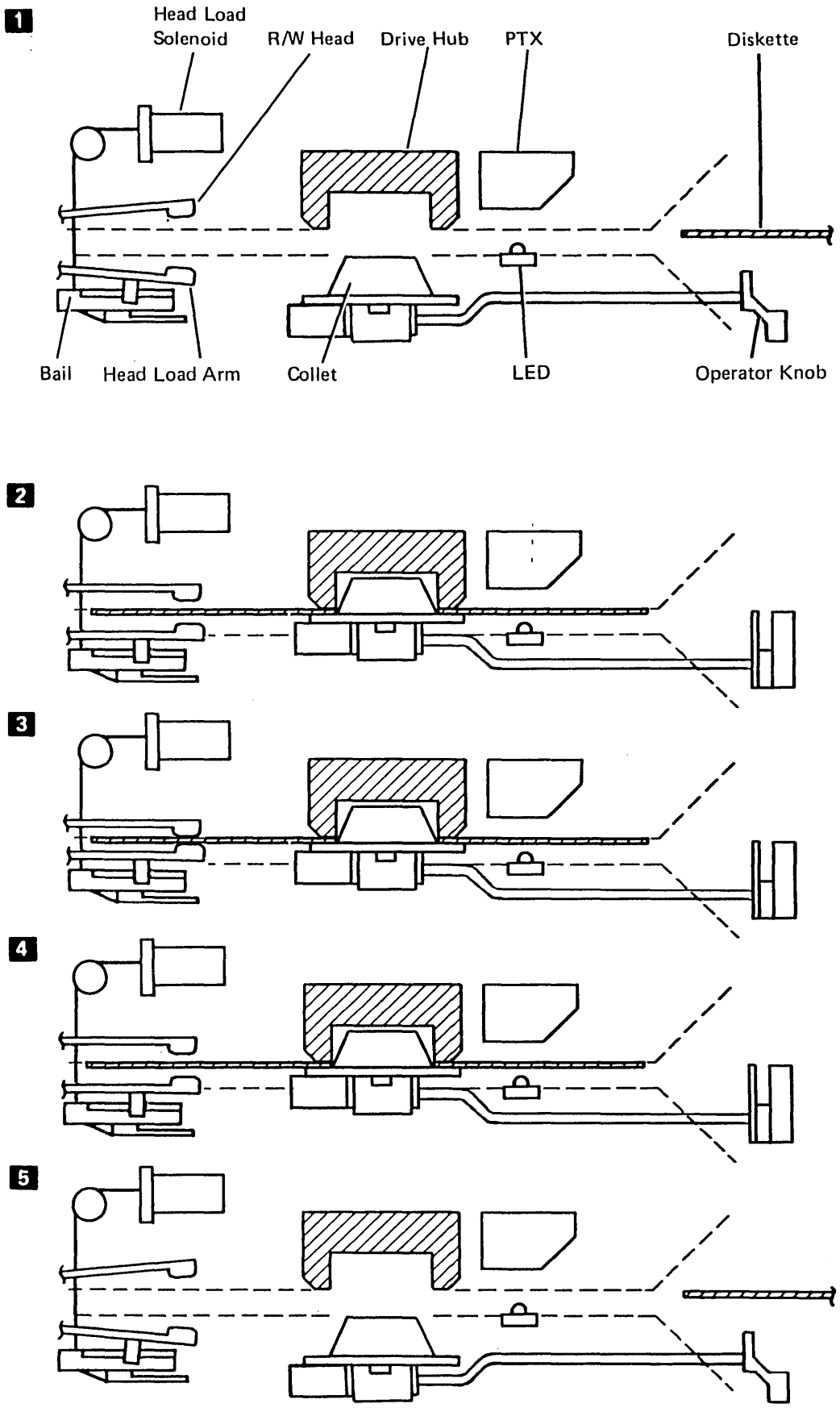

Figure E-12. Diskette Insertion and Head Load Operation

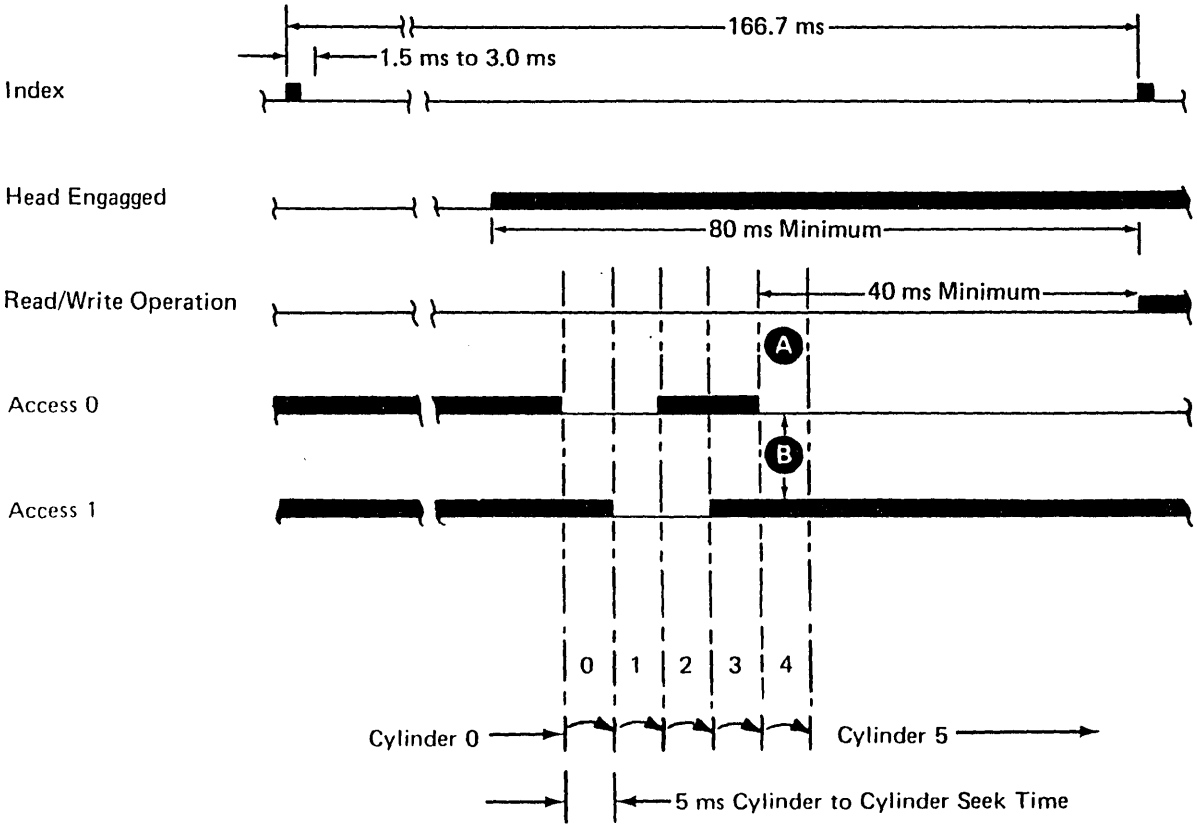

Note: *Seeking and head loading are not to the index.*

Figure E-13. Diskette Operation Sequence

E.2.4 Read/Write Principles

E.2.4.1 Write Data

For each change of the write data signal, the current switches in the read/write head. This process records the data on the diskette surface.

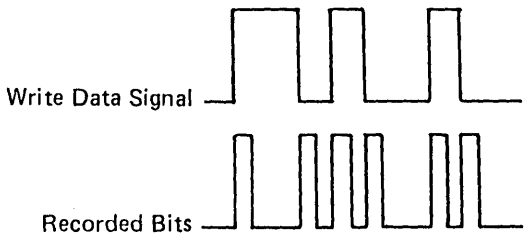

FM Encoding: Writes data bits 4 μs apart. They are recorded on the diskette as follows:

Data Bit to Be Recorded	Recorded As: Clock Bit	Data Bit
1	1	1
0	1	0

Data bits 0101 appear as follows:

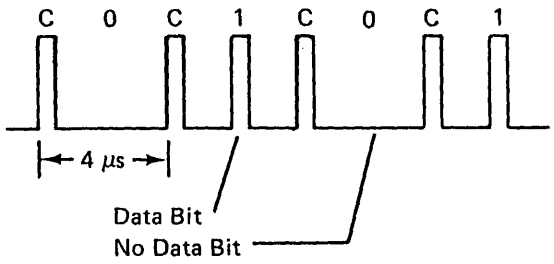

E.2.4.2 Write Operation

For a write operation (Figure E-14), the write-gate signal activates the write circuits and deactivates the read circuits, (E).

The erase-gate signal activates the tunnel erase circuits during a write operation to erase the edge of the data track, (F), just recorded. This erasing process prevents crosstalk between tracks during later read operations.

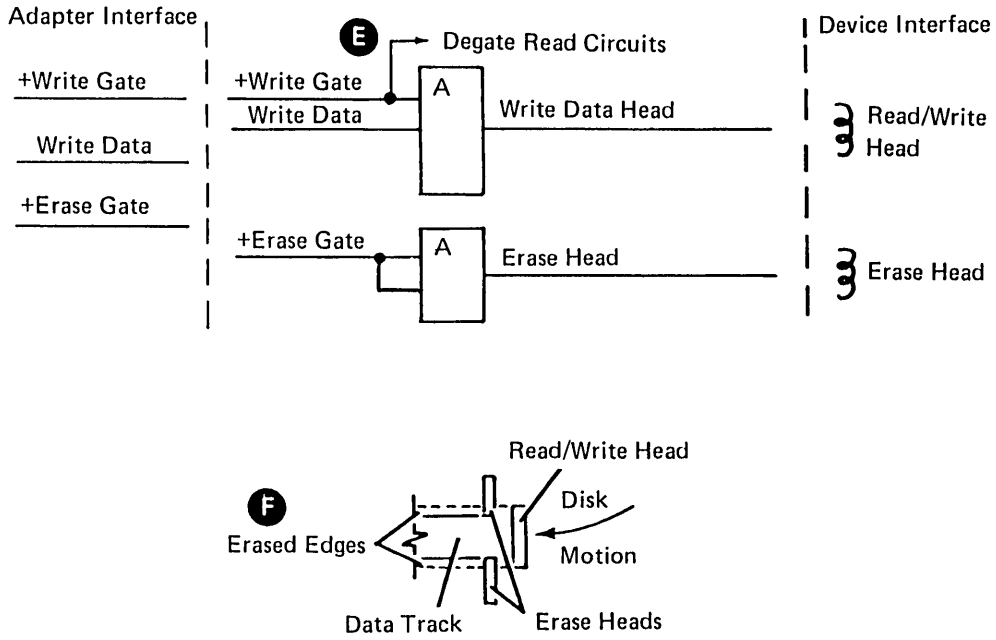

Figure E-14. Write Operation

Format Write Operation: Writes a full track exchanging all the identifier (ID) fields, data fields, and gaps. The index to the first ID field gap is 79 eight-bit bytes.

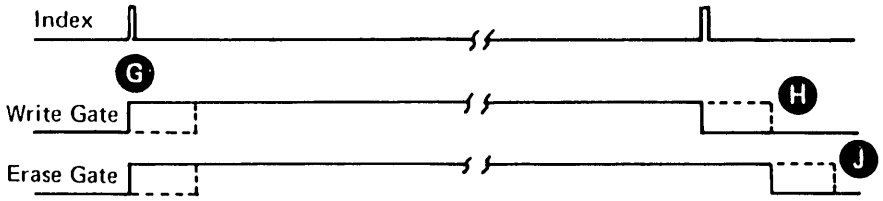

The write-gate signal is activated any time between the leading edge of the index pulse, (G), and 50 bytes after the leading edge of the index pulse. The write-gate signal is deactivated approximately 51 bytes after the leading edge of the next index pulse, (H).

The erase-gate signal is activated at the same time as the write-gate signal, but is deactivated 537 μs after the write-gate signal is deactivated (J).

Record (Update) Write Operation: Performed on a data field and its VFO sync field only. ID fields and gaps are not written. See Figure E-15.

The write-gate line is activated 316 μs after the last ID character is read, (K). The line is deactivated 5 μs after the last clock of the 2-bit pad is written, (L).

The erase-gate line is activated, (M), 221 μs after the write-gate line and is deactivated, (N), 537 μs after the fall of the write-gate line.

The writing of the new VFO sync field starts when the write-gate line is activated, (P).

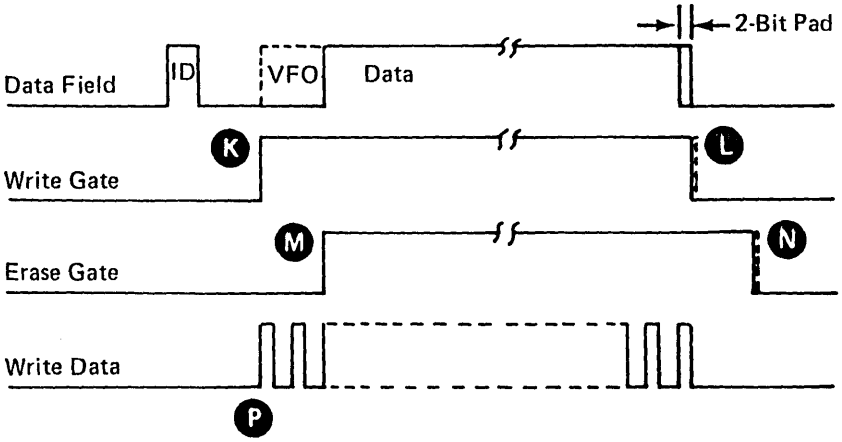

Figure E-15. Record Update — Write Operation

E.2.4.3 Read Data

Read data is the FM encoded read head signal that can be observed at TPAMP1 and TPAMP2. See Figures E-16 through E-20.

Typical measurements for FM encoding are:

125 kHz: 120 to 300 mV (all 0's)
250 kHz: 100 to 250 mV (all 1's)

The voltage is higher at the outer tracks because of the higher track speeds and lower bit density.

READ DATA : MFM ENCODED (51TD ONLY)

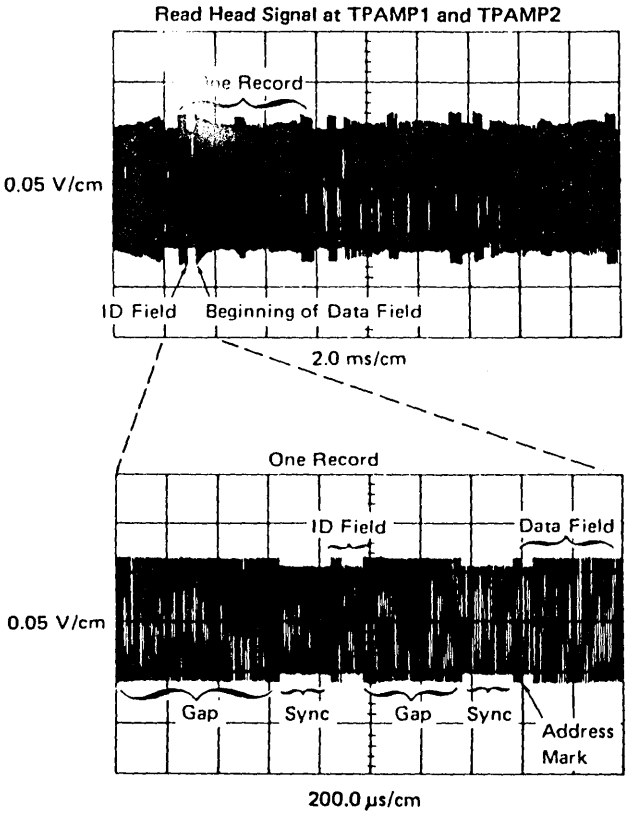

Figure E-16. Read Data Signals

SCOPE SETUP

Note: *Use Tektronix 453, 454, or similar oscilloscope with x10 probes.*

Channel A sweep mode	Normal
Channel A level	+
Channel A coupling	DC
Channel A slope	+
Channel A source	External
Trigger	Normal
Mode	Add
Channel 1 volts/ division	5 mV/cm
Channel 2 volts/division	5 mV/cm
Channel 1 input	AC
Channel 2 input	AC
Invert	Pull out
Times per division	2 ms/cm
Connect channel 1 to	TPAMP1
Connect channel 2 to	TPAMP2
Connect trigger to	+Index test pin
Observe: The amplitude of the read signal should be between 6.5 to 560 mV.	

MFM FILE DATA

Bit Pattern: Hex E5E5

Example; 0101111001

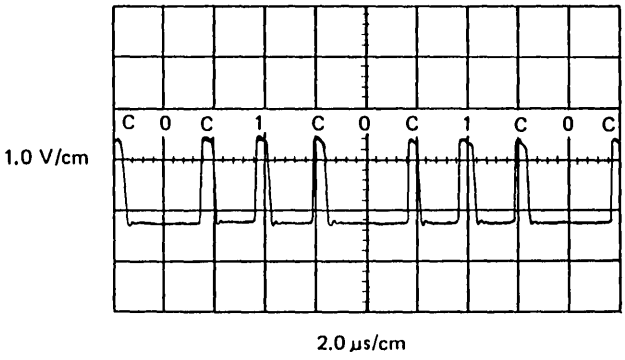

SCOPE SETUP

Note: *Use Tektronix 453, 454, or similar oscilloscope with x10 probes.*

Channel A sweep mode	Normal
Channel A level	+
Channel A coupling	DC
Channel A slope	+
Channel A source	External
Trigger	Normal
Mode	Channel 1
Channel 1 volts/division	1.0V/cm
Channel 1 input	DC
Times per division	2 μs/cm
Connect channel 1 to	+File data
Connect trigger to	+Index test pin
Observe: Clock or data pulses every 2 to 4 μs. Pulse duration should be between 100 and 500 ns. Pulse amplitude should be between 2.4 and 4.2 volts.	

Figure E-17. File Data Signals

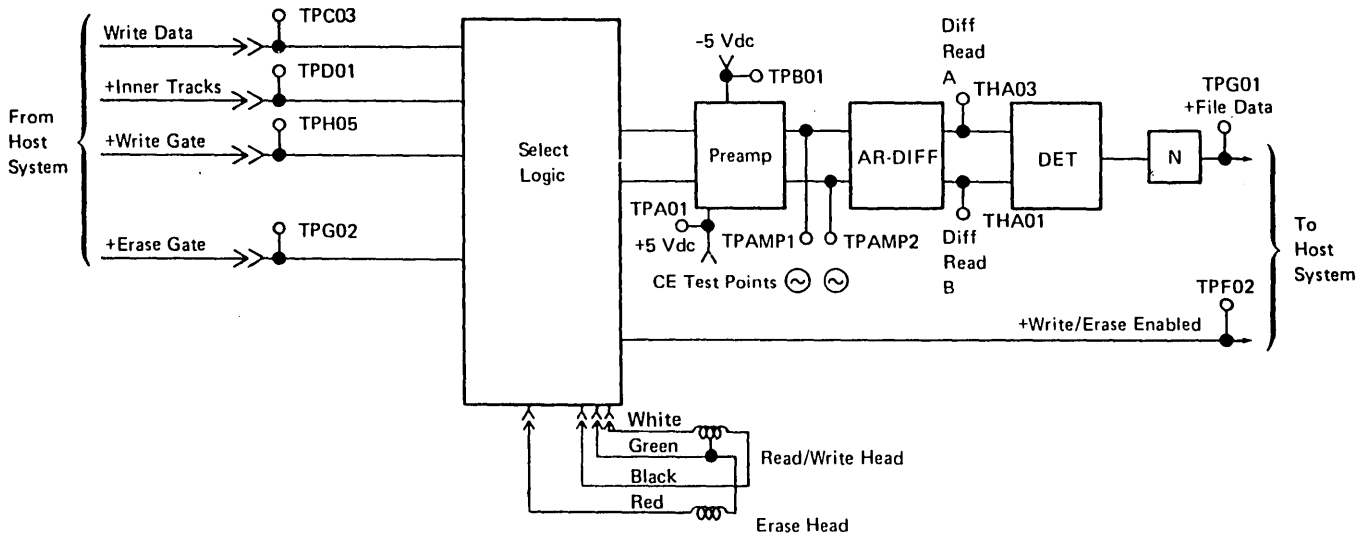

Figure E-18. 31SD Test Pins

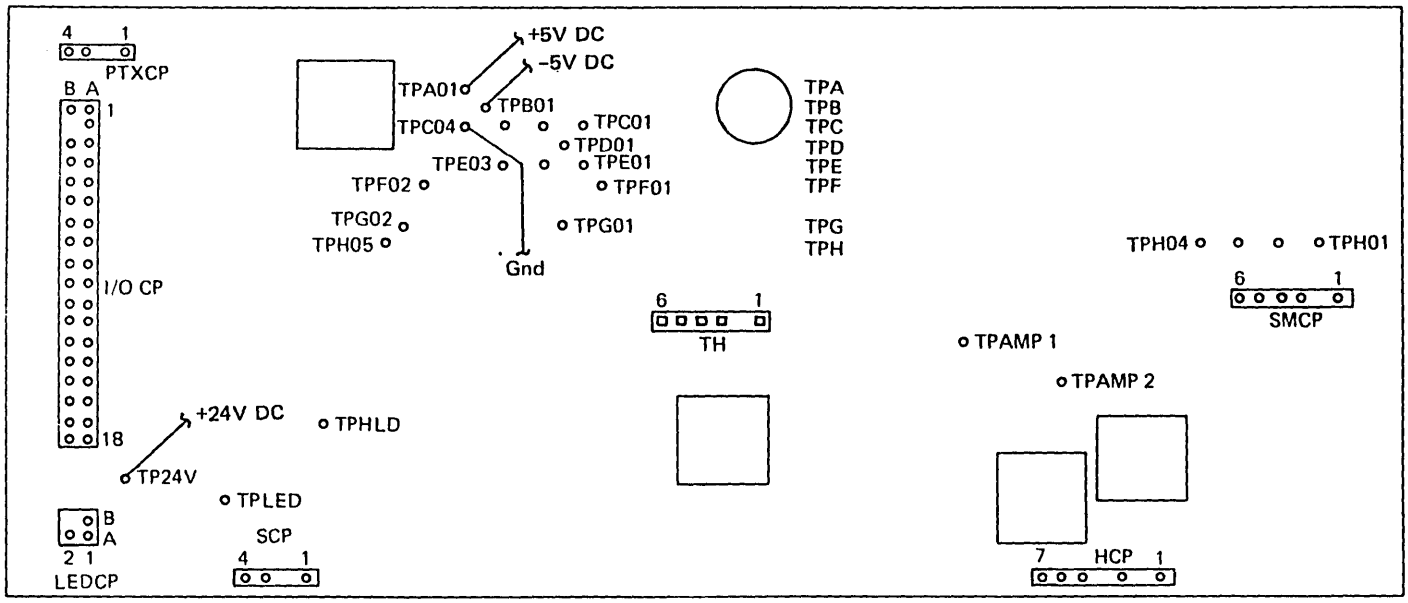

Figure E-19. 31SD Control Card

PTXCP – PTX Connector Pins
I/O CP – I/O Connector Pins
LEDCP – LED Connector Pins
SCP – Solenoid Connector Pins
HCP – Head Connector Pins
SMCP – Stepper Motor Connector Pins

Test Points	Line Names
TH01	Diff Read B
TH02	No Pin
TH03	Diff Read A
TH04	Not Assigned
TH05	-Disable Stepper Motor
TH06	+18V

Test Points	Line Names
TPA01	+5 Vdc
TPB01	-5 Vdc
TPC01	+Access 1
TPC02	D1 PTX
TPC03	Write Data
TPC04	Ground
TPD01	+Inner Tracks
TPE01	+Access 0
TPE02	+Head Engage
TPE03	+Index
TPF01	Ground
TPF02	+Write/Erase Enabled

Test Points	Line Names
TPG01	+File Data
TPG02	+Erase Gate
TPH01	MC-3
TPH02	MC-2
TPH03	MC-1
TPH04	MC-0
TPH05	+Write Gate
TPAMP1	Preamp TP1
TPAMP2	Preamp TP2
TPHLD	-Head Load
TP24V	+24 Vdc
TPLED	31SD LED Voltage

Figure E-20. 31SD Control Card Cable

E.3 MAINTENANCE

E.3.1 Collet/Flat Spring Assembly

E.3.1.1 Collet/Flat Spring Removal

See Figure E-21 (2 parts).

1. Power down.
2. Turn the operator knob, (F), to the closed position.

Warning: Do not attempt to remove the collet/flat spring, (E), before removing the bail, (L). Too much pressure or binding can damage the spring.

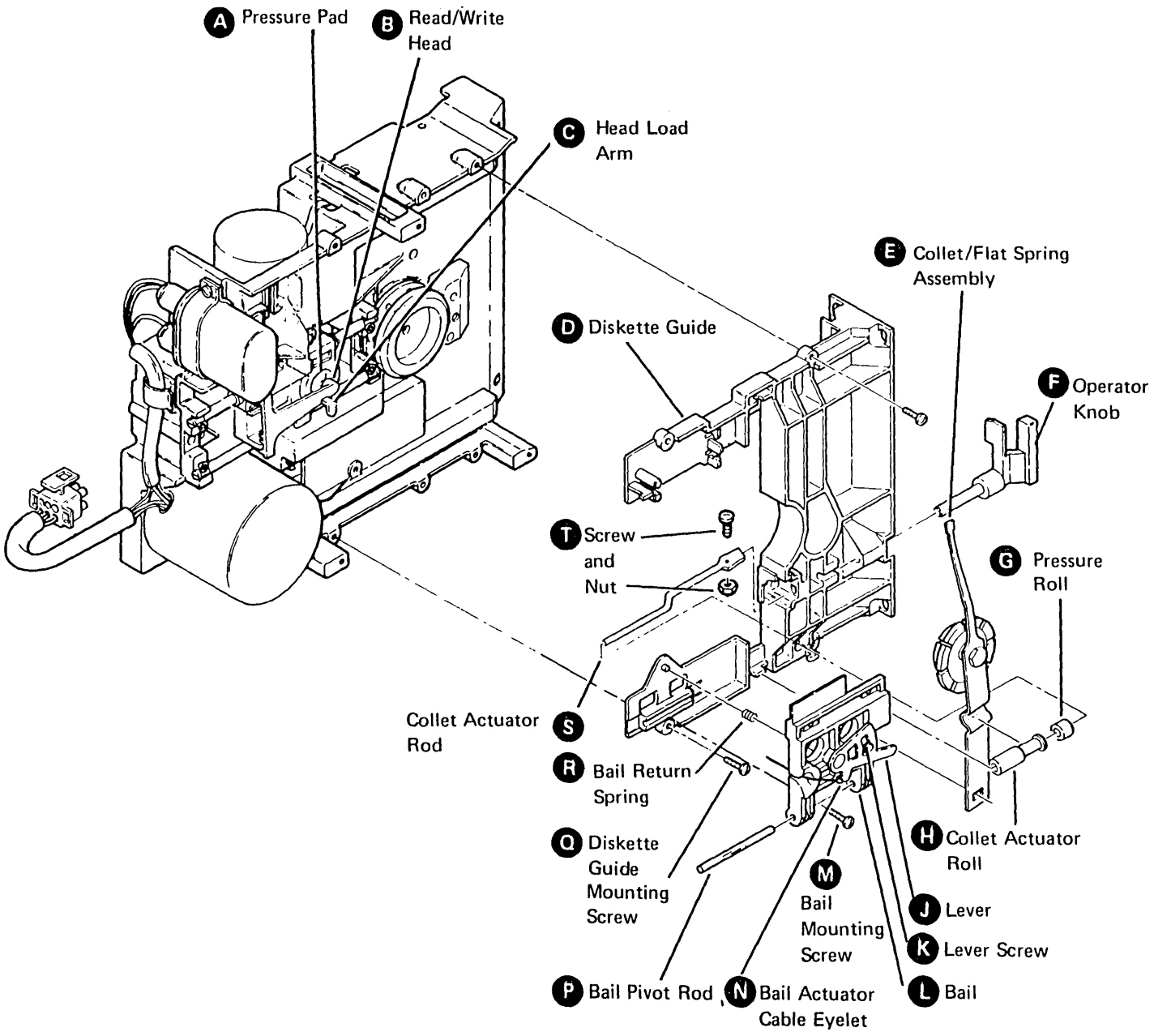

Figure E-21 (Part 1 of 2). Collet/Flat Spring Removal

3. Loosen the lever screw, K .
4. Push the bail, L , inward slightly, and disconnect the bail actuator cable eyelet, N , from the lever, J .
5. Turn the operator knob, F , to the open position.
6. Loosen the bail mounting screw, M .
7. Observe the position of the bail return spring, R ; then remove the bail pivot rod, P , the bail return spring, R , and the bail, L , by sliding the bail, L , out from under the head load arm, C .

Warning: Damage to the head, B , can occur if the pressure pad, A , is permitted to hit the head.

8. Remove the screw and nut, T , from the collet actuator rod, S .
9. Remove the operator knob, F .
10. Remove the collet actuator roll, H , and the pressure roll, G .
11. Turn the collet actuator rod, S , up and out of the way. Then remove the collet/flat spring assembly, E .

E.3.1.2 Collet/Flat Spring Replacement

See Figure E-21 (2 parts).

Warning: Too much pressure or binding of the flat spring, E , will damage the spring.

1. Reinstall the collet/flat spring assembly, E .
2. Reinstall the collet pressure roll, G , and actuator roll, H .
3. Turn the collet actuator rod, S , down against the spring.
4. Reinstall the operator knob, F , in the open position.
5. Reinstall the screw and nut, T , that attach the operator knob to the collet actuator rod, S . Push the operator knob and the collet actuator rod, S , together until there is a maximum of 0.1-mm (0.004-inch) end play, W , between the operator knob, F , and the diskette guide, D . (See Part 2 of Figure E-21.) Tighten the screw.
6. Reinstall the bail return spring, R , the bail, L , and the bail pivot rod, P . Place the bail, L , on the collet actuator rod, S . Ensure that the spring, R , is in the correct position. Place the bail, L , under the head load arm. Place the bail pivot rod, P , in the groove, and tighten the bail mounting screw, M .

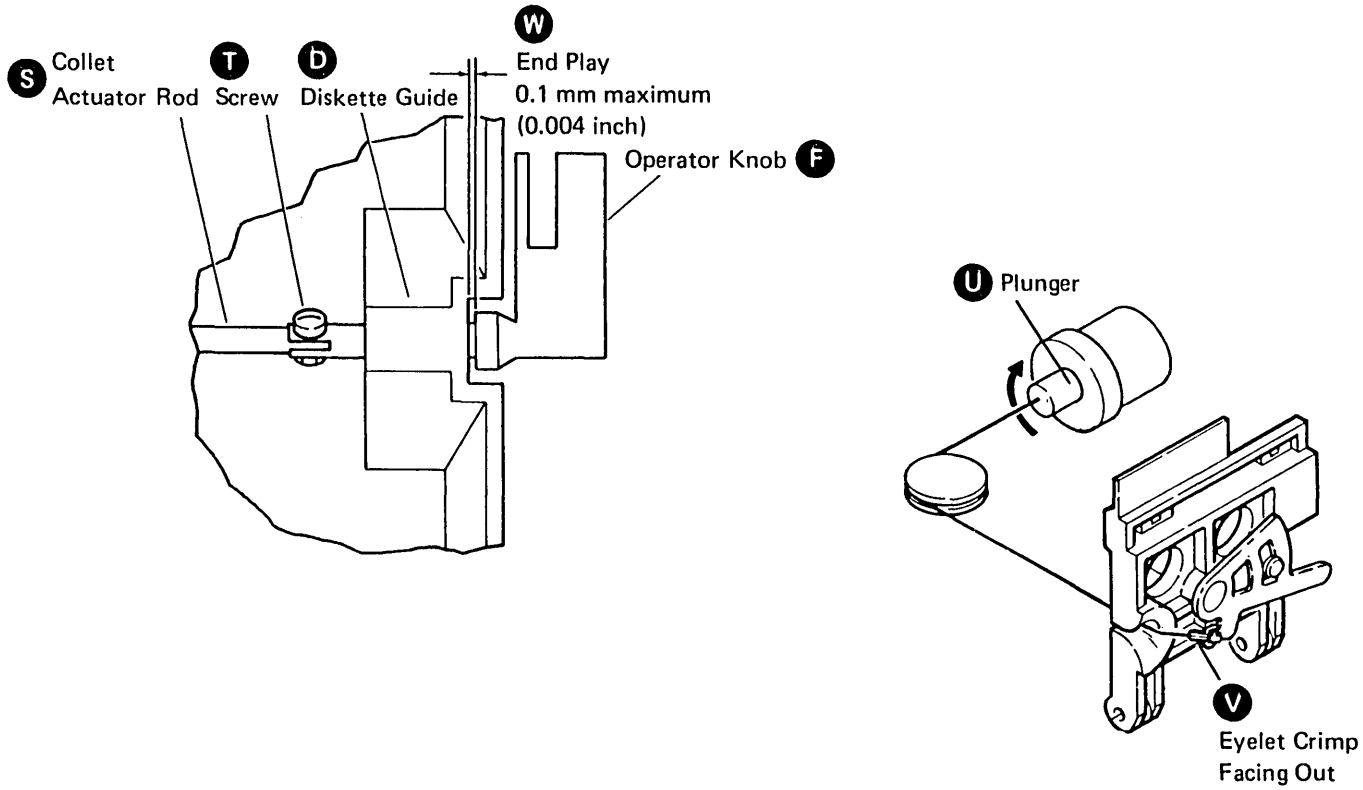

Figure E-21 (Part 2 of 2). Collet/Flat Spring Removal

7. Turn the operator knob, (F), to the closed position.
8. Push the bail, (L), inward slightly, and connect the cable to the lever, (J). Ensure that the eyelet crimp, (V), is facing outward, that the cable remains on the pulley, and that the cable is not twisted. (See Part 2 of Figure E-21.) Turn the solenoid plunger, (U), if necessary.
9. Turn the operator knob, (F), to the open position.
10. Ensure that the diskette moves in and out of the drive smoothly without hitting the collet. If the diskette will not move in and out smoothly, the flat spring, (E), has been damaged, and a new flat spring should be installed.
11. Perform the Head Gap Adjustment (paragraph E.3.3.3).

E.3.2 Head/Carriage Assembly

Warning: The head/carriage assembly is adjusted and tested at the factory. Do not attempt to adjust or repair any part of this assembly.

Do not attempt to clean the head/carriage assembly. If the assembly is not clean, exchange it.

E.3.2.1 Head/Carriage Pressure Pad Removal and Replacement

See Figure E-22.

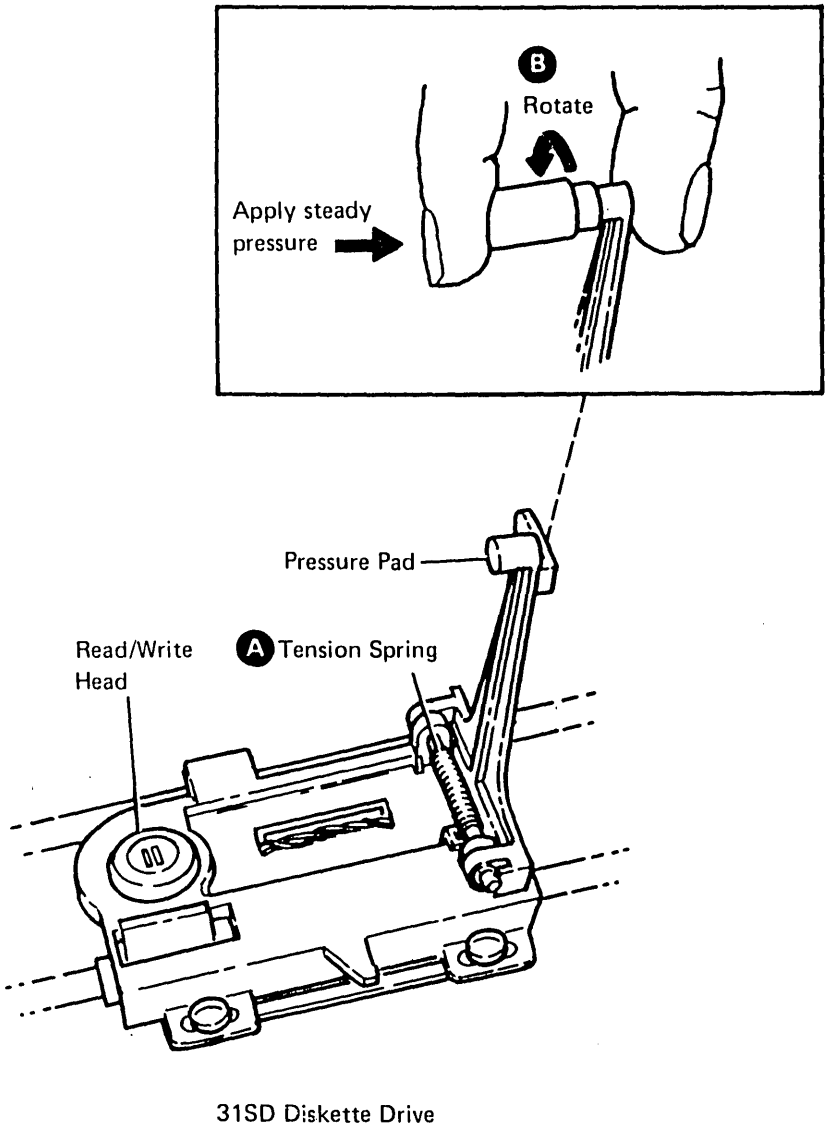

Figure E-22. Head/Carriage Pressure Pad Removal and Replacement

If the pressure pad is worn to a point nearly even with the surface of the head load arm, exchange the pad. Use pad B/M (part 2200751).

Warning: The head area can be easily damaged or contaminated. Read the following before exchanging a pressure pad:

- **Ensure that your tools are clean; use isopropyl alcohol (part 2200200) and a clean tissue (part 2162567), or use an alcohol pad (part 9900679).**
- **Do not touch the pressure pad with your fingers.**
- **Be careful not to damage the new pressure pad or loosen any of the pad's surface. The layer of adhesive on the new pad is very thin; do not damage the adhesive. Do not let the adhesive touch the surface of the pad that will touch the diskette. Do not use damaged pads.**
- **Do not scratch the head load arm.**
- **Do not let the head load arm hit the read/write head.**
- **Move the head load arm as little as possible. The tension spring, (A), can come out.**

1. Move the head load arm away from the read/write head.
2. Using your scissor clamp (part 9900233), pull the worn pad off the arm.
3. Carefully remove any adhesive that remains on the arm.
4. Ensure that the pressure pad mounting surface is lint-free; use tissue (part 2162567) moistened with isopropyl alcohol (part 2200200) or an alcohol pad (part 9900679). If the surface is not completely clean, the new pad may not seat correctly.
5. Using a knife (or similar thin blade), lift off the paper cover that protects the adhesive layer on the new pad.
6. Using your scissor clamp, carefully remove the new pressure pad from the other new pads.
7. Place the new pad in the center of its location on the head load arm.
8. Lightly press on the new pad with a clean screwdriver.
9. Using the small end of the pressure pad tool, (B), press at 90 degrees to the head load arm.
10. Use your other hand to turn the tool at least one revolution *in one direction only.*
11. Carefully move the head load arm back to its operational position.
12. Test the read/write head output. See Read/Write Principles (paragraph E.2.4).

E.3.2.2 Head/Carriage Service Check

See Figures E-23 and E-24.

Warning: The head/carriage service check must be performed with the diskette drive installed (or with the diskette drive in the same position as when installed) or the adjustment might not be accurate.

1. Power down.

   DANGER
   Voltage is still present at the socket when the power cable is disconnected.

2. Disconnect the ac drive motor power cable, (J).
3. Remove the head cable guide, (A).
4. Turn the stepper motor pulley by hand to track 40, and insert a timing pin, (C). (Ensure that the pin goes into the casting.)
5. Power up.
6. To disable the stepper motor, install a jumper, (L), from TCP04 (ground) to TH05 (-'disable stepper motor').
7. To locate the stepper motor at track 40, install a jumper, (M), between TPF01 (ground) and TPH04 (MC-0).
8. Put the timing pin, (C), through the stepper motor pulley into the timing hole in the casting. Does the timing pin pass freely through the hole?

   Y N
   - Remove the timing pin, (C).
   - Remove the jumpers, (L) and (M).
   - Power down.
   - Go to the Head/Carriage Adjustment (paragraph E.3.2.3), step 3.

9. Remove the timing pin, (C).
10. To move the stepper motor to track 39, remove the jumper connected to TPH04 and install the jumper end on TPH01 (MC-3).
11. Verify that this is track 39 by visually checking for no gap, (D), between the timing pointer, (E), and the timing block, (G).

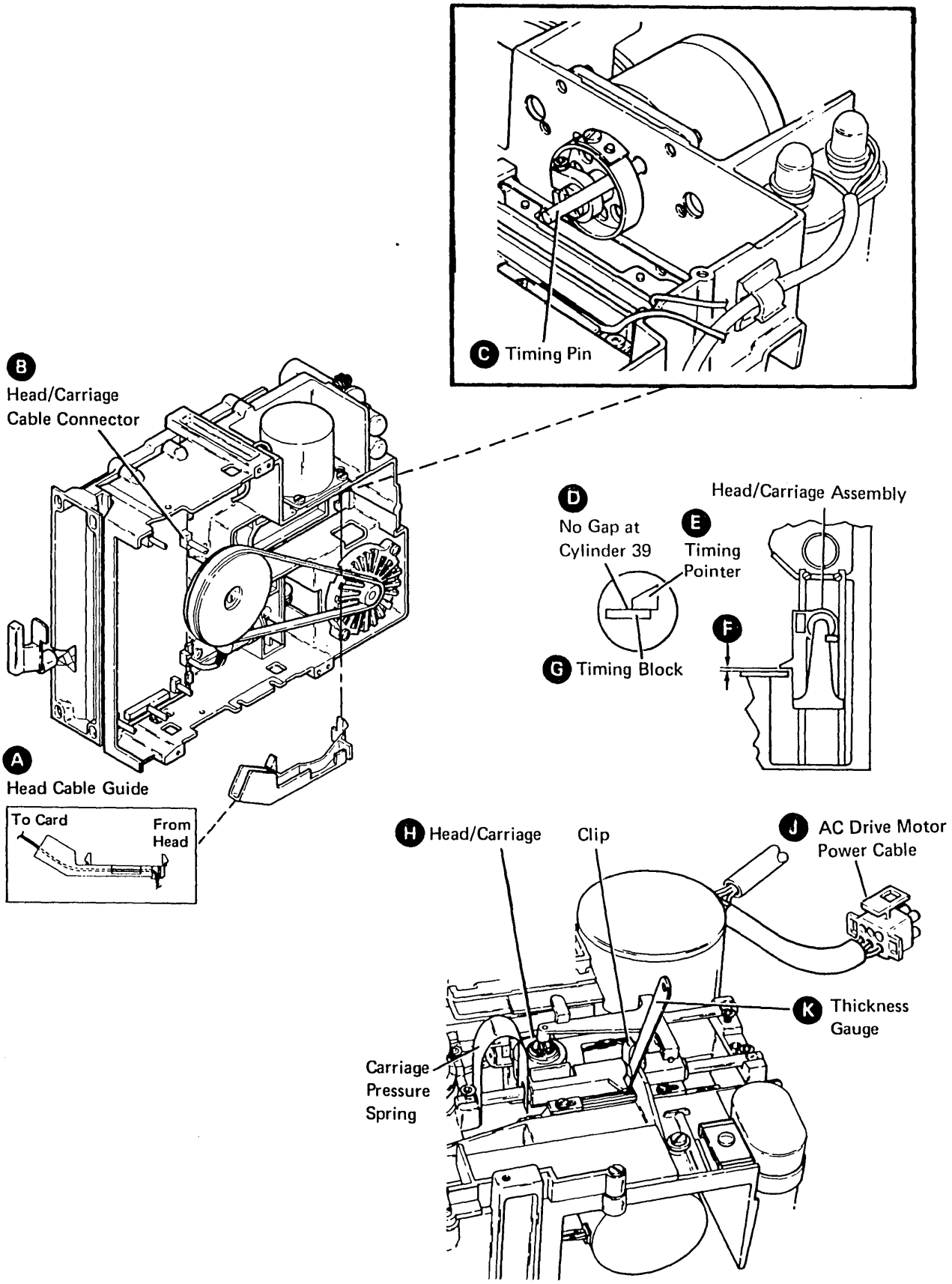

Figure E-23. Head/Carriage Service Check

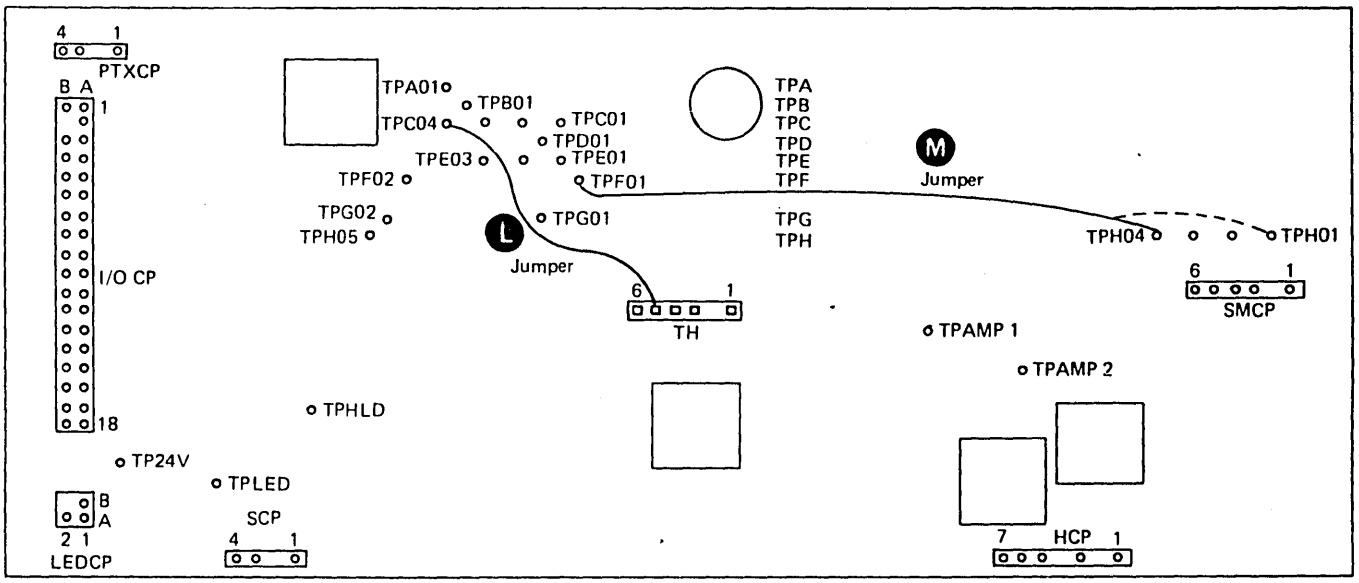

Figure E-24. 31SD Control Card

12. To move the stepper motor from track 39 back to track 40, remove the jumper connected to TPH01 and install the jumper end on TPH04 (MC-0).
13. Verify that this is track 40 by visually checking that the timing hole in the pulley lines up with the timing hole in the casting. (Use the dental mirror to verify; do not use a timing pin.)
14. Insert the thickness gauges from the end of the timing pointer, (E), and timing block, (G), to verify the indicated gap, (F):
    - 0.483 mm (0.019 inch). Go.
    - 0.533 mm (0.021 inch). No go.

    Note: *Because of the torque characteristics of the stepper motor, this step can be performed only once. If it is necessary to perform this step again, go back to step 10 of this service check.*
15. If the adjustment is not correct, go to step 12 of paragraph E.3.2.3.
16. Remove the jumpers, (L) and (M).
17. Reinstall the head cable guide, (A). (Ensure that the read/write head can move freely.)
18. Was the head/carriage assembly exchanged?

    Y
    ↓
    N
    - Power down.
    - Reconnect the ac drive motor power cable.
    - Power up.
    - End of procedure.
19. Go to the Head Gap Service Check (paragraph E.3.3.2).

E.3.2.3 Head/Carriage Adjustment

See Figure E-25.

Warning: The head/carriage assembly adjustment must be performed with the diskette drive installed (or in the same position as when installed), or the adjustment might not be accurate.

1. Power down.
2. Remove the cable guide, (A).
3. Measure and record the gap, (K), between the stepper motor pulley, (L), and the casting.

   Gap is: _____.
4. Loosen the clamp screw, (H), so the stepper motor drive shaft, (N), can turn inside the pulley, (L).
5. Turn the stepper pulley, (L), by hand to track 40, and insert the timing pin, (J). (Ensure that the pin goes into the casting.)

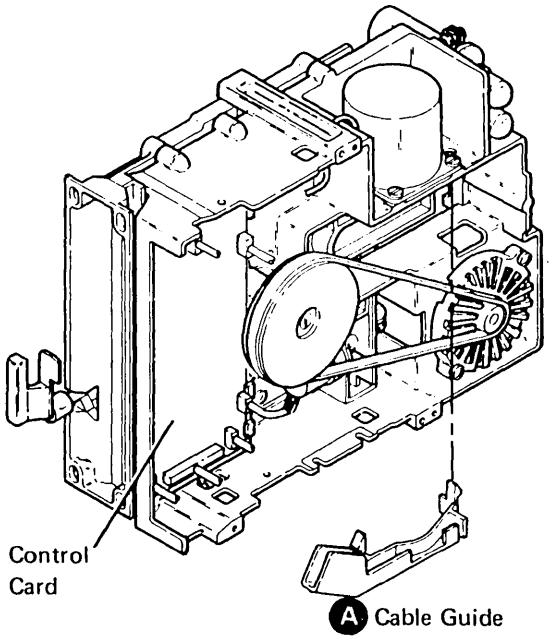

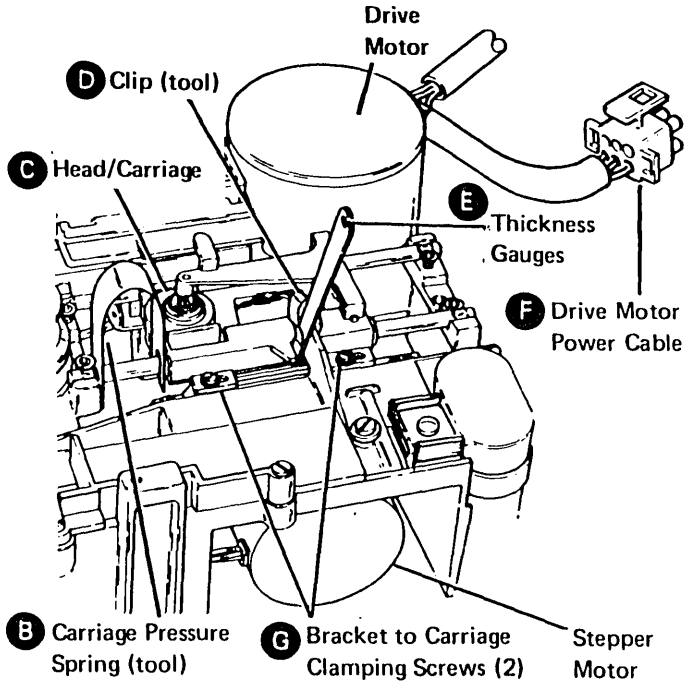

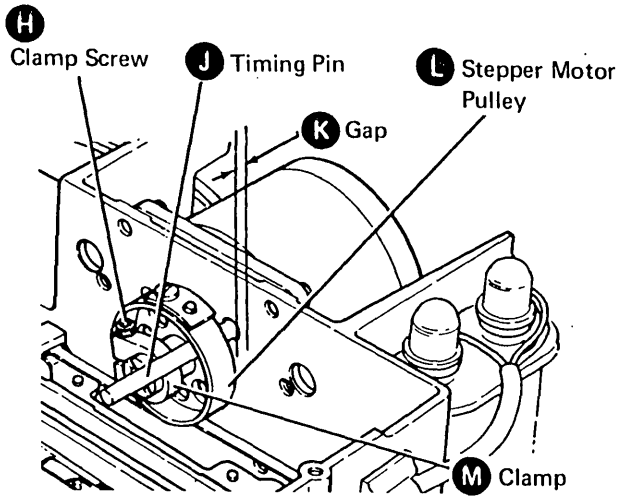

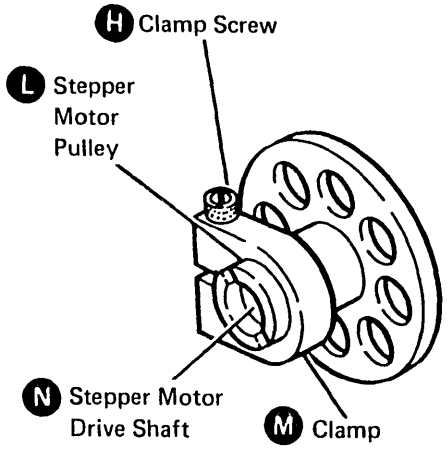

Figure E-25 (Part 1 of 2). Head/Carriage Adjustment

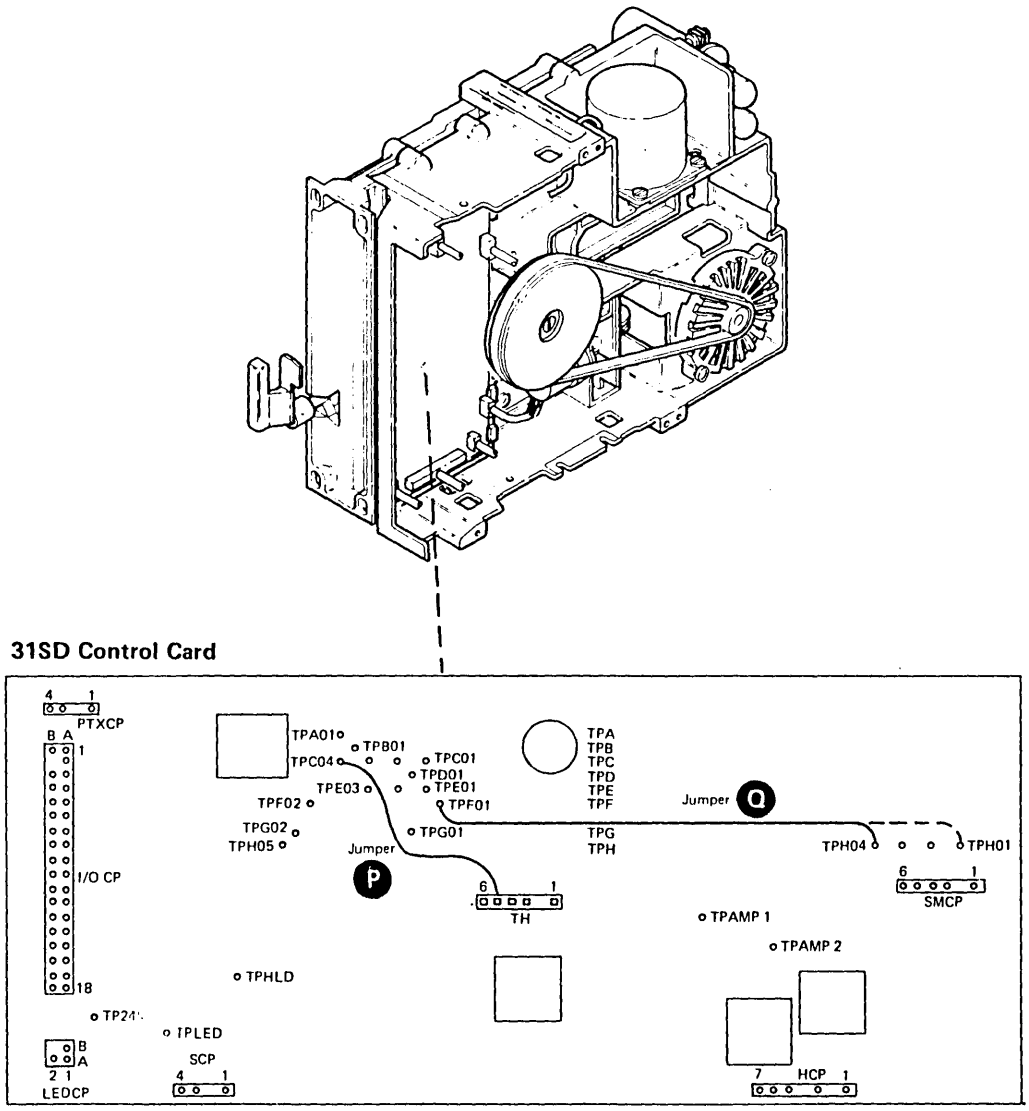

Figure E-25 (Part 2 of 2). Head/Carriage Adjustment

DANGER
Voltage is still present at the socket when the power cable is disconnected.

6. Disconnect the ac drive motor power cable, (F).
7. Power up.
8. To disable the stepper motor, install a jumper (P) from TPC04 (ground) to TH05 (-'disable stepper motor).
9. To locate the stepper motor at track 40, connect a jumper (P) from TPF01 (ground) to TPH04 (MC-0).
10. Make the gap, (K), the same size as the gap recorded in step 3, and tighten the clamp screw, (H). (Ensure that the timing pin passes freely through the stepper motor pulley into the hole in the casting.) The clamp, (M), should be placed even with the end of the stepper motor drive shaft, (N).
11. Remove the timing pin, (J).
12. Loosen the two bracket-to-carriage clamping screws, (G).
13. Remove the jumper end from TPH04, and install the jumper end on TPH01 (MC-3).
14. Remove the jumper end from TPH01, and connect the jumper end on TPH04 (MC-0).
15. Verify that this is track 40 by visually checking that the timing hole in the pulley lines up with the timing hole in the casting. (Use the dental mirror to check; do not use a timing pin.)
16. Insert a 0.508 mm (0.020 inch) thickness gauge, (E), between the timing pointer on the carriage and the track 40 adjustment surface on the casting. Use the clip (part 4240632), (D), to attach the thickness gauge to the casting. The clip is attached to the diskette guide (see Figure E-4).
17. Slide the head/carriage, (C), against the thickness gauge so it just touches but is not forced against the thickness gauge. Install the carriage pressure spring (part 4240631), (B), between the casting and the carriage to hold the head/carriage assembly against the thickness gauge. The pressure spring is attached to the diskette guide (see Figure E-4).
18. Tighten the two screws, (G), that fasten the bracket to the carriage.
19. Remove the clip, (D), and the carriage pressure spring, (B).
20. Go to step 10 of paragraph E.3.2.2.

E.3.2.4 Head/Carriage Removal

See Figure E-26.

1. Power down.
2. Carefully remove the head/carriage cable connector, (A), from the control card. (Note the cable path for easier replacement.)
3. Remove the cable guide, (B).

Warning: Band (C) must not be bent or damaged in any way.

4. Remove the band, (C), by removing the three screws, (E) and (M), that attach the band to the stepper pulley, (L), and the carriage bracket, (D). (Note the position of the band and clamps; they must be in the same position for replacement.)
5. Remove the carriage bracket, (D), from the carriage.
6. Remove the two screws, (J), and remove the guide rod, (F).
7. Carefully lift and turn the head/carriage assembly, (H), to remove it from the guide rod, (G).

E.3.2.5 Head/Carriage Replacement

See Figure E-27.

Warning: When you install the head/carriage assembly, (S), ensure that the bail, (E), is under the head load arm, (D). Ensure that the bail return spring, (G), is correctly installed. Ensure that the band, (L), is not damaged in any way.

1. Carefully install the head/carriage assembly, (S), on the guide rod, (Q). Then place the head/carriage assembly at track 00.
2. Reinstall the guide rod, (P), and tighten the two screws, (R). (Ensure that the guide rod notch, (U), is aligned with the screw, (T).)
3. Place the head/carriage assembly at track 40.
4. Reinstall the carriage bracket, (M), on the carriage with the screws and washers, (R), installed in the center of the hole.
5. Reconnect the band, (L), as follows: Install the adapter welded to band (V) to the slotted end, (B), of the carriage bracket, (M). Leave the screw loose. Install band (L) to the stepper motor pulley, (W), with clamp (J). Install the end of band (L) to the carriage bracket with clamp (K). Ensure that the band is parallel to the carriage bracket, (M), and the edge of the pulley, (H), during installation.

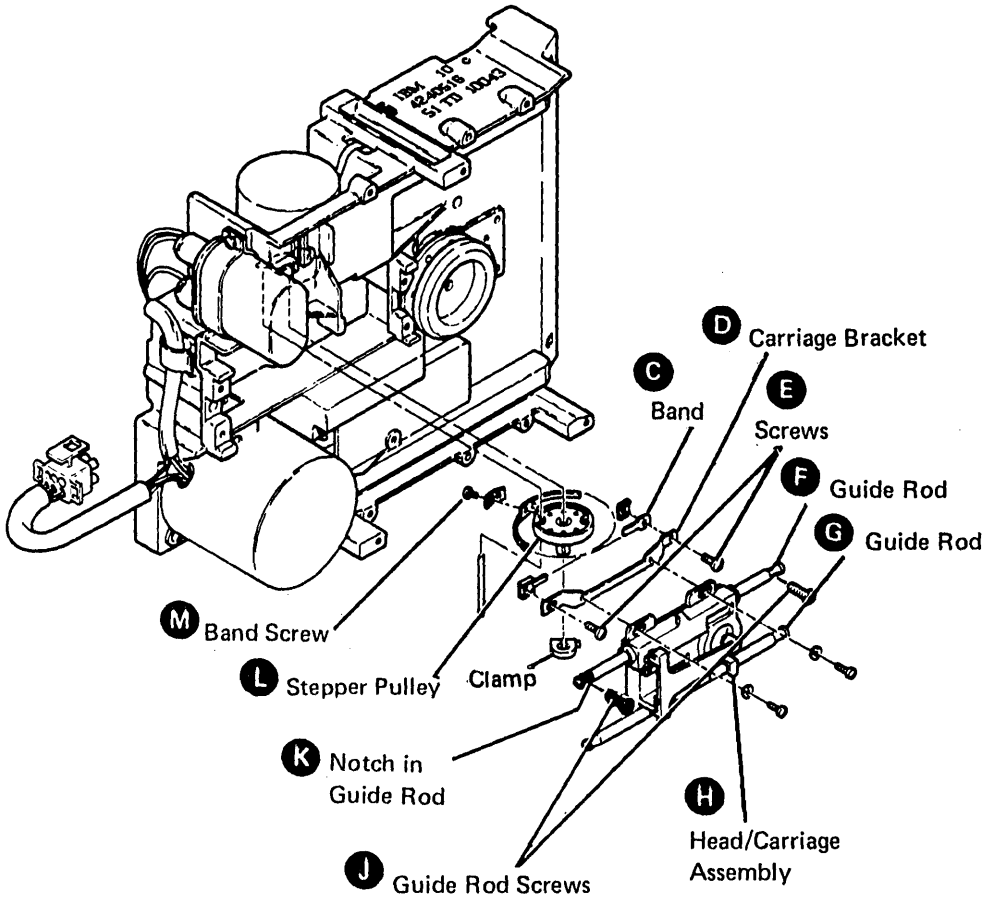

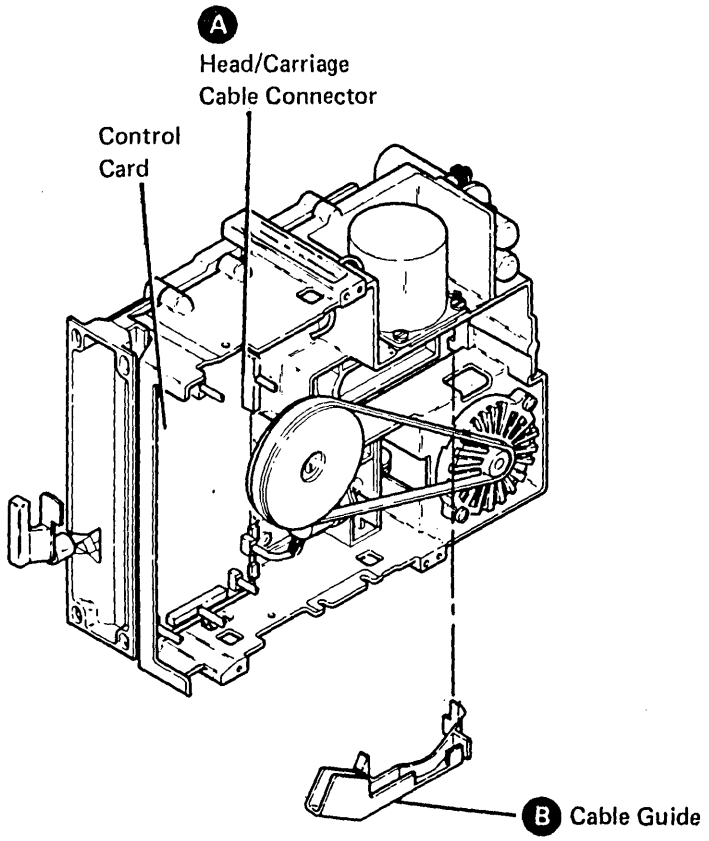

Figure E-26. Head/Carriage Removal

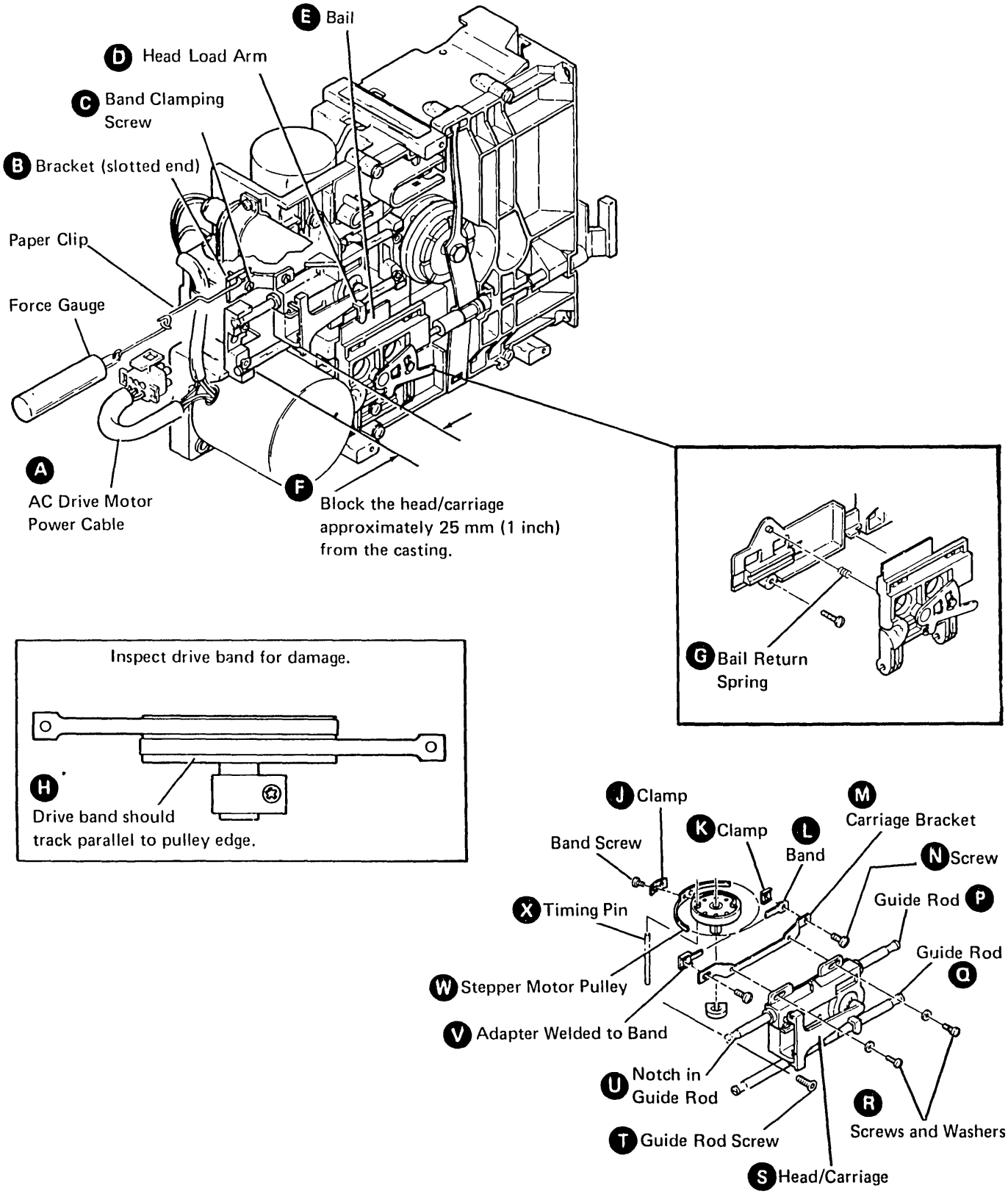

Figure E-27 (Part 1 of 2). Head/Carriage Replacement

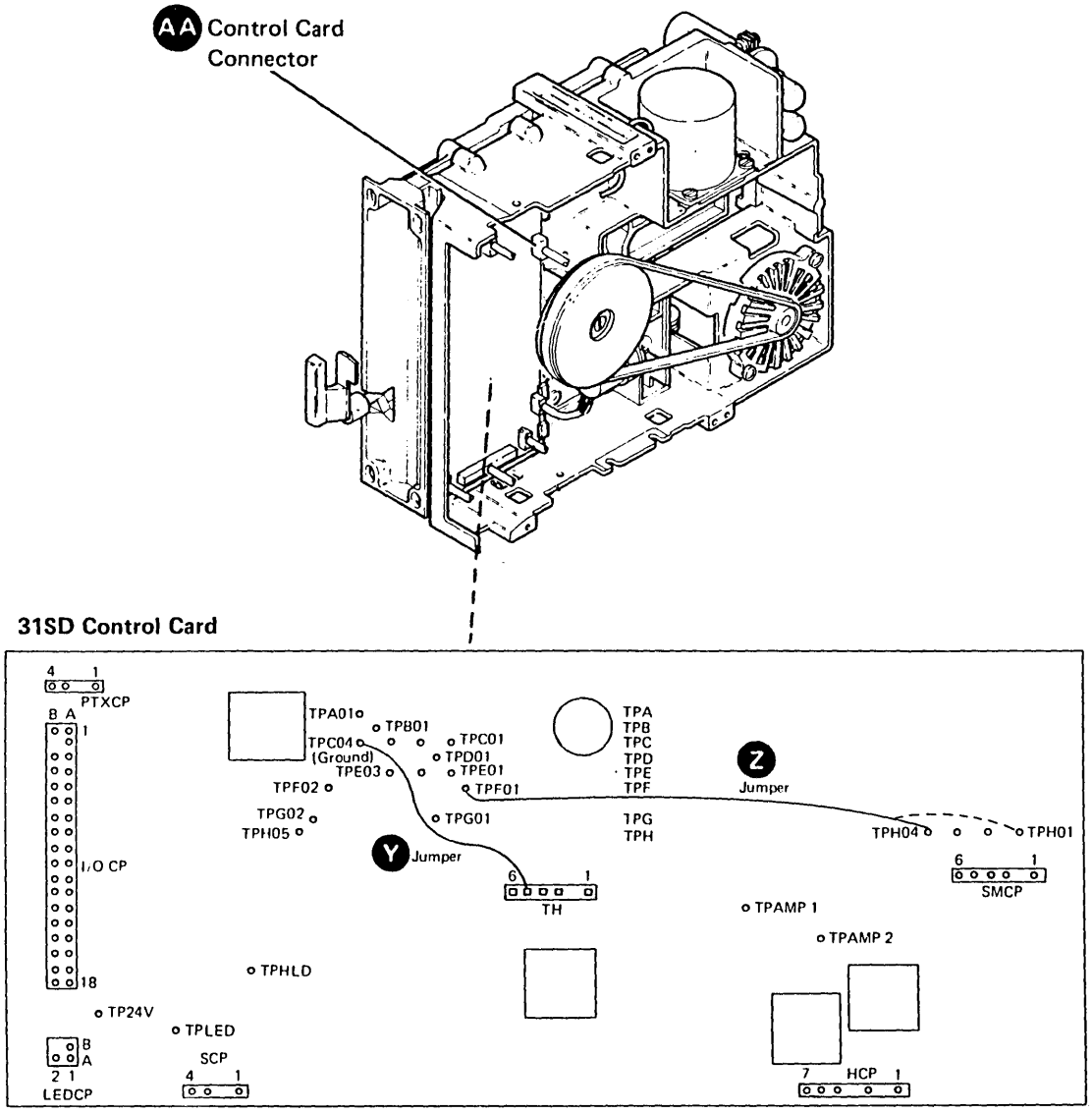

Figure E-27 (Part 2 of 2). Head/Carriage Replacement

6. Block the head/carriage about 25 mm (1 inch) from the casting, (F).
7. Pull on the adapter welded to band (V) with 2.5 ± 0.25 pounds' force, and tighten the band clamping screw, (C). Ensure that the band is parallel to the pulley edge, (H).
8. Move the carriage to track 00 and then to track 76. Ensure that the band track is straight and that the drive band is parallel to the pulley edge, (H).
9. Carefully connect the head/carriage cable to the control card connector, (AA).
10. Turn the stepper motor pulley, (W), by hand to track 40, and check with the timing pin, (X). Ensure that the pin goes into the casting.

DANGER
Voltage is still present at the socket when the power cable is disconnected.

11. Disconnect the ac drive motor power cable, (A).
12. Power up.
13. To disable the stepper motor, install a jumper, (Y), from TPC04 (ground) to TH05 (-'disable stepper motor').
14. Install a jumper, (Z), from TPF01 (ground) to TPH04 (MC-0).
15. Put the timing pin through the stepper motor pulley, (W), into the timing hole in the casting. Does the timing pin pass through the timing hole freely?

    Y — N
    - Remove the timing pin, (X).
    - Remove the jumpers (Y) and (Z).
    - Power down.
    - Go to step 3 of paragraph E.3.2.3.

    Remove the timing pin (X).
16. Go to step 12 of paragraph E.3.2.3.

E.3.3 Head Load Solenoid and Bail

E.3.3.1 Solenoid and Bail Service Check

See Figure E-28.

1. Power down.

DANGER
Voltage is still present at the socket when the power cable is disconnected.

2. Disconnect the ac drive motor power cable, (G).
3. Insert a diskette, and turn the operator knob, (B), to the closed position.
4. Power up.
5. To activate the head load solenoid, install a jumper, (E), from TPC04 (ground) to the head load TPHLD (-'head load').
6. To deactivate the stepper motor, install a jumper, (F), from TPC04 (ground) to TH05 (-'disable stepper motor').
7. Verify a 0.3 to 0.7 mm (0.012 to 0.028 inch) gap, (D), between the bail and the head load arm at each end of the head movement.
8. Is the gap OK? If not, go to Bail Adjustment (paragraph E.3.3.4, step 5).
9. Remove the jumpers (E) and (F).
10. Turn the operator knob, (B), to the open position, and remove the diskette.
11. Turn the operator knob, (B), to the closed position.
12. Power down.
13. Reconnect the ac drive motor power cable, (G).
14. Power up.

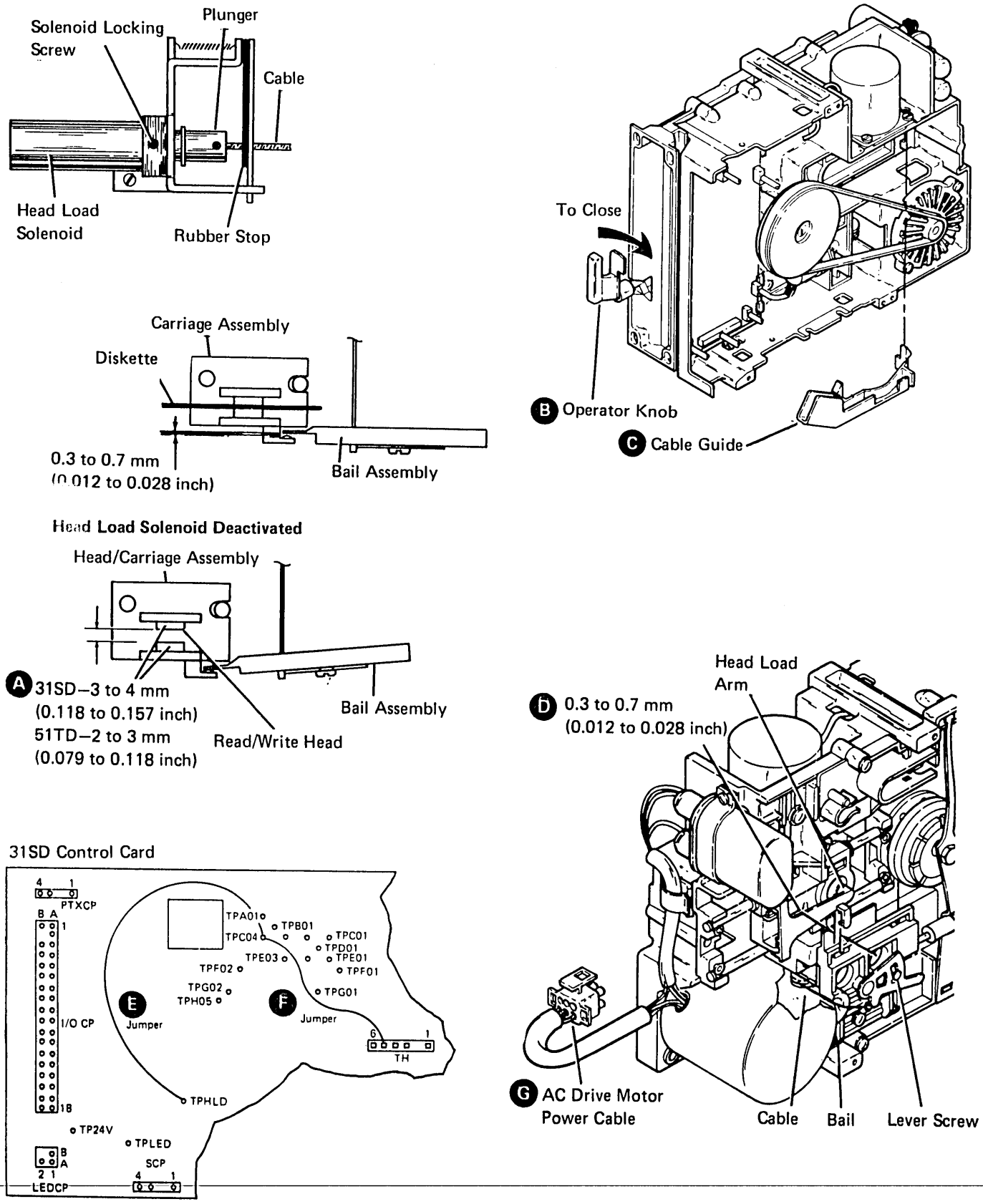

Figure E-28. Solenoid and Bail Service Check

E.3.3.2 Head Gap Service Check

See Figure E-29.

1. Power down.
2. Turn the operator knob, (B), to the closed position.
3. Visually check for a gap of 3 to 4 mm (0.118 to 0.157 inch) between the bail assembly and the head load arm.
4. Is the gap OK? If not, go to step 3 of paragraph E.3.3.3.
5. Turn the operator knob, (B), to the open position.
6. Power up.
7. If the head/carriage assembly was exchanged, go to the Solenoid and Bail Service Check (paragraph E.3.3.1).

E.3.3.3 Head Gap Adjustment

See Figure E-29.

1. Power down.
2. Turn the operator knob to the closed position.
3. Tighten the lever screw, (K), just enough so that the lever, (J), can still be adjusted.
4. While looking into the diskette opening, move the lever until the load arm, (F), just touches the head.
5. Note the lever marks, (H), on the lever relative to the bail alignment edge, (G).
6. Turn the lever 1-1/2 spaces clockwise.
7. Tighten screw (K).
8. The gap, (B), between the head load arm and the head should now be 3 to 4 mm (0.118 to 0.157 inch).
9. Is the gap OK?

Y ↓ — Go to Solenoid and Bail Service Check (paragraph E.3.3.1).

N — Go back to step 3.

E.3.3.4 Bail Adjustment

See Figure E-29.

1. Power down.

DANGER
Voltage is still present at the socket when the power cable is disconnected.

2. Disconnect the ac drive motor power cable, (L).
3. Power up.
4. Insert a diskette, and turn the operator knob to the closed position.
5. To activate the head load solenoid, install a jumper, (C) from TPC04 (ground) to the head load TPHLD (-'head load').
6. To deactivate the stepper motor, install a jumper, (D), from TPC04 (ground) to TH05 (-'disable stepper motor').

CAUTION: The solenoid case becomes hot after continuous use.

7. Loosen the solenoid locking screw, (A).

Warning: Do not let the solenoid plunger and cable turn while you make this adjustment.

8. Turn the solenoid in the mounting bracket to obtain a 0.3 to 0.7 mm (0.012 to 0.028 inch) gap, (E), between the head load arm and the bail.
9. Tighten screw (A).
10. Is the gap OK at each end of the head movement (step 8)?

Y ↓
11. Remove the jumpers, (C) and (D).
12. Turn the operator knob to the open position, and remove the diskette.
13. Power down.
14. Reconnect the ac drive motor power cable, (L).
15. Power up.

N — Go back to step 7.

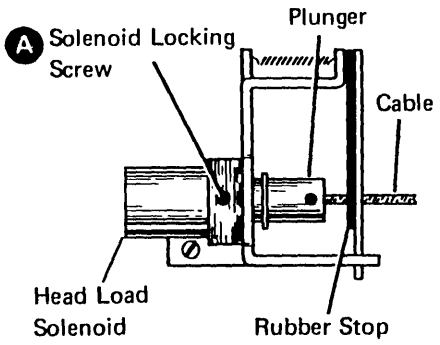

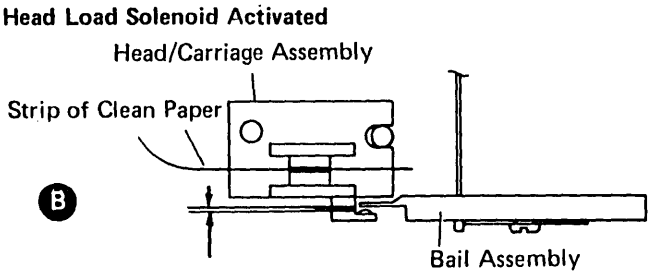

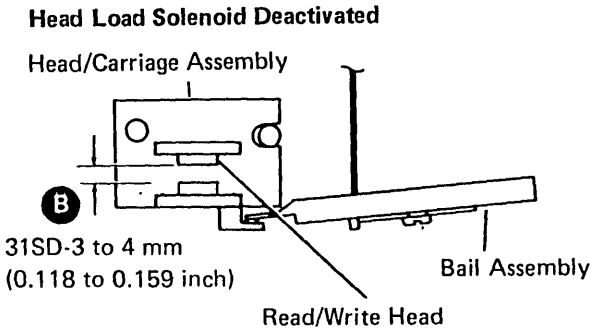

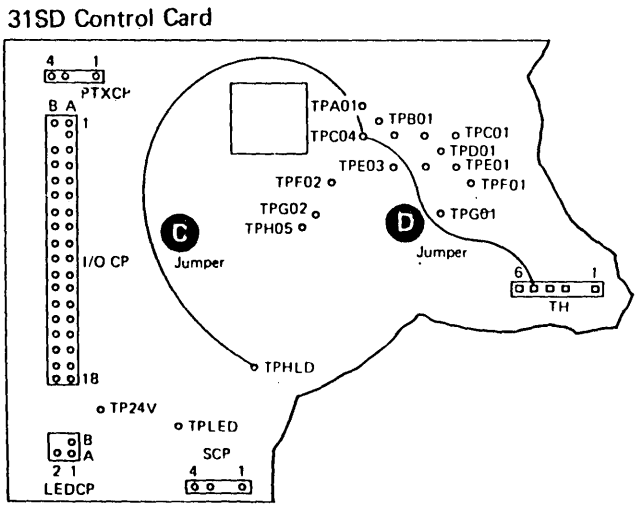

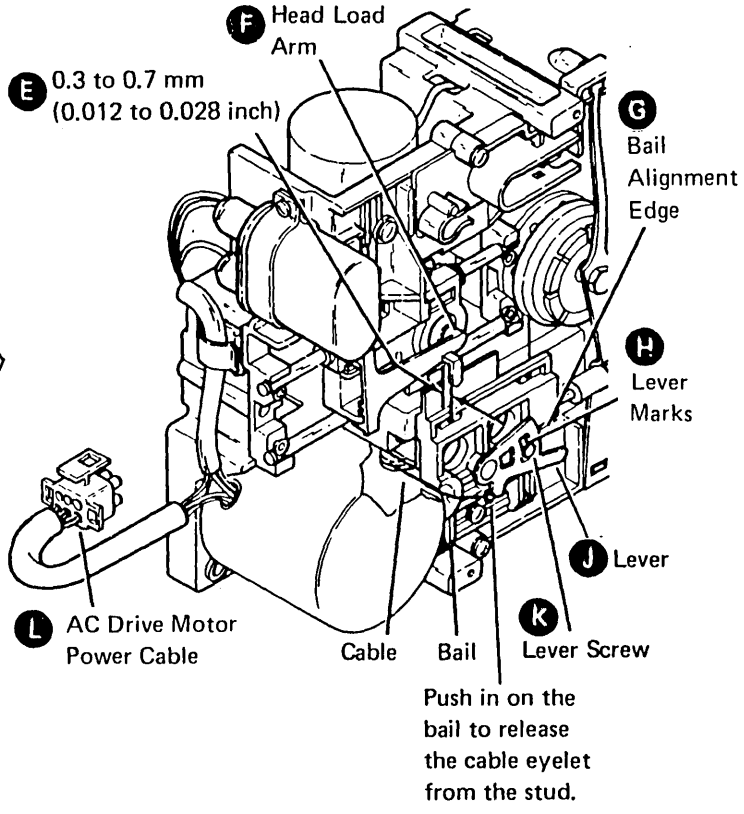

Figure E-29. Head Gap Adjustment

E.3.3.5 Bail Removal

See Figure E-30.

1. Power down.

> **DANGER**
> **Voltage is still present at the socket when the power cable is disconnected.**

2. Disconnect the ac drive motor power cable, (A).
3. Turn the operator knob to the closed position.
4. Loosen the lever screw, (C).
5. Push the bail, (J), inward slightly, and disconnect the bail cable eyelet, (G), from the lever, (D).
6. Turn the operator knob to the open position.
7. Loosen the bail mounting screw, (E).

Warning: Permitting the pressure pad to hit the head can damage the head.

8. Observe the position of the bail return spring, (K). Now remove the pivot rod, (H), the bail return spring, (K), and the bail, (J) by lifting the bail out from under the head load arm, (B).

E.3.3.6 Bail Replacement

See Figure E-30.

1. Reinstall the bail return spring, (K), the bail, (J), and the pivot rod, (H). Place the bail, (J), on the collet actuator rod, (L). Ensure that the bail return spring, (K), is in the correct position. Place the bail, (J), under the head load arm, (B), place the bail pivot rod, (H), in the groove, and tighten the screw, (E).
2. Turn the operator knob to the closed position.
3. Push the bail, (J), inward slightly, and connect the cable eyelet, (G), to the bail lever with the crimp, (N), facing outward. (Ensure that the cable remains on the pulley and is not twisted; turn the solenoid plunger, (M), if necessary.)
4. Turn the operator knob to the open position.
5. Perform the Head Gap Adjustment (paragraph E.3.3.3).

E.3.3.7 Solenoid and Idler Removal

See Figure E-31.

1. Power down.

> **DANGER**
> **Voltage is still present at the socket when the power cable is disconnected.**

2. Disconnect the ac drive motor power cable, (B).
3. Turn the operator knob, (F), to the closed position.
4. Loosen the lever screw, (K).
5. Push the bail, (L), inward slightly, and disconnect the cable eyelet, (M), from the bail lever, (N).
6. Turn the operator knob, (F), to the open position.
7. Remove the ac motor drive belt, (A).
8. Remove the solenoid cable connector, (E), from the control card.
9. Remove the solenoid, the bracket, and the cable as a unit, (D).
10. Loosen the solenoid locking setscrew, (G), and unscrew the solenoid from the bracket. (The solenoid and the bail actuator cable are exchanged as a unit.)

E.3.3.8 Solenoid and Idler Replacement

See Figure E-31.

1. Reinstall the solenoid, (D), on the bracket.
2. Reinstall the solenoid, bracket, and cable as a unit.
3. Reconnect the head load solenoid cable connector, (E), to the control card.
4. Reinstall the ac motor drive belt, (A).
5. Turn the operator knob, (F), to the closed position.
6. Push the bail, (L), inward slightly, and connect the cable eyelet, (M), to the bail lever, (N), with the eyelet crimp, (P), facing outward. (Ensure that the cable remains on the pulley and is not twisted; turn the solenoid plunger, (H), if necessary.)
7. Turn the operator knob, (F), to the open position.
8. Perform the Head Gap Adjustment (see paragraph E.3.3.3).

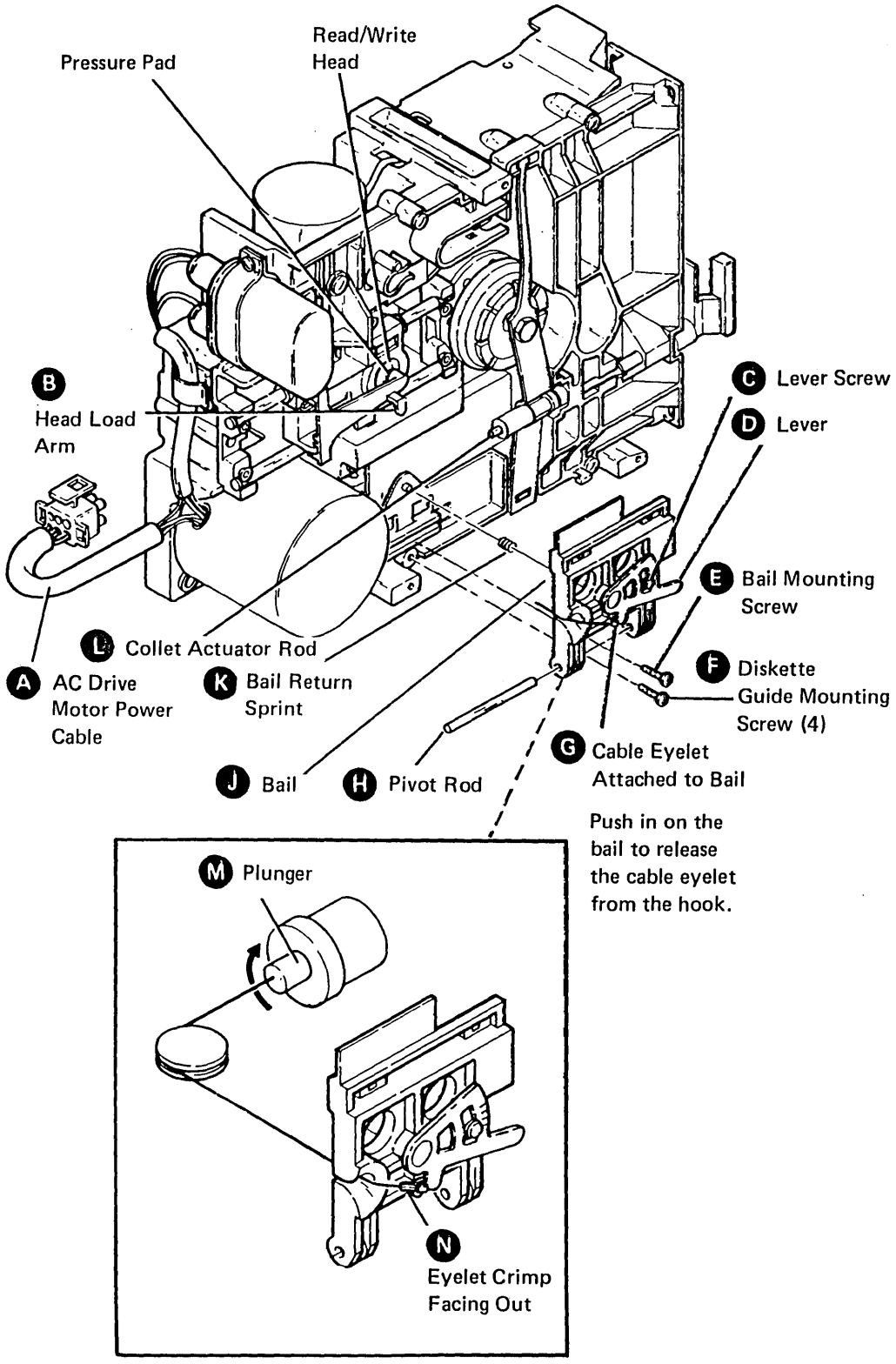

Figure E-30. Bail Removal

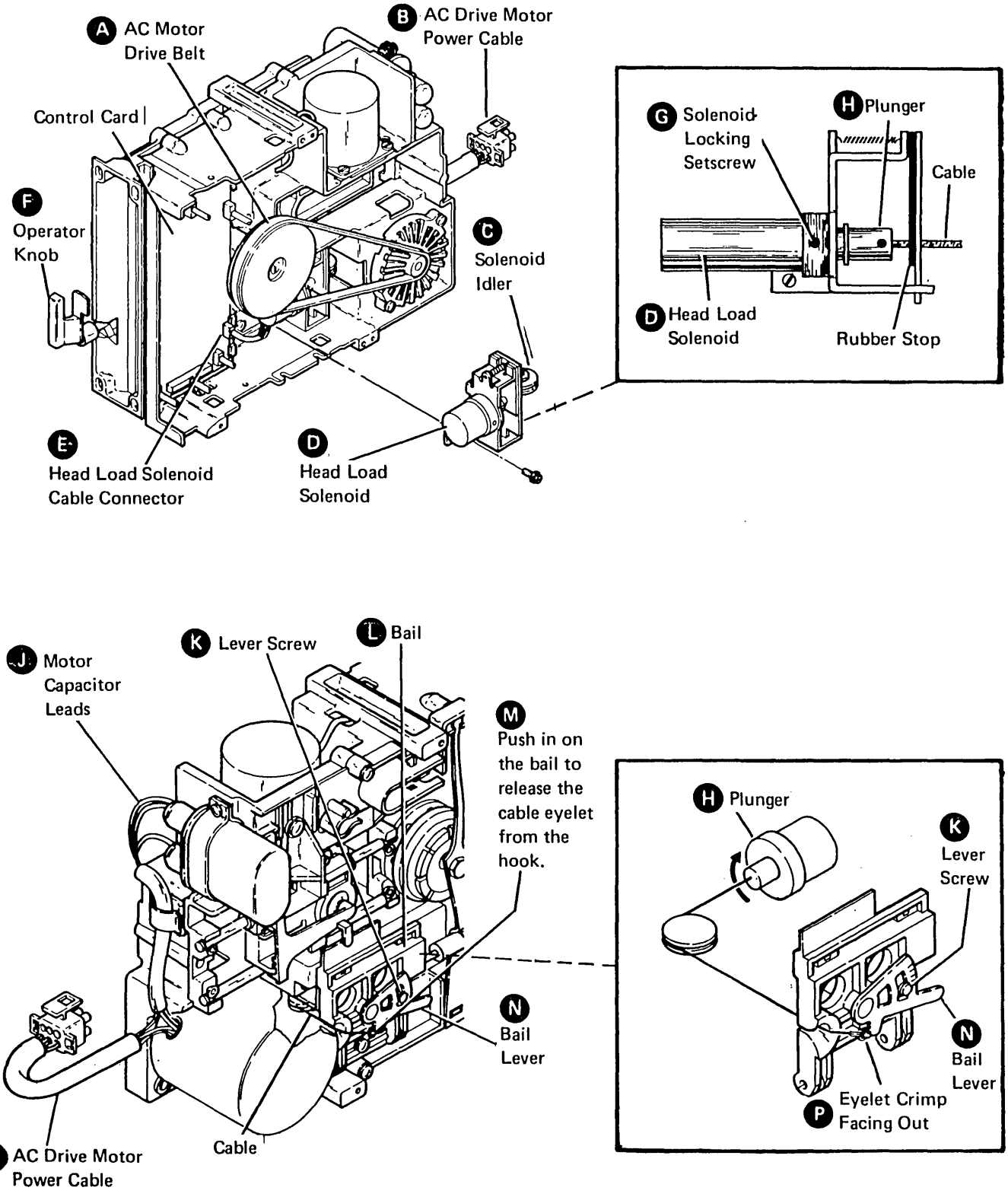

Figure E-31. Solenoid and Idler Removal

E.3.4 AC Drive Parts

E.3.4.1 Drive Motor Removal

See Figure E-32.

1. Power down.

DANGER
Voltage is still present at the socket when the power cable is disconnected.

2. Disconnect the ac drive motor power cable, (B) .
3. Remove the ac motor drive belt, (A) .

CAUTION: The motor case becomes hot after continuous use.

4. Remove the two enclosure mounting screws, (P) , and remove the fan enclosure.
5. Loosen the drive pulley/fan locking setscrew, (M) ; then remove the ac drive motor pulley/fan assembly, (K) .

DANGER
High voltage may be present at the capacitor terminals, (F) .

6. Remove the two capacitor insulator caps, (H) , from the capacitor terminals.
7. Discharge the capacitor by jumpering its terminals, (F) , with the large blade screwdriver.
8. Remove the motor capacitor leads, (G) , from the capacitor terminals.
9. Remove the motor capacitor leads, (G) , from the cable guide, (J) , on the casting.
10. Remove the insulator caps, (H) , from the motor capacitor leads, (G) .
11. Remove the remaining two motor mounting screws, (L) , and remove the motor, (A) .

E.3.4.2 Drive Motor Replacement

See Figure E-32.

1. Install the ac drive motor, (A) , with the two mounting screws, (L) . Note in Figure E-31 that the cable, (B) , and the motor capacitor leads, (J) , should extend toward the rear of the machine.
2. Install the ac drive motor pulley/fan, (K) , on the new motor. Ensure that the setscrew, (M) , is centered in the flat surface of the motor shaft. (Leave the setscrew loose.)
3. Position the fan and pulley on the motor shaft with a gap of 0.5 mm ± 0.1 mm (0.020 ± 0.004 inch) between the motor face and the fan hub. Tighten the setscrew.
4. Reinstall the fan enclosure, (N) , with the belt clearance slots toward the drive hub, (R) .
5. Reinstall the drive belt, (Q) .
6. Reinstall the two capacitor insulator caps, (H) , on the motor capacitor leads, (G) (one on leads 2 and 3, and one on lead 1).
7. Reconnect the-motor capacitor leads, (G) , in the guide, (J) , on the casting.
8. Reinstall the motor capacitor leads, (G) , on the capacitor terminals, (F) (leads 2 and 3 on the top terminal and lead 1 on the bottom terminal).
9. Reinstall the two insulator caps, (H) , on the capacitor terminals, (F) .
10. Reconnect the ac drive motor power cable, (B) .

E.3.4.3 Capacitor Removal

See Figure E-32.

1. Power down.

DANGER
Voltage is still present at the socket when the power cable is disconnected.

2. Disconnect the ac drive motor power cable, (B) .
3. Remove the two insulator caps, (H) , from the capacitor terminals, (F) .
4. Discharge the capacitor by jumpering the capacitor terminals, (F) , with a large blade screwdriver.
5. Remove the motor capacitor leads, (G) , from the capacitor terminals.
6. Remove the screw, (C) , and remove the capacitor bracket assembly, (D) .

E.3.4.4 Capacitor Replacement

See Figure E-32.

1. Reinstall the capacitor assembly, (D) , with the screw, (C) , and tighten the screw.
2. Reinstall the motor capacitor leads, (G) , on the capacitor terminals, (F) (leads 2 and 3 on the top terminal and lead 1 on the bottom terminal).
3. Reinstall the two insulator caps, (H) , on the capacitor terminals.

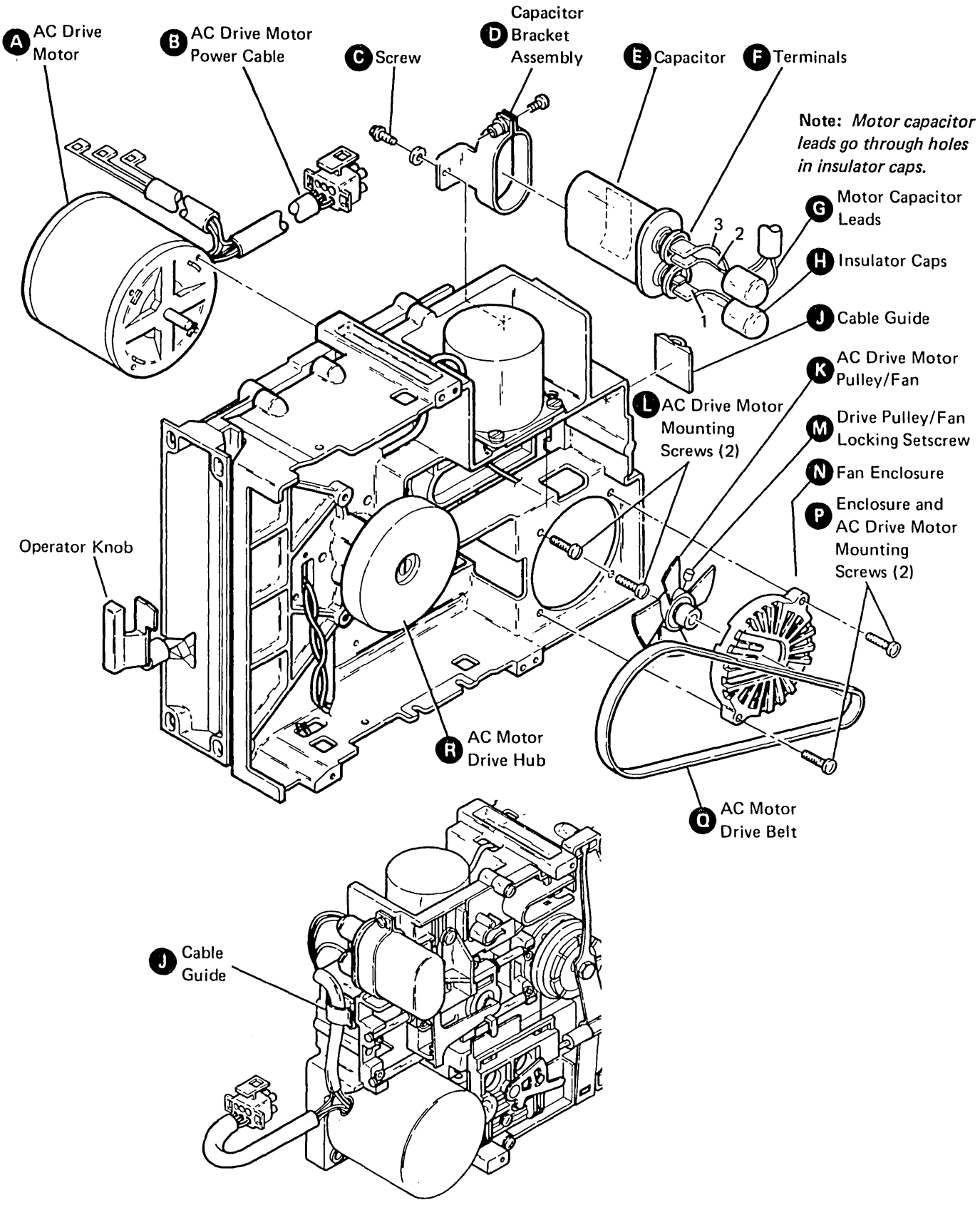

Figure E-32. AC Drive Motor Removal

E.3.4.5 Drive Fan and Pulley Assembly Removal

See Figure E-32.

1. Power down.

   DANGER
   Voltage is still present at the socket when the power cable, B, is disconnected.

2. Remove the ac drive belt, Q.
3. Remove the fan enclosure mounting screws, P, and remove the fan enclosure, N.
4. Loosen the setscrew, M; then remove the ac drive motor pulley/fan, K.

E.3.4.6 Drive Fan and Pulley Assembly Replacement

See Figure E-32.

1. Reinstall the ac drive motor pulley, K, on the motor shaft so that the setscrew, M, is centered in the flat surface of the shaft. (Leave the setscrew loose.)
2. Position the fan and pulley on the motor shaft with a gap of 0.5 mm ± 0.1 mm (0.020 ± 0.004 inch) between the motor face and the fan hub. Tighten the setscrew.
3. With the mounting screws, P, reinstall the fan enclosure, N, with the belt clearance slots toward the drive hub, R.
4. Reinstall the drive belt, Q.
5. Reconnect the ac drive motor power cable, B.
6. Power up.

E.3.5 Stepper Drive Parts

E.3.5.1 Stepper Motor Removal

See Figure E-33.

1. Power down.
2. Remove the head cable connector, L, from the control card.
3. Remove the head cable guide, P.

Warning: The stepper drive band, J, assembly can be easily damaged. Do not bend, crease, or scratch the band.

4. Remove the three mounting screws, A, F, and G, and clamp, B, that attach the stepper drive band, J, to the stepper motor drive pulley, C, and carriage bracket, E. (Note the position of the band, J, and clamp, B, for easier replacement.)
5. Remove the band assembly.
6. Measure and record the gap, U, between the stepper motor pulley, C, and the casting for later use.

   Gap is _____ .

7. Loosen the stepper pulley clamp screw, Q, and remove the stepper pulley, C, and the clamp, H.
8. Remove the stepper motor cable connector, K, from the control card.
9. Remove the four stepper motor mounting screws, N.
10. Remove the stepper motor, M.

E.3.5.2 Stepper Motor Replacement

See Figure E-33.

1. Reinstall the stepper motor, M, using the four mounting screws, N. (Locate the motor cable toward the control card.)
2. Reinstall the stepper motor cable connector, K, on the control card.
3. Reinstall the stepper motor pulley, C, and the clamp, H. (Adjust the gap, U, between the pulley and the casting to the measurement recorded in step 6 of paragraph E.3.5.1.) The clamp, H, should be placed even with the end of the stepper motor drive shaft, D.
4. Reinstall the drive band, J. Go to Head/Carriage Replacement (paragraph E.3.2.5, step 5).

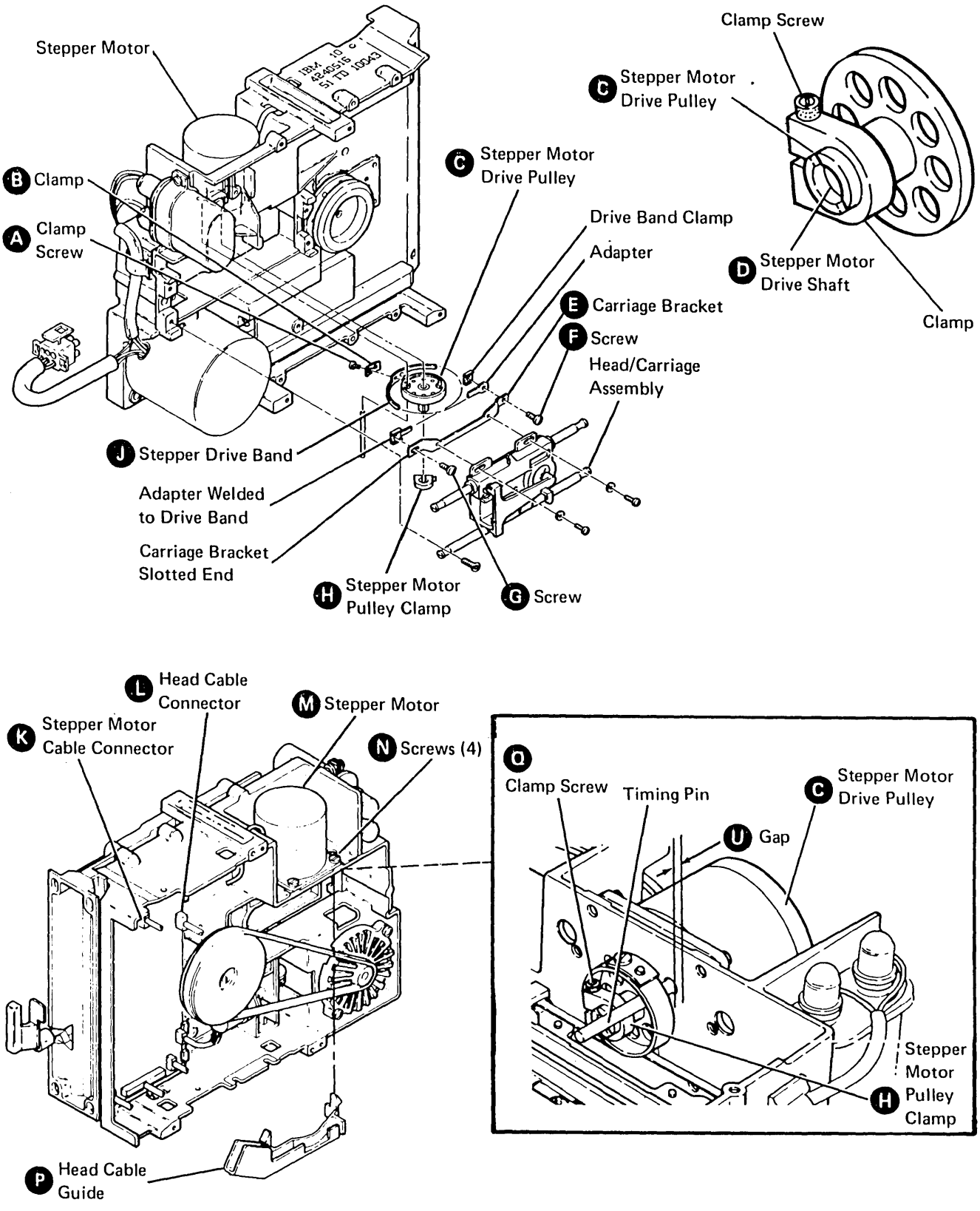

Figure E-33. Stepper Motor

E.3.5.3 Stepper Pulley and Clamp Removal

See Figure E-34.

1. Power down.
2. Remove the drive band (see paragraph E.3.5.7).
3. Measure and record the gap, C, between the stepper motor pulley and the casting.

   Gap is:_____.
4. Loosen the clamp screw, B; then remove the pulley, D, and the clamp, A.

E.3.5.4 Stepper Pulley and Clamp Replacement

See Figure E-34.

1. Reinstall the pulley, D, the clamp, A, and the clamp screw, B. The gap should be the same as in step 3 of paragraph E.3.5.3. Ensure that the clamp is even with the end of the stepper motor drive shaft.
2. Reinstall the drive band. Go to Head/Carriage Replacement (paragraph E.3.2.5, step 5).

E.3.5.5 Drive Band Service Check

See Figure E-34.

1. Power down.
2. Turn the stepper motor pulley by hand between tracks 00 and 76.
3. If the drive band does not track parallel to the pulley edge, F, go to Drive Band Adjustment (paragraph E.3.5.6, step 2).

   If the band shows signs of physical damage, F, exchange the band (see paragraphs E.3.5.7 and E.3.5.8).

E.3.5.6 Drive Band Adjustment

See Figure E-35, Parts 1 and 2.

1. Power down.
2. Remove the head connector, M, from the control card.
3. Remove the head cable guide, N.
4. Place the head/carriage assembly, G, at track 40. (Insert the timing pin, R, into the timing hole in the casting to align the head/carriage assembly, G, at track 40.)
5. Loosen the three mounting screws, A, F, and H, that attach the band to the pulley, C, and the carriage bracket, E.
6. Tighten screw F. (Ensure that the band, L, remains parallel to the carriage bracket, E.)
7. Tighten screw A. (Ensure that the band remains parallel to the pulley edge, U.)
8. Block the head/carriage assembly, G, about 25 mm (1 inch) from the end of the casting, O.
9. Pull on the loose end of the band with 2.5 ± 0.25 pounds' force, P, and tighten the screw, H. (Ensure that the band remains parallel to the pulley edge, U. If it does not, repeat the adjustment, starting at step 5.)
10. Move the carriage to track 00 and then to track 76, and ensure that the band, L, tracks parallel to the pulley edge, U.
11. Adjust the head/carriage assembly, G (go to paragraph E.3.2.3, step 12).

E.3.5.7 Drive Band Removal

See Figure E-35, Parts 1 and 2.

1. Power down.
2. Remove the head connector, M, from the control card.
3. Remove the head cable guide, N.

   Observe the position of the band, L, and clamp, S, before performing the next step.

Warning: The band, L, is easily damaged, T. Do not bend, crease, or scratch the band.

4. Remove the three mounting screws, A, F, and H, and the clamp, B, that attach the band, L, to the stepper motor pulley, C, and the carriage bracket, E.
5. Remove the band assembly.
6. If you have entered this procedure from Stepper Pulley and Clamp Removal (paragraph E.3.5.3), return to step 3 of paragraph E.3.5.3.

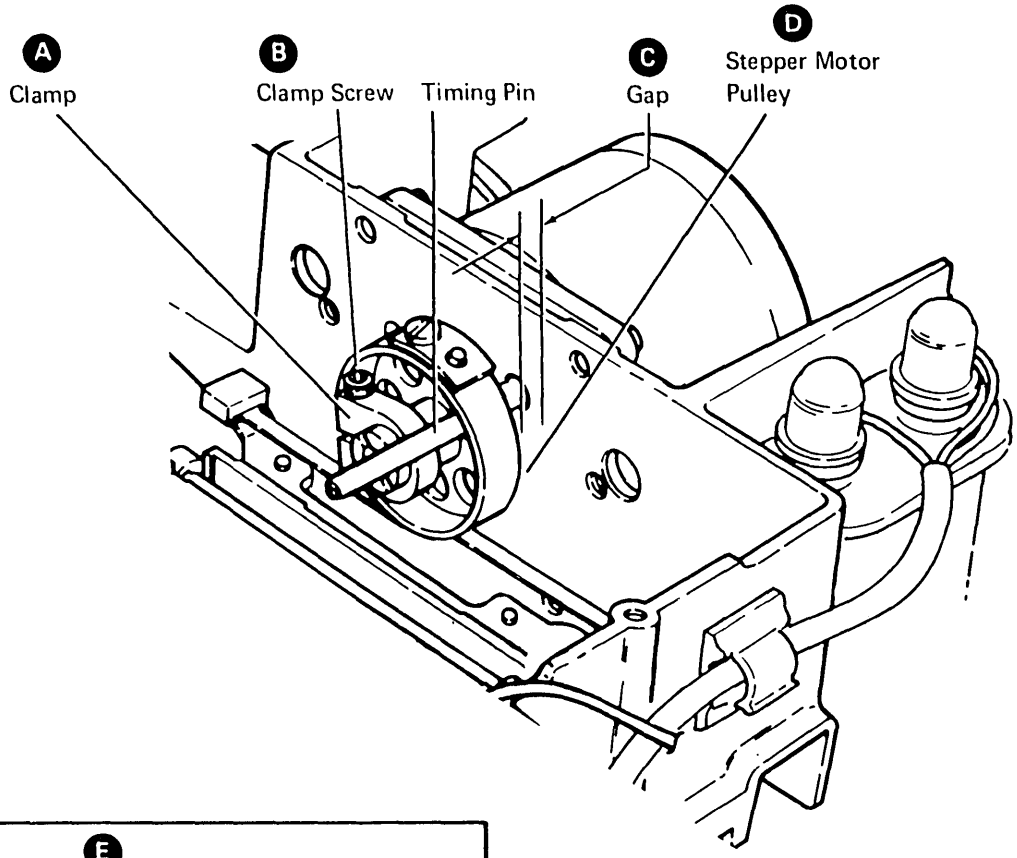

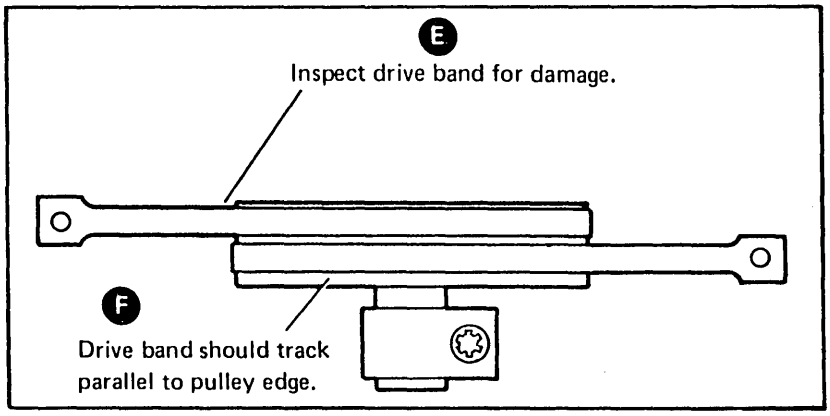

Figure E-34. Stepper Motor Pulley and Clamp Removal and Replacement

E.3.5.8 Drive Band Replacement

See Figure E-35, Parts 1 and 2.

Warning: The band, L, is easily damaged, T. Do not bend, crease, or scratch the band. Do NOT use a damaged band.

1. Attach the end of the band, L, with the welded adapter, K, to the slotted end, J, of the carriage bracket. Leave the clamp screw, H, loose.
2. Attach the band to the stepper motor pulley, C, with the clamp screw, A, and the clamp, B. Ensure that the band is parallel to the pulley edge, U.
3. Attach the other end of the band to the carriage bracket with the screw, F, and the drive band clamp, D. Ensure that the band is parallel to the carriage bracket.
4. Adjust the drive band. (Go to step 8 of paragraph E.3.5.6.)

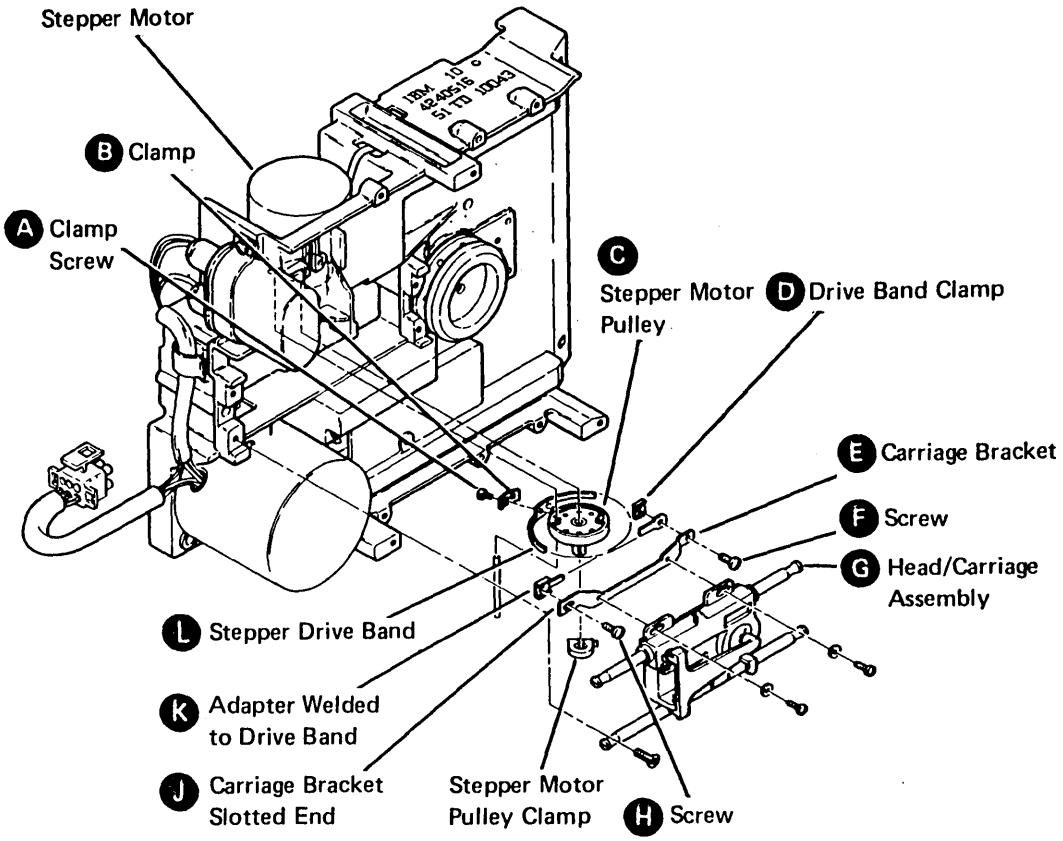

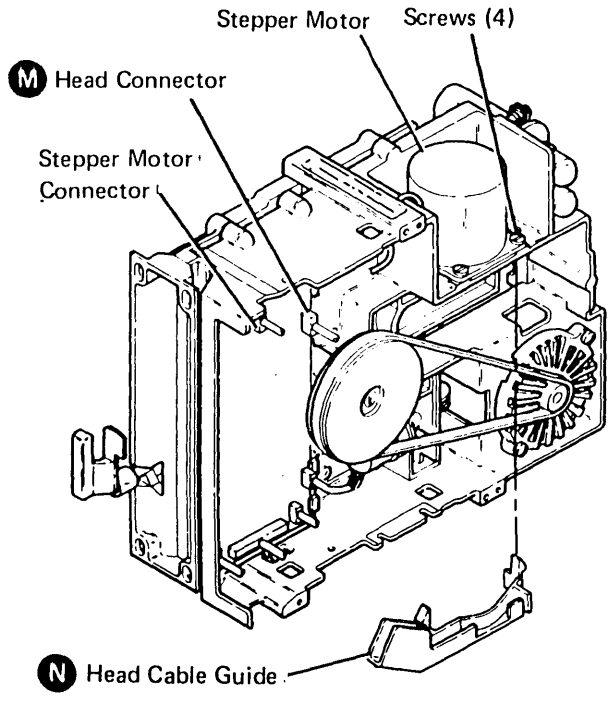

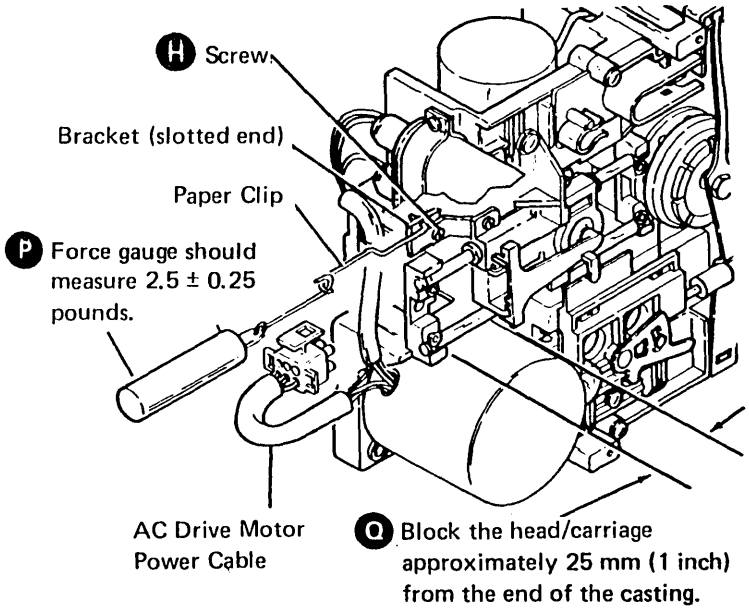

Figure E-35 (Part 1 of 2). Drive Band Adjustments

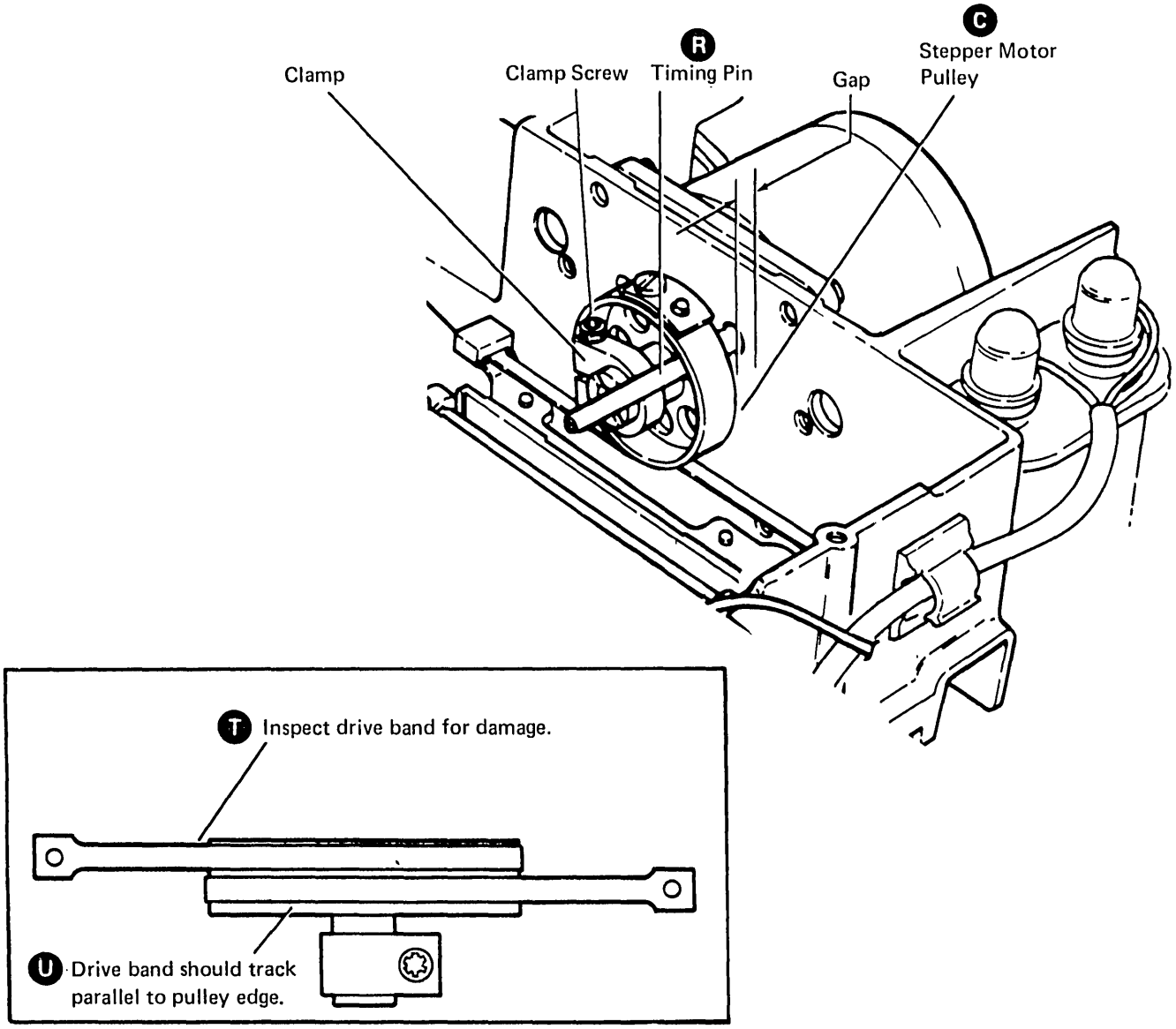

Figure E-35 (Part 2 of 2). Drive Band Adjustments

E.3.6 LED and PTX Assemblies

E.3.6.1 Diskette Speed Service Check

See Figure E-36.

1. Insert a diskette 1, and close the operator knob. See Diskette Use (paragraph E.1.1.2).
2. To activate the head load solenoid, install a jumper, (A), from TPF01 (ground) to TPHLD (-'head load').
3. Set up an oscilloscope as shown in the chart, (E).

Note: *Use a Tektronix 453, 454, or a similar oscilloscope with x10 probes.*

4. Observe an index pulse width of 1.5 to 3.0 ms, (C), occurring every 166.7 ± 4.2 ms, (B). Pulse amplitude should be between 2.4 and 4.2 Vdc, (D).
5. Remove the jumper.
6. Remove the diskette. See Diskette Use (paragraph E.1.1.2).

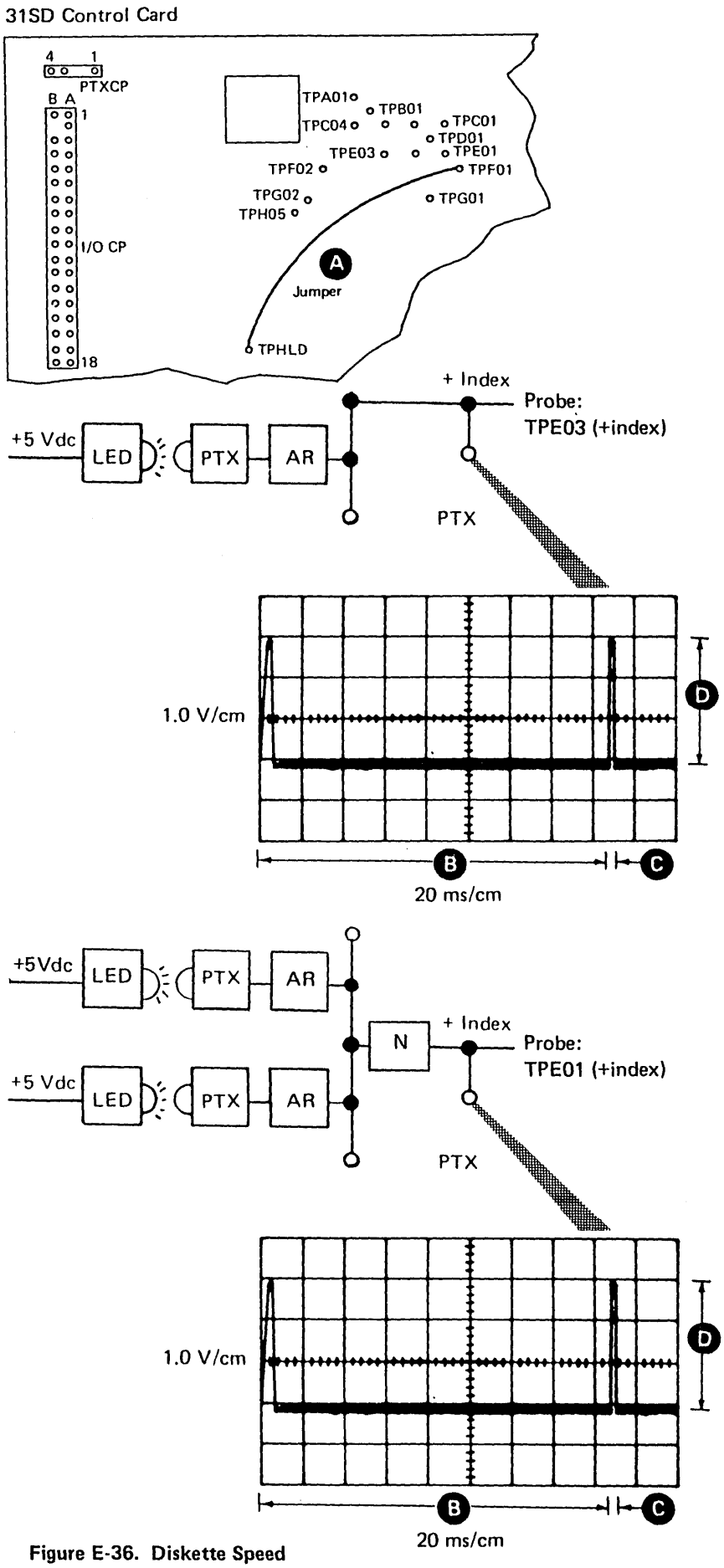

E Oscilloscope Settings

Channel A sweep mode	Normal
Channel A level	+
Channel A coupling	DC
Channel A slope	+
Channel A source	Internal
Trigger	Normal
Mode	Channel 1
Channel 1 volts/division	1.0 V/cm
Channel 1 input	DC
Times per division	20 ms
Channel 1 probe to	+Index Test Pin

Figure E-36. Diskette Speed

E.3.6.2 LED Output Service Check

See Figure E.37.

1. Connect the negative probe, (C), of the multimeter to the TPF01 (ground) on the control card, (A).
2. Set the multimeter scale to 5 Vdc, and connect the positive probe, (B), to the LED voltage test pin TPLED.
3. Check for a voltage level of 1 Vdc to 2 Vdc, (D).

E.3.6.3 LED Removal

See Figure E-38.

1. Power down.
2. Remove the LED connector, (B), from the control card.
3. Remove the LED cable. (Note the cable path for future replacement.)
4. Remove the LED mounting screw, (D); then remove the LED assembly, (C).

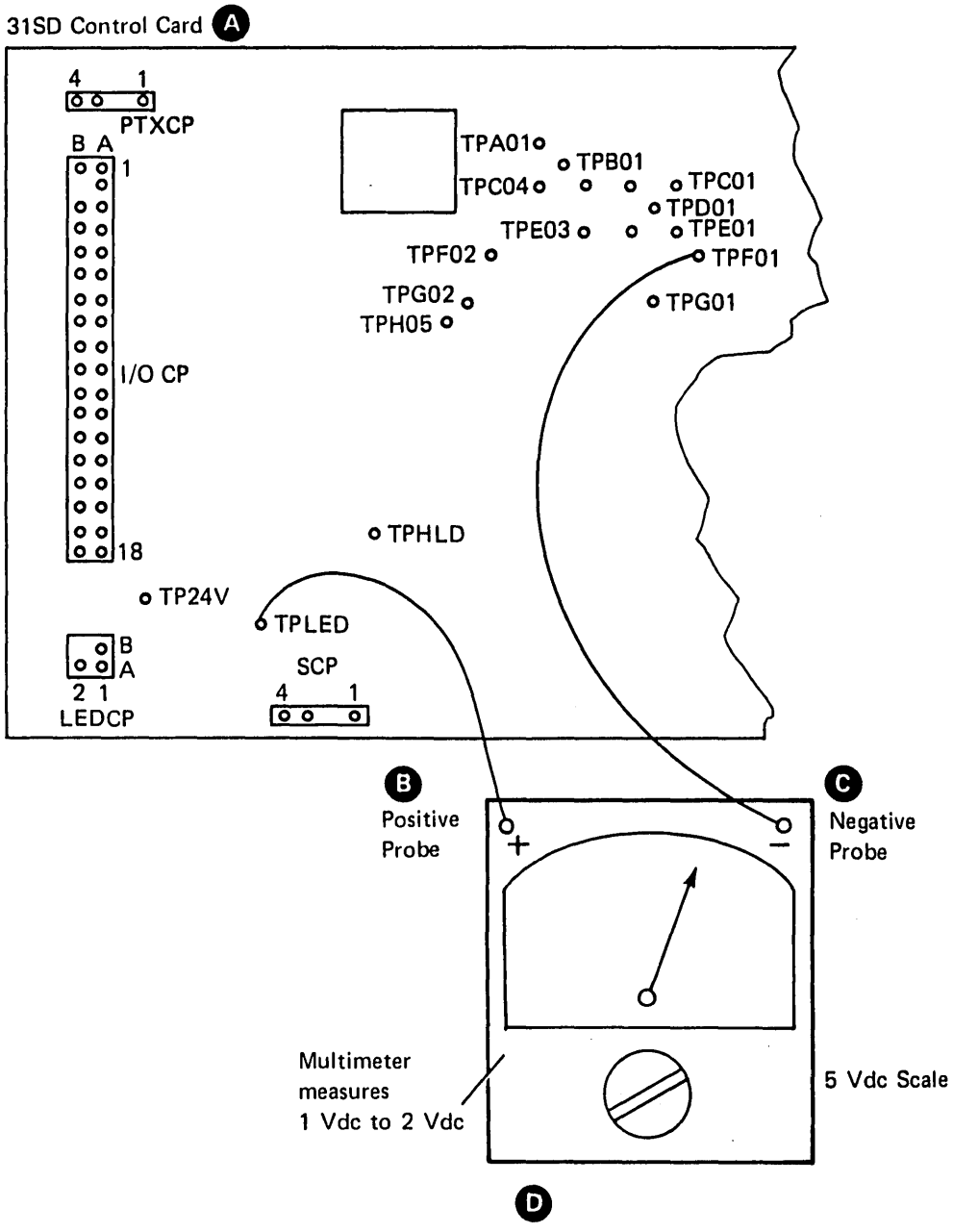

Figure E-37. LED Output Check

E.3.6.4 LED Replacement

See Figure E-38.

1. Reinstall the LED cable, the LED assembly, (C), and the mounting screw, (D), on the diskette guide, (A).
2. Reconnect the LED connector, (B), to the control card.

E.3.6.5 PTX Amplifier Service Check

See Figure E-39.

1. Power down.

DANGER
Voltage is still present at the socket when the power cable is disconnected.

2. Disconnect the ac drive motor power cable, (A).
3. Remove the PTX connector, (B), from the control card.
4. Power up.
5. Connect the positive probe, (E), of a multimeter, (D), (15 Vdc scale) to the index test pin (TPE03) on the control card.
6. Connect the negative probe, (F), of the multimeter of TPF 01 (ground).
7. Check the multimeter, (D), for a reading of less than 1 Vdc.

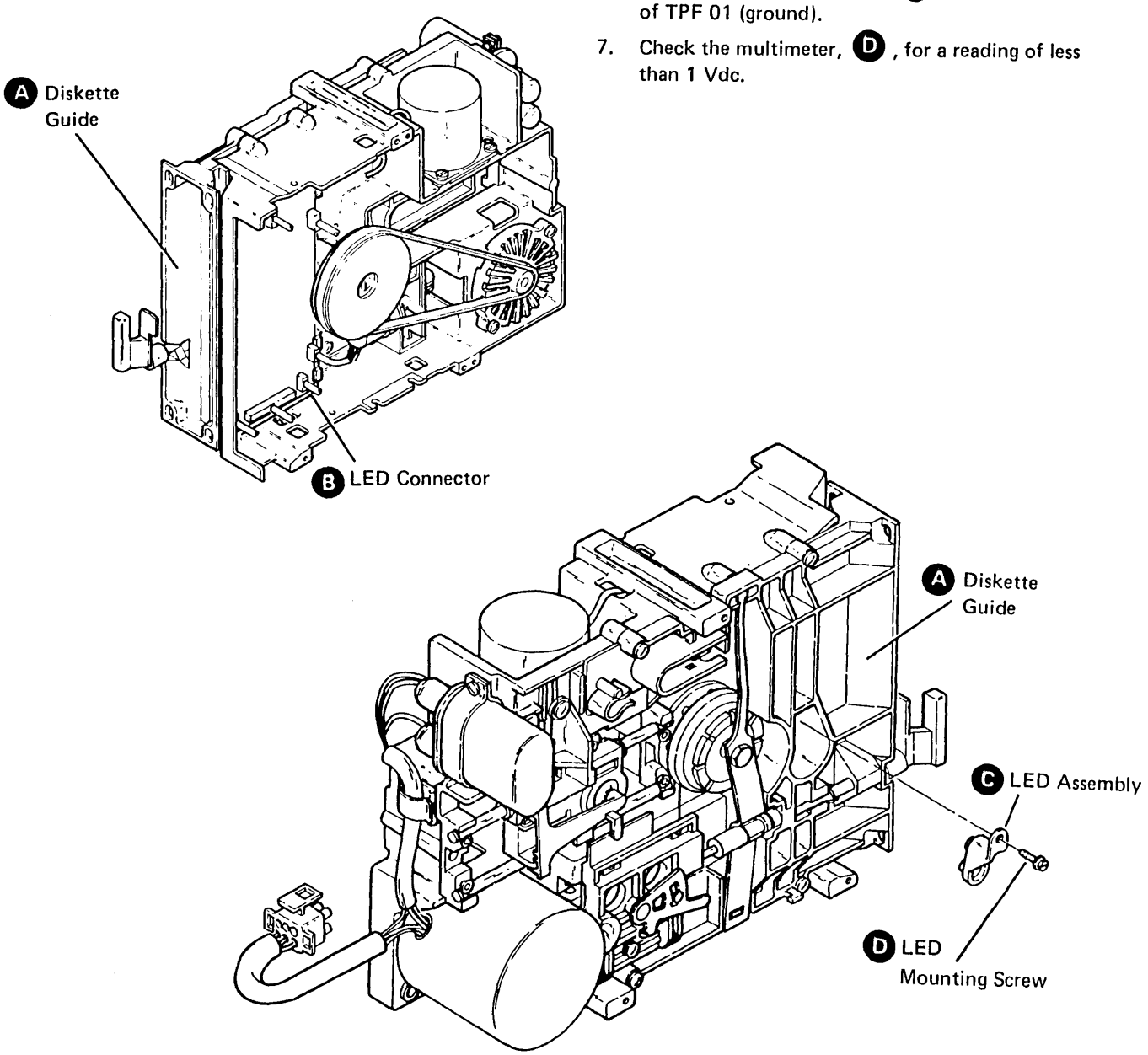

Figure E-38. LED Removal and Replacement

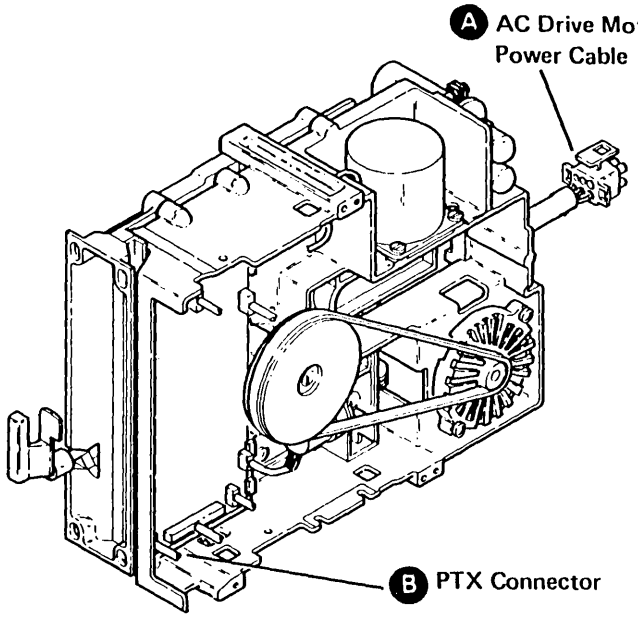

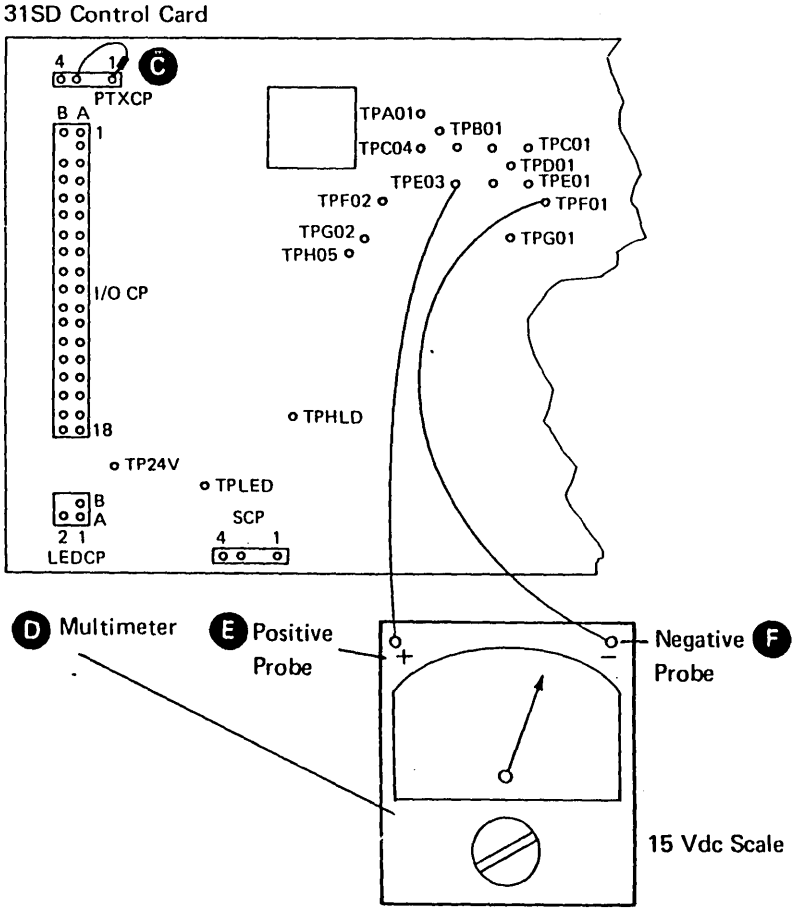

Figure E-39. PTX Amplifier Service Check

8. Install one end of a jumper, C, to pin A03 of the PTXCP socket on the control card.
9. Observe the multimeter, and touch the other end of the jumper several times to pin A01 of the PTXCP socket on the control card. The multimeter should read 2.5 Vdc or more when the test pin is touched. (A wrong measurement can occur the first time the test pin is touched.)
10. Power down.
11. Remove the jumper.
12. Reinstall the PTX connector on the control card.
13. Reconnect the drive motor power cable.
14. Power up.

E.3.6.6 PTX Removal

See Figure E-40

1. Power down.
2. Remove the LED connector, F, from the control card. (Note the cable path for easier replacement.) Pull the cable and the connector through the casting.
3. Turn the operator knob, A, to the closed position.
4. Loosen the lever screw, R.
5. Push the bail, Q, inward slightly, and disconnect the bail actuator cable eyelet, I, from the hook, N, on the bail lever, S.
6. Turn the operator knob, A, to the open position.

Warning: Damage to the head, H, can occur if the pressure pad, J, is permitted to hit the head.

7. Remove the four diskette guide mounting screws, P.
8. Remove the diskette guide, M, by lifting it up and carefully sliding the bail, Q, from under the head load arm, G.
9. Remove the five remaining connectors, B, from the control card. (Note the connector locations and cable paths for easier replacement.)
10. Loosen the control card retainer screw, E.

Warning: Be careful not to damage the control card.

11. Turn the two control card retainers, D, out of the control card path, and remove the control card, C. (Note the position of the control card for easier replacement.)
12. Remove the PTX mounting screw, L, and the PTX assembly, K. (Note the cable path for future replacement.)

E.3.6.7 PTX Replacement

See Figure E-40.

1. Reinstall the PTX assembly, K, and the PTX mounting screw, L.
2. Reinstall the control card, C, and turn the two retainers, D, inward until they prevent the control card from moving.
3. Tighten the two retainer screws, E.
4. Reinstall the five connectors, B, on the control card.
5. Reinstall the diskette guide, M. Place the bail below the head load arm, G.
6. Reinstall the four diskette guide mounting screws, P.
7. Reinstall the LED connector, F, on the control card. Go to Bail Replacement (paragraph E.3.3.6, step 2).

E.3.7 Diskette Drive Control Card

E.3.7.1 Control Card Removal

See Figure E-41.

1. Power down.
2. Remove the six connectors, A, from the control card.
3. Loosen the two retainer screws, D, and turn the two retainers, C, outward until they are no longer in the path of the control card, B.
4. Remove the control card.

E.3.7.2 Control Card Replacement

See Figure E-41.

1. Reinstall the control card, B.
2. Turn the two retainers, C, inward slightly until they prevent the card from moving.
3. Tighten the two retainer screws, D.
4. Reinstall the six connectors, A, on the control card.
5. Power up.

E.3.7.3 Control Card Test Pins and Connector Pins

See Figure E-42.

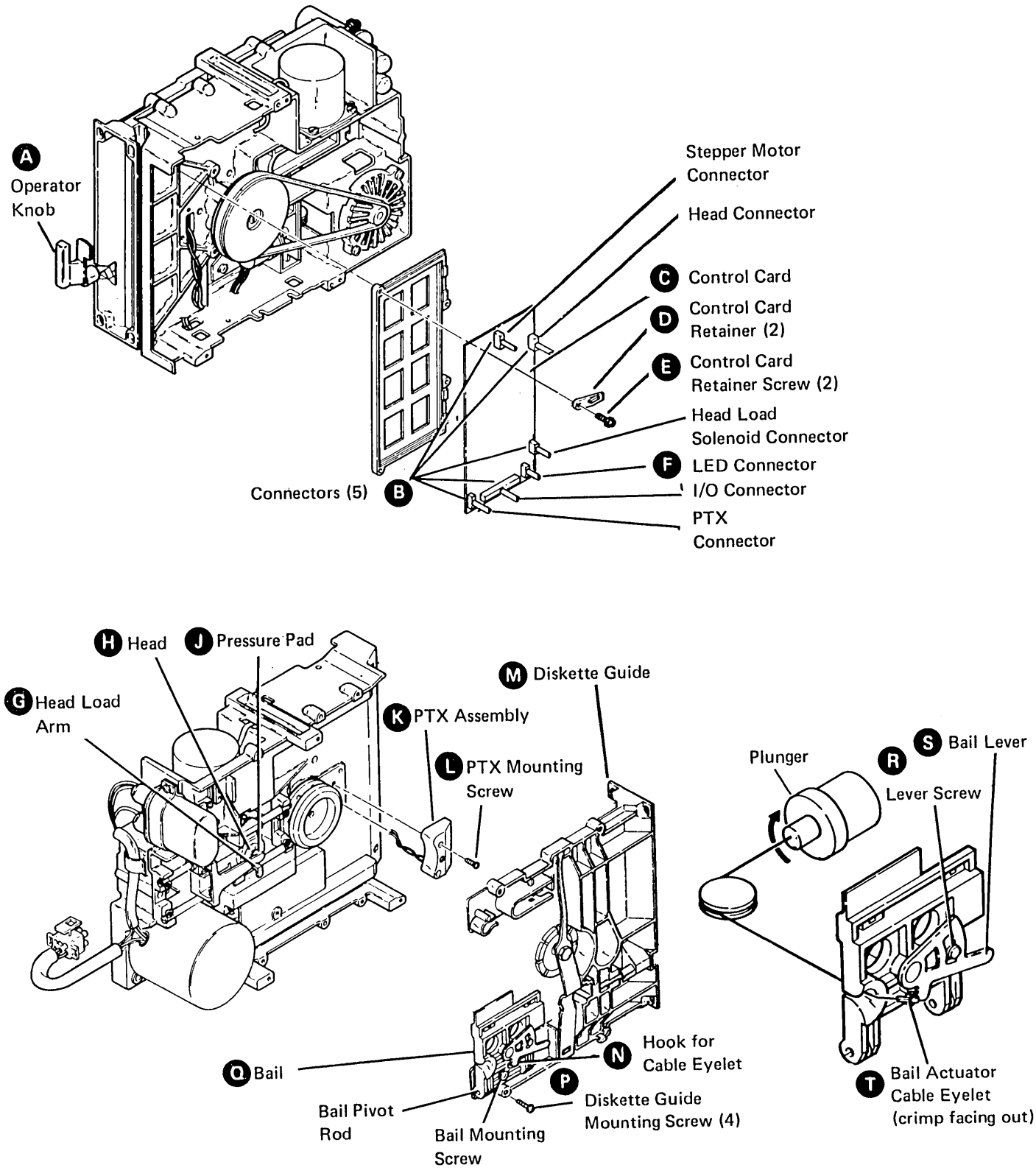

Figure E-40. PTX Removal and Replacement

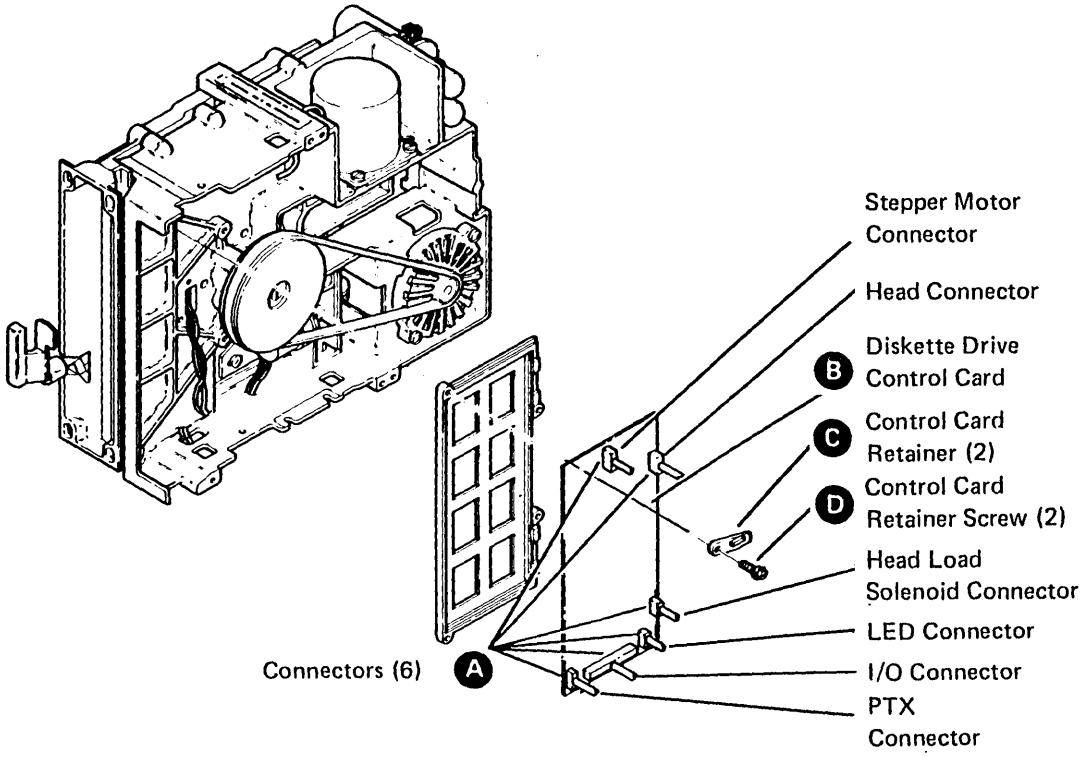

Figure E-41. Diskette Drive Control Card

31SD Control Card

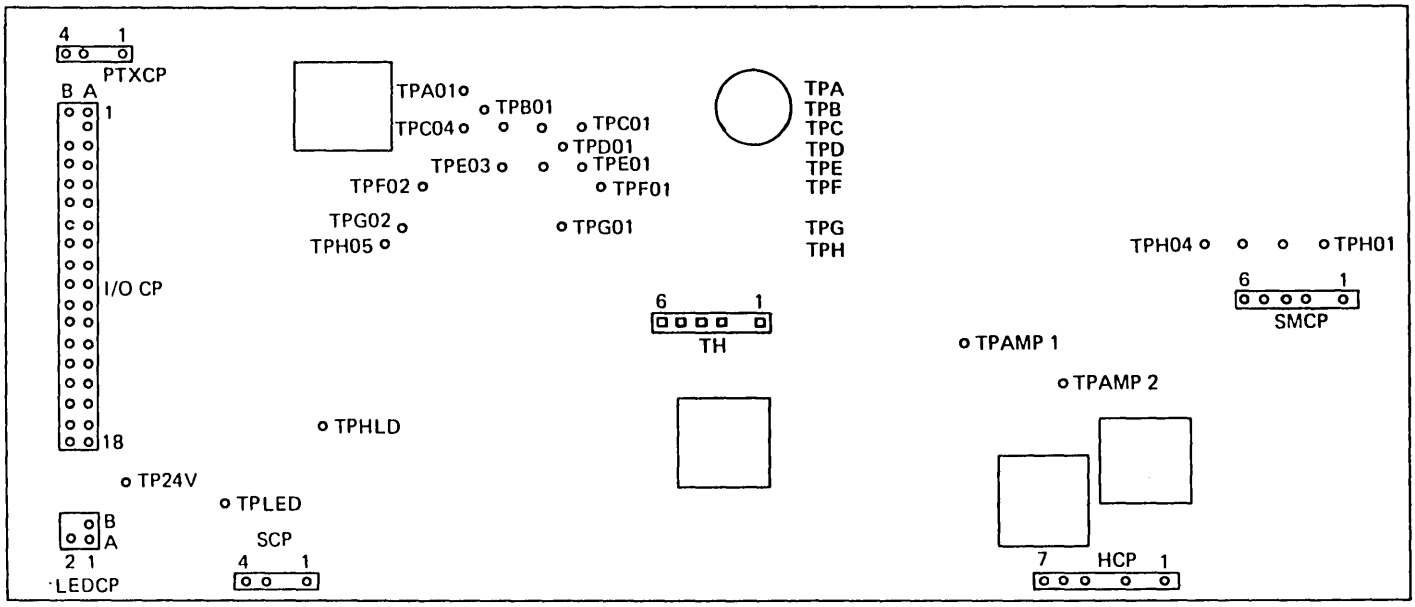

PTXCP – PTX Connector Pins
I/O CP – I/O Connector Pins
LEDCP – LED Connector Pins
SCP – Solenoid Connector Pins
HCP – Head Connector Pins
SMCP – Stepper Motor Connector Pins

31SD Control Card Cable

Test Points	Line Names
TH01	Diff Read B
TH02	No Pin
TH03	Diff Read A
TH04	Not Assigned
TH05	-Disable Stepper Motor
TH06	+18V

Test Points	Line Names
TPA01	+5 Vdc
TPB01	-5 Vdc
TPC01	+Access 1
TPC02	D1 PTX
TPC03	Write Data
TPC04	Ground
TPD01	+Inner Tracks
TPE01	+Access 0
TPE02	+Head Engage
TPE03	+Index
TPF01	Ground
TPF02	+Write/Erase Enabled

Test Points	Line Names
TPG01	+File Data
TPG02	+Erase Gate
TPH01	MC-3
TPH02	MC-2
TPH03	MC-1
TPH04	MC-0
TPH05	+Write Gate
TPAMP1	Preamp TP1
TPAMP2	Preamp TP2
TPHLD	-Head Load
TP24V	+24 Vdc
TPLED	31SD LED Voltage

Figure E-42. 31SD Control Card and Cable Pins

Appendix F. IBM 51TD Diskette Drive Maintenance

Safety Information

The CE Safety practices, located at the front of this manual, should be reviewed before you service the 51TD Diskette Drive. To prevent personal injury and machine damage, observe all DANGER, CAUTION, and Warning notices, making sure you fully understand them.

AC voltages are present on the 51TD drive motor connector and capacitor terminals when the drive motor is running. The motor and the solenoid become hot after continuous use; let the parts cool before attempting servicing. The following DANGER, CAUTION, and Warning notices appear in this appendix in the sequence shown:

DANGER
Input ac voltage is present in the prime power box when the 3274 I/O (on/off) switch is in the O (off) position.

DANGER
Voltage is still present at the socket when the power cable is disconnected.

DANGER
High voltage may be present at the capacitor terminals.

CAUTION
The motor case becomes hot after continuous use.

CAUTION
The solenoid case becomes hot after continuous use.

Warning: Do not attempt to remove the collet/flat spring before removing the bail. Too much pressure or binding can damage the spring.

Warning: Ensure that the heads do not hit each other when the bail is removed from under the head arm.

Warning: Too much pressure or binding of the flat spring will damage the spring.

Warning: The head/carriage assembly is adjusted and tested at the factory. Do not attempt to adjust or repair any part of this assembly.

Warning: The head/carriage assembly adjustment check must be performed with the diskette drive installed (or with the diskette drive in the same position as when installed) or the adjustment might not be accurate.

Warning: The stepper drive band assembly can be easily damaged. Do not bend, crease, or scratch the band. Do not use a damaged band.

Warning: When you install the head/carriage assembly, ensure that a strip of clean paper is placed between the diskette drive heads to protect them during installation; also ensure that the bail is under the head load arm. Ensure that the bail return spring is correctly installed. Ensure that the band is not damaged in any way.

Warning: Do not let the solenoid plunger and cable turn while you make the bail adjustment.

Warning: When the stepper motor pulley is tightened by the clamp screw, ensure that the pin located on the back of the stepper motor pulley remains within the cutout slot on the casting.

Warning: Be careful not to damage the control card.

F.1 Introduction

F.1.1 General Description

The IBM 51TD Diskette Drive is a direct-access, read/write, data storage device. This drive uses the flexible magetic diskette for data entry, data exchange, and data storage.

The 51TD Diskette Drive, shown in Figure F-1, can read from and write on one side of a diskette 1 and either side of a diskette 2.

F.1.1.1 Diskette Description

The IBM 51TD Diskette, shown in Figure F-2, is a thin, flexible disk, permanently protected in a jacket. Information is stored magnetically on the diskette surface, which is covered with magnetic recording material. The diskette is free to turn inside the jacket. As the diskette turns, the inner surface of the jacket cleans the diskette.

The diskette jacket has three holes. The first hole permits the diskette drive to turn the diskette, the second hole permits the read/write head to make contact with the diskette, and the third hole permits the phototransistor light to go through the index hole to sense the type of diskette. For storage, the diskette, which is permanently protected in a thin jacket, can be placed in an envelope. Data can be read from or written on either side of the diskette.

Information is written on the diskette in tracks. A track is a circular path on the diskette surface. Information is magnetically written on or read from a track by a read/write head as the diskette turns. See Figure F-2.

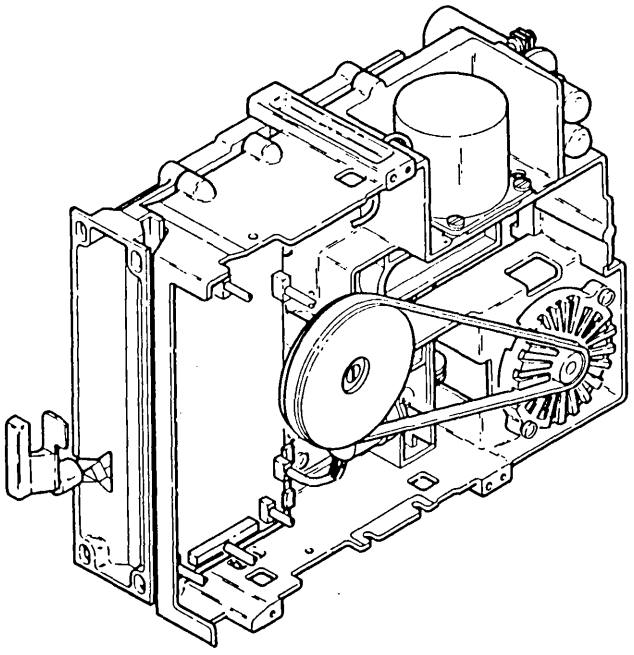

Figure F-1. IBM 51TD Diskette Drive

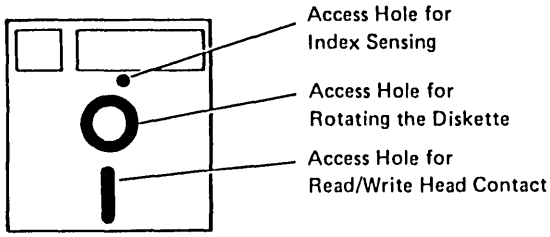

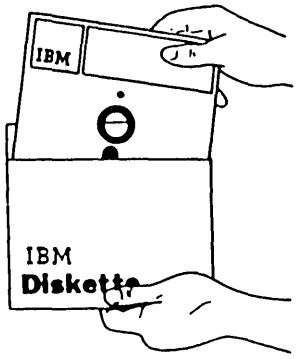

Diskette

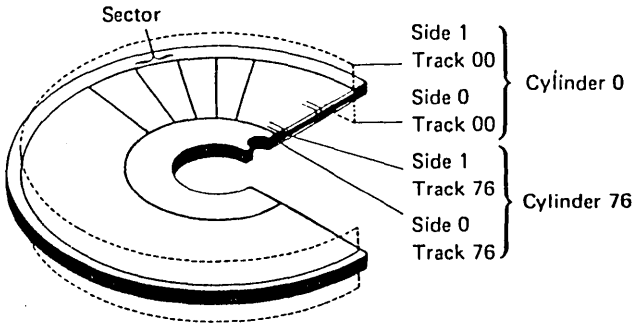

Figure F-2. 51TD Diskette

There are 77 tracks on each side of a diskette. Track 00, which is the outside track, is reserved as a label track and cannot be used for data. Tracks 75 and 76, the two tracks nearest the hub, are reserved as alternative tracks and can be used for data only if another track becomes damaged. A total of 74 tracks on one side of a diskette 1 and on each side of a diskette 2 and 2D are available for recording data.

A sector is that part of a track used for one record of information.

A cylinder is defined as the tracks of a diskette that can be read from or written on without moving the read/write heads.

F.1.1.2 Diskette Insertion and Removal (Figure F-3)

To insert a diskette:

1. Turn the operator knob to the open position.
2. Remove the diskette from its envelope.
3. Place the diskette squarely into the diskette drive (with the label facing the knob).
4. Turn the operator knob to the closed position.

To remove a diskette:

1. Turn the operator knob to the open position.
2. Remove the diskette.
3. Insert the diskette into its envelope.

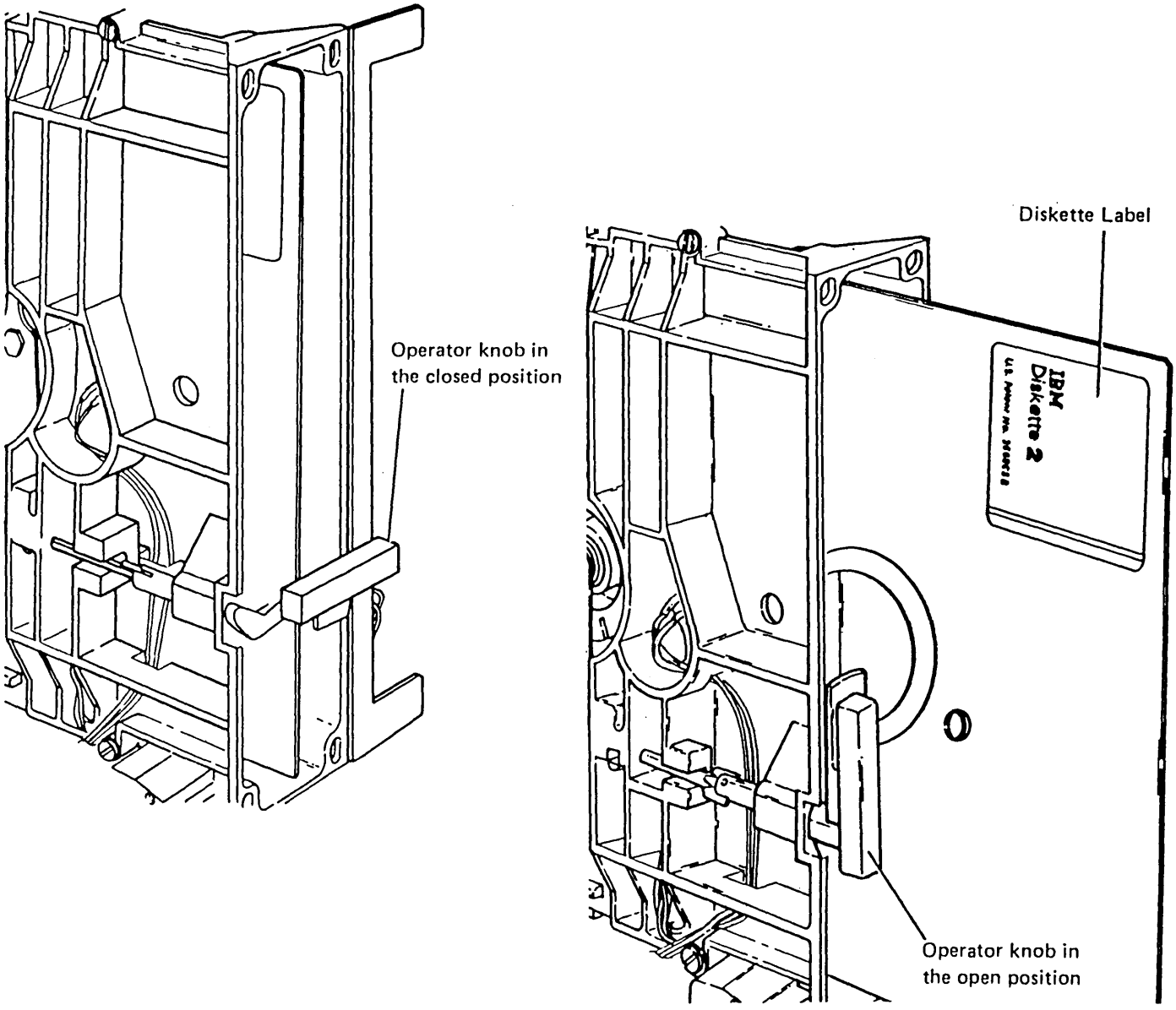

Figure F-3. Diskette Insertion

F.1.1.3 Maintenance

The diskette drive needs no planned maintenance. The MAPs guide the CE in diagnosing diskette drive failures: the MAPs also send the CE to maintenance procedures in this appendix when an adjustment, service check, or FRU replacement is needed.

Should a diskette drive unit fail (usually indicated by an IML failure code of 0010) the CE should only perform the diagnostic procedures outlined in the MAPs before replacing the drive unit FRU. The CE should perform further repairs only if he or she is capable of doing so quickly.

The head/carriage assembly and the drive hub and pulley assembly are adjusted and tested at the factory. The head/carriage assembly can be exchanged in the field; the drive hub and pulley assembly cannot be exchanged in the field. If the track 40 adjustment surface or the device hub and pulley assembly is damaged, the diskette drive should be exchanged.

F.1.1.4 Special Tools

The CE must use the following special tools (shown in Figure F-4):

- Timing pin (B) (PN 5562019) to adjust or service the read/write head/carriage stepper motor pulley. (This part is supplied with each drive.)
- Force gauge (A) (PN 460870) to adjust or service-check the drive band tension.
- Spring (D) (PN 4240631) to keep the head/carriage in place against the thickness gauge when performing the head/carriage adjustments. (This part is supplied with each drive.)

  Note: Spring must match view (E).

- Clip (C) (PN 4240632) to keep the thickness gauge in contact with the track 40 adjustment surface.

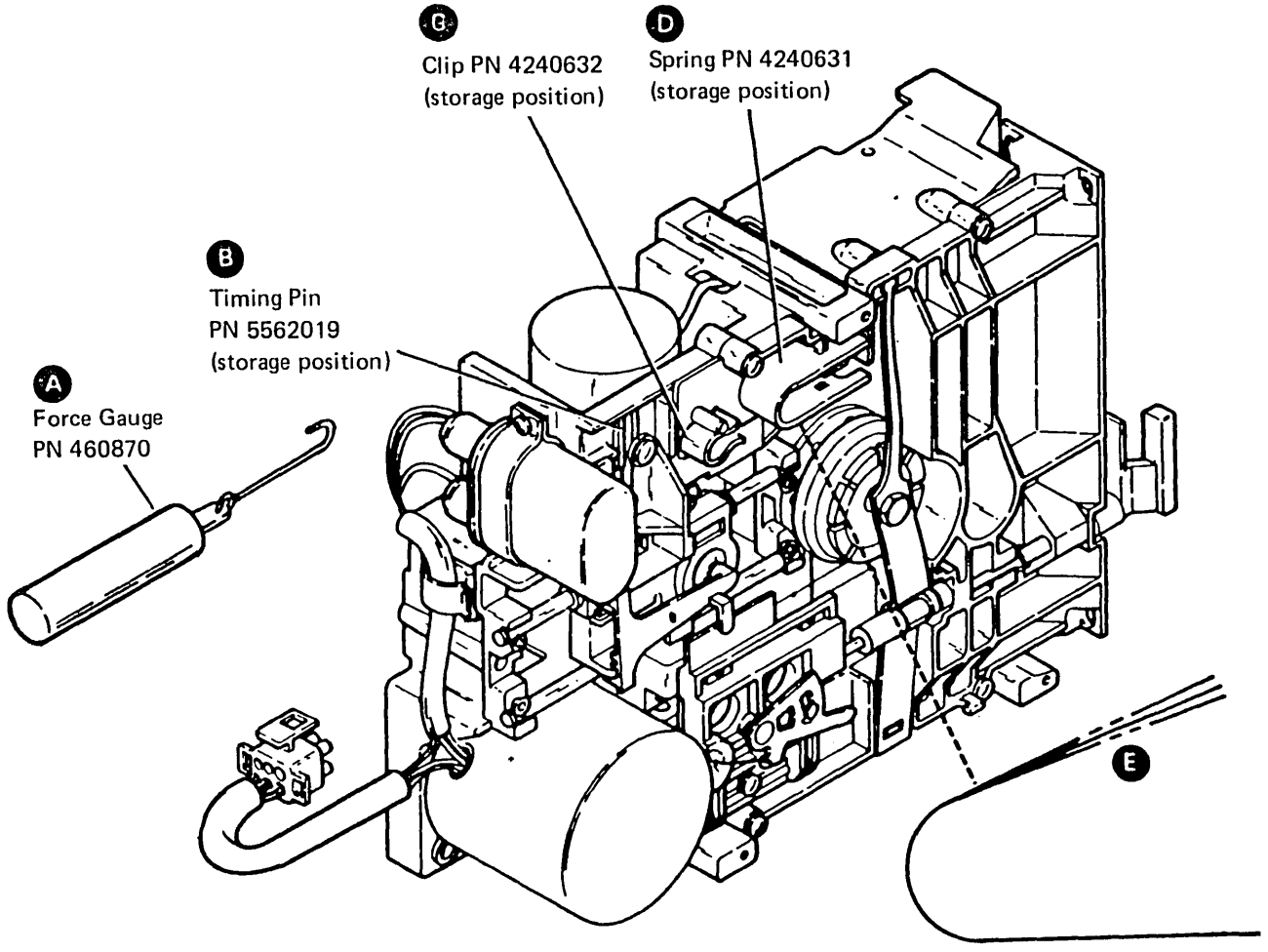

Figure F-4. 51TD Special Tools

F.1.2 Machine Characteristics

F.1.2.1 Physical Characteristics

The 51TD diskette weighs 5.0 kg (11.0 pounds) and has a speed of 360 rpm. See Figure F-5 for other physical characteristics.

F.1.2.2 Electrical Characteristics

The system supplies all the power needed to operate the diskette drive, which includes:

- All the following:

Logic Voltage (dc)	Maximum Operating Current (A)	Tolerance (%)
-5	0.08	±10
+5	0.50	±10
+24	0.50	±12

- A selection of the needed ac power from the following lists:

  -60 Hz, single-phase, ac power

Input Voltage (V)	Input Voltage Range	Average Operating Current (A)
100	90–110	0.30
110	96.5–119	0.30
120	104–127	0.30
127	111–137	0.30
200	180–220	0.20
208	180–220	0.20
220	193–238	0.20
240	208–254	0.20

-50 Hz, single-phase, ac power

Input Voltage (V)	Input Voltage Range	Average Operating Current (A)
100	90–110	0.30
110	96.5–119	0.30
200	180–220	0.25
220	193–238	0.20
230	202–249	0.20
240	210–259	0.20

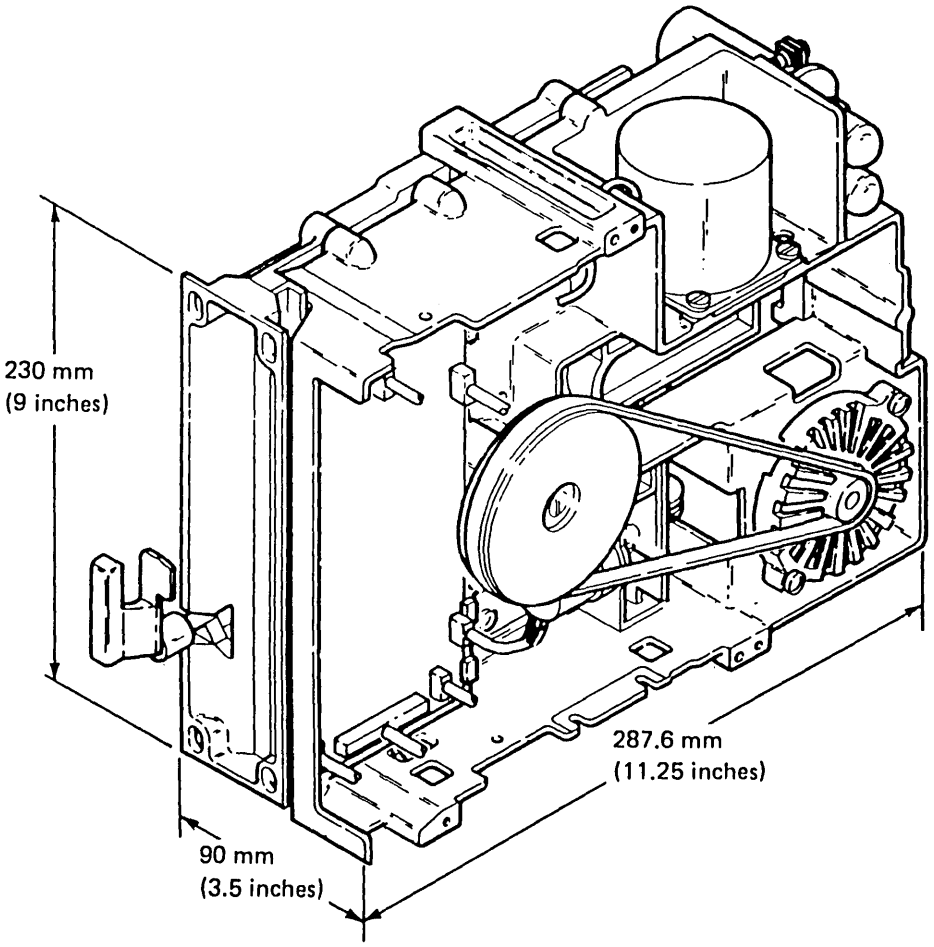

Figure F-5. 51TD Physical Characteristics

F.1.2.3 Environmental Characteristics

IBM diskette drives can be operated or stored in the following temperature and humidity ranges, shown in Figure F-6.

	Temperature		Relative Humidity
	Celsius	Fahrenheit	
Operate (Powered On)	10° to 40.6°	50° to 105°	8% to 80%
Store (Powered Off)	10° to 51.7°	50° to 125°	8% to 80%

Figure F-6. Environmental Characteristics

F.1.2.4 Functional Characteristics

The format of the data on a diskette is changed when the number of bytes written in a sector is changed. Diskettes are used with the formats shown in Figure F-7.

- The maximum number of formatted data bytes per diskette is shown in Figure F-8.
- Data rate: 250,000 bits (31,250 bytes) per second (FM).
- Cylinder-to-cylinder seek time: 5 ms, plus 35 ms for the head/carriage assembly to stop. (The total seek time is the number of cylinders the heads moved across multiplied by 5 ms, plus 35 ms.)
- Tracks per diskette side: 77 (cylinder 00 is the label cylinder; cylinders 01 through 74 are for data; cylinders 75 and 76 are reserved as alternative cylinders).

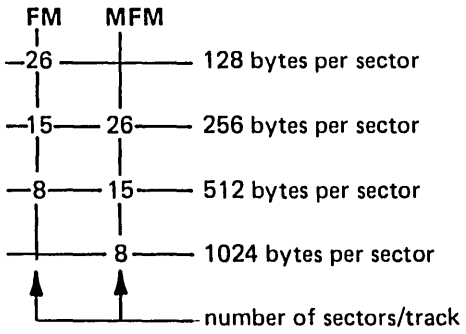

Figure F-7. Data Formats

	Diskette 1	Diskette 2	Diskette 2D
128 bytes per sector	246,272[1]	492,544[2]	
256 bytes per sector	284,160	568,320	985,088[3]
512 bytes per sector	303,104	606,208	1,136,640
1024 bytes per sector			1,212,416

[1] The total number of data bytes that can be stored on the diskette. The Basic Data Exchange Standards for exchanging information from one system to another using diskette 1 are:

- Use 128 bytes per sector.
- Do not use track 74.

The total number of usable data bytes then becomes 242,944.

[2] Basic Data Exchange for a diskette 2.

[3] Basic Data Exchange for a diskette 2D.

Figure F-8. Maximum Number of Formatted Data Bytes

F.1.3 Safety

F.1.3.1 Personal Safety

The system or device supplies ac and dc power. Ac voltages are present on the drive motor connector and capacitor terminals in the diskette drive when the drive motor is turning.

Motor and solenoid cases become hot after continuous use; let the parts cool before servicing them.

The DANGER and CAUTION notices throughout this appendix are personal safety precautions.

F.1.3.2 Machine Safety

Diskette drives can be damaged if they are not operated or serviced correctly. The Warning notices in this appendix are machine safety precautions.

Do not use IBM cleaning fluid or other cleaning fluids near plastic parts.

Never use damaged diskettes in a diskette drive. Diskettes that are physically damaged (creased or bent) or contaminated (by pencil marks, finger marks, or cleaning fluid) can cause data errors, equipment errors, or head damage.

F.1.4 Diskette Drive Parts (Figure F-9)

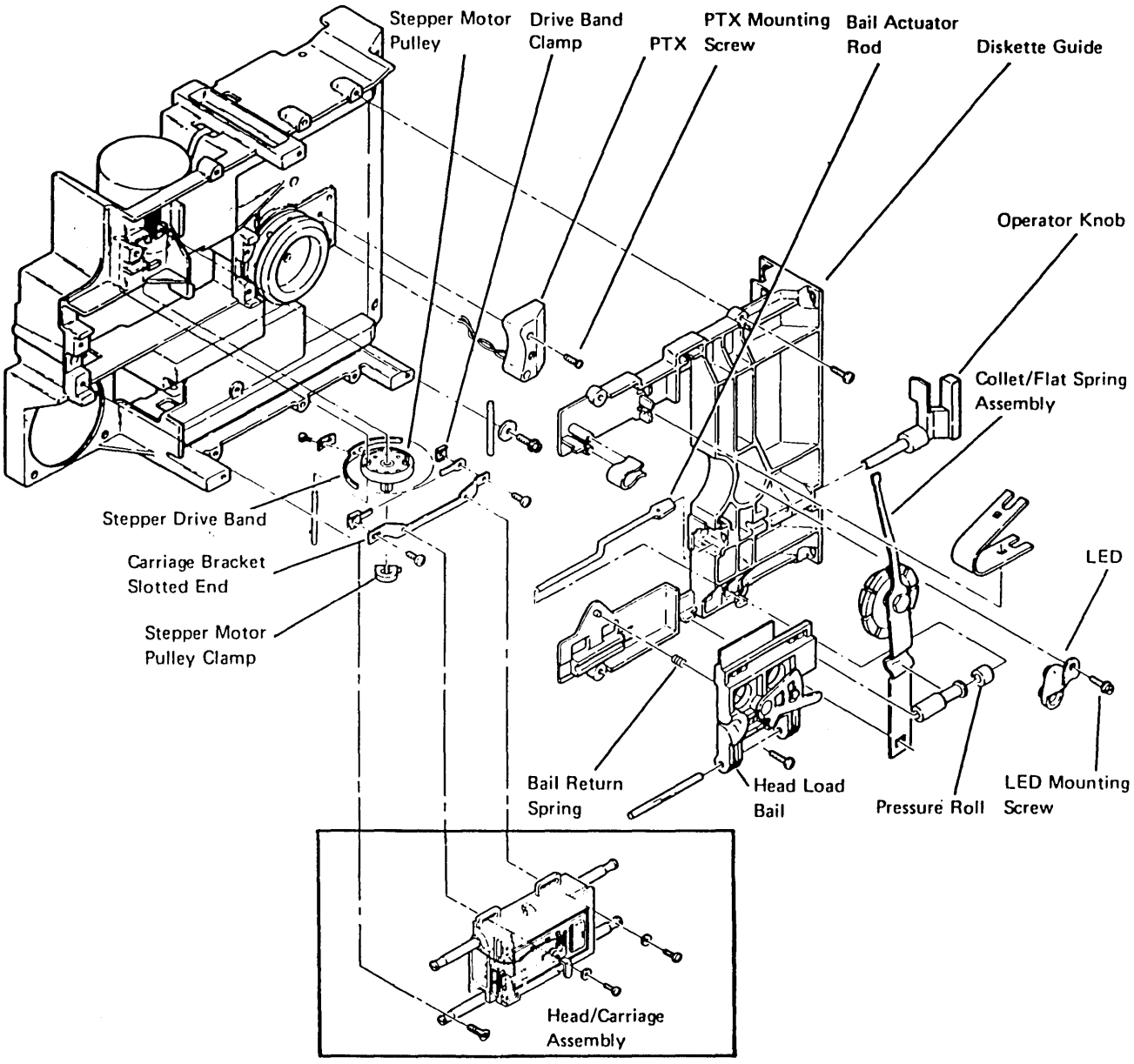

Figure F-9 (Part 1 of 5). Diskette Drive Parts

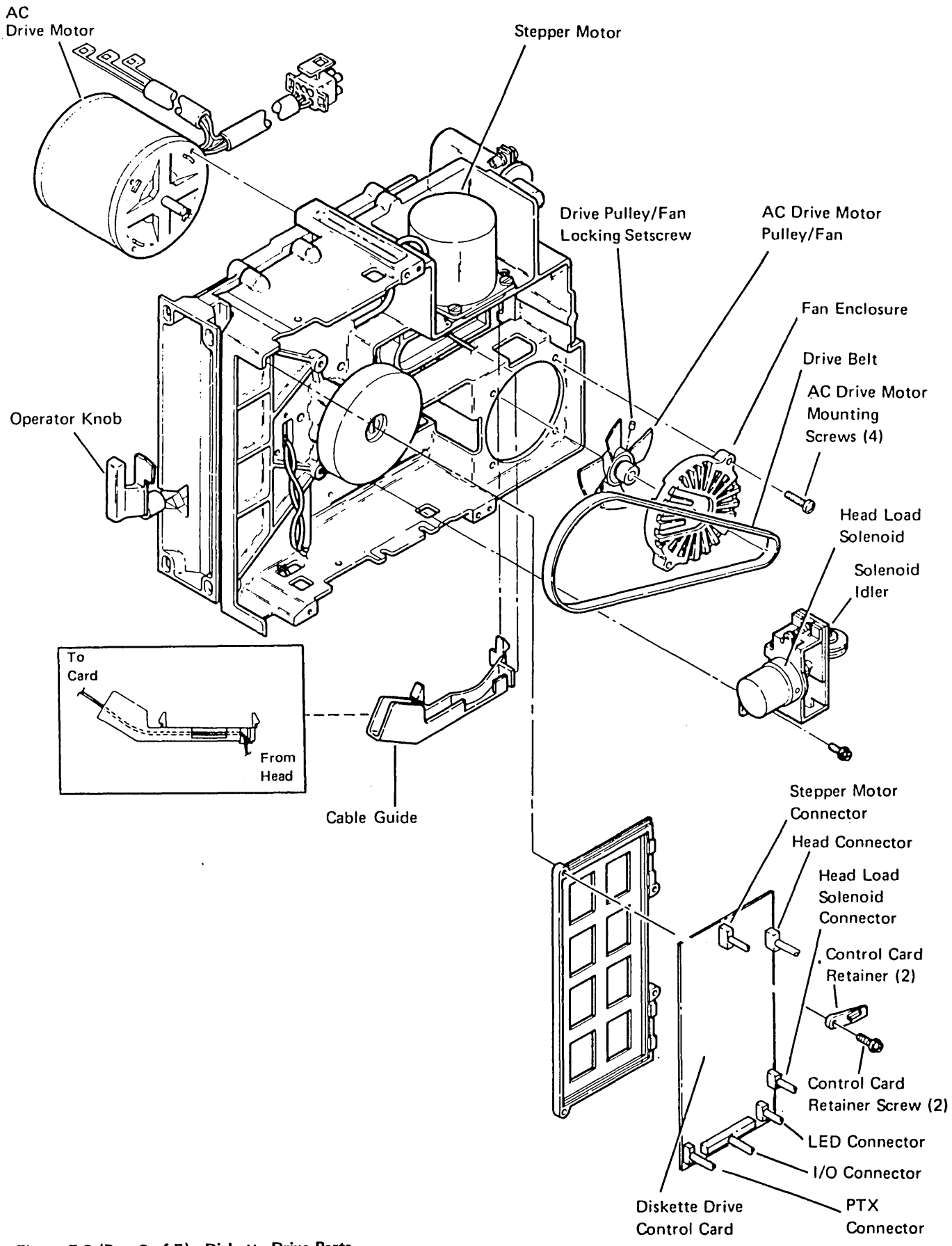

Figure F-9 (Part 2 of 5). Diskette Drive Parts

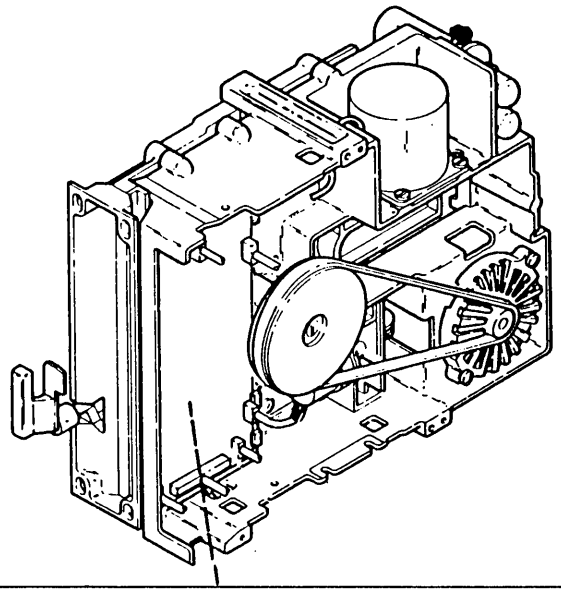

Control Card

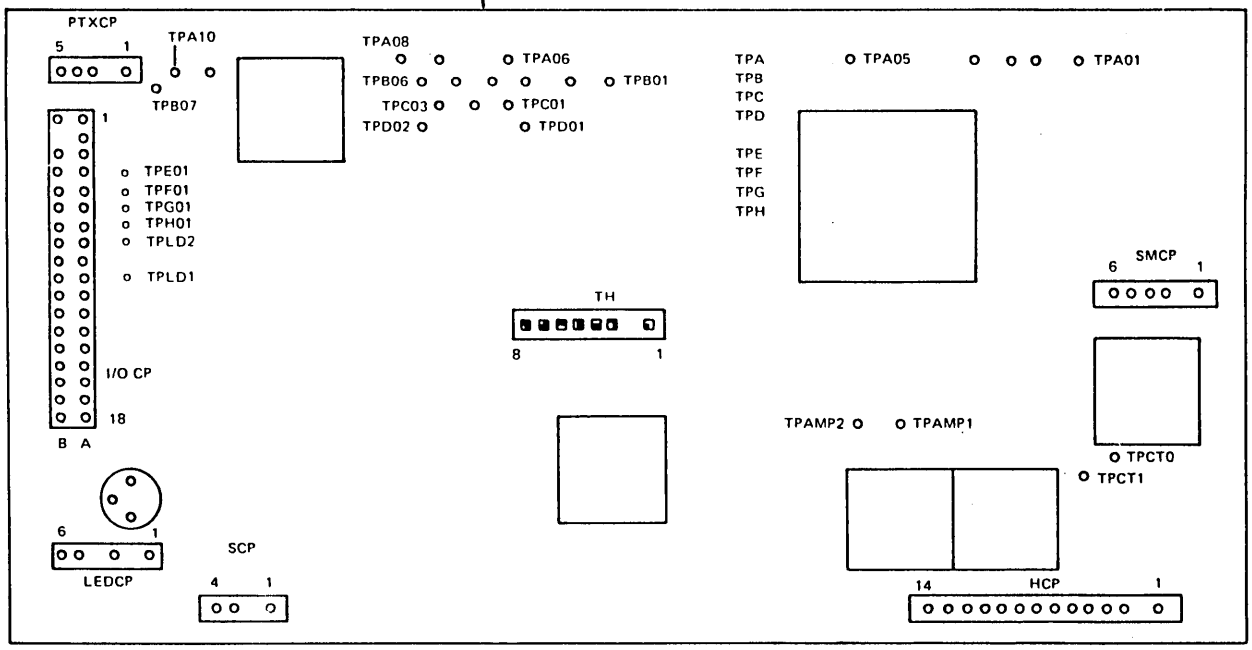

Control Card Cable

Test Points	Line Names
TH01	Diff Read B
TH02	No Pin
TH03	Diff Read A
TH04	High Gain
TH05	Disable Stepper Motor
TH06	+14V
TH07	Access Clamp Voltage
TH08	Oscillator

Test Points	Line Names
TPA01	MC-3
TPA02	MC-1
TPA03	MC-2
TPA04	MC-0
TPA05	Ground
TPA06	+Erase Gate
TPA07	Ground
TPA08	-Head Load
TPA09	+5V dc
TPA10	D2 PTX
TPB01	+24V dc
TPB02	Ground
TPB03	+Select Head 1
TPB04	+Write Gate
TPB05	+Head Engage
TPB06	Write Data

Test Points	Line Names
TPB07	D1 PTX
TPC01	+Access 0
TPC02	+Inner Tracks
TPC03	-5V dc
TPD01	+Access 1
TPD02	+Switch Filter
TPE01	+Index
TPF01	+Diskette Sense
TPG01	+Write Erase Enabled
TPH01	+File Data
TPLD2	D2 LED Voltage
TPLD1	D1 LED Voltage
TPAMP2	Preamp TP2
TPAMP1	Preamp TP1
TPCT0	Center Tap Head 0
TPCT1	Center Tap Head 1

Figure F-9 (Part 3 of 5). Diskette Drive Parts

1. Stepper Motor
2. AC Drive Pulley (With Fan Hidden)
3. AC Drive Belt
4. Solenoid Idler
5. Head Load Solenoid
6. Spindle Pulley
7. Diskette Drive Control Card
8. Diskette Locking Lever
9. Collet
10. Pressure Roll
11. Head Load Bail
12. AC Drive Motor
13. Head/Carriage Assembly
14. Timing Pin (Old)
15. Stepper Motor
16. Thickness Gauge Clip
17. Carriage Pressure Spring
18. Drive Hub
19. Collet Flat Spring
20. Timing Pin (New)

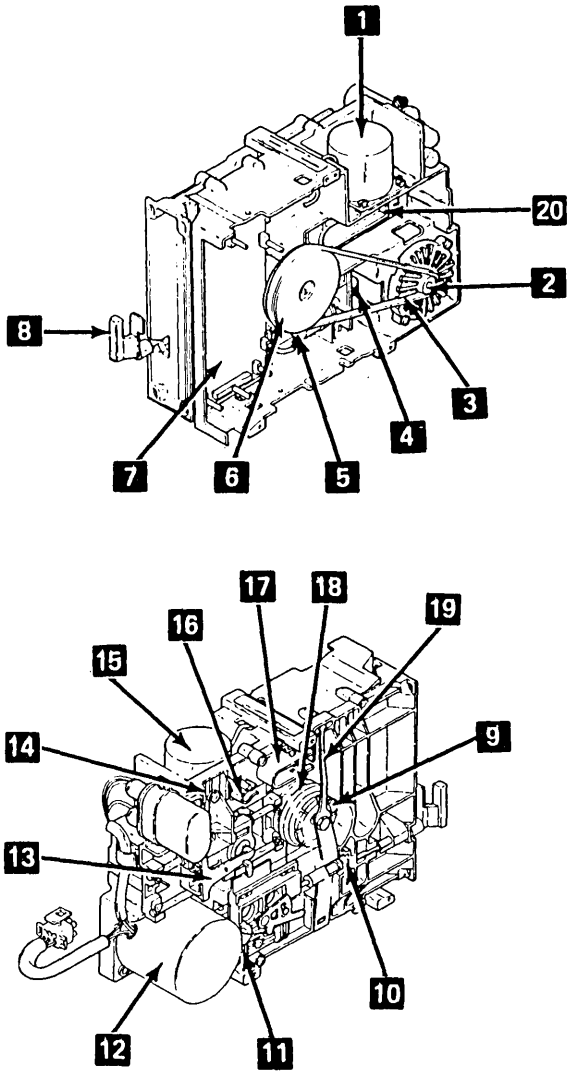

Figure F-9 (Part 4 of 5). Diskette Drive Parts

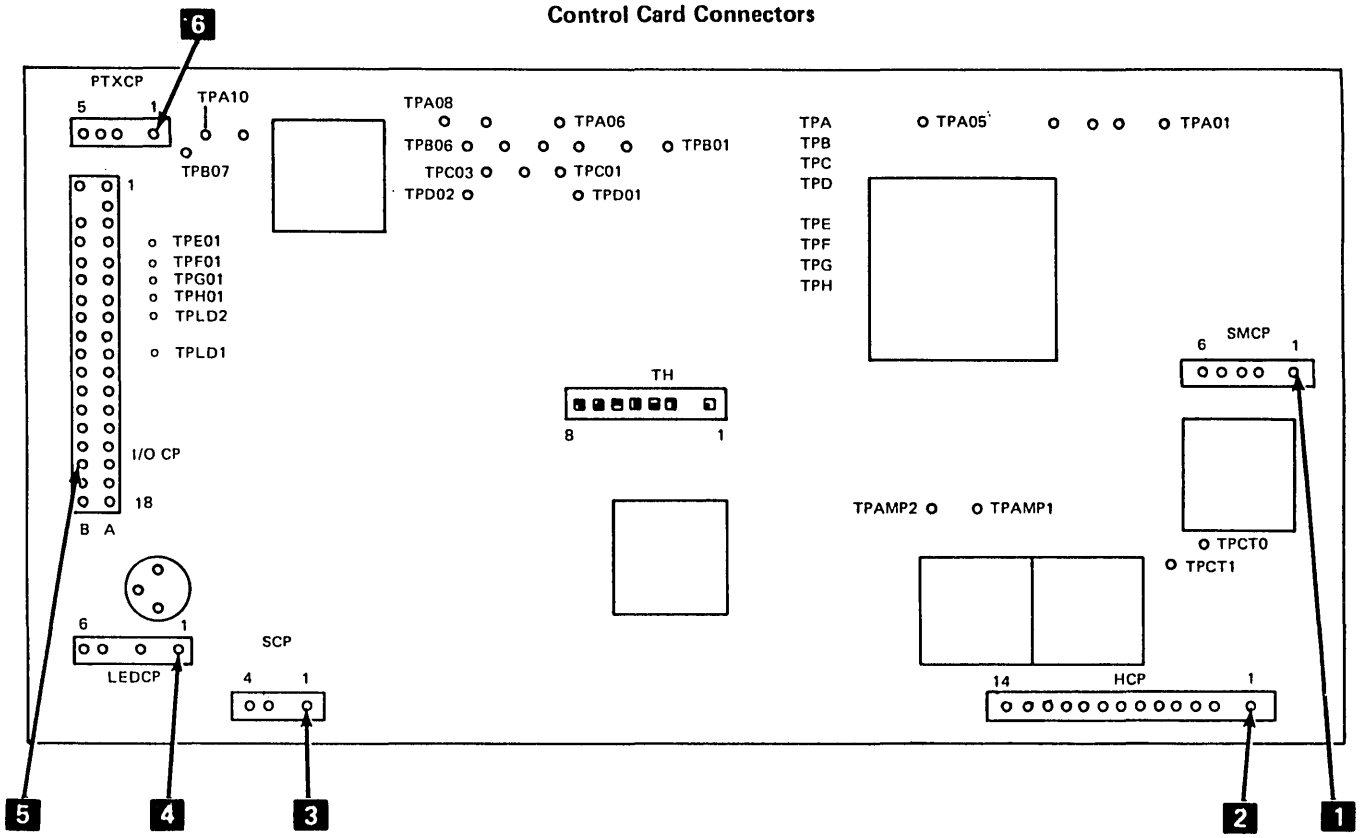

1 Stepper Motor Connector

A01	+24V
A02	blank
A03	MC-3
A04	MC-2
A05	MC-1
A06	MC-0

2 Head Connector

A01	not used
A02	blank
A03	head 0 read/write coil
A04	head 0 center tap
A05	head 0 read/write coil
A06	head 0 erase
A07	head 0 erase common
A08	ground
A09	ground
A10	head 1 erase common
A11	head 1 erase
A12	head 1 read/write coil
A13	head 1 center tap
A14	head 1 read/write coil

3 Solenoid Connector

A01	not used
A02	blank
A03	+head load
A04	-head load

4 LED Connector

A01	diskette 2, 2D ground
A02	blank
A03	diskette 2, 2D ground
A04	blank
A05	diskette 1 ground
A06	diskette 1 anode

5 I/O Interface Connector

A01	-5V
A02	power supply ground
A03–A18	ground
B01	+5V
B02	blank
B03	+24V
B04	+index
B05	+diskette 2 sense
B06	+write/erase sense
B07	+file data
B08	+inner tracks
B09	+erase gate
B10	+access 0
B11	+select head 1
B12	not used
B13	+access 1
B14	+write gate
B15	+head engage
B16	+switch filter
B17	write data
B18	not used

6 PTX Connector

A01	diskette 1 col (+5V)
A02	blank
A03	diskette 1 PTX emitter
A04	diskette 2, 2D PTX emitter
A05	diskette 2, 2D col (+5V)

Figure F-9 (Part 5 of 5). Diskette Drive Parts

F.2 Device Theory of Operation

The Diskette Drive is an I/O device that relies on the using system for power, commands, and control. The drive can read from, and write to either side of a diskette. This section contains theory information about the device interface, data flow, and operation of the diskette drive.

F.2.1 Control Card Interface

Cylinder access is shown in Figure F-10; the interface lines at connector A1 are shown in Figure F-11. Following is a description of the interface lines at connector A1:

Write Data: For each change of this signal, the current switches in the read/write head. This process records the data on the diskette surface.

+Inner Tracks: This line is active from track 43 through track 76. When this line is active, the write current through the data is decreased because the bit density increases toward the center tracks and, therefore, less write current is needed. This line is also used to increase the read amplifier gain from tracks 43 through 76.

+Select Head 1: This line, when active, selects head 1.

+Write Gate: This line activates the write circuits and deactivates the read circuits for a write operation.

+Erase Gate: This line activates the tunnel erase circuits during a write operation to erase the edges of the track just recorded. This erasing prevents crosstalk between tracks during later read operations.

+Switch Filter: This line is used with the Inner Tracks line to make corrections for bit shift on those tracks greater than cylinder 60 (for MFM encoding). The Switch Filter line is used only during a read operation.

+Write/Erase Enabled: When this line is active, either write or erase current has been enabled on the card.

File Data: This line is a series of clock and data pulses that represent the data read from the diskette surface. The VFO circuits supplied by the using system separate the clock pulses from the data pulses.

+Index: This line indicates the start of a track. This 1.5- to 3.0-ms pulse occurs every 166.7 ms.

Diskette Sense: When this line is active, it indicates that a diskette 2 or 2D is being used. This line is not activated by a diskette 1.

Access Lines 0 and 1: Sequentially activating the access signal lines causes the read/write head to move from one cylinder to the next. Note, in Figure F-10, that the sequence is repeated every four cylinders.

These two access signal lines, 0 and 1, are sequentially activated to cause the head to move in (toward the drive hub) or out (away from the drive hub).

+Head Engage: When it is active, this line loads the read/write head.

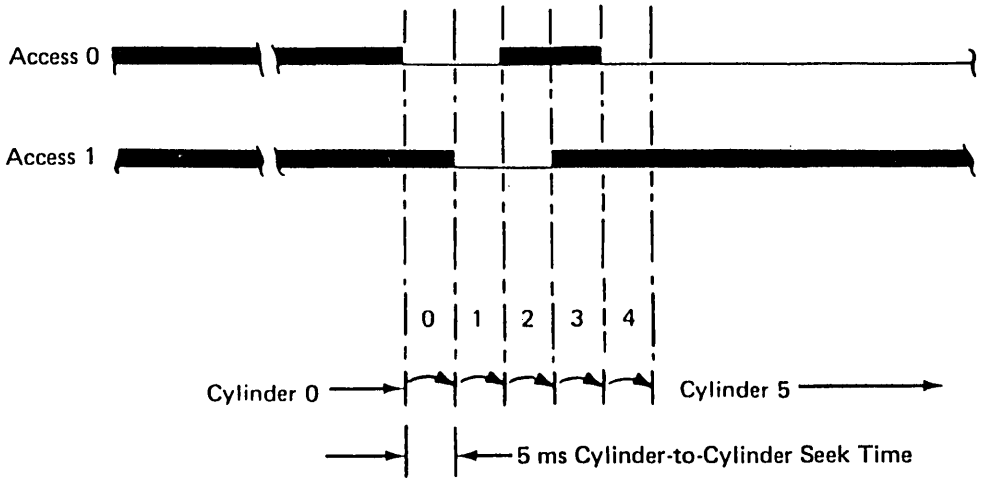

Figure F-10. Cylinder Access

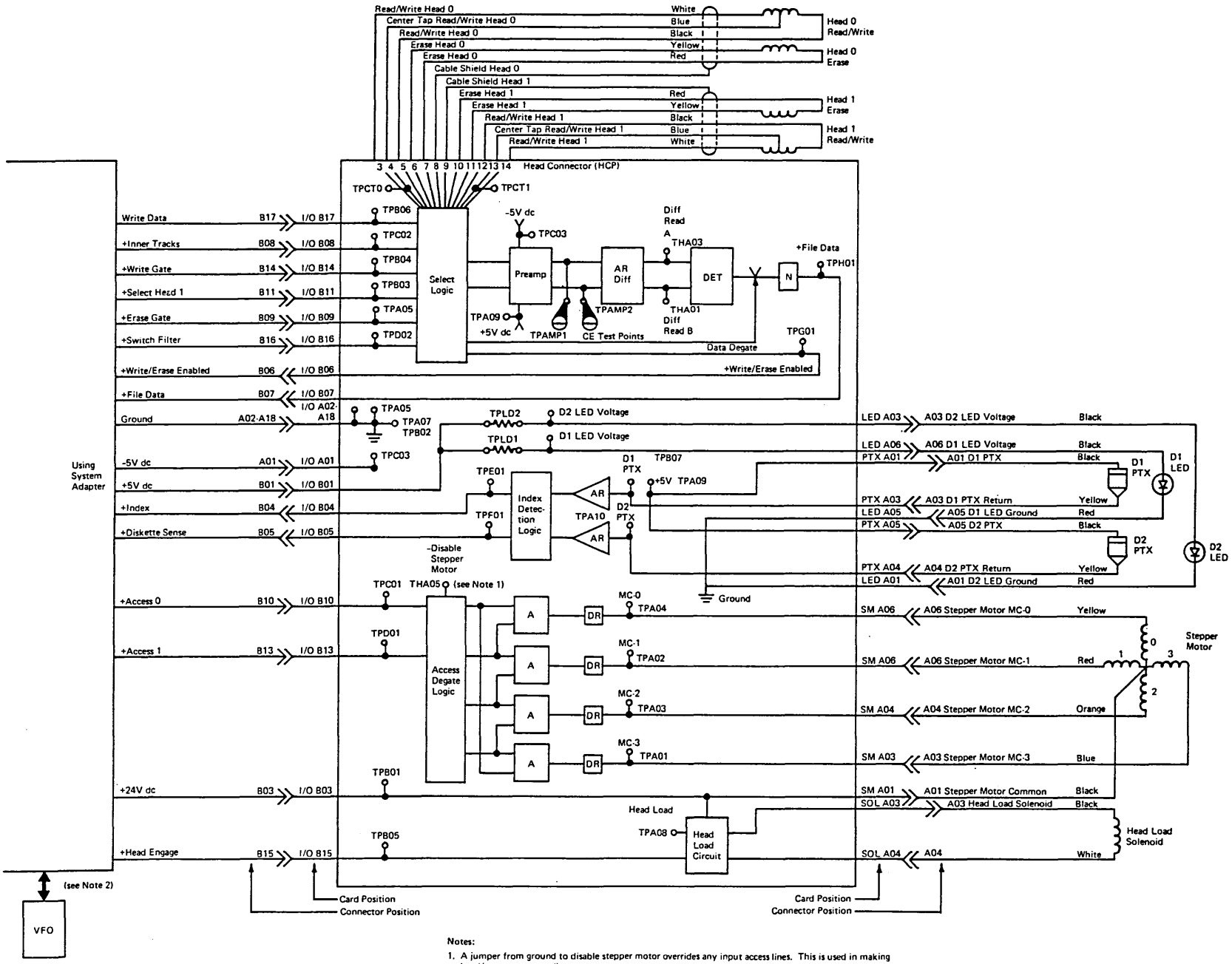

Figure F-11. Control Lines at Connector A1

Notes:

1. A jumper from ground to disable stepper motor overrides any input access lines. This is used in making head/stepper motor adjustments.
2. The variable frequency oscillator is packaged in the using system logic. The function of the variable frequency oscillator is to separate and clock pulses.

F.2.2 Mechanical Operation

Figure F-12 shows the operation of the two read/write heads on the 51TD Diskette Drive.

The operation of the 51TD is similar to that shown in Figure F-12, but has only one head.

- The diskette is ready to be inserted **1** .
- The diskette is inserted into the diskette guide **2** ; the operator closes the knob, which clamps the collet (R/W heads are now much nearer to the diskette).
- The head is loaded (touching the diskette) **3** . The solenoid is activated, the cable pulls the bail, and the bail lowers the head to the diskette.
- Read/Write operation takes place. The heads are moved to the desired cylinder on the disk when the system activates the two stepper motor access lines in a specific sequence.
- The head is released (deactivates the solenoid) **4** .
- The operator turns the knob to the open position; the diskette is released and then removed from the drive **5** .

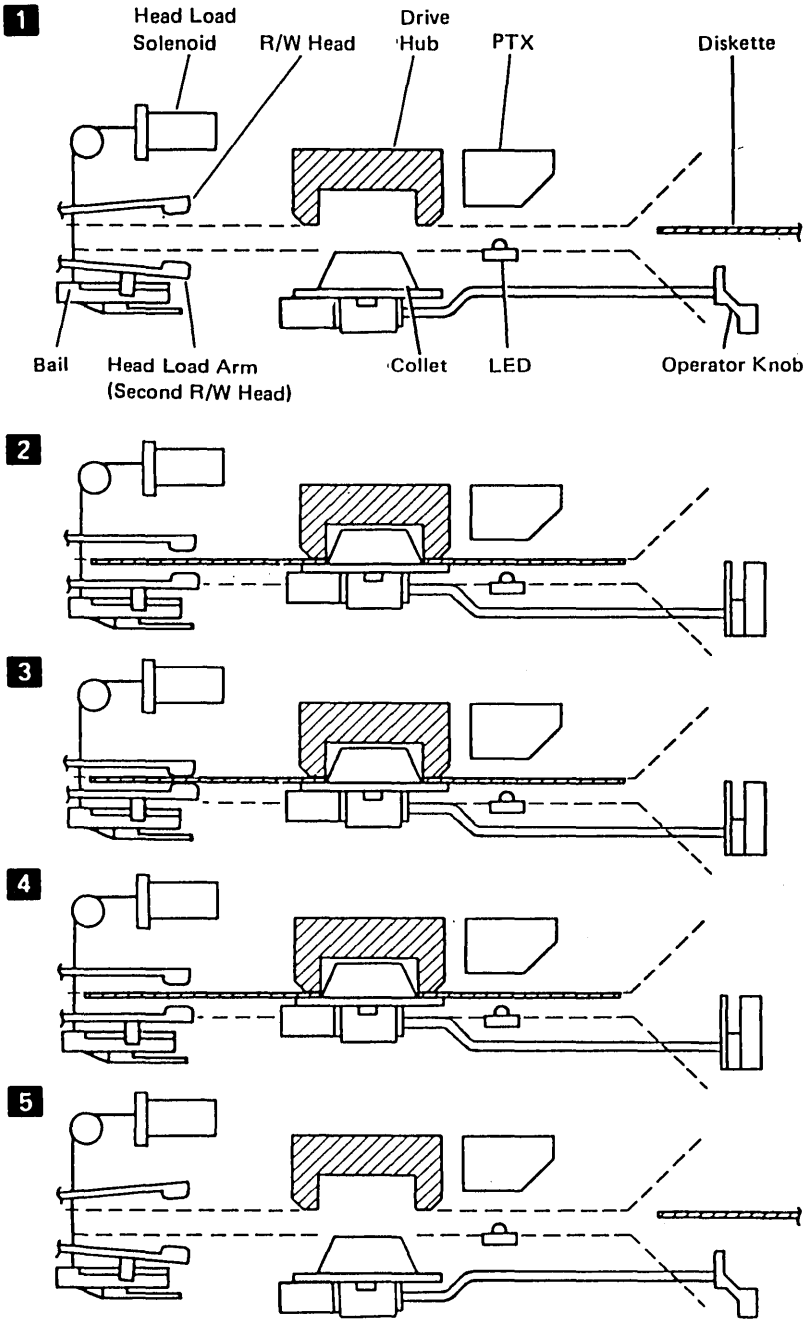

Figure F-12. Diskette Insertion and Head Load Operation

F.2.3 Typical Device Operation

Figure F-13 shows the sequence of diskette operation.

1. The host system starts the diskette drive motor.
2. The operator inserts a diskette and turns the operator knob to the closed position. With the operator knob in the closed position, the diskette starts turning, and the read/write heads move into position on the diskette surface (see F.2.2) for mechanical operation).
3. Index pulses are sensed every revolution (166.7 ms).

   The type of diskette inserted is identified on the diskette Sense line. An up level indicates a diskette 2 or 2D while a down level indicates a diskette 1.
4. The using system sequentially activates the two access lines to move the head/carriage assembly in (toward the hub) or out (away from the hub) to select the desired cylinder. Then the system sequentially activates the access line to turn the stepper motor a distance equal to one cylinder. The two access lines last used to move the head/carriage to the desired cylinder remain active (B). Data from the selected cylinder is valid after 40 ms (minimum time for the head and carriage assembly to stop).
5. A head load command can be given before or during a seek to activate the head load solenoid. Data is valid 80 ms after the heads are loaded. Address bytes of the first available ID (identifier) field are read, which verify that the heads are in the correct position.
6. Reading or writing can occur 40 ms after seeking to the last cylinder (A), or 80 ms after the heads are loaded.
7. The read/write head is unloaded after the read or write operation.

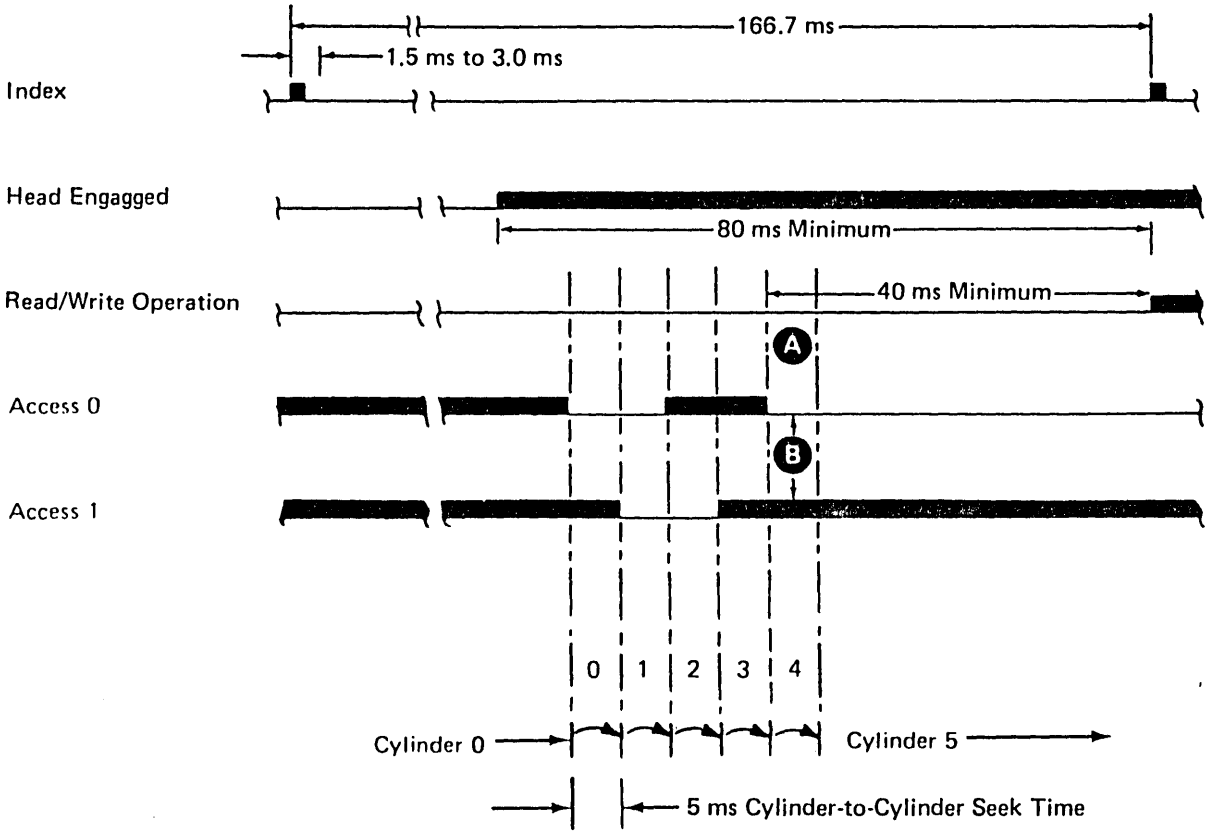

Note: Seeking and head loading are not to the index.

Figure F-13. Diskette Operation Sequence

F.2.4 Read/Write Principles

F.2.4.1 Write Data

For each change of the write data signal, the current switches in the read/write head. This process records the data on the diskette surface.

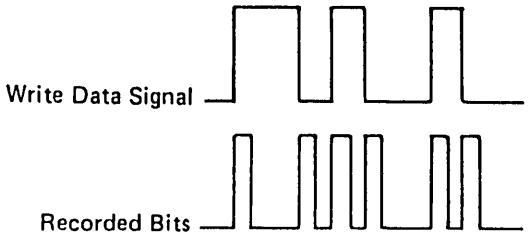

FM Encoding: Writes data bits 4 µsec apart. They are recorded on the diskette as follows:

Data Bit to Be Recorded	Recorded As: Clock Bit	Data Bit
1	1	1
0	1	0

Data bits 0101 appear as follows:

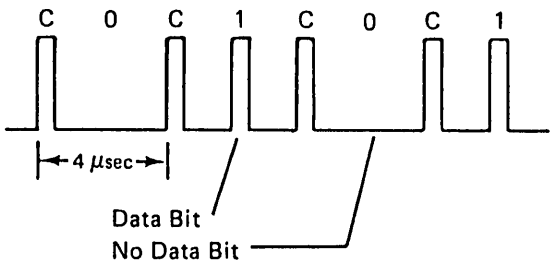

MFM Decoding: Remove the constant clock pulse. A clock bit is recorded only when a 0 (no-data bit) is followed by another 0. Therefore, the time between data bits is only 2 µsec. Either a data bit for a 1 or a no data bit for a 0 is recorded in this 2-µsec period. They are recorded on the diskette as follows:

Data Bit to Be Recorded	Recorded As: Clock Bit	Data Bit
1	0	1
0	(X)	0

Note: (X) is a 0 bit if the preceding bit is a 0 bit, or a 1 bit if the preceding bit is a 1 bit.

Data bits 10110011 appear as follows:

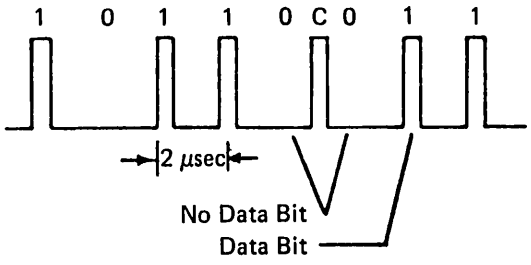

F.2.4.2 Write Operation

For a write operation (Figure F-14), the write-gate signal activates the write circuits and deactivates the read circuits (E).

The erase-gate signal activates the tunnel erase circuits during a write operation to erase the edge of the data track (F) just recorded. This erasing process prevents crosstalk between tracks during later read operations.

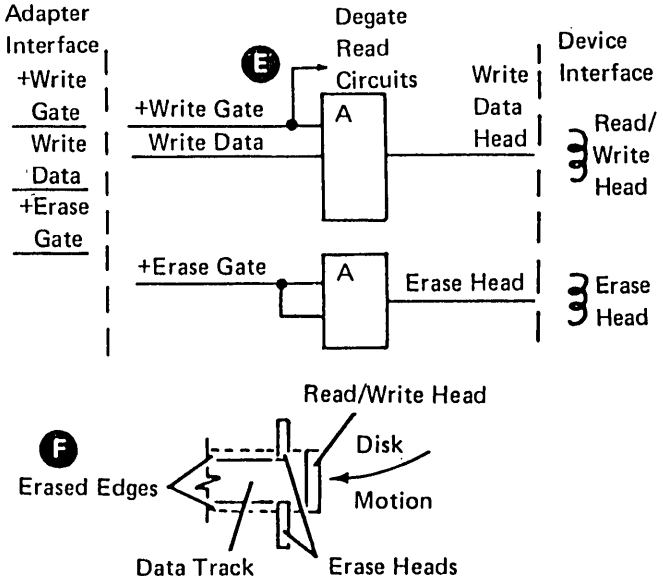

Figure F-14. Write Operation

Format Write Operation: Writes a full track exchanging all the identifier (ID) fields, data fields, and gaps. The index to the first ID field gap is 79 eight-bit bytes.

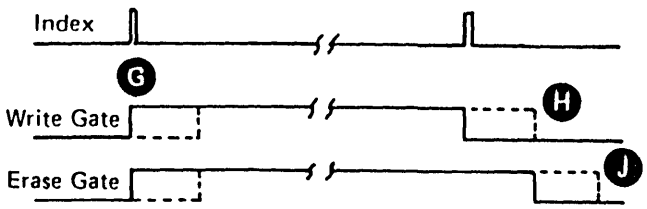

The write-gate signal is activated any time between the leading edge of the index pulse (G) and 100 bytes after the leading edge of the index pulse. The write-gate signal is deactivated approximately 102 bytes after the leading edge of the next index pulse (H).

The erase-gate signal is activated at the same time as the write-gate signal, but is deactivated 537 μsec after the write-gate signal is deactivated (J).

Record (Update) Write Operation: Performed on a data field and its VFO sync field only. ID fields and gaps are not written. See Figure F-15.

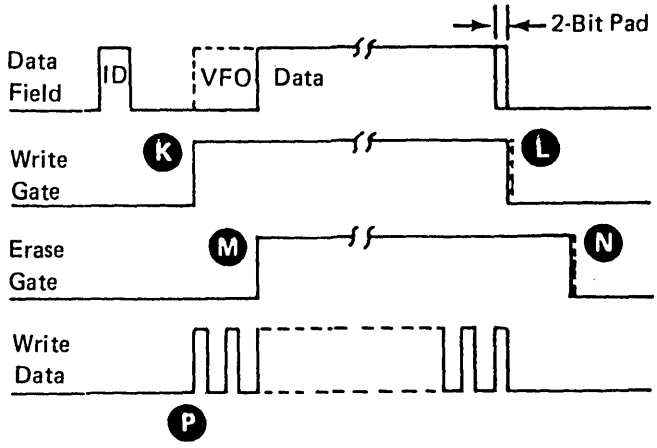

Figure F-15. Record Update -- Write Operation

The write gate line is activated 316 μsec after the last ID character is read (K). The line is deactivated 5 μsec after the last clock of the 2-bit pad is written (L).

The erase-gate line is activated (M) 221 μsec after the write-gate line and is deactivated (N) 537 μsec after the fall of the write-gate line.

The writing of the new VFO sync field starts when the write-gate line is activated (P).

F.2.4.3 Read Data

Read data is the FM or MFM encoded read head signal that can be observed at TPAMP1 or TPAMP2. See Figures F-16 through F-20.

Typical measurements for FM encoding are:

125 kHz: 120 to 300 mV (all 0's)
250 kHz: 100 to 250 mV (all 1's)

The voltage is higher at the outer tracks because of the higher track speeds and lower bit density.

An all 0's pattern has a higher voltage amplitude and is half the frequency of an all 1's pattern.

Typical MFM encoding measurements are:

125 kHz, 100 mV to 300 mV (alternating 0's and 1's, typical measurements)

250 kHz, 100 mV to 250 mV (all 0's or all 1's typical measurements)

For MFM, an alternating 0's and 1's pattern has a higher voltage amplitude than, and is half the frequency of, an all 0's or an all 1's pattern.

Read Data:FM Encoded

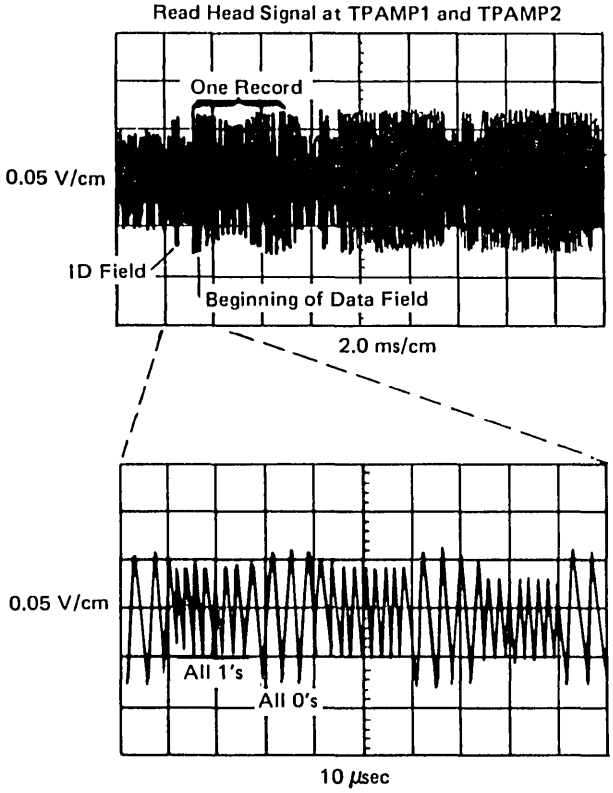

Scope Setup

Note: Use Tektronix 453, 454, or similar oscilloscope with x10 probes.

Channel A sweep mode	Normal
Channel A level	+
Channel A coupling	DC
Channel A slope	+
Channel A source	External
Trigger	Normal
Mode	Add
Channel 1 volts/ division	5 mV/cm
Channel 2 volts/division	5 mV/cm
Channel 1 input	AC
Channel 2 input	AC
Invert	Pull out
Times per division	2 ms/cm
Connect channel 1 to	TPAMP1
Connect channel 2 to	TPAMP2
Connect trigger to	+Index test pin

Observe: The amplitude of the read signal will be between 100 mV to 250 mV.

Read Data:MFM Encoded

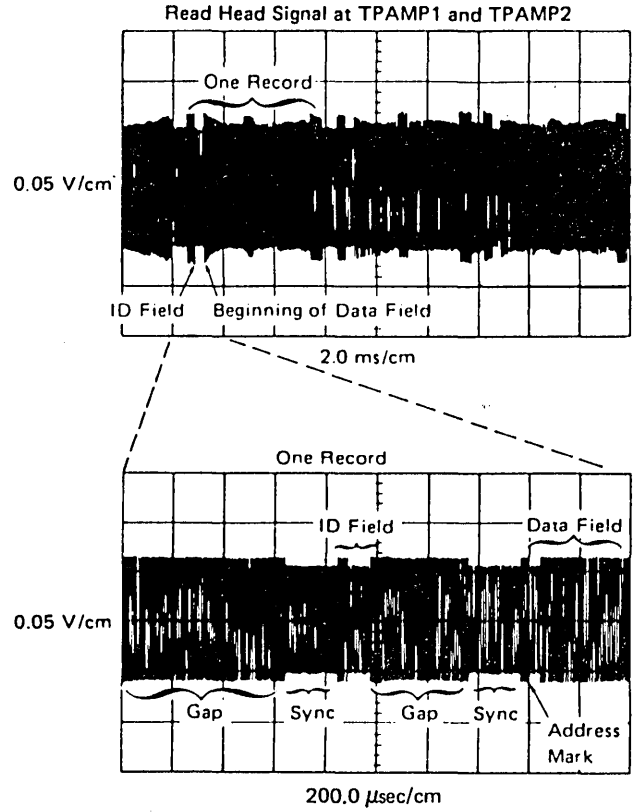

Scope Setup

Note: Use Tektronix 453, 454, or similar oscilloscope with x10 probes.

Channel A sweep mode	Normal
Channel A level	+
Channel A coupling	DC
Channel A slope	+
Channel A source	External
Trigger	Normal
Mode	Add
Channel 1 volts/ division	5 mV/cm
Channel 2 volts/division	5 mV/cm
Channel 1 input	AC
Channel 2 input	AC
Invert	Pull out
Times per division	2 ms/cm
Connect channel 1 to	TPAMP1
Connect channel 2 to	TPAMP2
Connect trigger to	+Index test pin

Observe: The amplitude of the read signal will be between 100 mV to 250 mV.

Figure F-16. Read Data Signals

F.2.4.4 File Data (Figure F-17)

The 'file data' signal is a series of clock and data pulses that represents the read data. These pulses can be observed at TPH01. They are from 150 ns to 500 ns long. The VFO circuits (supplied by the using system) separate the clock pulses from the data pulses.

FM File Data Signal

Example: 01010

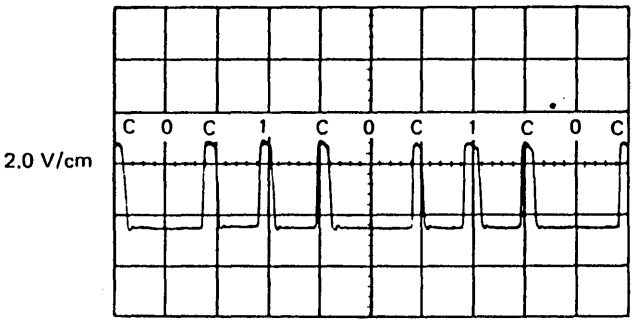

Scope Setup

Note: Use Tektronix 453, 454, or similar oscilloscope with x10 probes.

Channel A sweep mode	Normal
Channel A level	+
Channel A coupling	DC
Channel A slope	+
Channel A source	External
Trigger	Normal
Mode	Channel 1
Channel 1 volts/division	0.2 V/cm
Channel 1 input	DC
Times per division	2 μsec/cm
Connect channel 1 to	+File data
Connect trigger to	+Index test pin

Observe: Clock pulses every 4 μsec. Pulse duration should be between 100 and 500 ns. Pulse amplitude should be between 2.4 and 4.2 volts.

MFM File Data Signal

Bit Pattern: Hex E5E5

Example; 0101111001

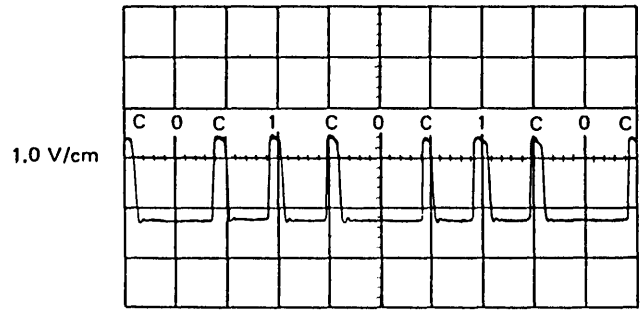

Scope Setup

Note: Use Tektronix 453, 454, or similar oscilloscope with x10 probes.

Channel A sweep mode	Normal
Channel A level	+
Channel A coupling	DC
Channel A slope	+
Channel A source	External
Trigger	Normal
Mode	Channel 1
Channel 1 volts/division	1.0V/cm
Channel 1 input	DC
Times per division	2 μsec/cm
Connect channel 1 to	+File data
Connect trigger to	+Index test pin

Observe: Clock or data pulses every 2 to 4 μsec. Pulse duration should be between 100 and 500 ns. Pulse amplitude should be between 2.4 and 4.2 volts.

Figure F-17. File Data Signals

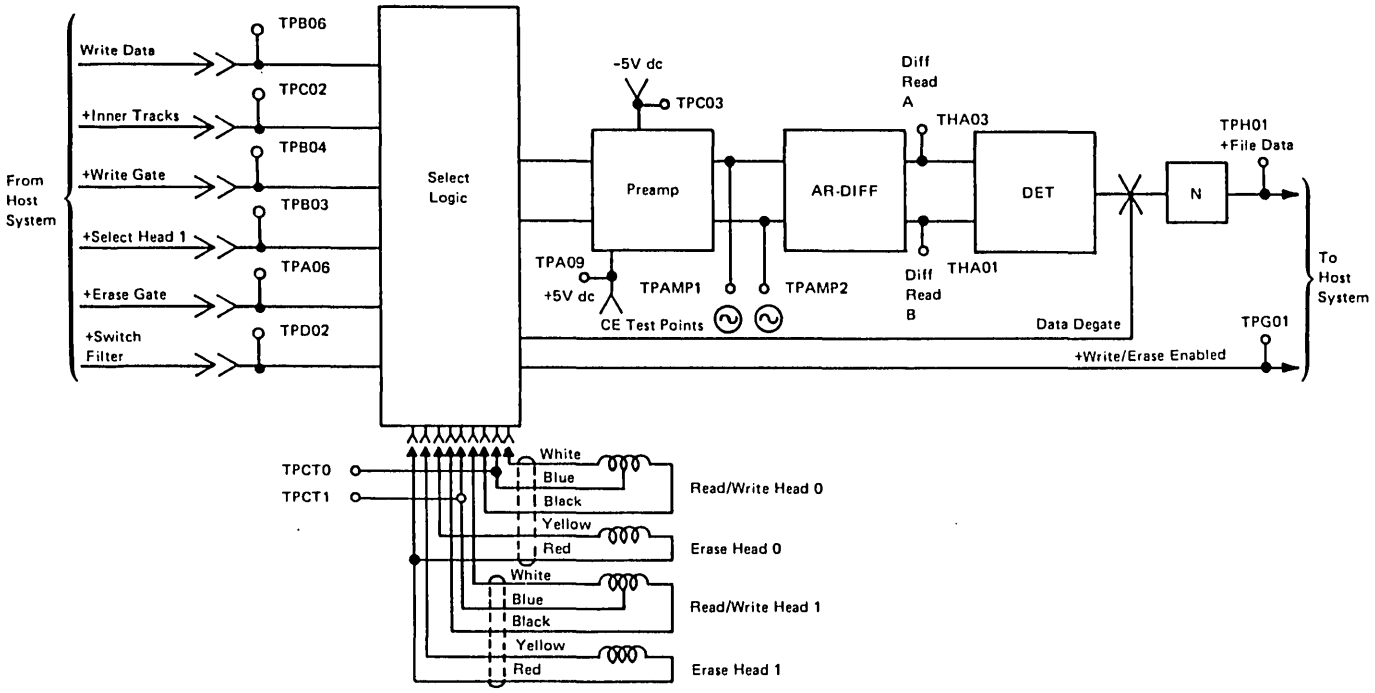

Figure F-18. 51TD Test Points

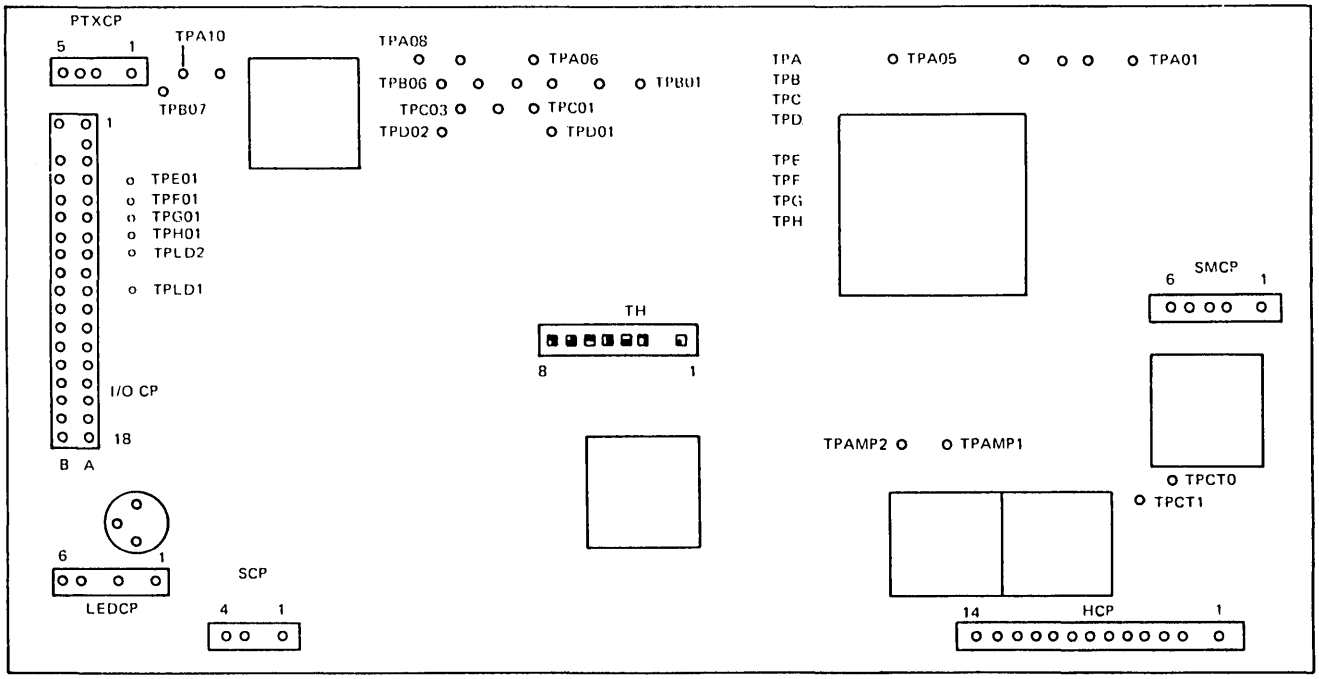

PTXCP – PTX Connector Pins
I/O CP – I/O Connector Pins
LEDCP – LED Connector Pins
SCP – Solenoid Connector Pins
HCP – Head Connector Pins
SMCP – Stepper Motor Connector Pins

Figure F-19. 51TD Control Card

Test Points	Line Names
TH01	Diff Read B
TH02	No Pin
TH03	Diff Read A
TH04	-High Gain
TH05	-Disable Stepper Motor
TH06	+14V
TH07	Access Clamp Voltage
TH08	Oscillator

Test Points	Line Names
TPA01	MC-3
TPA02	MC-1
TPA03	MC-2
TPA04	MC-0
TPA05	Ground
TPA06	+Erase Gate
TPA07	Ground
TPA08	-Head Load
TPA09	+5V dc
TPA10	D2 PTX
TPB01	+24V dc
TPB02	Ground
TPB03	+Select Head 1
TPB04	+Write Gate
TPB05	+Head Engage
TPB06	Write Data

Test Points	Line Names
TPB07	D1 PTX
TPC01	+Access 0
TPC02	+Inner Tracks
TPC03	-5V dc
TPD01	+Access 1
TPD02	+Switch Filter
TPE01	+Index
TPF01	+Diskette Sense
TPG01	+Write Erase Enabled
TPH01	+File Data
TPLD2	D2 LED Voltage
TPLD1	D1 LED Voltage
TPAMP2	Preamp TP2
TPAMP1	Preamp TP1
TPCT0	Center Tap Head 0
TPCT1	Center Tap Head 1

Figure F-20. 51TD Control Card Cable

F.3 Maintenance

F.3.1 Collet/Flat Spring Assembly

F.3.1.1 Collet/Flat Spring Removal (Figure F-21)

1. Power down.
2. Turn the operator knob (F) to the closed position.

Warning: Do not attempt to remove the collet/flat spring (E) before removing the bail (L). Too much pressure or binding can damage the spring.

3. Loosen the lever screw (K).
4. Push the bail (L) inward slightly and disconnect the bail actuator cable eyelet (N) from the lever (J).
5. Turn the operator knob (F) to the open position.
6. Loosen the bail mounting screw (M).
7. Observe the position of the bail return spring (R); then remove the bail pivot rod (P), the bail return spring (R), and the bail (L) by sliding the bail (L) out from under the head load arm (C).

Warning: Ensure that the heads do not hit each other when the bail (L) is removed from under the head load arm.

8. Remove the screw and nut (T) from the collet actuator rod (S).
9. Remove the operator knob (F).
10. Remove the collet actuator roll (H) and the pressure roll (G).
11. Turn the collet actuator rod (S) up and out of the way. Then remove the collet/flat spring assembly (E).

F.3.1.2 Collet/Flat Spring Replacement (Figure F-21)

Warning: Too much pressure or binding on the flat spring (E) will damage the spring.

1. Reinstall the collet/flat spring assembly (E).
2. Reinstall the collet pressure roll (G) and actuator roll (H).
3. Turn the collet actuator rod (S) down against the spring.
4. Reinstall the operator knob (F) in the open position.
5. Reinstall the screw and nut (T) that attach the operator knob to the collet actuator rod (S). Push the operator knob and the collet actuator rod (S), together until there is a maximum of 0.1-mm (0.004-inch) end play (W) between the operator knob (F) and the diskette guide (D). (See Part 2 of Figure F-21.) Tighten the screw.
6. Reinstall the bail return spring (R), the bail (L) and the bail pivot rod (P). Place the bail (L) on the collet actuator rod (S). Ensure that the spring (R) is in the correct position. Place the bail (L) under the head load arm. Place the bail pivot rod (P) in the groove, and tighten the bail mounting screw (M).

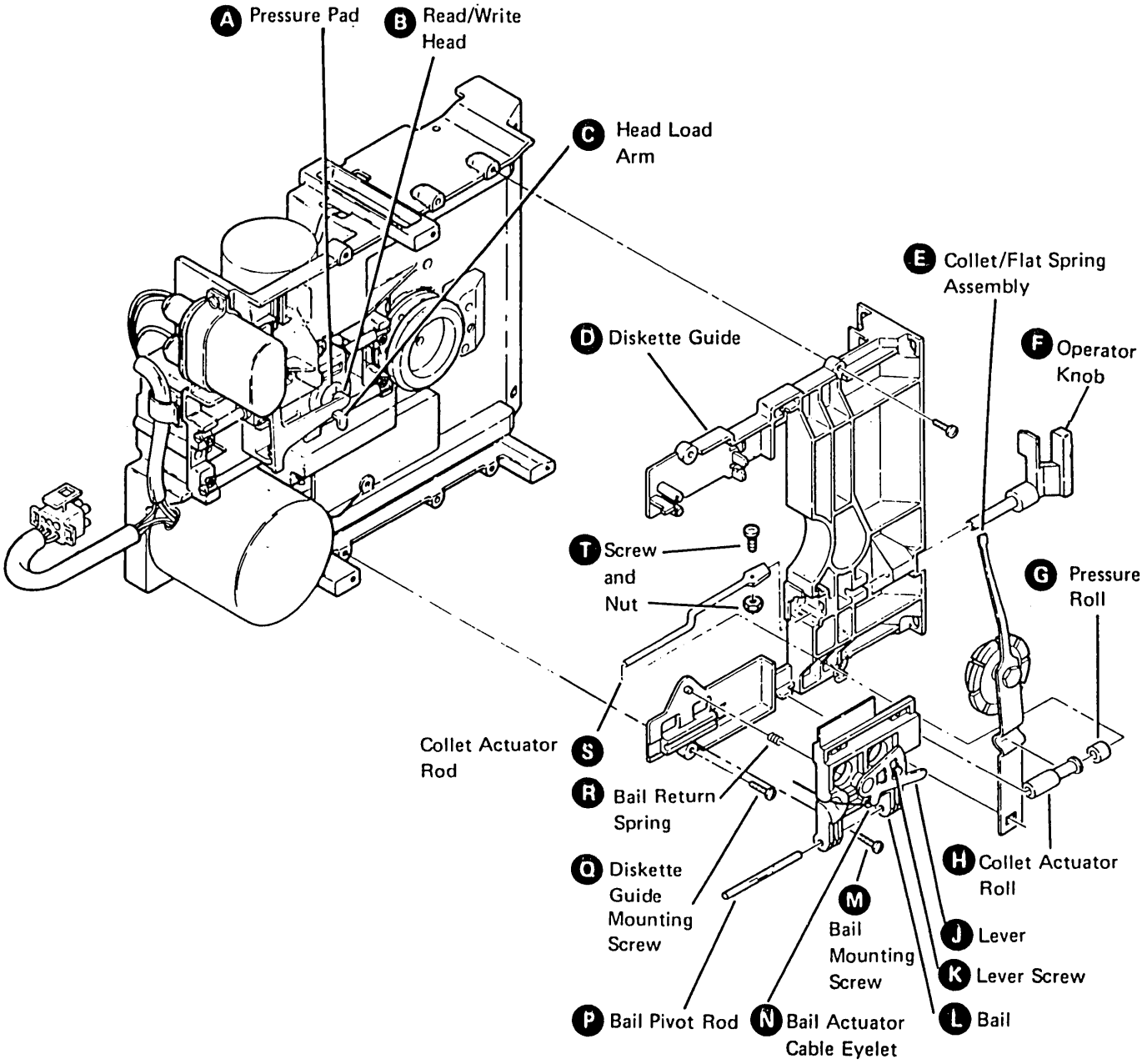

Figure F-21 (Part 1 of 2). Collet/Flat Spring Removal

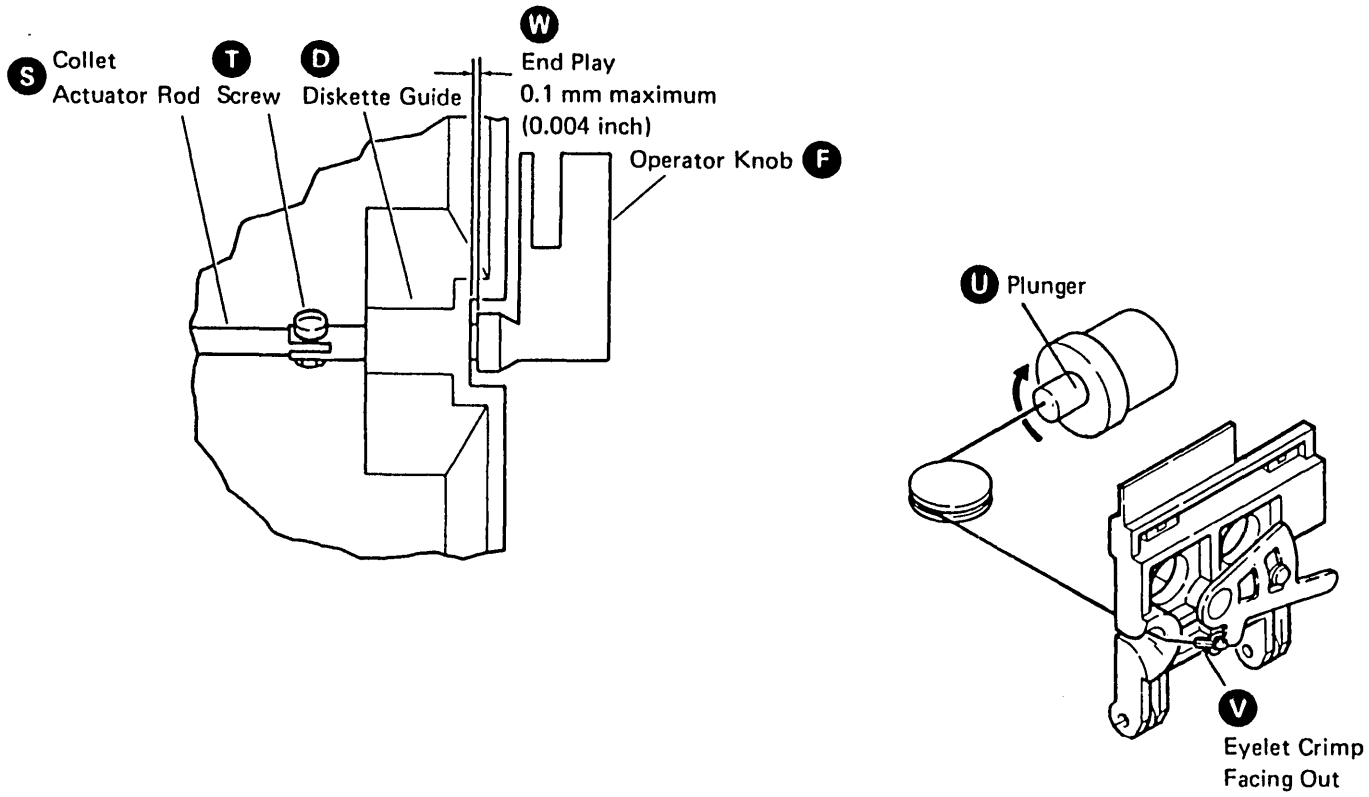

Figure F-21 (Part 2 of 2). Collet/Flat Spring Removal

7. Turn the operator knob (F) to the closed position.
8. Push the bail (L) inward slightly and connect the cable to the lever (J). Ensure that the eyelet crimp (V) is facing outward, that the cable remains on the pulley and that the cable is not twisted. (See Part 2 of Figure F-21.) Turn the solenoid plunger (U) if necessary.
9. Turn the operator knob (F) to the open position.
10. Remove the paper from between the heads.
11. Ensure that the diskette moves in and out of the drive smoothly without hitting the collet. If the diskette will not move in and out smoothly, the flat spring (E) has been damaged and a new flat spring should be installed.
12. Perform the Head Gap Adjustment (paragraph F.3.3.3).

F.3.2 Head/Carriage Assembly

Warning: The head/carriage assembly is adjusted and tested at the factory. Do not attempt to adjust or repair any part of this assembly.

Do not attempt to clean the head/carriage assembly. If the assembly is not clean, exchange it.

F.3.2.1 Head/Carriage Service Check (Figures F-22, F-23)

Warning: The head/carriage service check must be performed with the diskette drive installed (or with the diskette drive in the same position as when installed) or the adjustment might not be accurate.

1. Power down.

   DANGER
   Voltage is still present at the socket when the power cable is disconnected.

2. Disconnect the ac drive motor power cable (J).
3. Remove the head cable guide (A).
4. Turn the stepper motor pulley by hand to track 40, and insert a timing pin (C). (Ensure that the pin goes into the casting.)
5. Power up.
6. To disable the stepper motor, install a jumper (L) from TPB02 (ground) to TH05 (-'disable stepper motor').
7. To locate the stepper motor at track 40, install a jumper (M) between TPA07 (ground) and TPA04 (MC-0).
8. Put the timing pin (C) through the stepper motor pulley into the timing hole in the casting. Does the timing pin pass freely through the hole?

   Y
   - Remove the timing pin (C).
   - Remove the jumpers (L) and (M).
   - Power down.
   - Go to the Head/Carriage Adjustment (paragraph F.3.2.2), step 3.

   N

9. Remove the timing pin (C).
10. To remove the stepper motor to track 39, remove the jumper connected to TPA04 and install the jumper end on TPA01 (MC-3).
11. Verify that this is track 39 by visually checking for no gap (D) between the timing pointer (E) and the timing block (G).
12. To move the stepper motor from track 39 back to track 40, remove the jumper connected to TPA01 and install the jumper end on TPA04 (MC-0).
13. Verify that this is track 40 by visually checking that the timing hole in the pulley lines up with the timing hole in the casting. (Use the dental mirror to verify; do not use a timing pin.)
14. Insert the thickness gauges from the end of the timing pointer (E) and timing block (G) to verify the indicated gap (F):
    - 0.483 mm (0.019 inch). Go.
    - 0.533 mm (0.021 inch). No go.

    Note: Because of the torque characteristics of the stepper motor, this step can be performed only once. If it is necessary to perform this step again, go back to step 10 of this service check.
15. If the adjustment is not correct, go to step 12 of paragraph F.3.2.2.
16. Remove the jumpers (L) and (M).
17. Reinstall the head cable guide (A). (Ensure that the read/write head can move freely.)
18. Was the head/carriage assembly exchanged?

    Y
    - Power down.
    - Reconnect the ac drive motor power cable.
    - Power up.
    - End of procedure.

    N

19. Go to the Head Gap Service Check (paragraph F.3.3.2).

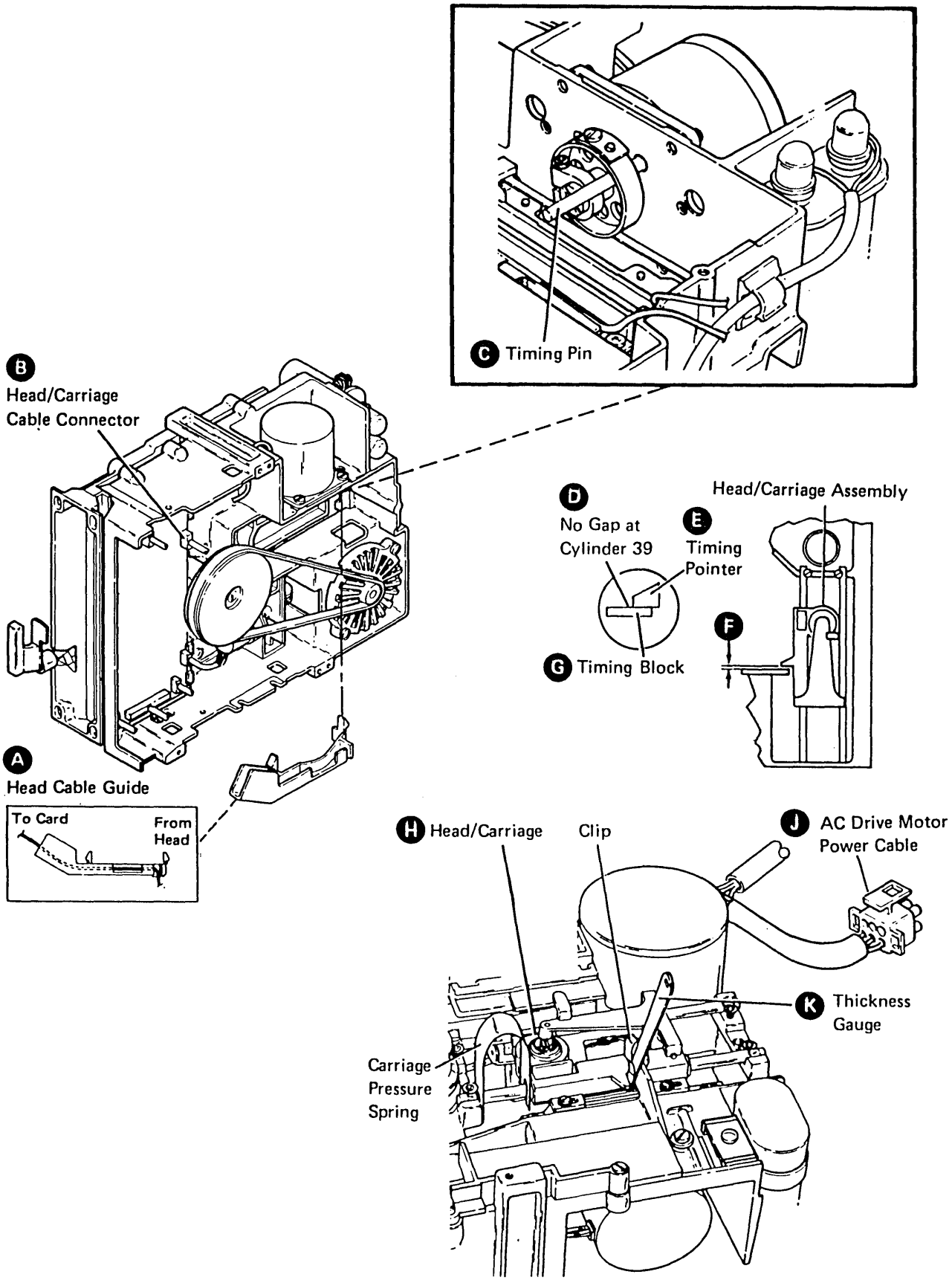

Figure F-22. Head/Carriage Service Check

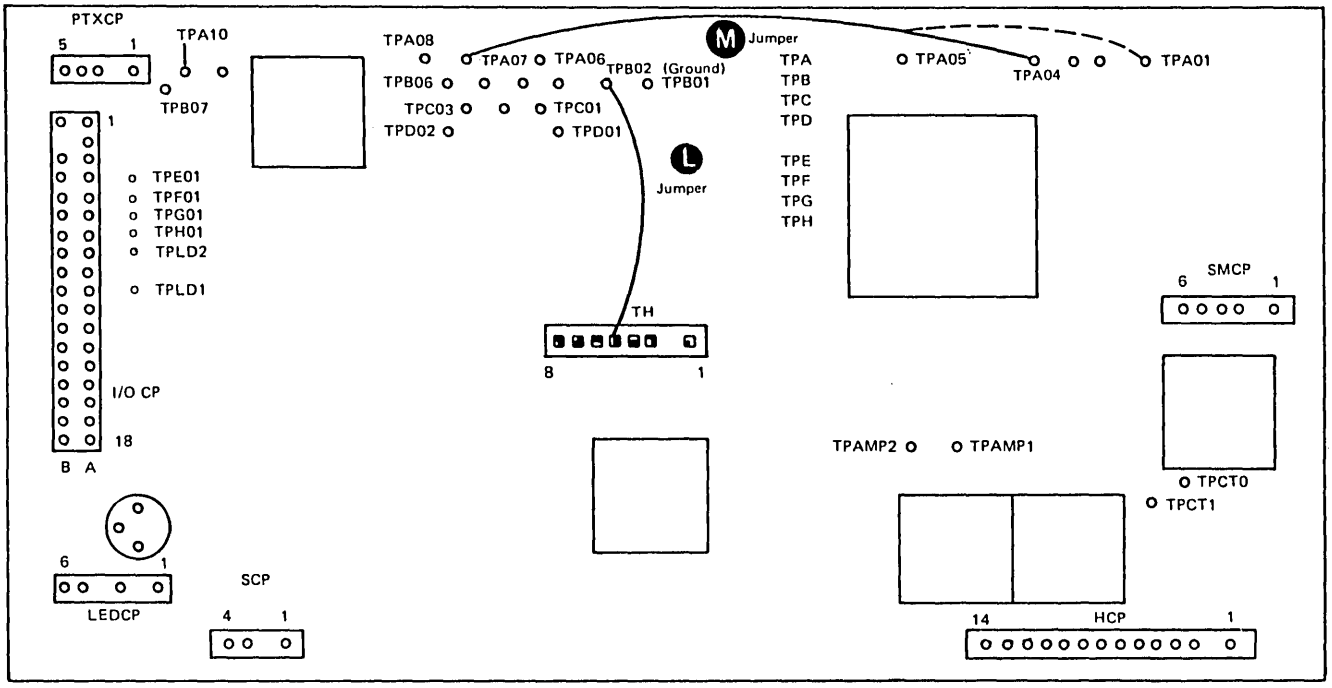

Figure F-23. Control Card

F.3.2.2 Head/Carriage Adjustment (Figure F-24)

Warning: The head/carriage assembly adjustment must be performed with the diskette installed (or in the same position as when installed), or the adjustment might not be accurate.

1. Power down.
2. Remove the cable guide (A).
3. Measure and record the gap (K) between the stepper motor pulley (L) and the casting.

   Gap is:_____.
4. Loosen the clamp screw (H) so the stepper motor drive shaft (N) can turn inside the pulley (L).
5. Turn the stepper pulley (L) by hand to track 40, and insert the timing pin (J). (Ensure that the pin goes into the casting.)

DANGER
Voltage is still present at the socket when the power cable is disconnected.

6. Disconnect the ac drive motor power cable (F).
7. Power up.
8. To disable the stepper motor, install a jumper (P) from TPA05 (ground) to TH05 (–'disable stepper motor).
9. To locate the stepper motor at track 40, connect a jumper from TPA07 (ground) to TPA04 (MC-0).

Warning: When the stepper motor pulley (L) is tightened by the clamp screw (H) ensure that the pin located on the back of the stepper motor pulley remains within the cutout slot on the casting.

10. Make the gap (K) the same size as the gap recorded in step 3, and tighten the clamp screw (H). (Ensure that the timing pin passes freely through the stepper motor pulley into the hole in the casting.) The clamp (M) should be placed even with the end of the stepper motor drive shaft (N).
11. Remove the timing pin (J).
12. Loosen the two bracket-to-carriage clamping screws (G).
13. Remove the jumper end from TPA04, and install the jumper end on TPH01 (MC-3).
14. Remove the jumper end from TPA01, and connect the jumper end on TPA04 (MC-0).
15. Verify that this is track 40 by visually checking that the timing hole in the pulley lines up with the timing hole in the casting. (Use the dental mirror to check; do not use a timing pin.)
16. Insert a 0.508 mm (0.020 inch) thickness gauge (E) between the timing pointer on the carriage and the track 40 adjustment surface on the casting. Use the clip (PN 4240632) (D) to attach the thickness gauge to the casting. The clip is attached to the diskette guide (see Figure F-4).

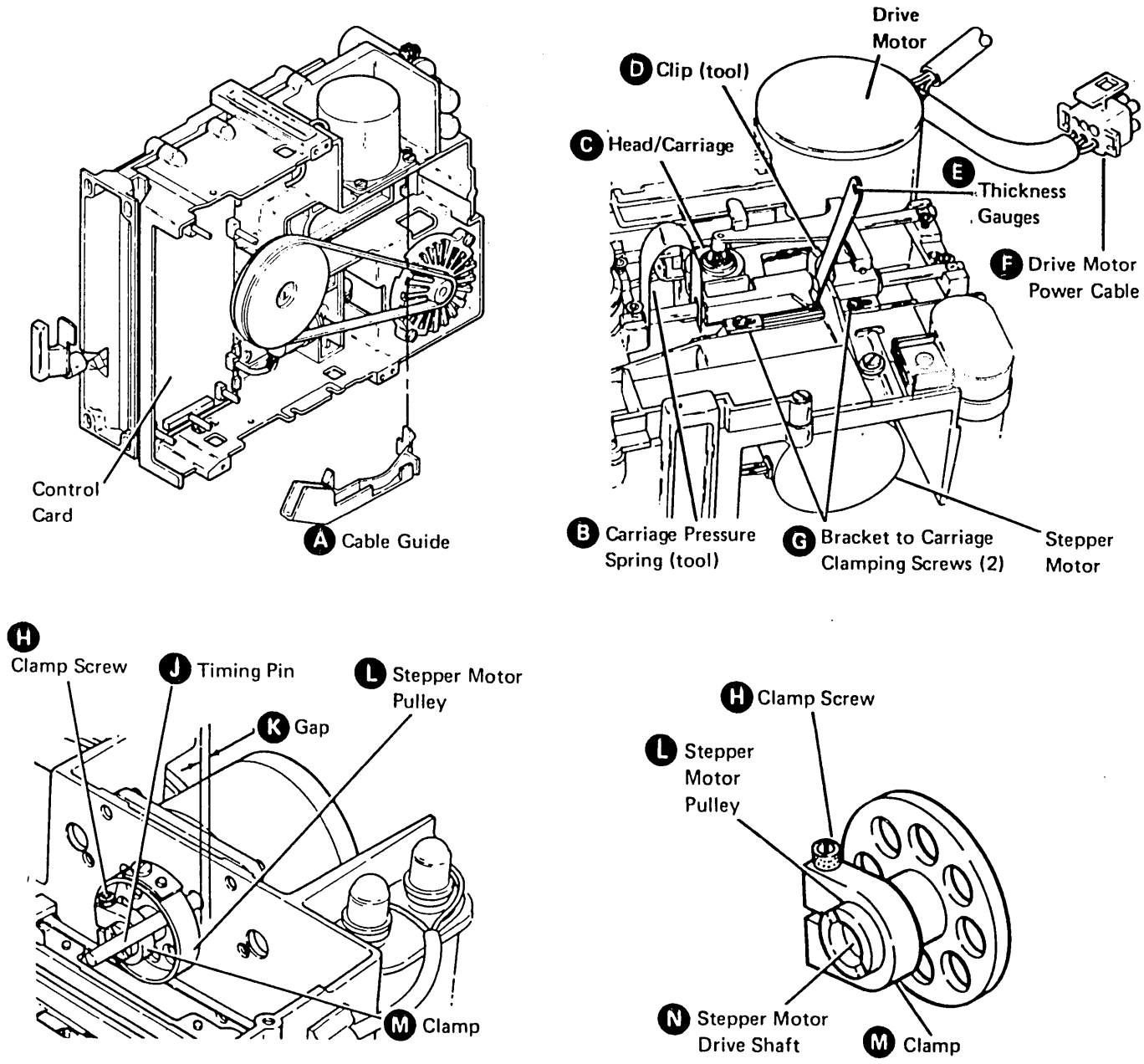

Figure F-24 (Part 1 of 2). Head/Carriage Adjustment

17. Slide the head/carriage (C) against the thickness gauge so it just touches but is not forced against the thickness gauge. Install the carriage pressure spring (PN 4240631) (B) between the casting and the carriage to hold the head/carriage assembly against the thickness gauge. The pressure spring is attached to the diskette guide (see Figure F-4).
18. Tighten the two screws (G) that fasten the bracket to the carriage.
19. Remove the clip (D) and the carriage pressure spring (B).
20. Go to step 10 of paragraph F.3.2.2.

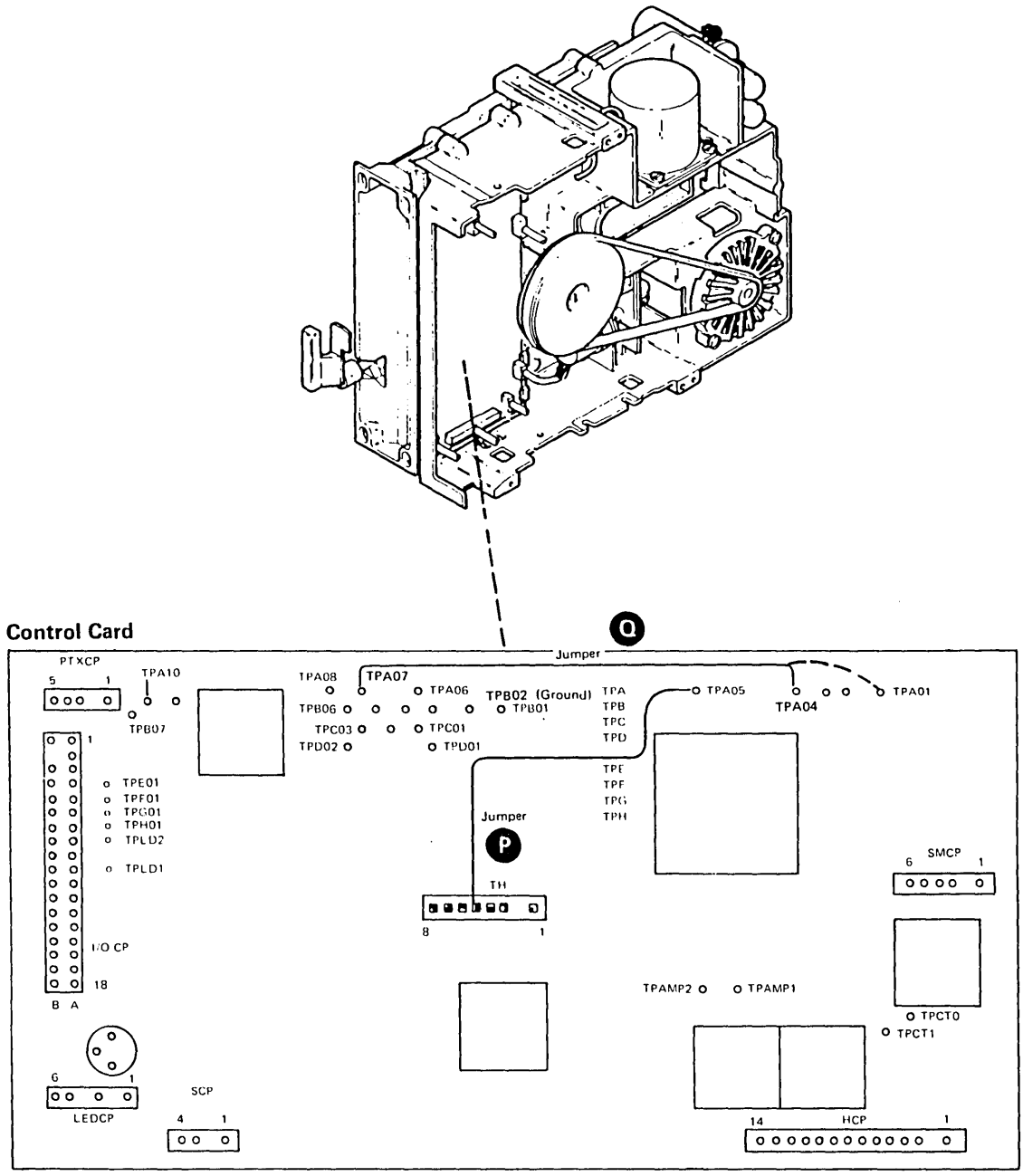

Figure F-24 (Part 2 of 2). Head/Carriage Adjustment

F.3.2.3 Head/Carriage Removal (Figure F-25)

1. Power down.
2. Carefully remove the head/carriage cable connector (A) from the control card. (Note the cable path for easier replacement.)
3. Remove the cable guide (B).

Warning: Band (C) must not be bent or damaged in any way.

4. Remove the band (C) by removing the three screws (E) and (M) that attach the band to the stepper pulley (L) and the carriage bracket (D). (Note the position of the band and clamps; they must be in the same position for replacement.)
5. Remove the carriage bracket (D) from the carriage. Place a clean piece of paper between the heads.
6. Remove the two screws (J) and remove the guide rod (F). Do not allow the heads to touch each other.
7. Carefully lift and turn the head/carriage assembly (H) to remove it from the guide rod (G).

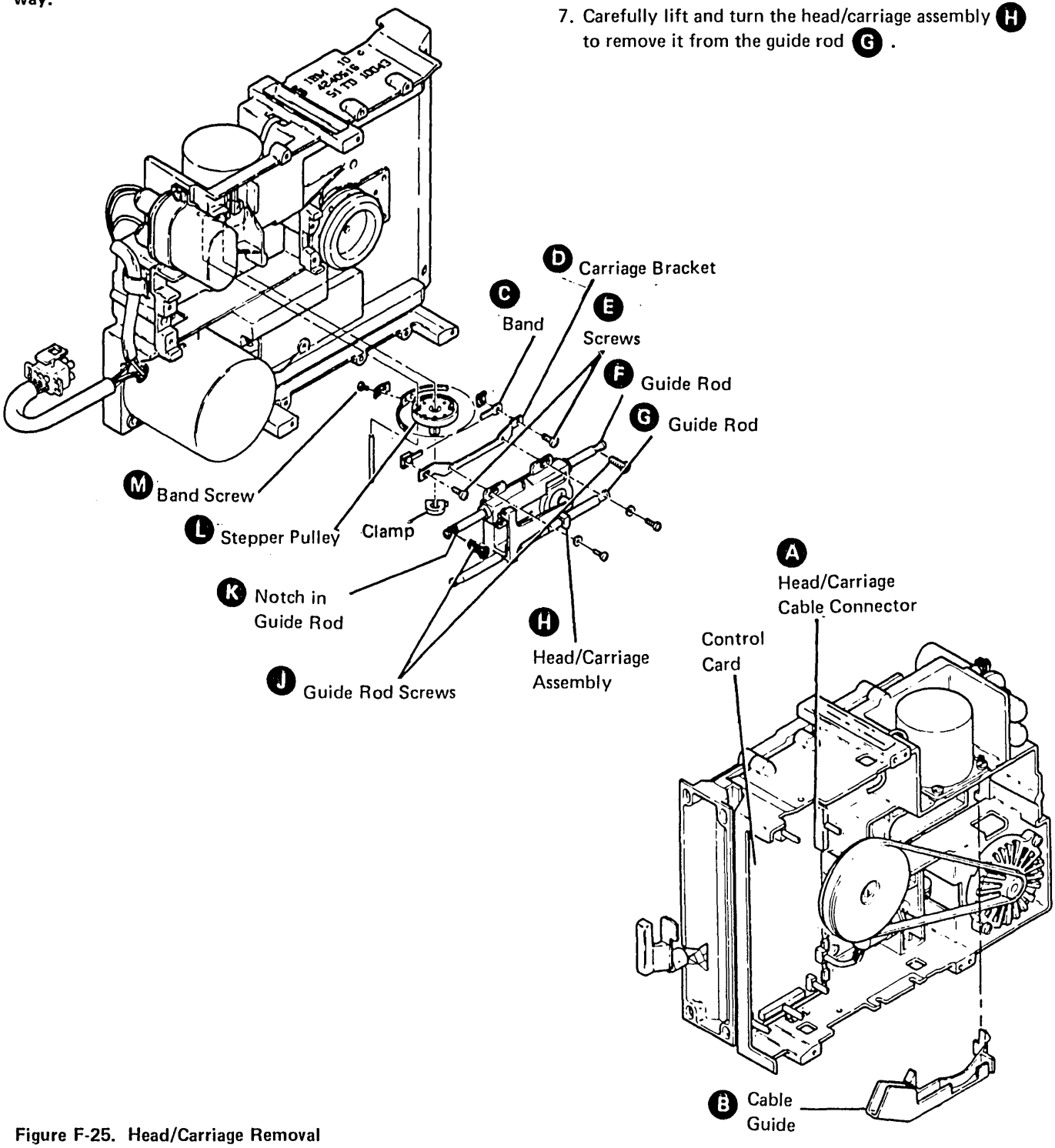

Figure F-25. Head/Carriage Removal

F.3.2.4 Head/Carriage Replacement (Figure F-26)

Warning: When you install the head/carriage assembly (S) ensure that a strip of clean paper is between the diskette drive heads to protect them during installation; also, ensure that the bail (E) is under the headload arm (D). Ensure that the bail return spring (G) is correctly installed. Ensure that the band (L) is not damaged in any way.

1. Carefully install the head/carriage assembly (S) on the guide rod (Q). Then place the head/carriage assembly at track 00.
2. Reinstall the guide rod (P) and tighten the two screws (R). (Ensure that the guide rod notch (U) is aligned with the screw (T).)
3. Place the head/carriage assembly at track 40.
4. Reinstall the carriage bracket (M) on the carriage with the screws and washers (R) installed in the center of the hole.
5. Reconnect the band (L) as follows: Install the adapter welded to band (V) to the slotted end (B) of the carriage bracket (M). Leave the screw loose. Install band (L) to the stepper motor pulley (W) with clamp (J). Install the end of band (L) to the carriage bracket with clamp (K). Ensure that the band is parallel to the carriage bracket (M) and the edge of the pulley (H) during installation.
6. Block the head/carriage about 25 mm (1 inch) from the casting (F).
7. Pull on the adapter welded to band (V) with 2.5 ± 0.25 pounds force, and tighten the band clamping screw (C). Ensure that the band is parallel to the pulley edge (H). Remove the paper from between the heads.
8. Move the carriage to track 00 and then to track 76. Ensure that the band track is straight and that the drive band is parallel to the pulley edge (H).
9. Carefully connect the head/carriage cable to the control card connector (AA).
10. Turn the stepper motor pulley (W) by hand to track 40, and check with the timing pin (X). Ensure that the pin goes into the casting.

DANGER
Voltage is still present at the socket when the power cable is disconnected.

11. Disconnect the ac drive motor power cable (A).
12. Power up.
13. To disable the stepper motor, install a jumper (Y) from TPB02 (ground) to TH05 (-'disable stepper motor').
14. Install a jumper (Z) from TPA07 (ground) to TPA04 (MC-0).
15. Put the timing pin through the stepper motor pulley (W) into the timing hole in the casting. Does the timing pin pass through the timing hole freely?

    Y
    - Remove the timing pin (X).
    - Remove the jumpers (Y) and (Z).
    - Power down.
    - Go to step 3 of paragraph F.3.2.2.

    N

    Remove the timing pin (X).

16. Go to step 12 of paragraph F.3.2.2.

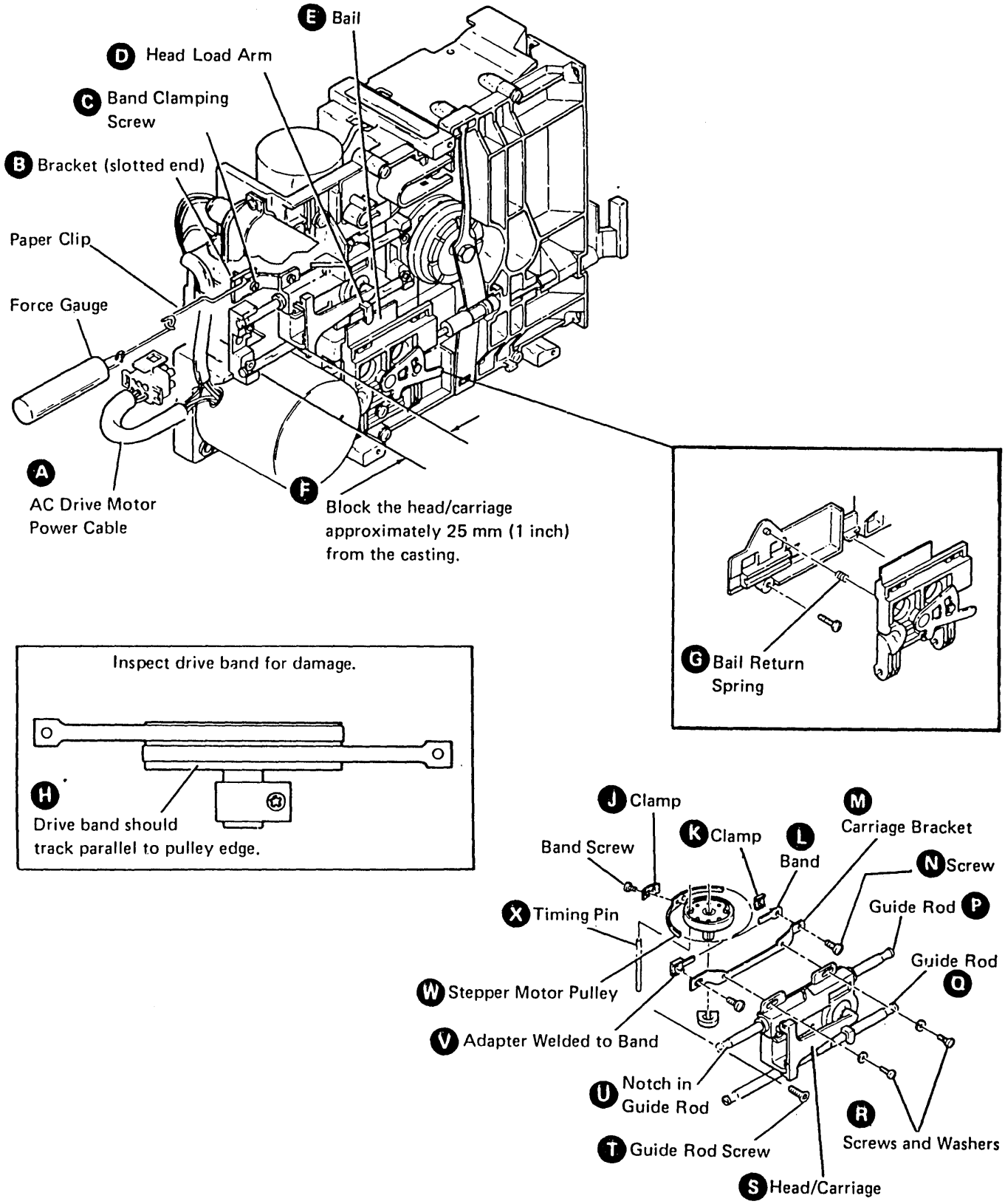

Figure F-26 (Part 1 of 2). Head/Carriage Replacement

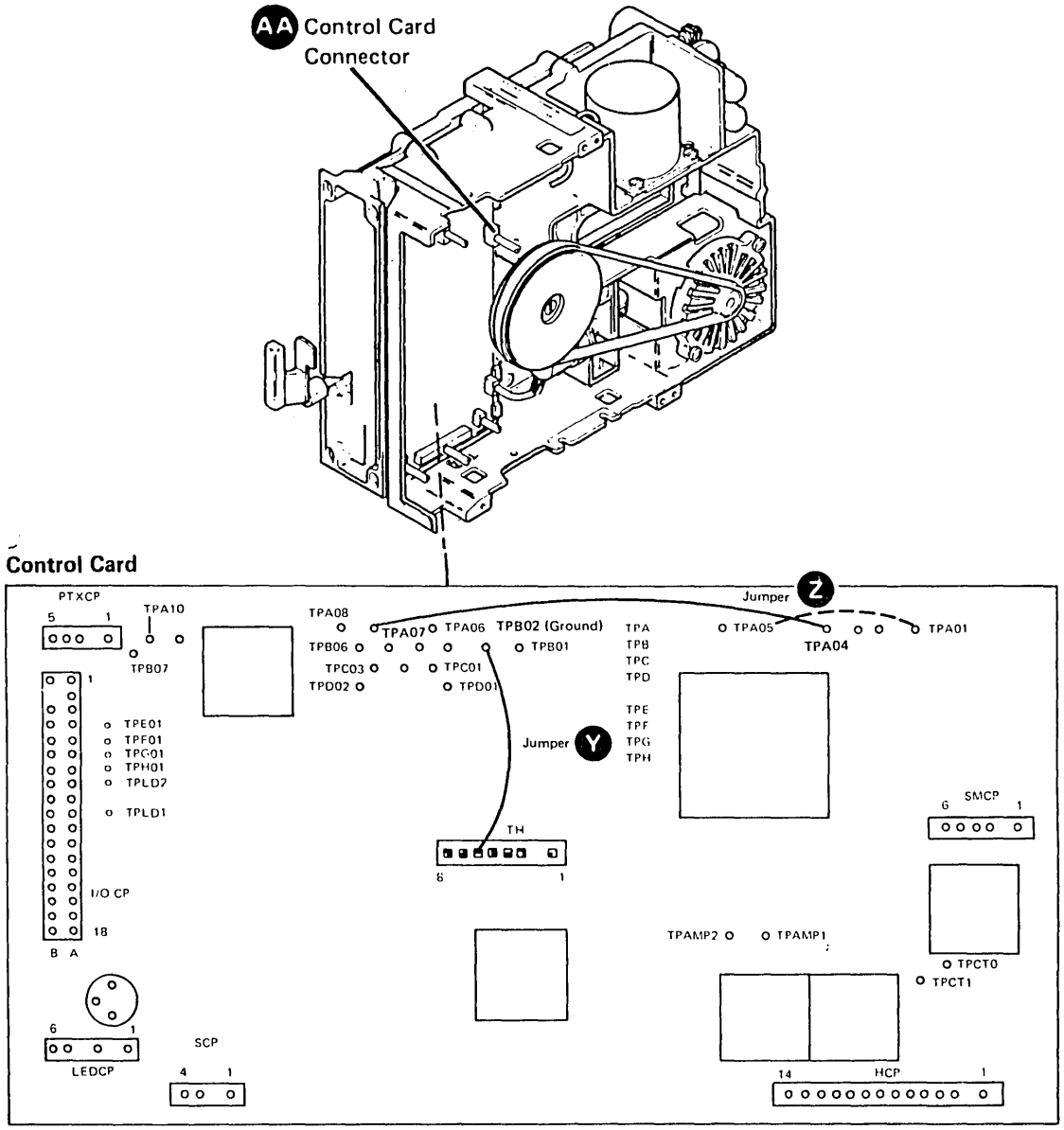

Figure F-26 (Part 2 of 2). Head/Carriage Replacement

F.3.3 Head Load Solenoid and Bail

F.3.3.1 Solenoid and Bail Service Check (Figure F-27)

1. Power down.

> **DANGER**
> **Voltage is still present at the socket when the power cable is disconnected.**

2. Disconnect the ac drive motor power cable G.
3. Insert a diskette, and turn the operator knob B, to the closed position.
4. Power up.
5. To activate the head load solenoid, install a jumper E from TPA07 (ground) to the head load TPA08 (-'head load').
6. To deactivate the stepper motor, install a jumper F from TPB02 (ground) to TH05 (-'disable stepper motor').
7. Verify a 0.3 to 0.7 mm (0.012 to 0.028 inch) gap D between the bail and the head load arm at each end of the head movement.
8. Is the gap OK? If not, go to Bail Adjustment (paragraph F.3.3.4, step 5).
9. Remove the jumpers E and F.
10. Turn the operator knob B to the open position, and remove the diskette.
11. Turn the operator knob B to the closed position.
12. Power down.
13. Reconnect the ac drive motor power cable G.
14. Power up.

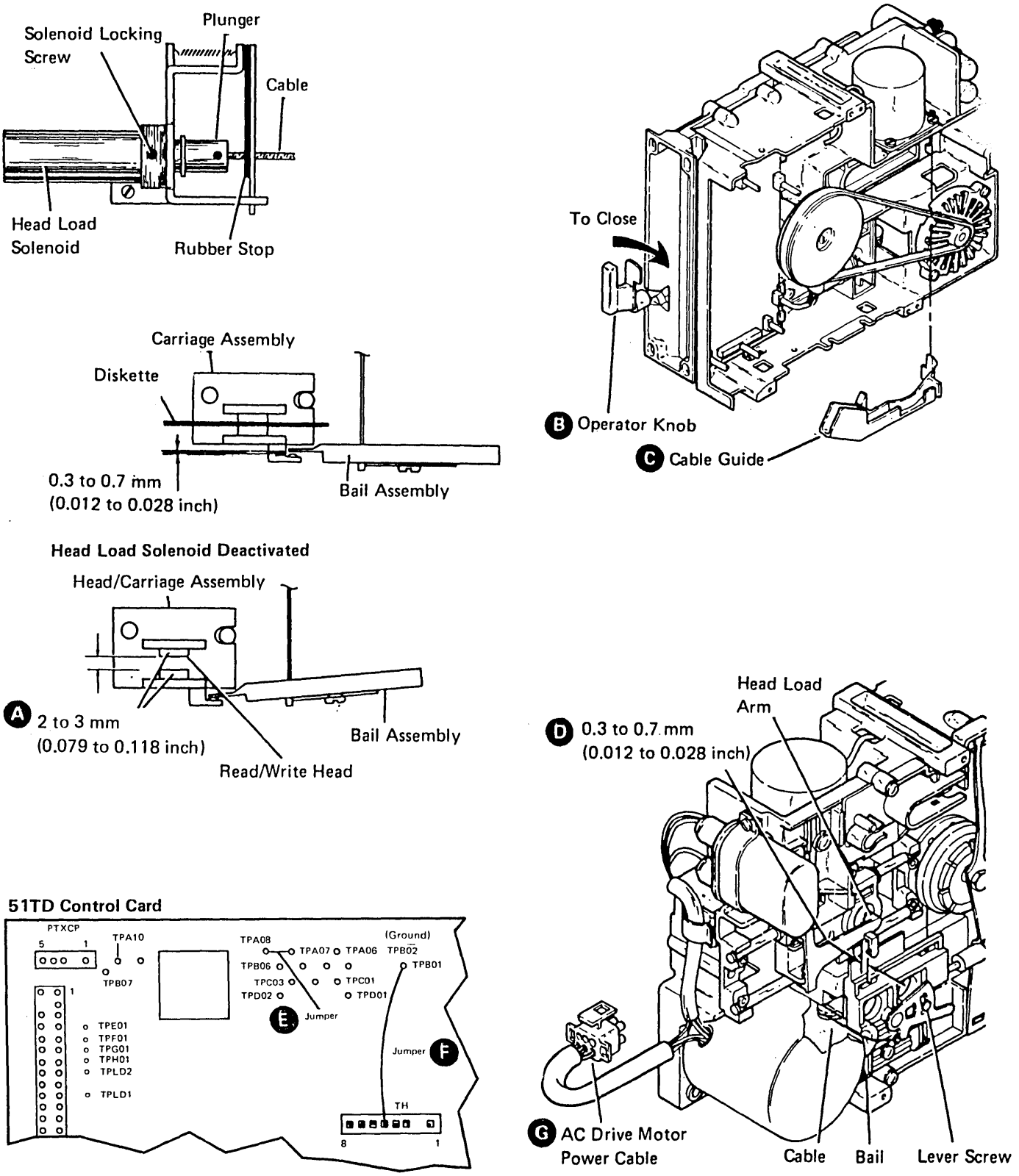

Figure F-27. Solenoid and Bail Service Check

F.3.3.2 Head Gap Service Check (Figure F-28)

1. Power down.
2. Turn the operator knob (B) to the closed position.
3. Visually check for a gap of 2 to 3 mm (0.079 to 0.118 inch) between the bail assembly and the head load arm.
4. Is the gap OK? If not, go to step 3 of paragraph F.3.3.3.
5. Turn the operator knob (B) to the open position.
6. Power up.
7. If the head/carriage assembly was exchanged, go to the Solenoid and Bail Service Check (paragraph F.3.3.1).

F.3.3.3 Head Gap Adjustment (Figure F-28)

1. Power down.
2. Turn the operator knob to the closed position.
3. Tighten the lever screw (K) just enough so that the lever (J) can still be adjusted.
4. While looking into the diskette opening, move the lever until the two heads just touch.
5. Note the lever marks (H) on the lever relative to the bail alignment edge (G).
6. Turn the lever one space clockwise.
7. Tighten screw (K).
8. The gap (B) between the head surface should be 2 to 3 mm (0.079 to 0.118 inch). This gap cannot be easily measured and should be checked visually only.
9. Is the gap OK?

Y ↓ — Go to Solenoid and Bail Service Check (paragraph F.3.3.1).

N — Go back to step 3.

F.3.3.4 Bail Adjustment (Figure F-28)

1. Power down.

DANGER
Voltage is still present at the socket when the power cable is disconnected.

2. Disconnect the ac drive motor power cable (L).
3. Power up.
4. Insert a diskette, and turn the operator knob to the closed position.
5. To activate the head load solenoid, install a jumper (C) from TPA07 (ground) to the head load TPA08 (-'head load').
6. To deactivate the stepper motor, install a jumper (D) from TPB02 (ground) to TH05 (-'disable stepper motor').

CAUTION
The solenoid case becomes hot after continuous use.

7. Loosen the solenoid locking screw (A).

Warning: Do not let the solenoid plunger and cable turn while you make this adjustment.

8. Turn the solenoid in the mounting bracket to obtain a 0.3 to 0.7 mm (0.012 to 0.028 inch) gap (E) between the head load arm and the bail.
9. Tighten screw (A).
10. Is the gap OK at each end of the head movement (step 8)?

Y ↓

N — Go back to step 7.

11. Remove the jumpers (C) and (D).
12. Turn the operator knob to the open position and remove the diskette.
13. Power down.
14. Reconnect the ac drive motor power cable (L).
15. Power up.

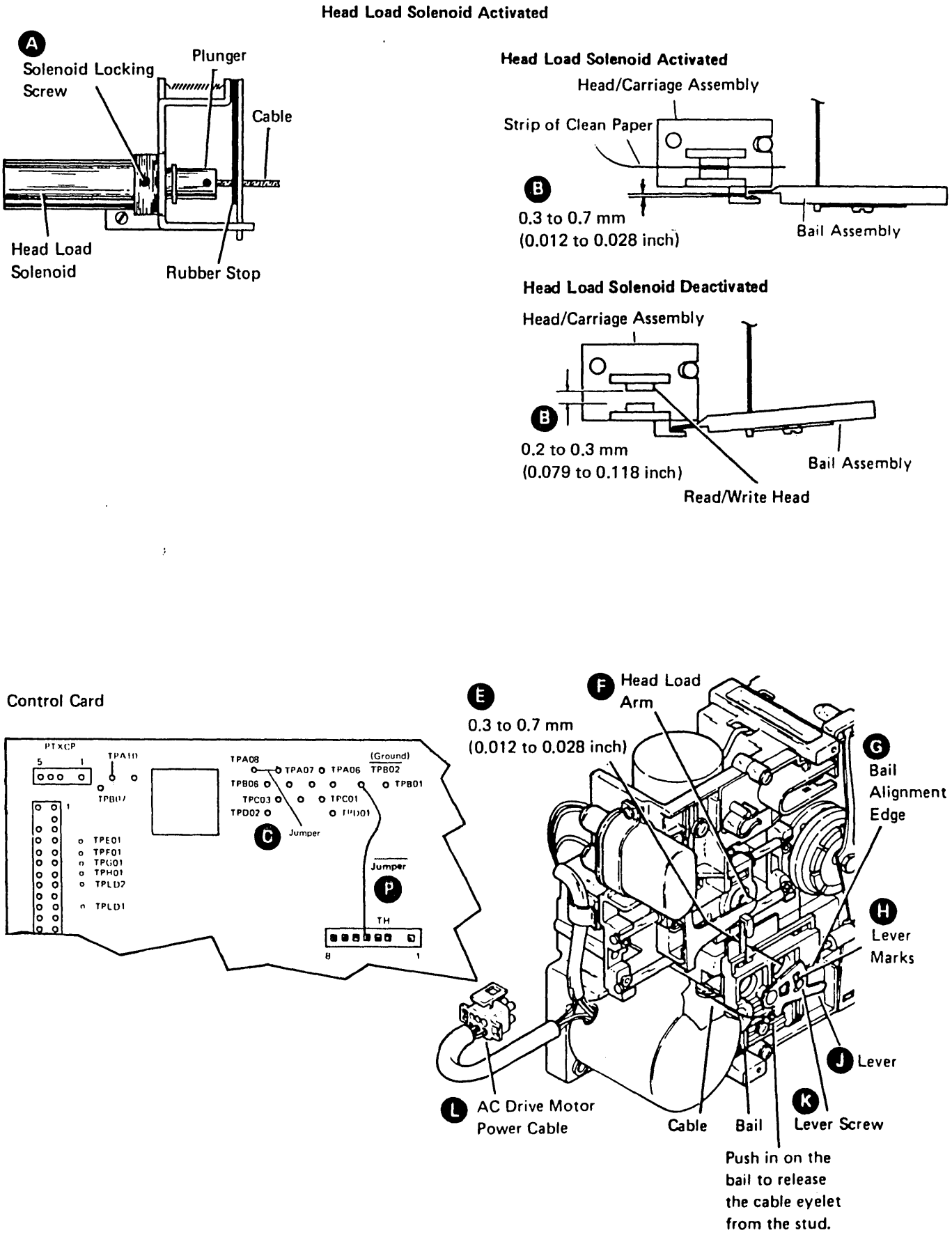

Figure F-28. Head Gap Adjustment

F.3.3.5 Bail Removal (Figure F-29)

1. Power down.

DANGER
Voltage is still present at the socket when the power cable is disconnected.

2. Disconnect the ac drive motor power cable (A).
3. Insert a strip of clean paper between the heads to prevent them from touching.
4. Turn the operator knob to the closed position.
5. Loosen the lever screw (C).
6. Push the bail (J) inward slightly, and disconnect the bail cable eyelet (G) from the lever (D).
7. Turn the operator knob to the open position.
8. Loosen the bail mounting screw (E).

Warning: Ensure that the heads do not touch each other when the bail is removed from under the head load arm.

9. Observe the position of the bail return spring (K). Now remove the pivot rod (H), the bail return spring (K) and the bail (J) by lifting the bail out from under the head load arm (B).

F.3.3.6 Bail Replacement (Figure F-29)

1. Reinstall the bail return spring (K), the bail (J), and the pivot rod (H). Place the bail (J) on the collet actuator rod (L). Ensure that the bail return spring (K) is in the correct position. Place the bail (J) under the head load arm (B), place the bail pivot rod (H) in the groove, and tighten the screw (E).
2. Turn the operator knob to the closed position.
3. Push the bail (J) inward slightly, and connect the cable eyelet (G) to the bail lever with the crimp (N) facing outward. (Ensure that the cable remains on the pulley and is not twisted; turn the solenoid plunger (M), if necessary.)
4. Turn the operator knob to the open position.
5. Remove the strip of paper from between the heads.
6. Perform the Head Gap Adjustment (paragraph F.3.3.3).

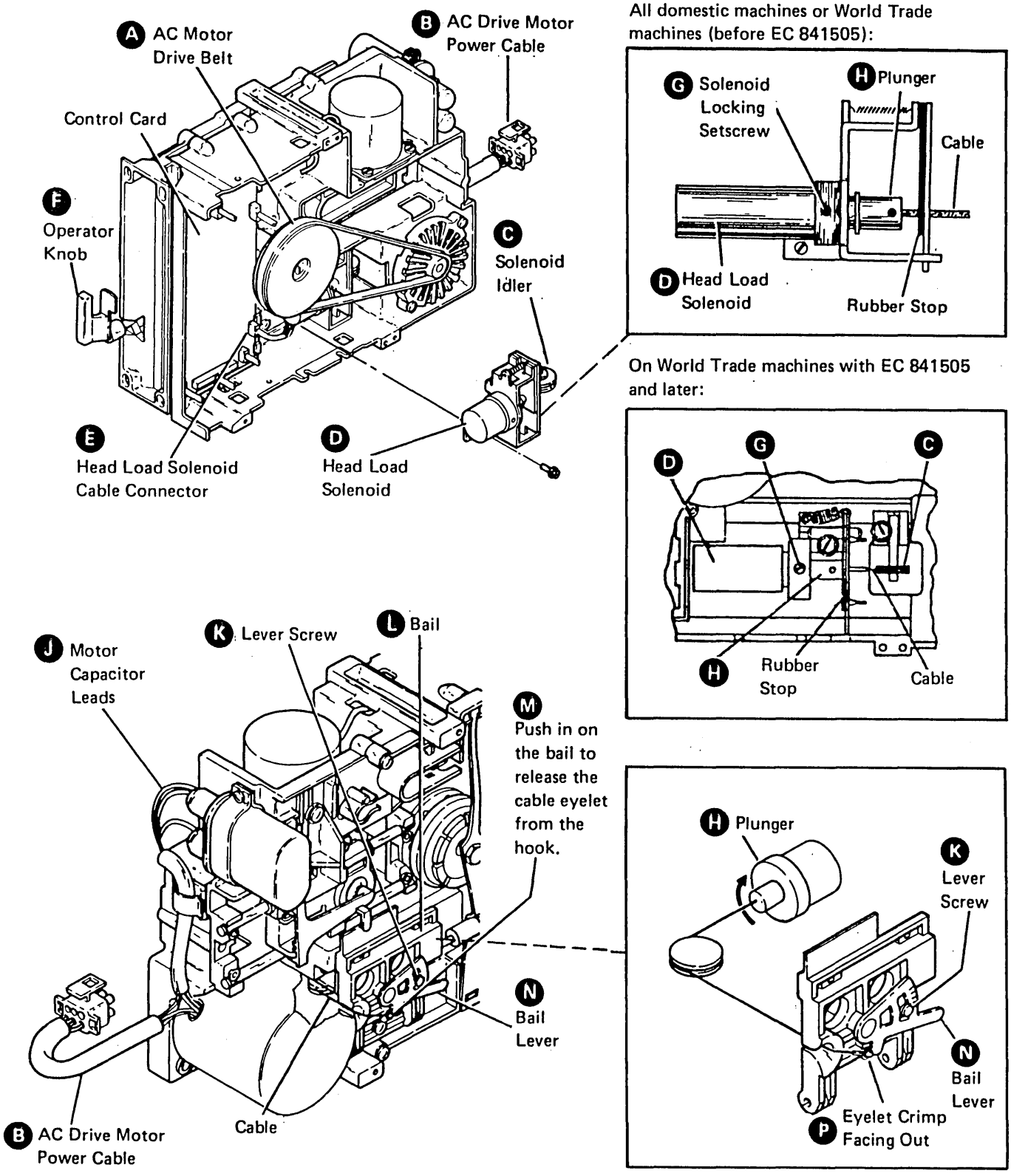

Figure F-29. Bail Removal

F.3.3.7 Solenoid and Idler Removal (Figure F-30)

1. Power down.

DANGER
Voltage is still present at the socket when the power cable is disconnected.

2. Disconnect the ac drive motor power cable (B).
3. Insert a strip of clean paper between the two heads.
4. Turn the operator knob (F) to the closed position.
5. Loosen the lever screw (K).
6. Push the bail (L) inward slightly, and disconnect the cable eyelet (M) from the bail lever (N).
7. Turn the operator knob (F) to the open position.
8. Remove the ac motor drive belt (A).
9. Remove the solenoid cable connector (E) from the control card.
10. On all domestic machines or World Trade machines, prior to EC 841505, remove the solenoid, the bracket, and the cable as a unit (D). On World Trade machines with EC 841505 and later, skip this step.
11. Loosen the solenoid locking setscrew (G) and unscrew the solenoid from the bracket. (The solenoid and the bail actuator cable are exchanged as a unit.)

F.3.3.8 Solenoid and Idler Replacement (Figure F-30)

1. On all domestic machines or World Trade machines, prior to EC 841505, reinstall the solenoid (D) on the bracket and tighten the solenoid locking setscrew (G). On World Trade machines with EC 841505, and later, reinstall the head load solenoid (D) on the casting and tighten the solenoid locking setscrew (G).
2. On all domestic machines or World Trade machines prior to 841505, reinstall the solenoid, bracket, and cable as a unit. On World Trade machines with EC 841505 and later, skip this step.
3. Reconnect the head load solenoid cable connector (E) to the control card.
4. Reinstall the ac motor drive belt (A).
5. Turn the operator knob (F) to the closed position.
6. Push the bail (L) inward slightly, and connect the cable eyelet (M) to the bail lever (N) with the eyelet crimp (P) facing outward. (Ensure that the cable remains on the pulley and is not twisted; turn the solenoid plunger (H) if necessary.)
7. Turn the operator knob (F) to the open position.
8. Remove the strip of paper from between the heads.
9. Perform the Head Gap Adjustment (see paragraph F.3.3.3).
10. Perform the bail adjustment (see paragraph F.3.3.4).

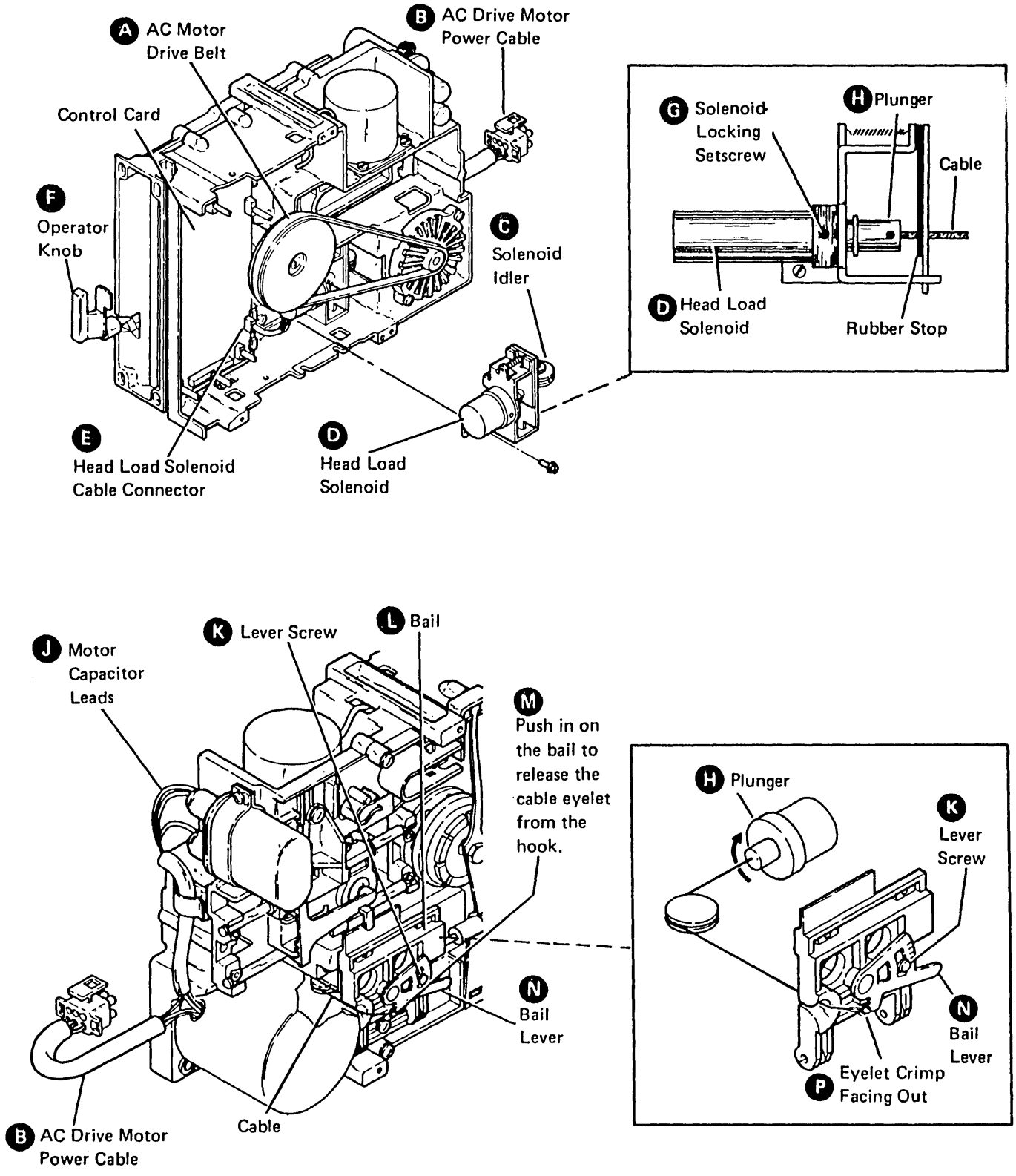

Figure F-30. Solenoid and Idler Removal

F.3.4.1 Drive Motor Removal (Figure F-31)

1. Power down.

DANGER
Voltage is still present at the socket when the power cable is disconnected.

2. Disconnect the ac drive motor power cable (B).
3. Remove the ac motor drive belt (Q).

CAUTION
The motor case becomes hot after continuous use.

4. On all domestic machines or World Trade machines prior to EC 841505, remove the two enclosure mounting screws (P) and remove the fan enclosure (N). On World Trade machines with EC 841505 and later, remove the two mounting screws (L) and remove the ac drive motor.
5. Loosen the drive pulley/fan locking setscrew (M); then remove the ac drive motor pulley/fan assembly (K).

DANGER
High voltage may be present at the capacitor terminals (F).

6. Remove the two capacitor insulator caps (H) from the capacitor terminals.
7. Discharge the capacitor by shorting across its terminals (F) with the large blade screwdriver.
8. Remove the motor capacitor leads (G) from the capacitor terminals.
9. Remove the motor capacitor leads (G) from the cable guide (J) on the casting.
10. Remove the insulator caps (H) from the motor capacitor leads (G).
11. On all domestic or World Trade machines prior to EC 841505, remove the remaining two motor mounting screws (L) and remove the motor (A). On World Trade machines with EC 841505 and later, skip this step.

F.3.4.2 Drive Motor Replacement (Figure F-31)

1. On all domestic machines or World Trade machines prior to EC 841505, install the ac drive motor (A) with the two mounting screws (L). Note in Figure F-31 that the cable (B) and the motor capacitor leads (J) should extend toward the rear of the machine. On World Trade machines with EC 841505 and later, skip this step.
2. Install the ac drive motor pulley/fan (K) on the new motor. Ensure that the setscrew (M) is centered in the flat surface of the motor shaft. (Leave the setscrew loose.)
3. Position the fan and pulley on the motor shaft with a gap of 0.5 mm ± 0.1 mm (0.020 ± 0.004 inch) between the motor face and the fan hub. Tighten the setscrew.
4. On all domestic machines or World Trade machines prior to EC 841505, reinstall the fan enclosure (N) with the belt clearance slots toward the drive hub (R). On World Trade machines with EC 841505 and later, install the ac drive motor (A) with the two mounting screws (L).
5. Reinstall the drive belt (Q).
6. Reinstall the two capacitor insulator caps (H) on the motor capacitor leads (G) (one on leads 2 and 3, and one on lead 1).
7. Reconnect the motor capacitor leads (G) in the guide (J) on the casting.
8. Reinstall the motor capacitor leads (G) on the capacitor terminals (F) (leads 2 and 3 on the top terminal and lead 1 on the bottom terminal).
9. Reinstall the two insulator caps (H) on the capacitor terminals (F).
10. Reconnect the ac drive motor power cable (B).

F.3.4.3 Capacitor Removal (Figure F-31)

1. Power down.

DANGER
Voltage is still present at the socket when the power cable is disconnected.

2. Disconnect the ac drive motor power cable (B).

DANGER
High voltage may be present at the capacitor terminals (F).

3. Remove the two insulator caps (H) from the capacitor terminals (F).
4. Discharge the capacitor by jumpering the capacitor terminals (F) with a large blade screwdriver.
5. Remove the motor capacitor leads (G) from the capacitor terminals.
6. Remove the screw (C) and remove the capacitor bracket assembly (D).

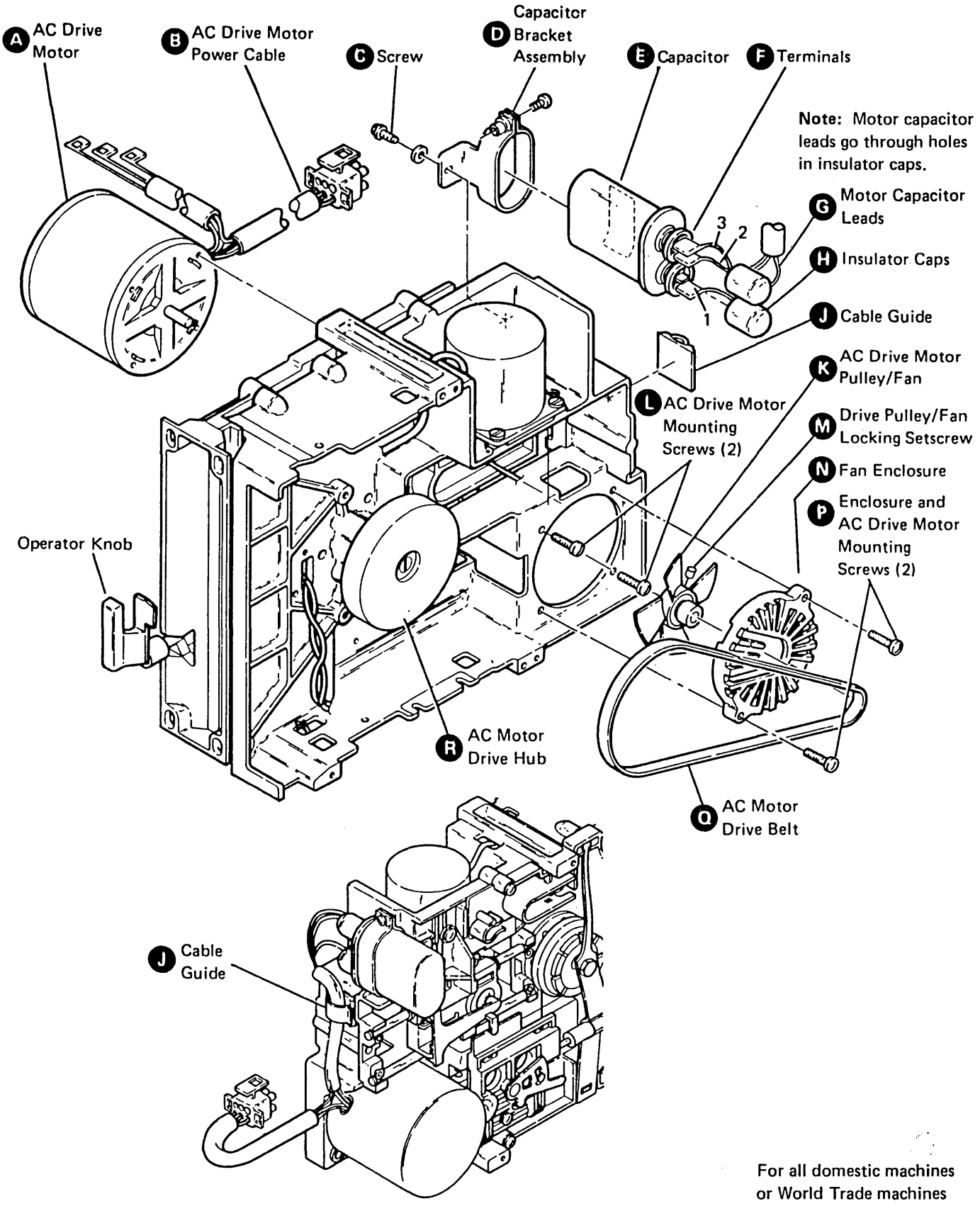

Figure F-31 (Part 1 of 2). AC Drive Motor Removal

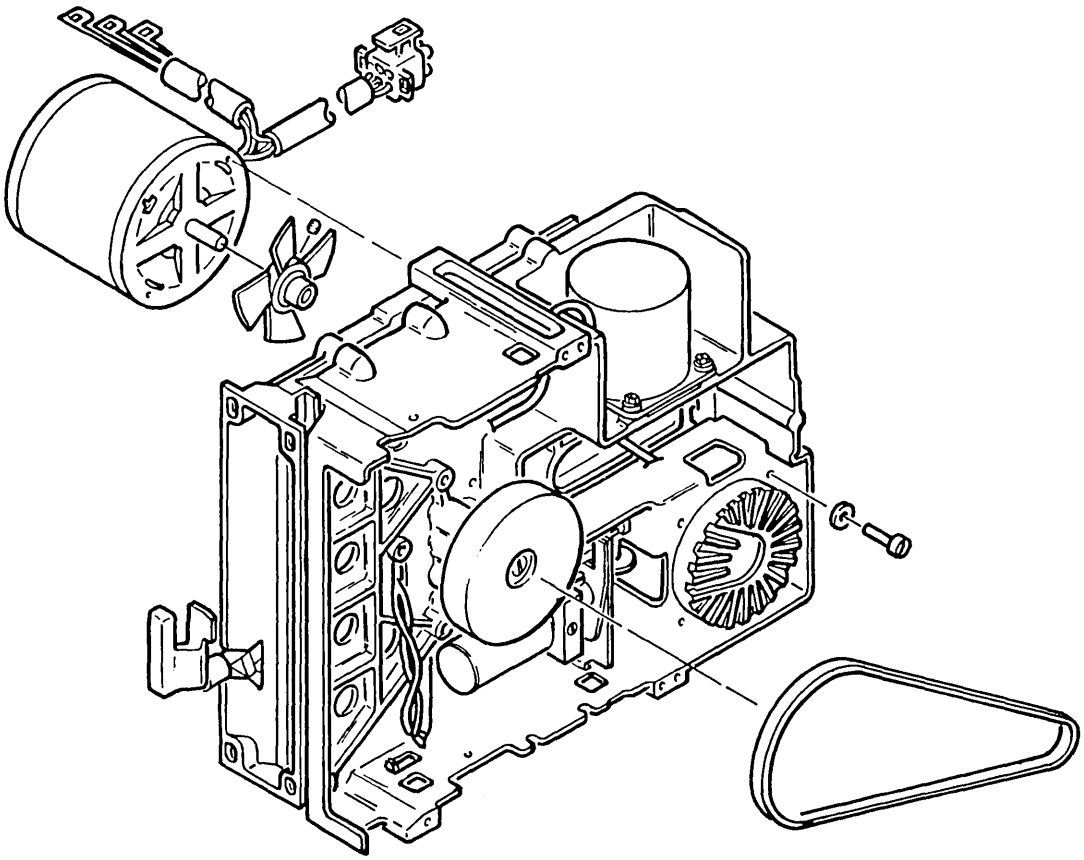

For World Trade machines with EC 841505 and later.

Figure F-31 (Part 2 of 2). AC Drive Motor Removal

F.3.4.4 Capacitor Replacement (Figure F-31)

1. Reinstall the capacitor assembly (D) with the screw (C) and tighten the screw.
2. Reinstall the motor capacitor leads (G) on the capacitor terminals (F) (leads 2 and 3 on the top terminal and lead 1 on the bottom terminal).
3. Reinstall the two insulator caps (H) on the capacitor terminals.

F.3.4.5 Drive Fan and Pulley Assembly Removal (Figure F-31)

1. Power down.

> **DANGER**
> **Voltage is still present at the socket when the power cable (B) is disconnected.**

2. Disconnect the ac drive motor cable (B).
3. Remove the ac drive belt (Q).
4. On all domestic machines or World Trade machines prior to EC 841505, remove the fan enclosure mounting screws (P) and remove the fan enclosure (N). On World Trade machines with EC 841505 and later, remove the ac drive motor (A) with the two mounting screws (L).
5. Loosen the setscrew (M); then remove the ac drive motor pulley/fan (K).

F.3.4.6 Drive Fan and Pulley Assembly Replacement (Figure F-31)

1. Reinstall the ac drive motor pulley (K) on the motor shaft so that the setscrew (M) is centered in the flat surface of the shaft. (Leave the setscrew loose.)
2. Position the fan and pulley on the motor shaft with a gap of 0.5 mm ± 0.1 mm (0.020 ± 0.004 inch) between the motor face and the fan hub. Tighten the setscrew.
3. On all domestic or World Trade machines prior to EC 841505, with the mounting screws (P), reinstall the fan enclosure (N) with the belt clearance slots toward the drive hub (R). On World Trade machines with EC 841505 and later, reinstall the ac drive motor.
4. Reinstall the drive belt (Q).
5. Reconnect the ac drive motor power cable (B).
6. Power up.

F.3.5 Stepper Drive Parts

F.3.5.1 Stepper Motor Removal (Figure F-32)

1. Power down.
2. Remove the head cable connector (L) from the control card.
3. Remove the head cable guide (P).

Warning: The stepper drive band (J) assembly can be easily damaged. Do not bend, crease, or scratch the band.

4. Remove the three mounting screws (A), (F), and (G) and clamp (B) that attach the stepper drive band (J) to the stepper motor drive pulley (C), and carriage bracket (E). (Note the position of the band (J) and clamp (B) for easier replacement.)
5. Remove the band assembly.
6. Measure and record the gap (U) between the stepper motor pulley (C) and the casting for later use.

   Gap is_____.
7. Loosen the stepper pulley clamp screw (Q) and remove the stepper pulley (C) and the clamp (H).
8. Remove the stepper motor cable connector (K) from the control card.
9. Remove the four stepper motor mounting screws (N).
10. Remove the stepper motor (M).

F.3.5.2 Stepper Motor Replacement (Figure F-32)

1. Reinstall the stepper motor (M), using the four mounting screws (N). (Locate the motor cable toward the control card.)
2. Reinstall the stepper motor cable connector (K) on the control card.

Warning: When the stepper motor pulley (C) is tightened by the clamp screw (Q) ensure that the pin located on the back of the stepper motor pulley remains within the cutout slot on the casting.

3. Reinstall the stepper motor pulley (C) and the clamp (H). (Adjust the gap (U) between the pulley and the casting to the measurement recorded in step 6 of paragraph F.3.5.1.) The clamp (H) should be placed even with the end of the stepper motor drive shaft (D).
4. Reinstall the drive band (J). Go to Head/Carriage Replacement (paragraph F.3.2.4, step 5).

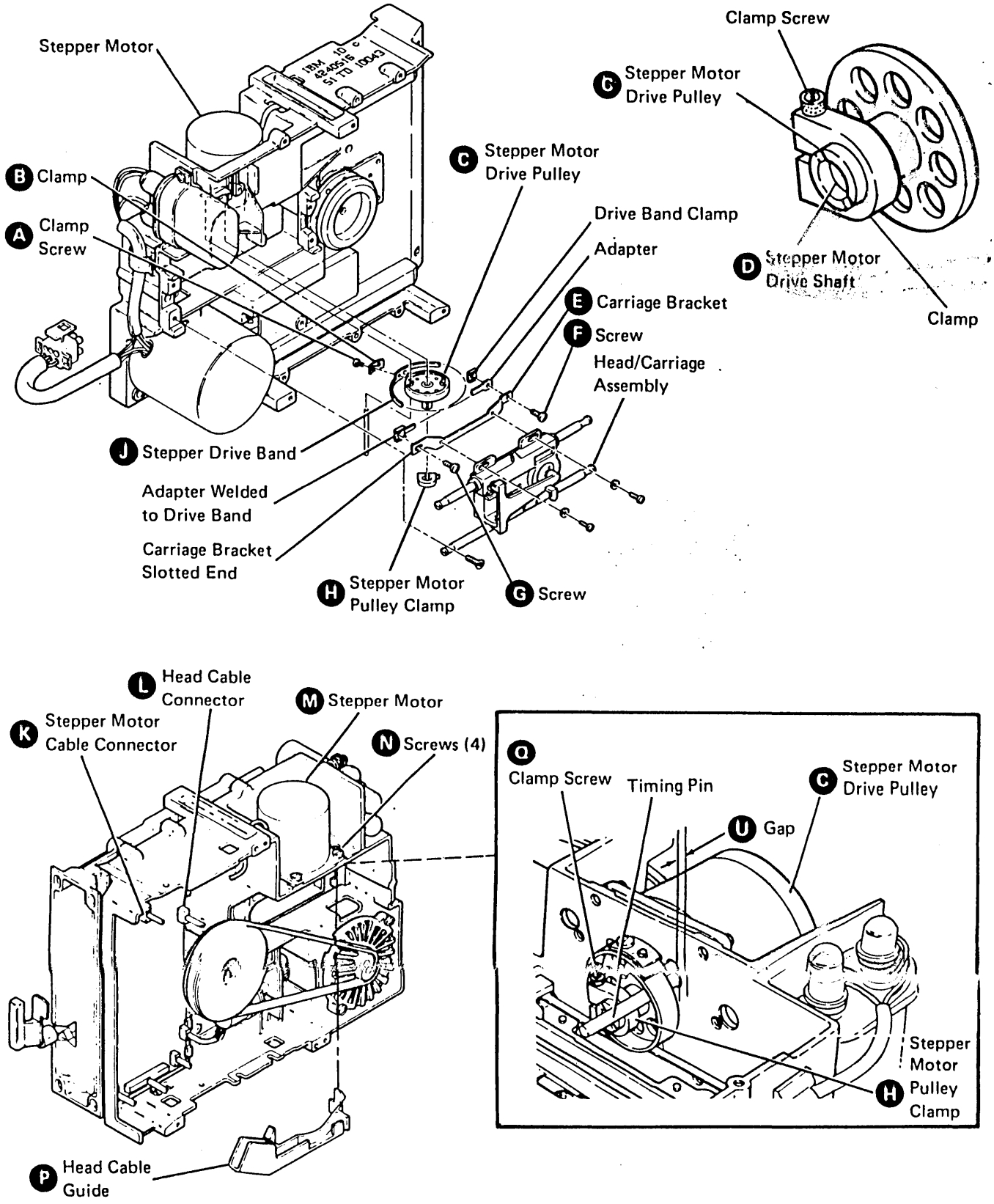

Figure F-32. Stepper Motor Removal and Replacement

F.3.5.3 Stepper Pulley and Clamp Removal (Figure F-33)

1. Power down.
2. Remove the drive band (see paragraph F.3.5.7).
3. Measure and record the gap (C) between the stepper motor pulley and the casting.

   Gap is _____ .
4. Loosen the clamp screw (B) ; then remove the pulley (D) and the clamp (A) .

F.3.5.4 Stepper Pulley and Clamp Replacement (Figure F-33)

Warning: When the stepper motor pulley (C) is tightened by the clamp screw (Q) , ensure that the pin located on the back of the stepper motor pulley remains within the cutout slot on the casting.
the casting.

1. Reinstall the pulley (D) , the clamp (A) , and the clamp screw (B) . The gap should be the same as in step 3 of paragraph F.3.5.3. Ensure that the clamp is even with the end of the stepper motor drive shaft.
2. Reinstall the drive band. Go to Head/Carriage Replacement (paragraph F.3.2.4, step 5).

F.3.5.5 Drive Band Service Check (Figure F-33)

1. Power down.
2. Turn the stepper motor pulley by hand between tracks 00 and 76.
3. If the drive band does not track parallel to the pulley edge (F) , go to Drive Band Adjustment (paragraph F.3.5.6, step 6).

   If the band shows signs of physical damage (F) exchange the band (see paragraphs F.3.5.7 and F.3.5.8).

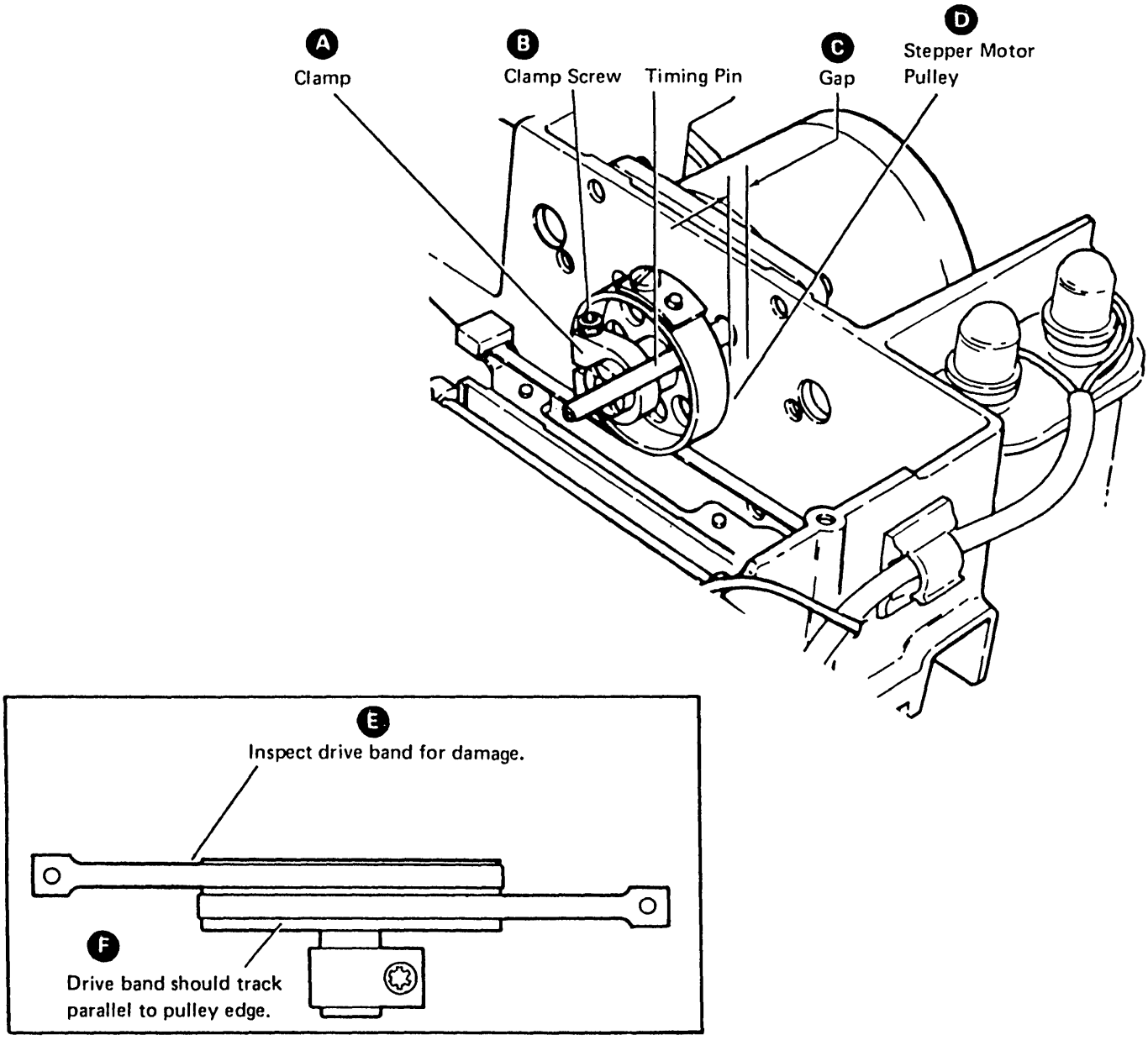

Figure F-33. Stepper Motor Pulley and Clamp Removal and Replacement

F.3.5.6 Drive Band Adjustment (Figure F-34)

1. Power down.
2. Remove the head connector (M) from the control card.
3. Remove the head cable guide (N).
4. Loosen the three mounting screws (A), (F), and (H) that attach the band to the pulley (C) and the carriage bracket (E).
5. Tighten screw (F). (Ensure that the band (L) remains parallel to the carriage bracket (E).)
6. Tighten screw (A). (Ensure that the band remains parallel to the pulley edge (U).)
7. Block the head/carriage assembly (G), about 25 mm (1 inch) from the end of the casting (Q).
8. Pull on the loose end of the band with 2.5 ± 0.25 pounds force (P) and tighten the screw (H). (Ensure that the band remains parallel to the pulley edge, (U). If it does not, repeat the adjustment, starting at step 5.)
9. Move the carriage to track 00 and then to track 76, and ensure that the band (L) tracks parallel to the pulley edge (U).
10. Adjust the head/carriage assembly (G) (go to paragraph F.3.2.2, step 12).

F.3.5.7 Drive Band Removal (Figure F-34)

1. Power down.
2. Remove the head connector (M) from the control card.
3. Remove the head cable guide (N).

   Observe the position of the band (L) and clamp (S) before performing the next step.

Warning: The band (L) is easily damaged (T). Do not bend, crease, or scratch the band.

4. Remove the three mounting screws (A), (F), and (H) and the clamp (B) that attach the band (L) to the stepper motor pulley (C) and the carriage bracket (E).
5. Remove the band assembly.
6. If you have entered this procedure from Stepper Pulley and Clamp Removal (paragraph F.3.5.3), return to step 3 of paragraph F.3.5.3.

F.3.5.8 Drive Band Replacement (Figure F-34)

Warning: The band (L) is easily damaged (T). Do not bend, crease, or scratch the band. Do NOT use a damaged band.

1. Attach the end of the band (L) with the welded adapter (K) to the slotted end (J) of the carriage bracket. Leave the clamp screw (H) loose.
2. Attach the band to the stepper motor pulley (C) with the clamp screw (A) and the clamp (B).

   Ensure that the band is parallel to the pulley edge (U).

3. Attach the other end of the band to the carriage bracket with the screw (F) and the drive band clamp (D). Ensure that the band is parallel to the carriage bracket.
4. Adjust the drive band. (Go to step 8 of paragraph F.3.5.6.)

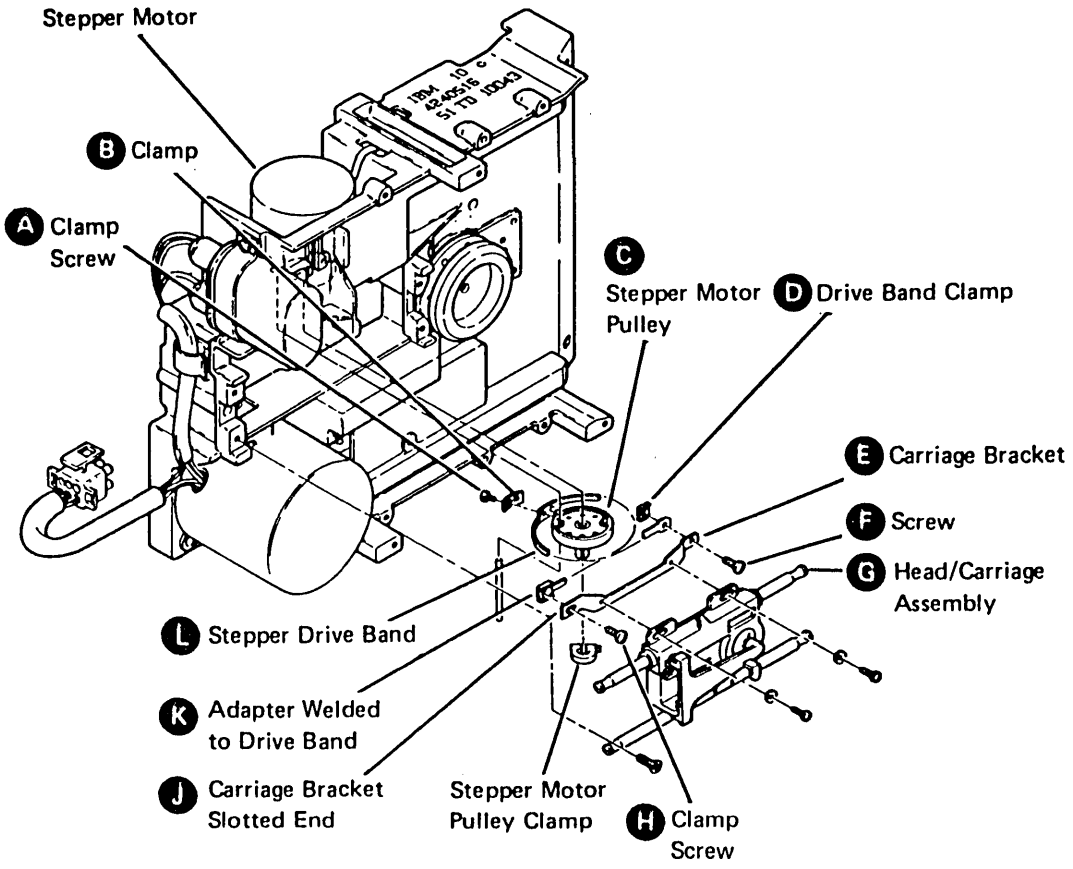

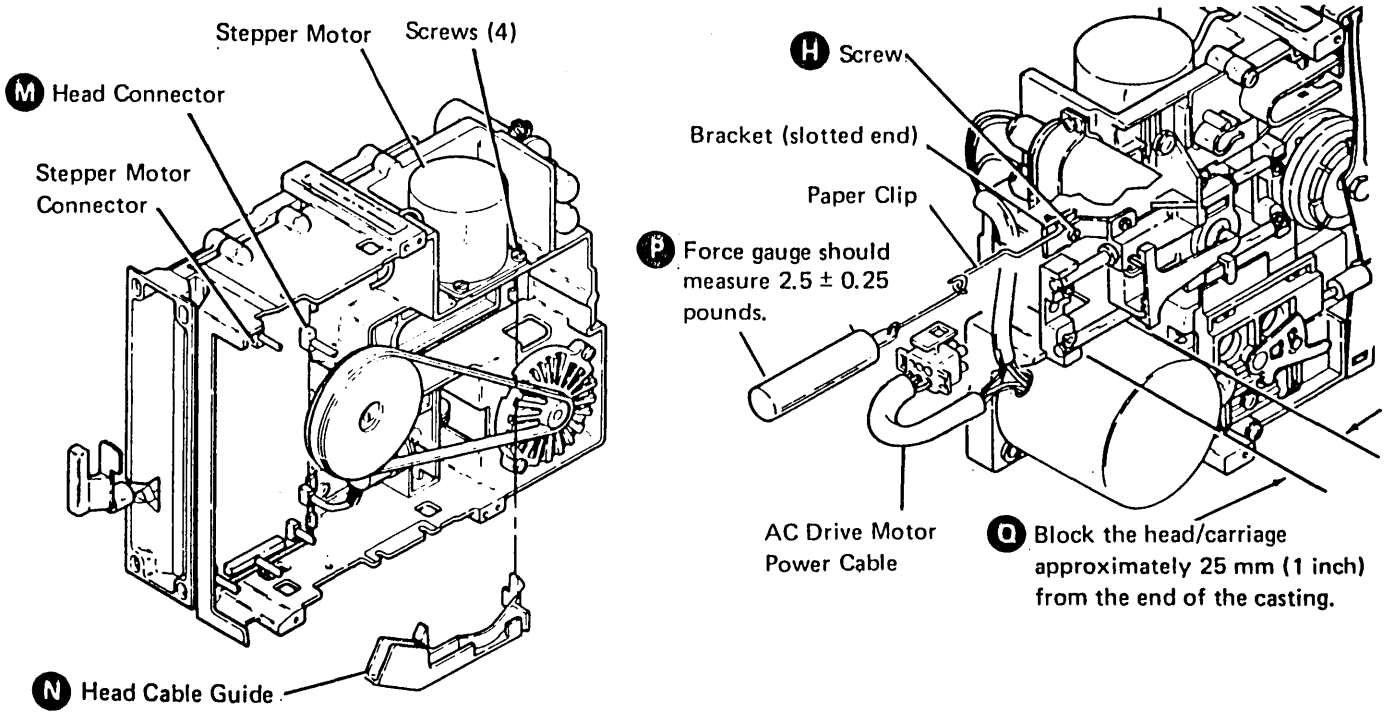

Figure F-34 (Part 1 of 2). Drive Band Adjustments

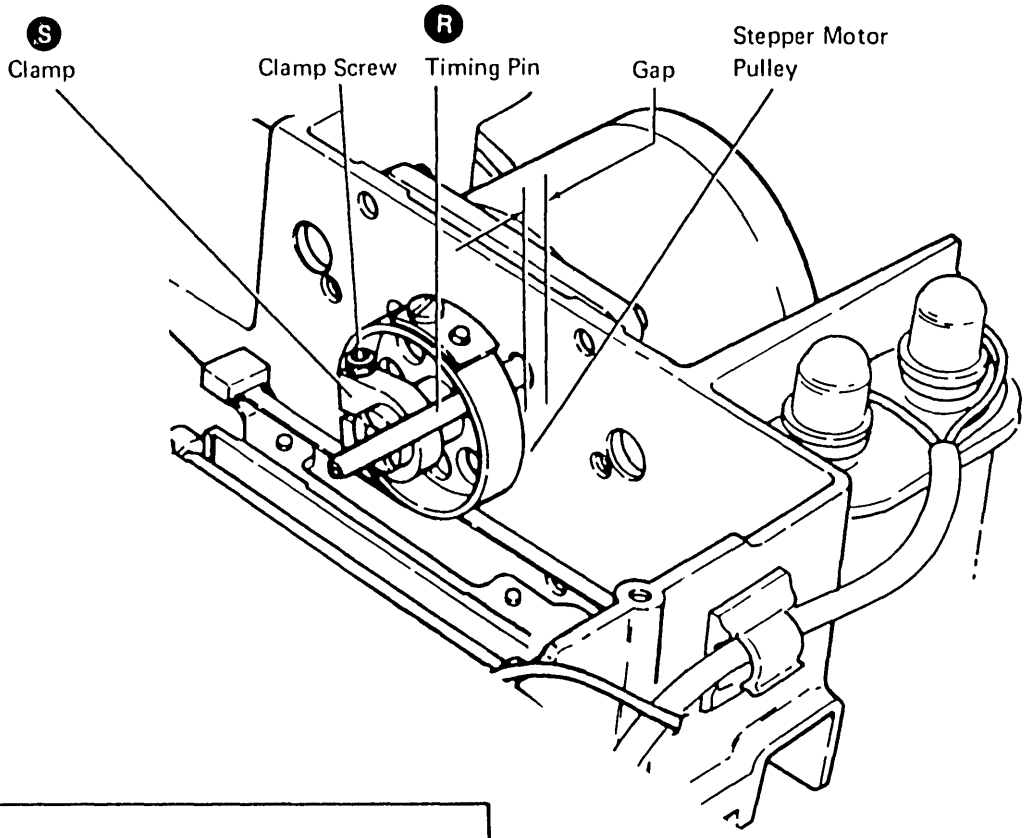

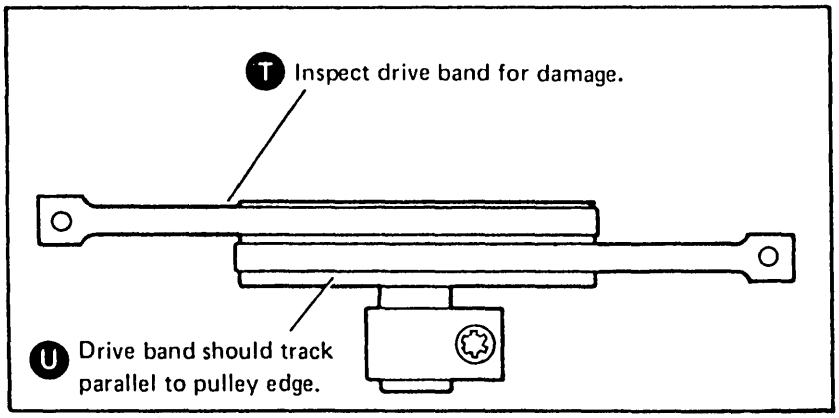

Figure F-34 (Part 2 of 2). Drive Band Adjustments

F.3.6 LED and PTX Assemblies

F.3.6.1 Diskette Speed Service Check (Figure F-35)

1. Insert a diskette 1, and close the operator knob. See Diskette Use (paragraph F.1.1.2).
2. To activate the head load solenoid, install a jumper (A) from TPA07 (ground) to TPA08 (– 'head load').
3. Set up an oscilloscope as shown in the chart (E).

   Note: Use a Tektronix 453, 454, or a similar oscilloscope with x10 probes.
4. Observe an index pulse width of 1.5 to 3.0 ms (C) occurring every 166.7 ± 4.2 ms (B). Pulse amplitude should be between 2.4 and 4.2 Vdc (D).
5. Remove the jumper.
6. Remove the diskette. See Diskette Use (paragraph F.1.1.2).

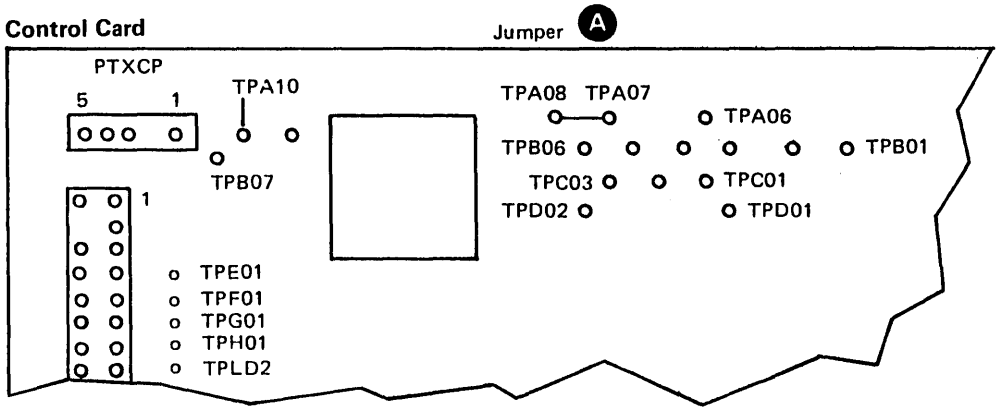

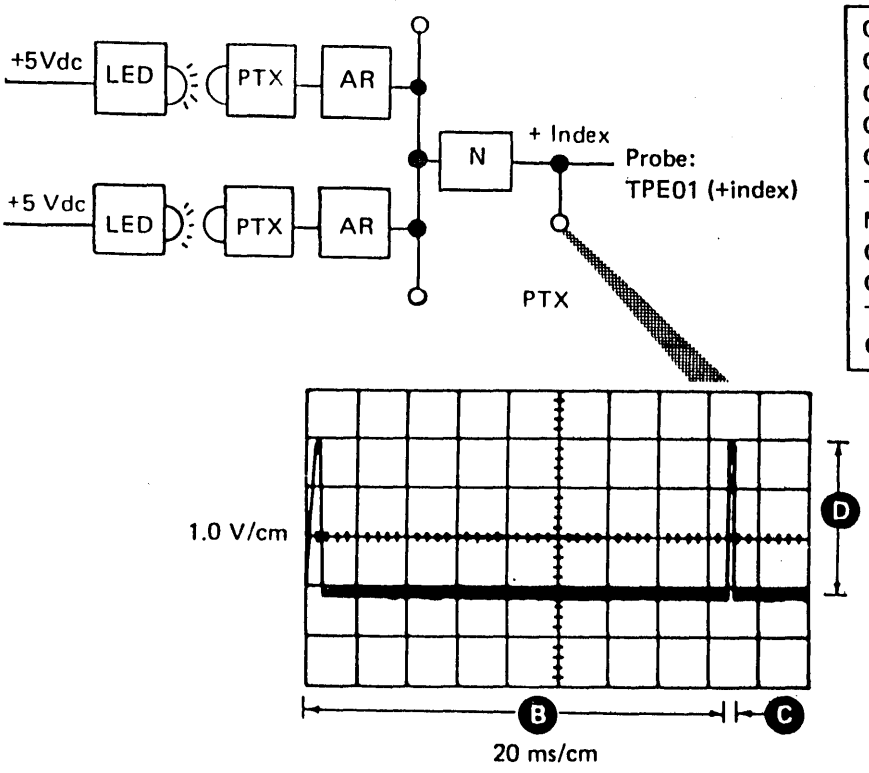

E Oscilloscope Settings

Channel A sweep mode	Normal
Channel A level	+
Channel A coupling	DC
Channel A slope	+
Channel A source	Internal
Trigger	Normal
Mode	Channel 1
Channel 1 volts/division	1.0 V/cm
Channel 1 input	DC
Times per division	20 ms
Channel 1 probe to	+Index Test Pin

Figure F-35. Diskette Speed Check

F.3.6.2 LED Output Service Check (Figure F-36)

1. Connect the negative probe (C) of the multimeter to the TPA07 (ground) on the control card (A).
2. Set the multimeter scale to 5 Vdc, and connect the positive probe (B), to the LED voltage test pin TPLD2.
3. Check for a voltage level of 1 Vdc to 2 Vdc (D).
4. Move the positive probe to LED voltage test pin TPLD1.
5. Check for a voltage level of 1 Vdc to 2 Vdc (D).

F.3.6.3 LED Removal (Figure F-37)

1. Power down.
2. Remove the LED connector (B) from the control card.
3. Remove the LED cable. (Note the cable path for future replacement.)
4. Remove the LED mounting screw (D); then remove the LED assembly (C).

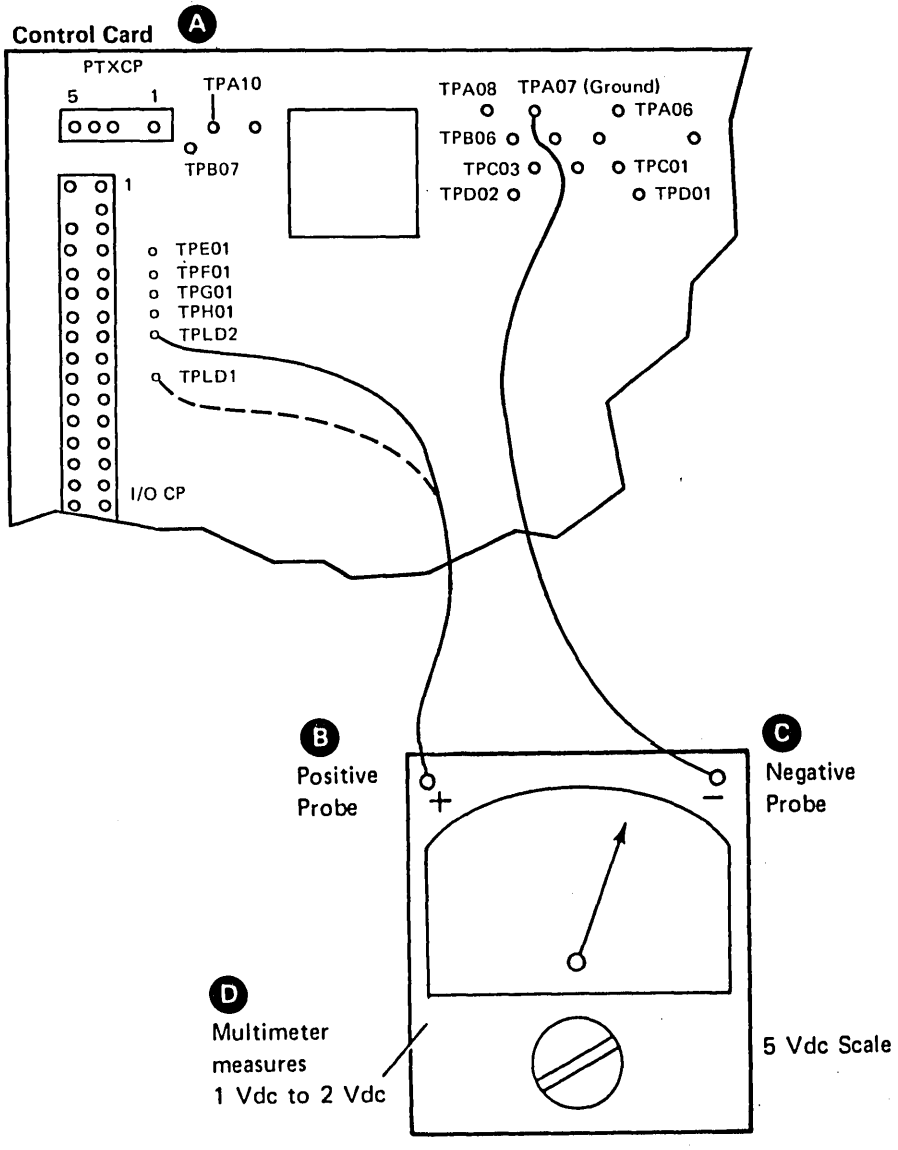

Figure F-36. LED Output Check

F.3.6.4 LED Replacement (Figure F-37)

1. Reinstall the LED cable, the LED assembly (C) and the mounting screw (D) on the diskette guide (A).
2. Reconnect the LED connector (B) to the control card.

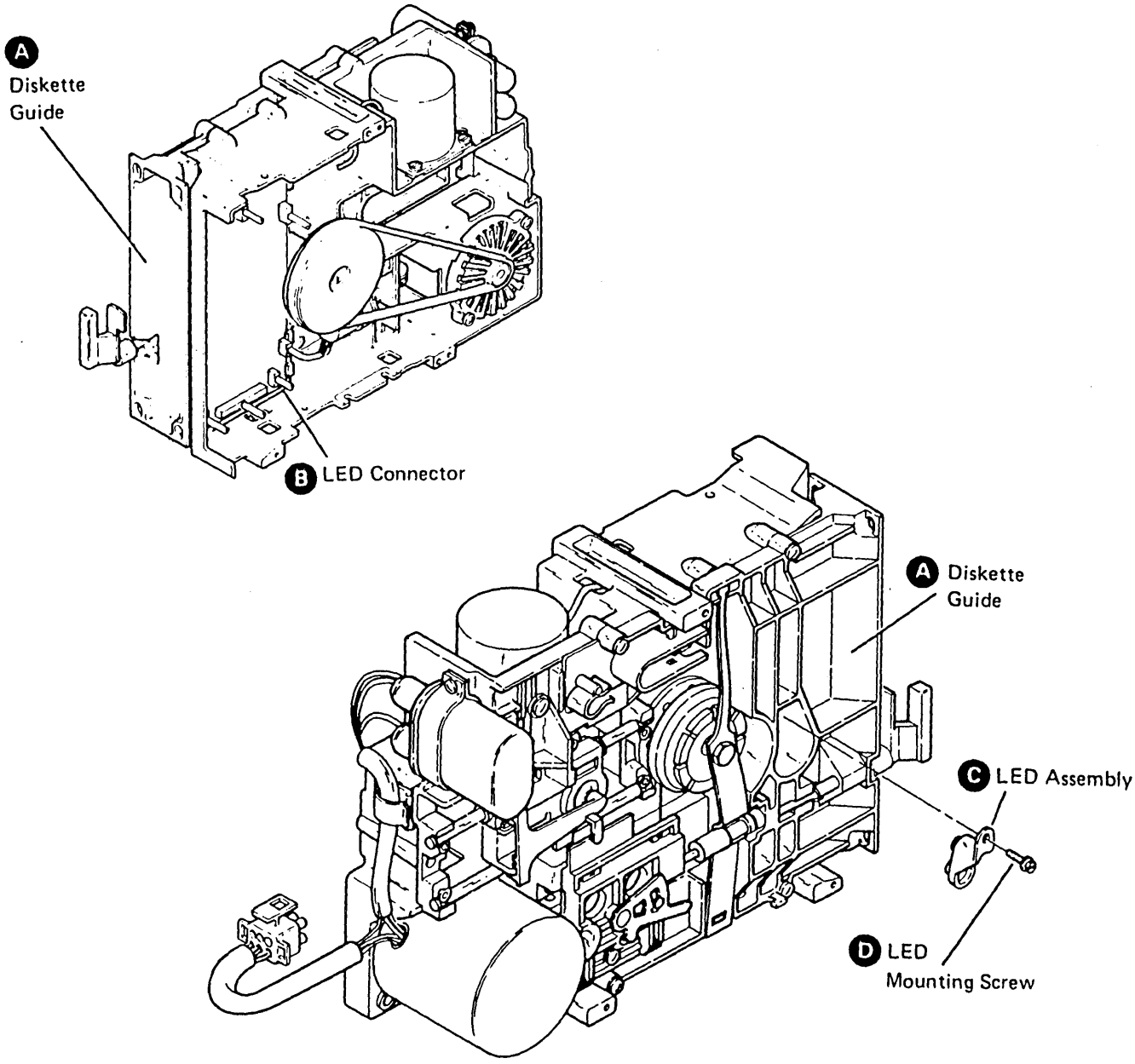

Figure F-37. LED Removal and Replacement

F.3.6.5 PTX Amplifier Service Check (Figure F-38)

1. Power down.

DANGER
Voltage is still present at the socket when the power cable is disconnected.

2. Disconnect the ac drive motor power cable (A).
3. Remove the PTX connector (B) from the control card.
4. Power up.
5. Connect the positive probe (E) of multimeter (D) (15 Vdc scale) to the index test pin TPE01 on the control card.
6. Connect the negative probe (F) of the multimeter of TPB02 (ground).
7. Check the multimeter (D) for a reading of less than 1 Vdc.
8. Install one end of jumper (C) to pin A04 of the PTXCP socket on the control card.
9. Observe the multimeter, and touch the other end of the jumper several times to pin A01 of the PTXCP socket on the control card. The multimeter should read 2.5 Vdc or more when the test pin is touched. (A wrong measurement can occur the first time the test pin is touched.)
10. Repeat steps 8 and 9 with the jumper on pin A03 of the PTXCP socket on the control card.
11. Power down.
12. Remove the jumper.
13. Reinstall the PTX connector on the control card.
14. Reconnect the drive motor power cable.
15. Power up.

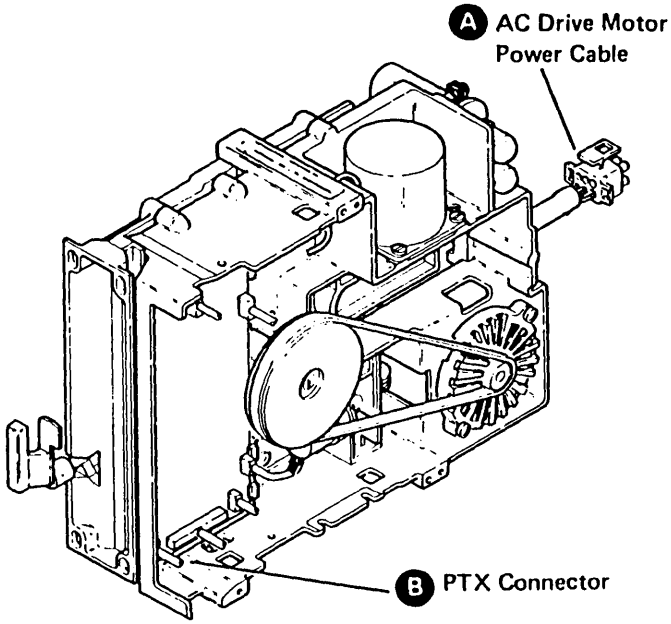

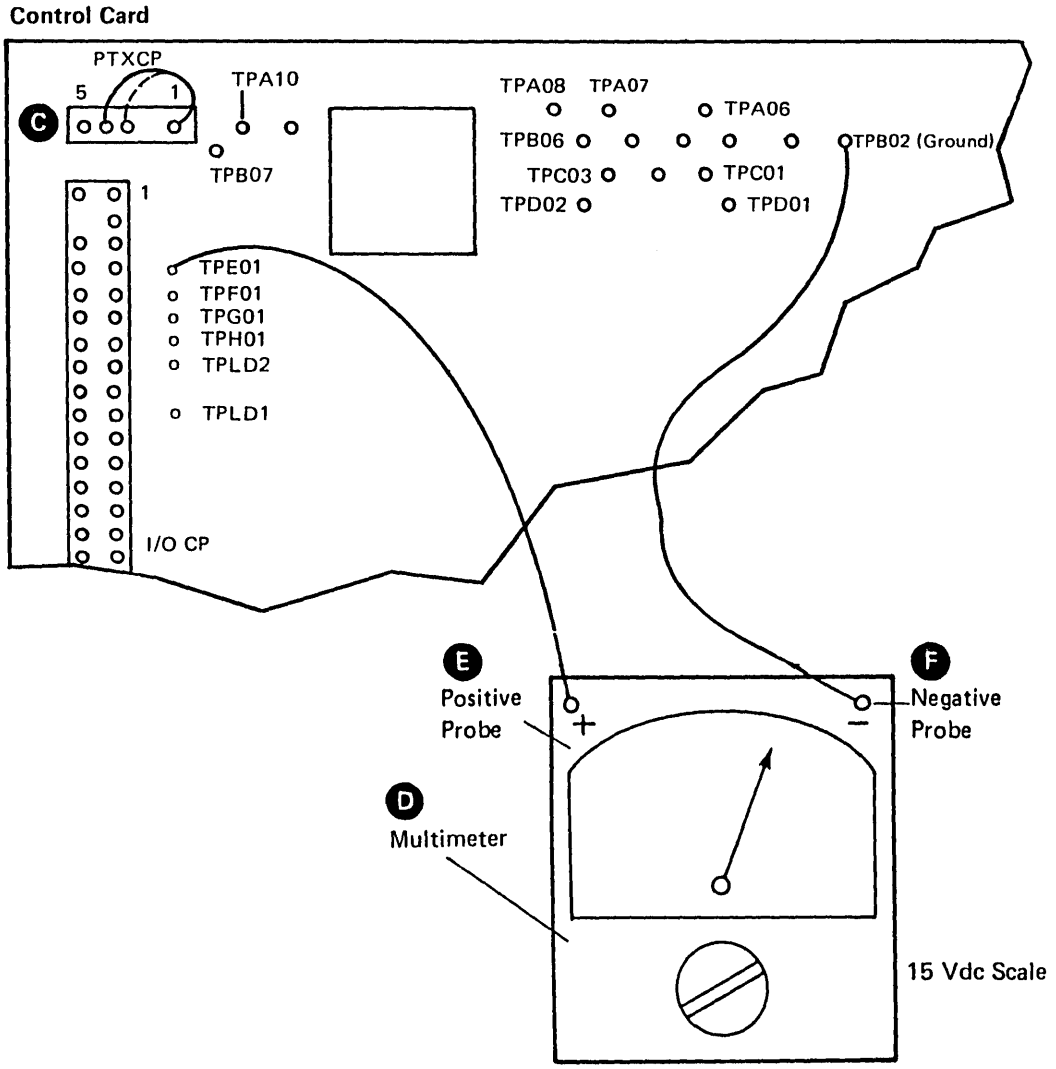

Figure F-38. PTX Amplifier Service Check

F.3.6.6 PTX Removal (Figure F-39)

1. Power down.
2. Remove the LED connector (F) from the control card. (Note the cable path for easier replacement.) Pull the cable and the connector through the casting.
3. Turn the operator knob (A) to the closed position.
4. Loosen the lever screw (R).
5. Push the bail (Q) inward slightly, and disconnect the bail actuator cable eyelet (I) from the hook (N) on the bail lever (S).
6. Turn the operator knob (A) to the open position.
7. Place a strip of clean paper between the heads.

Warning: Ensure that the heads do not touch each other when the bail (Q) is removed from under the head arm (G).

8. Remove the four diskette guide mounting screws (P).
9. Remove the diskette guide (M) by lifting it up and carefully sliding the bail (Q) from under the head load arm (G).
10. Remove the five remaining connectors (B) from the control card. (Note the connector locations and cable paths for easier replacement.)
11. Loosen the control card retainer screw (E).

Warning: Be careful not to damage the control card.

12. Turn the two control card retainers (D) out of the control card path, and remove the control card (C). (Note the position of the control card for easier replacement.)
13. Remove the PTX mounting screw (L) and the PTX assembly (K). (Note the cable path for future replacement.)

F.3.6.7 PTX Replacement (Figure F-39)

1. Reinstall the PTX assembly (K) and the PTX mounting screw (L).
2. Reinstall the control card (C) and turn the two retainers (D) inward until they prevent the control card from moving.
3. Tighten the two retainer screws (E).
4. Reinstall the five connectors (B) on the control card.
5. Reinstall the diskette guide (M). Place the bail below the head load arm (G).
6. Reinstall the four diskette guide mounting screws (P).
7. Reinstall the LED connector (F) on the control card. Go to Bail Replacement (paragraph F.3.3.6, step 2).

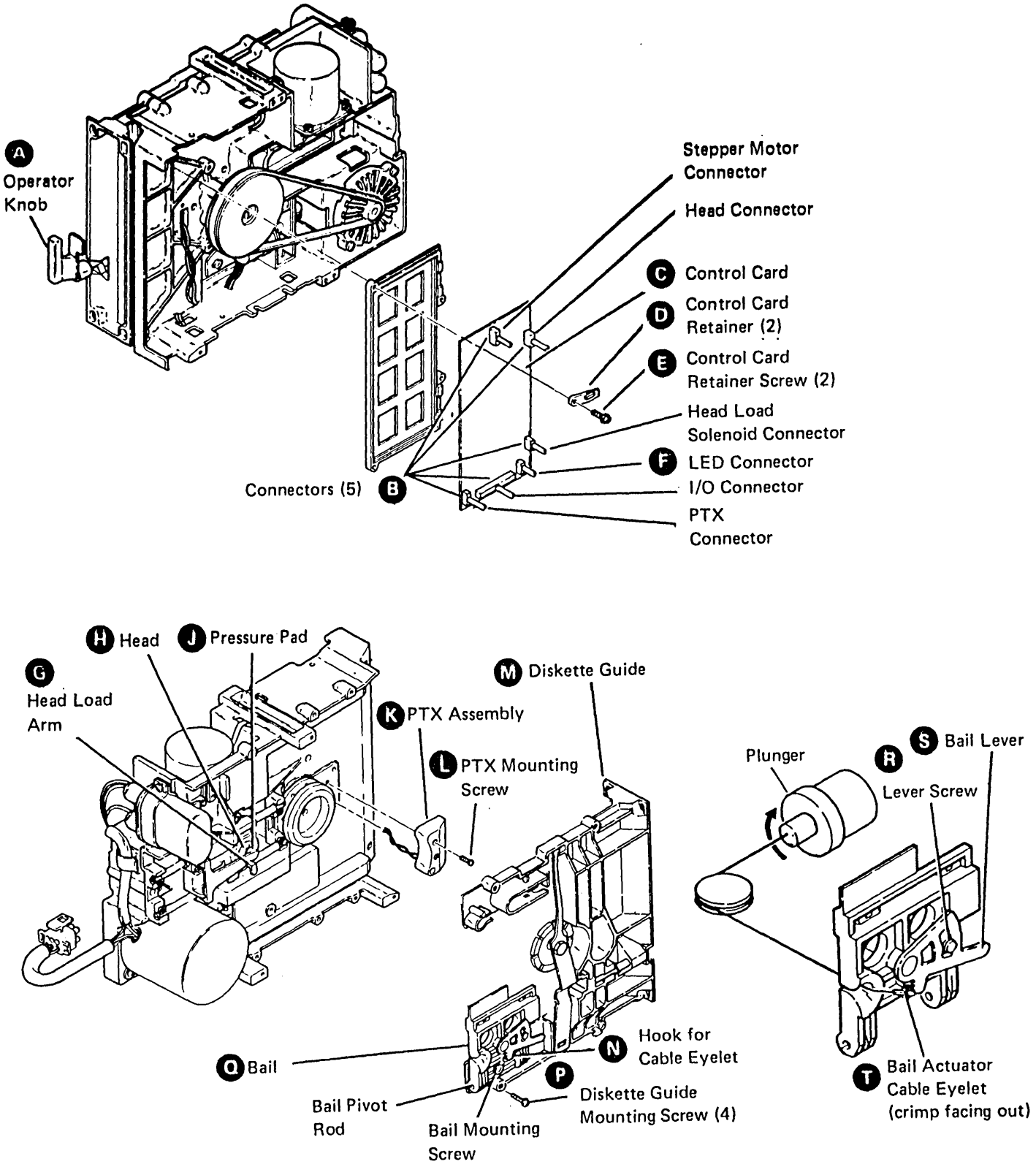

Figure F-39. PTX Removal and Replacement

F.3.7 Diskette Drive Control Card

F.3.7.1 Control Card Removal (Figure F-40)

1. Power down.
2. Remove the six connectors (A) from the control card.
3. Loosen the two retainer screws (D) and turn the two retainers (C) outward until they are no longer in the path of the control card (B).
4. Remove the control card.

F.3.7.2 Control Card Replacement (Figure F-40)

1. Reinstall the control card (B).
2. Turn the two retainers (C) inward slightly until they prevent the card from moving.
3. Tighten the two retainer screws (D).
4. Reinstall the six connectors (A) on the control card.
5. Power up.

F.3.7.3 Control Card Test Pins and Connector Pins

See Figure F-41 to check test points and Figure F-42 to check connector pins.

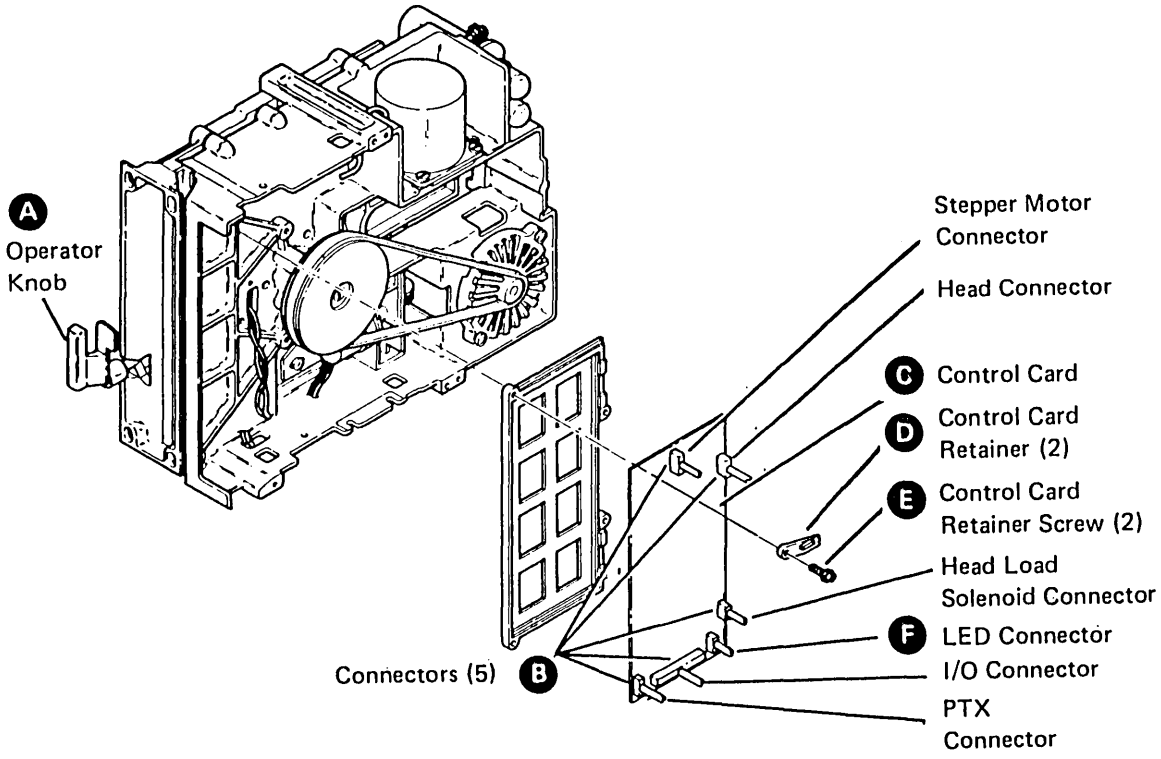

Figure F-40. Diskette Drive Control Card

1. Stepper Motor
2. AC Drive Pulley (With Fan Hidden)
3. AC Drive Belt
4. Solenoid Idler
5. Head Load Solenoid
6. Spindle Pulley
7. Diskette Drive Control Card
8. Diskette Locking Lever
9. Collet
10. Pressure Roll
11. Head Load Bail
12. AC Drive Motor
13. Head/Carriage Assembly
14. Timing Pin (Old)
15. Stepper Motor
16. Thickness Gauge Clip
17. Carriage Pressure Spring
18. Drive Hub
19. Collet Flat Spring
20. Timing Pin (New)

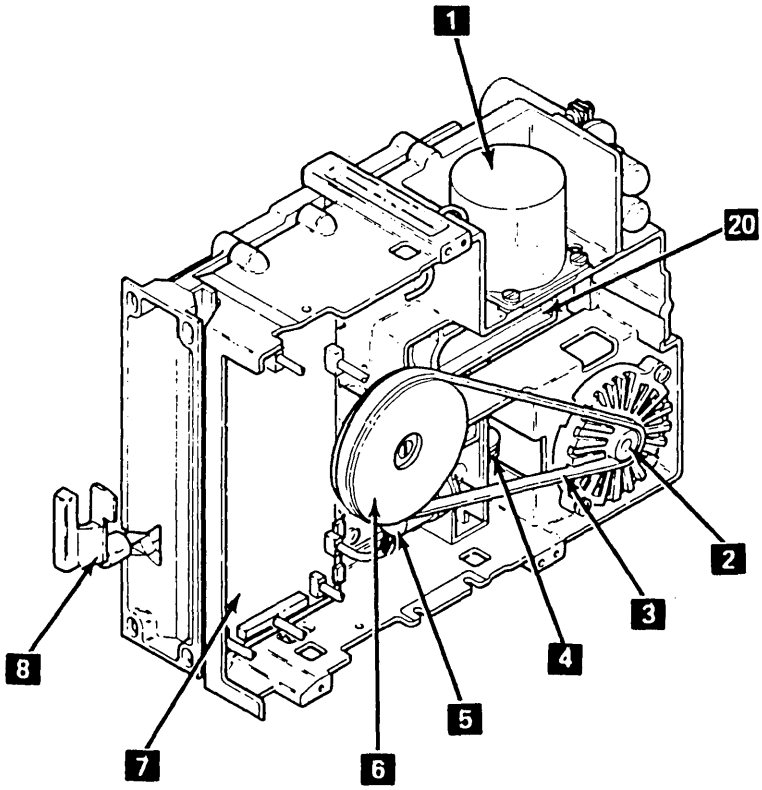

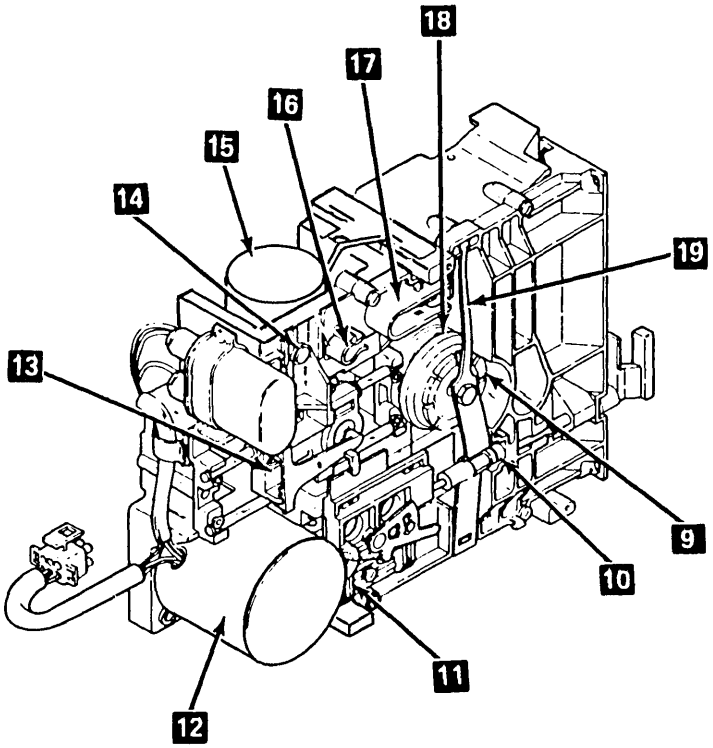

Figure F-41 (Part 1 of 2). Diskette Drive Locations and Card Test Points

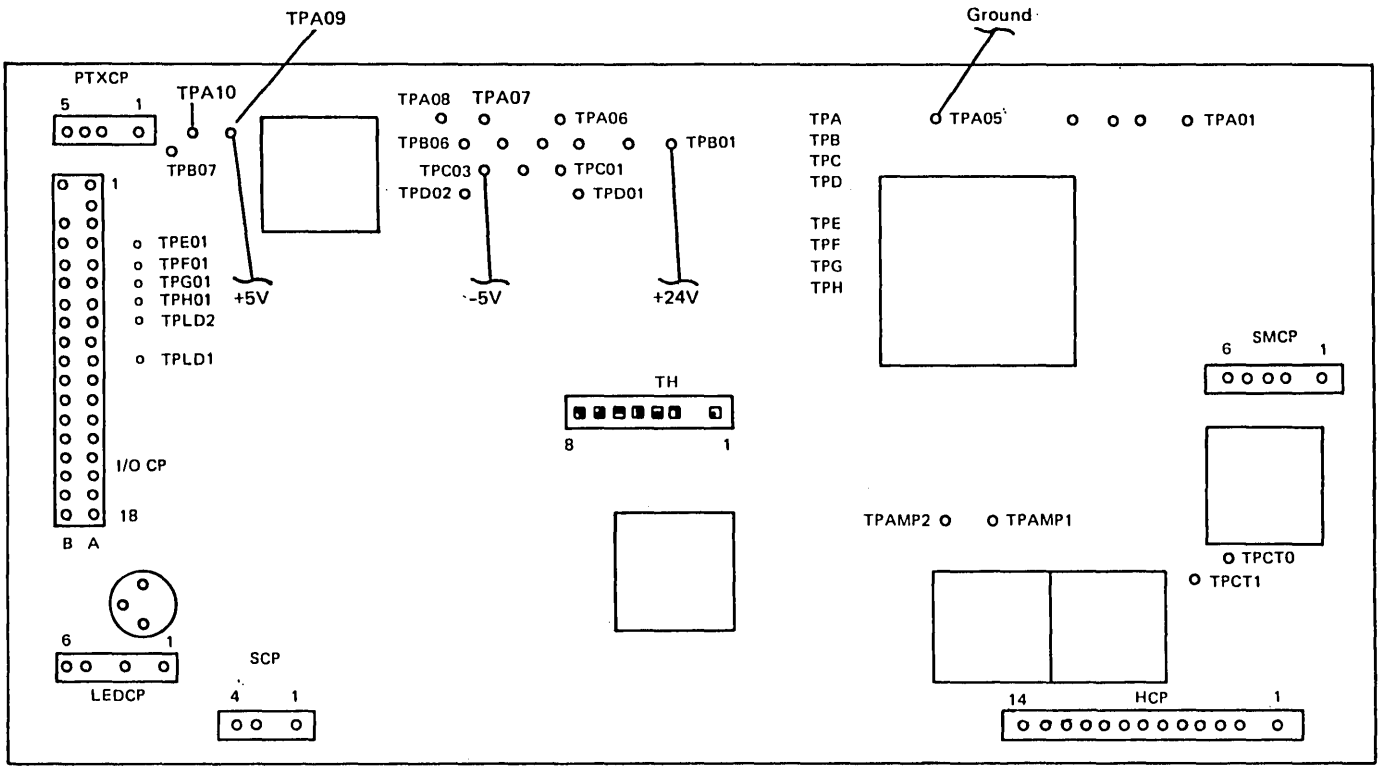

TH01	Diff Read B
TH02	No Pin
TH03	Diff Read A
TH04	-High Gain
TH05	-Disable Stepper Motor
TH06	+14V
TH07	Access Clamp Voltage
TH08	Oscillator

TPA01	MC-3
TPA02	MC-1
TPA03	MC-2
TPA04	MC-0
TPA05	Ground
TPA06	+Erase Gate
TPA07	Ground
TPA08	-Head Load
TPA09	+5V dc
TPA10	51TD PTX
TPB01	+24V dc
TPB02	Ground
TPB03	+Select Head 1
TPB04	+Write Gate
TPB05	+Head Engage
TPB06	Write Data

TPB07	31SD PTX
TPC01	+Access 0
TPC02	+Inner Tracks
TPC03	-5V dc
TPD01	+Access 1
TPD02	+Switch Filter
TPE01	+Index
TPF01	+Diskette Sense
TPG01	+Write Erase Enabled
TPH01	+File Data
TPLD2	51TD LED Voltage
TPLD1	51TD LED Voltage
TPAMP2	Preamp TP2
TPAMP1	Preamp TP1
TPCT0	Center Tap Head 0
TPCT1	Center Tap Head 1

Figure F-41 (Part 2 of 2). Diskette Drive Locations and Card Test Points

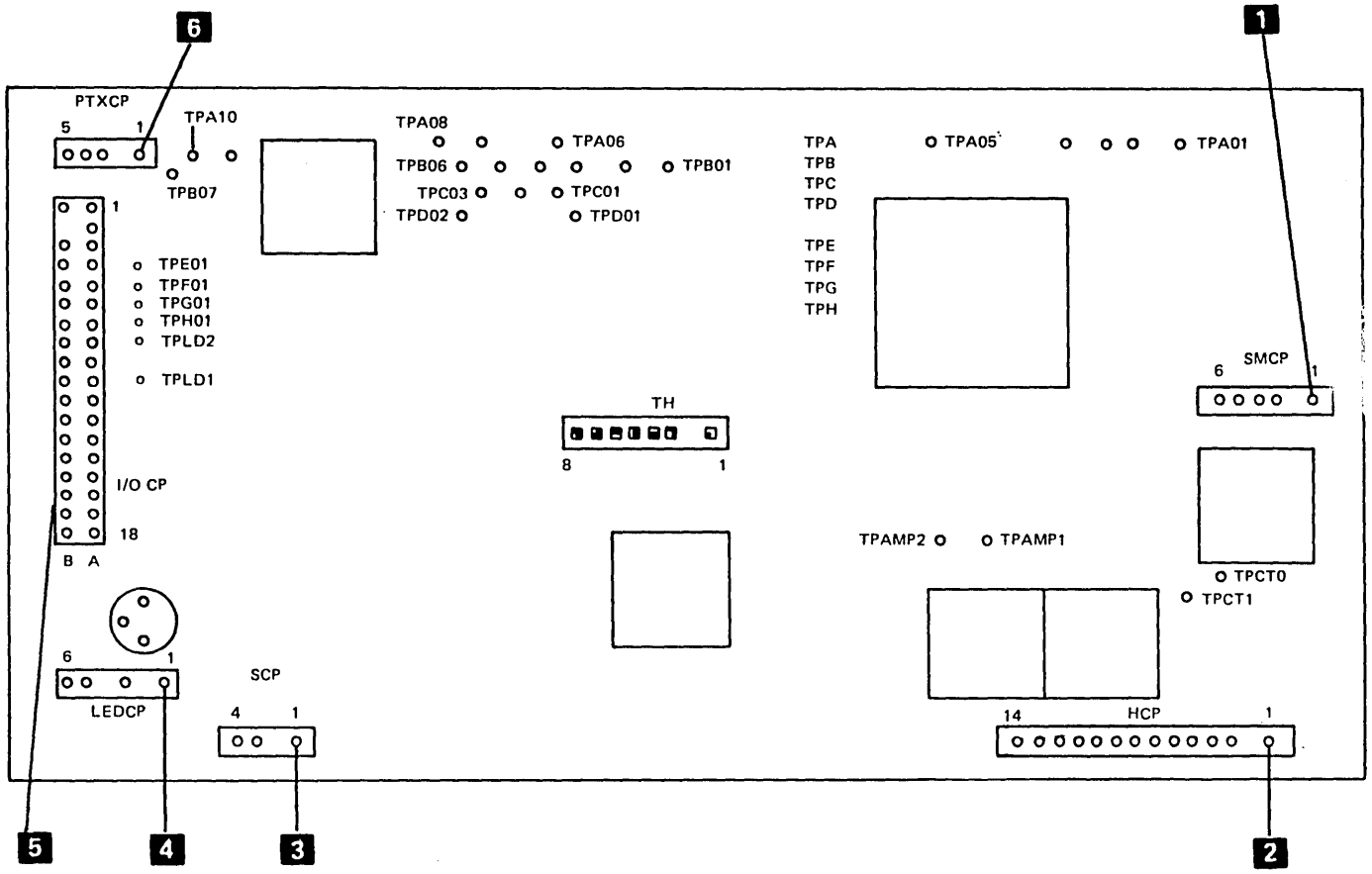

1 Stepper Motor Connector

A01	+24V
A02	blank
A03	MC-3
A04	MC-2
A05	MC-1
A06	MC-0

2 Head Connector

A01	not used
A02	blank
A03	head 0 read/write coil
A04	head 0 center tap
A05	head 0 read/write coil
A06	head 0 erase
A07	head 0 erase common
A08	ground
A09	ground
A10	head 1 erase common
A11	head 1 erase
A12	head 1 read/write coil
A13	head 1 center tap
A14	head 1 read/write coil

3 Solenoid Connector

A01	not used
A02	blank
A03	+head load
A04	-head load

4 LED Connector

A01	diskette 2, 2D ground
A02	blank
A03	diskette 2, 2D ground
A04	blank
A05	diskette 1 ground
A06	diskette 1 anode

5 I/O Interface Connector

A01	-5V
A02	power supply ground
A03–A18	ground
B01	+5V
B02	blank
B03	+24V
B04	+index
B05	+diskette 2 sense
B06	+write/erase sense
B07	+file data
B08	+inner tracks
B09	+erase gate
B10	+access 0
B11	+select head 1
B12	not used
B13	+access 1
B14	+write gate
B15	+head engage
B16	+switch filter
B17	write data
B18	not used

6 PTX Connector

A01	diskette 1 col (+5V)
A02	blank
A03	diskette 1 PTX emitter
A04	diskette 2, 2D PTX emitter
A05	diskette 2, 2D col (+5V)

Figure F-42. Diskette Drive Card Connector Pins

Appendix G. Glossary

The following terms are defined as used in this manual.

A/FE. Americas, Far East

carrier. A continuous frequency capable of being modulated or impressed with a second (information-carrying) signal.

category A terminals. Terminals that can be attached to type A adapters. For example the 3178, 3278, 3279, and 3290 Displays, the 3287 Models 1, 2, 1C and 2C, the 3262 Models 3 and 13, and the 3289 Models 1 and 2 Printers.

category B terminals. Terminals that can be attached to type B adapters. For example the 3277 Display, the 3284, 3286, 3287 Models 1 and 2, and 3288 Printers.

CCITT. Comite Consultatif International Telegraphique et Telephonique (Consultative Committee on International Telephone and Telegraph).

Data Terminal Equipment (DTE). The equipment that serves as a data input and/or output device and provides data communication control functions. Can be a terminal or a communication controller.

Duplex Transmission. Data transmission over a data circuit in both directions at the same time.

E/ME/A. Europe, Middle East, Asia.

Half-Duplex Transmission. Data transmission in either direction, one way at a time, the choice of direction being controlled by the DTE.

modem. *(modulator-demodulator) A device that modulates and demodulates signals transmitted over data communication facilities.

Multiple Interactive Screen (MIS). A function which provides the capability of using a display as up to four co-resident interactive logical terminals.

multipoint network. In data communication, a configuration in which more than two terminal installations are connected.

nonswitched line. A connection established, without the use of switching facilities, for the use of two or more data stations. Contrast with *switched line.*

point-to-point network. In data communication, a connection established between only two data stations. The connection may include switching facilities.

PTT. Post, Telephone, and Telegraph (Administration).

remote. Pertaining to the attachment of devices to a central computer through a communication control unit. Contrast with *local.*

SDLC. Synchronous data link control.

SNA. (DPG) Systems network architecture.

SNBU. (DPG) switched network backup.

switched line. A mode of operating a data link in which a circuit or channel is established through switching facilities, as, for example, in a public switched network.

switched network backup (SNBU). A modem feature to provide switched-line backup for nonswitched telecommunication facilities.

Type A adapter. Control logic for attaching Category A devices to a 3274 control unit.

Type B adapter. Control logic for attaching Category B devices to a 3274 control unit.

CONTENTS

FIGURE		PAGE
P-1	FINAL ASSEMBLY 3274 (2 SHEETS)	P-2
P-2	GATE POWER ASSEMBLY	P-14
P-3	GATE ASSEMBLY	P-16
P-4	FAN PLENUM ASSEMBLY	P-18
P-4A	DUAL FAN ASSEMBLY	P-20
P-5	OPS PANEL ASSEMBLY	P-22
P-6	FILE ASSEMBLY 31SD AND 51TD	P-24
P-7	MOTOR, CAPACITOR AND ACTUATOR ASSEMBLY	P-26
P-8	DISKETTE GUIDE AND CLAMPING ASSEMBLY	P-28
P-9	CARRIAGE AND PULLEY ASSEMBLY	P-30
P-10	SPINDLE AND PULLEY ASSEMBLY	P-32
P-11	CHASSIS ASSEMBLY	P-34
P-12	CABLE ASSEMBLIES WITH COMPONENT PARTS (3 SHEETS)	P-36
	NUMERICAL INDEX	P-X-1

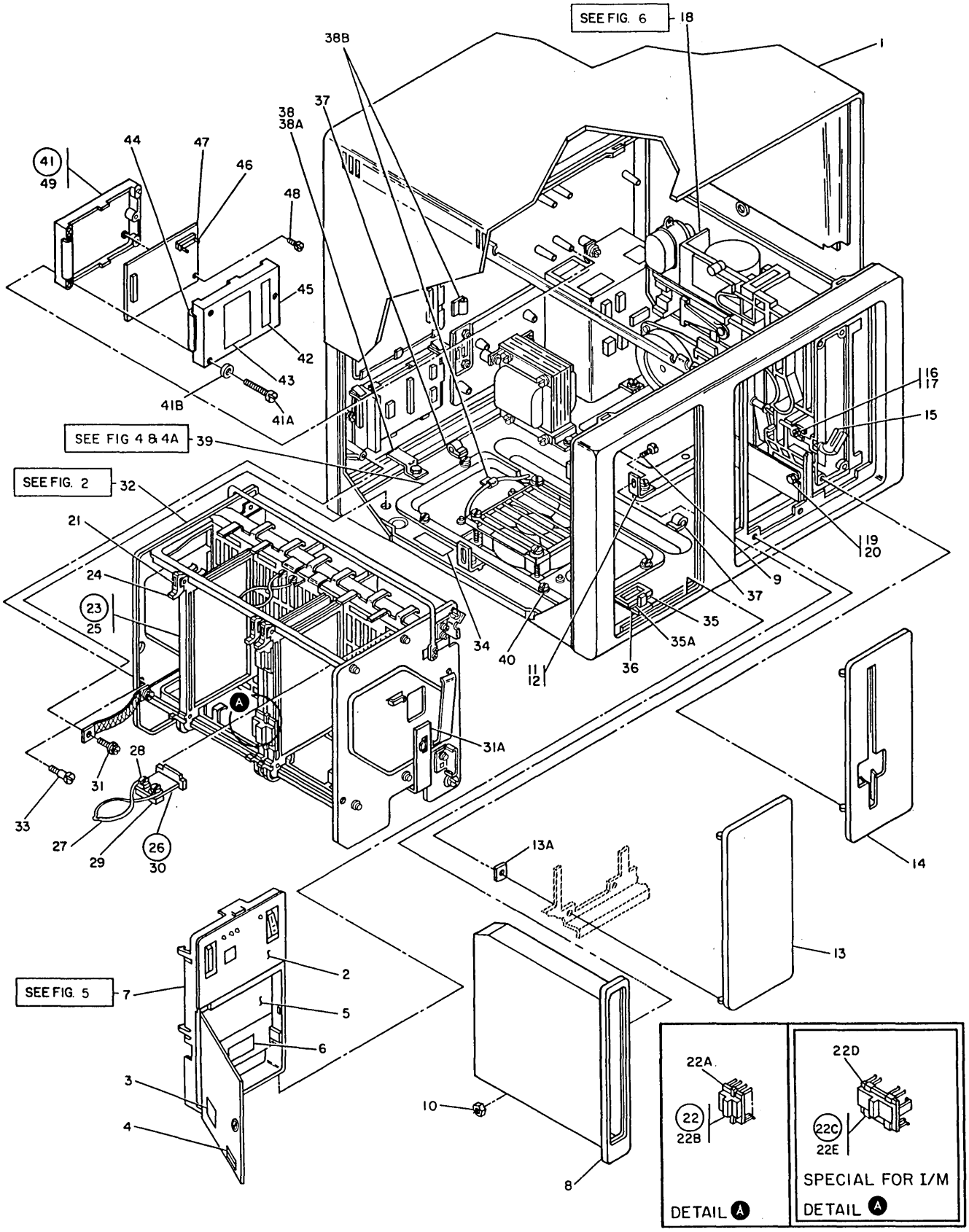

FIGURE P-1. FINAL ASSEMBLY 3274 (SHEET 1 OF 2, INDEX NOS. 1–49)

LIST P-1. FINAL ASSEMBLY 3274 (SHEET 1 OF 6)

FIGURE-INDEX NUMBER	PART NUMBER	UNITS PER ASM.	DESCRIPTION 1 2 3 4
1 -	5267800 NP	REF	FINAL ASM 3274
			FOR ILLUSTRATION SEE FIGURE 1
- 1	5267814	REF	. COVER ASM
- 2	5699190	1	. LABEL- OPS PNL,DDSA/X21- ENGLISH
- 2	5699191	1	. LABEL- OPS PNL,38LS S OR L SNBU-ENGLISH
- 2	5699192	1	. LABEL- OPS PNL,L- ENGLISH I/M
- 2	5699194	1	. LABEL- OPS PNL,R LOOP- ENGLISH
- 2	5699196	1	. LABEL- OPS PNL,DDSA/X21 FRENCH
- 2	5699197	1	. LABEL- OPS PNL,38LS S OR L SNBU-FRENCH
- 2	5699198	1	. LABEL- OPS PNL,L- FRENCH I/M
- 2	5699200	1	. LABEL- OPS PNL,R LOOP- FRENCH
- 2	5699202	1	. LABEL- OPS PNL,DDSA/X21 FRENCH/CANADIAN
- 2	5699203	1	. LABEL- OPS PNL,38LS S OR L SNBU FR/CDN
- 2	5699204	1	. LABEL- OPS PNL,L- FRENCH CANADIAN IM
- 2	5699206	1	. LABEL- OPS PNL,R LOOP- FRENCH/CANADIAN
- 2	5699208	1	. LABEL- OPS PNL,DDSA/X21 GERMAN
- 2	5699209	1	. LABEL- OPS PNL,38LS S OR L SNBU- GERMAN
- 2	5699210	1	. LABEL- OPS PNL,L- GERMAN I/M
- 2	5699211	1	. LABEL- OPS PNL,S OR L/SNBU- GERMAN I/M
- 2	5699212	1	. LABEL- OPS PNL,R LOOP- GERMAN
- 2	5699214	1	. LABEL- OPS PNL,DDSA/X21 ITALIAN
- 2	5699215	1	. LABEL- OPS PNL,38LS S OR L SNBU- ITALIAN
- 2	5699216	1	. LABEL- OPS PNL,L- ITALIAN I/M
- 2	5699218	1	. LABEL- OPS PNL,R LOOP- ITALIAN
- 2	5699226	1	. LABEL- OPS PNL,DDSA/X21 BRAZILIAN/PORT
- 2	5699227	1	. LABEL- OPS PNL,38LS S OR L SNBU BRZ/PORT
- 2	5699228	1	. LABEL- OPS PNL,L- BRAZILIAN PORT I/M
- 2	5699230	1	. LABEL- OPS PNL,R LOOP- BRAZILIAN/PORT
- 2	5699220	1	. LABEL- OPS PNL,DDSA/X21- JAPANESE
- 2	5699221	1	. LABEL- OPS PNL,38LS S OR L SNBU JAPANESE
- 2	5699222	1	. LABEL- OPS PNL,L- JAPANESE I/M
- 2	5699223	1	. LABEL- OPS PNL, S OR L/SNBU- JAPAN I/M
- 2	5699224	1	. LABEL- OPS PNL,R LOOP- JAPANESE
- 2	5699232	1	. LABEL- OPS PNL,DDSA/X21 SPANISH
- 2	5699233	1	. LABEL- OPS PNL,38LS S OR L SNBU- SPANISH
- 2	5699234	1	. LABEL- OPS PNL, L- SPANISH I/M
- 2	5699236	1	. LABEL- OPS PNL,R LOOP- SPANISH
- 3	5267871	1	. NAMEPLATE- 3274 51C
- 3	5267873	1	. NAMEPLATE- 3274 52C
- 4	5718217	1	. LABEL,WRITE-IN
- 5	5699238	1	. LABEL- OPS PNL,BLANK
- 5	5699239	1	. LABEL- OPS PNL,EMI- ENGLISH
- 5	5699240	1	. LABEL- OPS PNL,38LS S OR L/SNBU- ENGLISH
- 5	5699241	1	. LABEL- OPS PNL, L- ENGLISH I/M
- 5	5699242	1	. LABEL- OPS PNL,R LOOP- ENGLISH
- 5	5699245	1	. LABEL- OPS PNL,EMI- FRENCH
- 5	5699247	1	. LABEL- OPS PNL, L- FRENCH I/M
- 5	5699248	1	. LABEL- OPS PNL,R LOOP- FRENCH
- 5	5699251	1	. LABEL- OPS PNL,EMI- FRENCH/CANADIAN
- 5	5699252	1	. LABEL- OPS PNL,38LS S OR L/SNBU- FR/CDN
- 5	5699253	1	. LABEL- OPS PNL, L- FRENCH/CANADIAN I/M
- 5	5699254	1	. LABEL- OPS PNL,R LOOP- FRENCH/CANADIAN
- 5	5699257	1	. LABEL- OPS PNL,EMI- GERMAN
- 5	5699259	1	. LABEL- OPS PNL, L- GERMAN I/M
- 5	5699260	1	. LABEL- OPS PNL,R LOOP- GERMAN
- 5	5699263	1	. LABEL- OPS PNL,EMI- ITALIAN
- 5	5699265	1	. LABEL- OPS PNL, L- ITALIAN I/M
- 5	5699266	1	. LABEL- OPS PNL,R LOOP- ITALIAN
- 5	5699246	1	. LABEL- OPS PNL,38LS S OR L/SNBU- FRENCH
- 5	5699258	1	. LABEL- OPS PNL,38LS S OR L/SNBU- GERMAN
- 5	5699264	1	. LABEL- OPS PNL,38LS S OR L/SNBU- ITALIAN
- 5	5699269	1	. LABEL- OPS PNL,EMI- JAPANESE
- 5	5699270	1	. LABEL- OPS PNL,38LS S OR L/SNBU JAPANESE
- 5	5699271	1	. LABEL- OPS PNL, L- JAPANESE I/M
- 5	5699272	1	. LABEL- OPS PNL,R LOOP- JAPANESE
- 5	5699276	1	. LABEL- OPS PNL,38LS S OR L/SNBU BRZ/PORT
- 5	5699282	1	. LABEL- OPS PNL,38LS S OR L/SNBU- SPANISH
- 5	5699275	1	. LABEL- OPS PNL,EMI- BRAZILIAN/PORTUGESE
- 5	5699277	1	. LABEL- OPS PNL, L- BRAZILIAN/PORT IM
- 5	5699278	1	. LABEL- OPS PNL,R LOOP- BRAZILIAN/PORT
- 5	5699281	1	. LABEL- OPS PNL,EMI- SPANISH
- 5	5699283	1	. LABEL- OPS PNL, L- SPANISH I/M
- 5	5699284	1	. LABEL- OPS PNL,R LOOP- SPANISH
- 6	6815211	1	. LABEL, BAT. DISP. - ENGLISH
- 6	6815262	1	. LABEL, BAT. DISP. - FRENCH CANADIAN
- 6	6815210	1	. LABEL, BAT. DISP. - FRANCE
- 6	6815266	1	. LABEL, BAT. DISP. - GERMAN

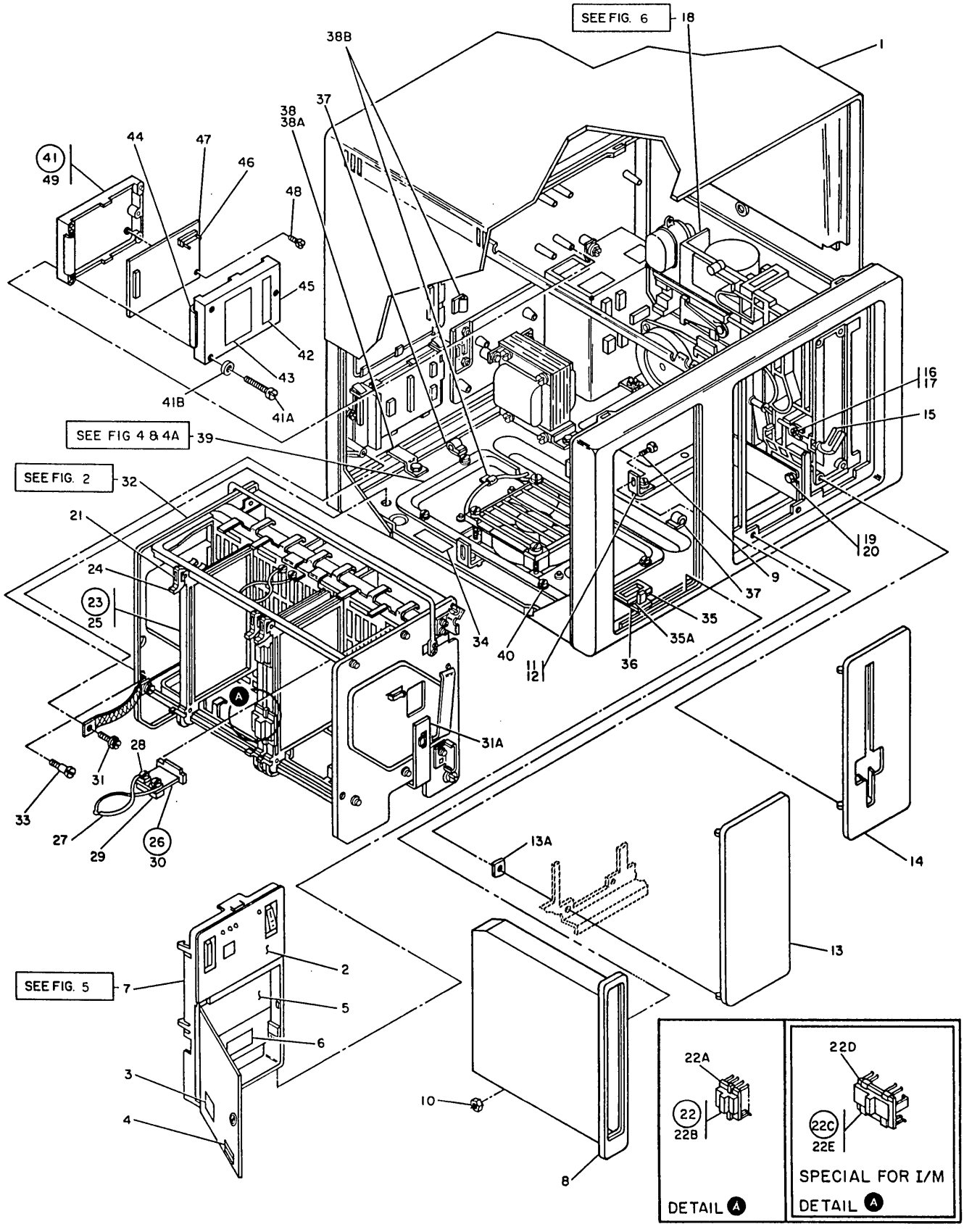

FIGURE P-1. FINAL ASSEMBLY 3274 (SHEET 1 OF 2, INDEX NOS. 1–49)

LIST P-1. FINAL ASSEMBLY 3274 (SHEET 2 OF 6)

FIGURE-INDEX NUMBER	PART NUMBER		UNITS PER ASM.	DESCRIPTION 1 2 3 4	
1 - 6	6815265		1	. LABEL, BAT. DISP. - ITALIAN	
- 6	6815263		1	. LABEL, BAT. DISP. - SPANISH	
- 6	6815209		1	. LABEL, BAT. DISP. - PORTUGAL	
- 6	4423216		1	. LABEL- BATTERY JAPANESE	
- 7	5267803	NP	1	. PANEL ASM FOR DETAIL BREAKDOWN , SEE FIGURE 5	
- 8	5267832		1	. POCKET- DOCUMENTATION	
- 9	1621061		1	. SCREW,SLOTTED CHEESE HD- M4 X 10 LG	ATT PT
- 10	1622403		1	. NUT,HEX	ATT PT
- 11	5267849		1	. BRACKET- POCKET MTG	
- 12	7362385		1	. SCREW- THD FORMING INDT HEX HD M4 X 8 LG	ATT PT
- 13	5267831		1	. BEZEL- BLANK	
- 13A	5267940		2	. CLIP	ATT PT
- 14	5267830		1	. BEZEL- DECORATIVE	
- 15	4177829		1	. HANDLE	
- 16	1621182		1	. SCREW,MACH PAN HD- M3 X 8 LG	ATT PT
- 17	1622402		1	. NUT,HEX-M3.5 X 6 FLW X 2.8 THK	ATT PT
- 18	4240504		1	. FILE ASM 31SD, 100-110V 50 HZ	
- 18	4240512		1	. FILE ASM 51TD, 100-110V 50 HZ	
- 18	4240505		1	. FILE ASM 31SD, 200-240V 50 HZ	
- 18	4240513		1	. FILE ASM 51TD, 200-240V 50 HZ	
- 18	4240508		1	. FILE ASM 31SD, 100-120V 60 HZ	
- 18	4240516		1	. FILE ASM 51TD, 100-127V 60 HZ	
- 18	4240509		1	. FILE ASM 31SD, 200-240V 60 HZ	
- 18	4240517		1	. FILE ASM 51TD, 200-240V 60 HZ FOR DETAIL BREAKDOWN,SEE FIGURE 6	
- 19	4796654		4	. SCREW- HEX WSHR HD M4 X 12LG	ATT PT
- 20	1622334		4	. WASHER,LOCK INT STAR M4- 8 OD X 0.5 THK	ATT PT
- 21	818579		1	. MARKER STRIP- CARD IDENT	
- 22	1794410		AR	. ASM- CROSSOVER CONNECTOR	
- 22A	1794411		1	. . CARD	
- 22B	1794412		1	. . HOLDER, 2 POSITION	
- 22C	5267787		AR	. ASM- CROSSOVER CONNECTOR SPECIAL FOR I/M	
- 22D	5267785		1	. . CARD	
- 22E	4134830		1	. . HOLDER, 3 POSITION	
- 23	1743141		AR	. HOLDER ASM, CARD 2 X 2 WIDE 3 HI TCC	
- 23	1743142		AR	. HOLDER ASM, CARD 4 WIDE 3 HI TCC	
- 23	1743143		AR	. HOLDER ASM, CARD 2 X 2 WIDE 3 HI	
- 23	1743144		AR	. HOLDER ASM,4W W/O TCC	
- 24	1743149		2	. . EAR,LOCKING	
- 25	1743145		1	. . CARD HOLDER- 2-2 WIDE, 3 HIGH W/TCC	
- 25	1743146		1	. . CARD HOLDER- 4 WIDE, 3 HIGH W/TCC	
- 25	1743147		1	. . CARD HOLDER- 2-2 WIDE, 3 HIGH	
- 25	1743148		1	. . CARD HOLDER- 4 WIDE, 3 HIGH	
- 26	5667093		1	. CARD ASM- HPCA/LHA/SLHA	
- 26	5667094		1	. CARD ASM- CCA/LCA	
- 27	5717466		1	. . CARD RETAINER	
- 28	244049		2	. . SCREW,TAPPING,THD CUTTING 4-40 X 5/16 LG	ATT PT
- 29	5717486		1	. . STRAIN RELIEF	
- 30	5667043		1	. . CARD ASM	
- 30	5667044		1	. . CARD ASM USED ON CCA/LCA ONLY	
- 31	7362385		1	. SCREW- THD FORMING INDT HEX HD M4 X 8 LG	
- 31A	5267984		1	. SHIELD,KEYSWITCH	
- 32	5699454	NP	1	. GATE/POWER ASM-LOW WATTAGE /ANR-1TSR/	
- 32	5699455	NP	1	. GATE/POWER ASM-HI WATTAGE /ANR-2TSR/	
- 32	5699634	NP	1	. GATE/POWER ASM-LOW WATTAGE,KANJI 1TSR	
- 32	5699635	NP	1	. GATE/POWER ASM-HI WATTAGE, KANJI 2TSR	
- 32	5699456	NP	1	. GATE/POWER ASM-IM W/CRYPTO 2TSR FOR DETAIL BREAKDOWN , SEE FIGURE 2	
- 33	5267842		2	. SCREW- SHOULDER M5	
- 34	369207		1	. LABEL,VOLTAGE	
- 34	1743548		1	. LABEL,CANADA/FRENCH	
- 34	6815182		1	. LABEL,HAZARDOUS ZONE-FRENCH	
- 34	6815193		1	. LABEL,HAZARDOUS ZONE-GERMAN	
- 34	6815180		1	. LABEL,HAZARDOUS ZONE-SPANISH	
- 34	6815181		1	. LABEL,HAZARDOUS ZONE-ITALIAN	
- 34	6815183		1	. LABEL,HAZARDOUS ZONE-PORTUGUESE	
- 34	8326797		1	. LABEL- WARNING JAPAN	
- 34	5685244		1	. LABEL- HAZARDOUS ZONE- BELGIAN	
- 34	8326801		1	. LABEL- HAZARDOUS ZONE- FINNISH	
- 34	4423212		1	. LABEL- HAZARDOUS ZONE- NORWEGIAN	
- 34	8551904		1	. LABEL- HAZARDOUS ZONE- SWEDISH	
- 35	2565254		1	. RETAINER	
- 35A	5267935		1	. PAD,RUBBER	
- 36	2565252		1	. GUIDE	
- 37	2596293		4	. CABLE CLAMP	

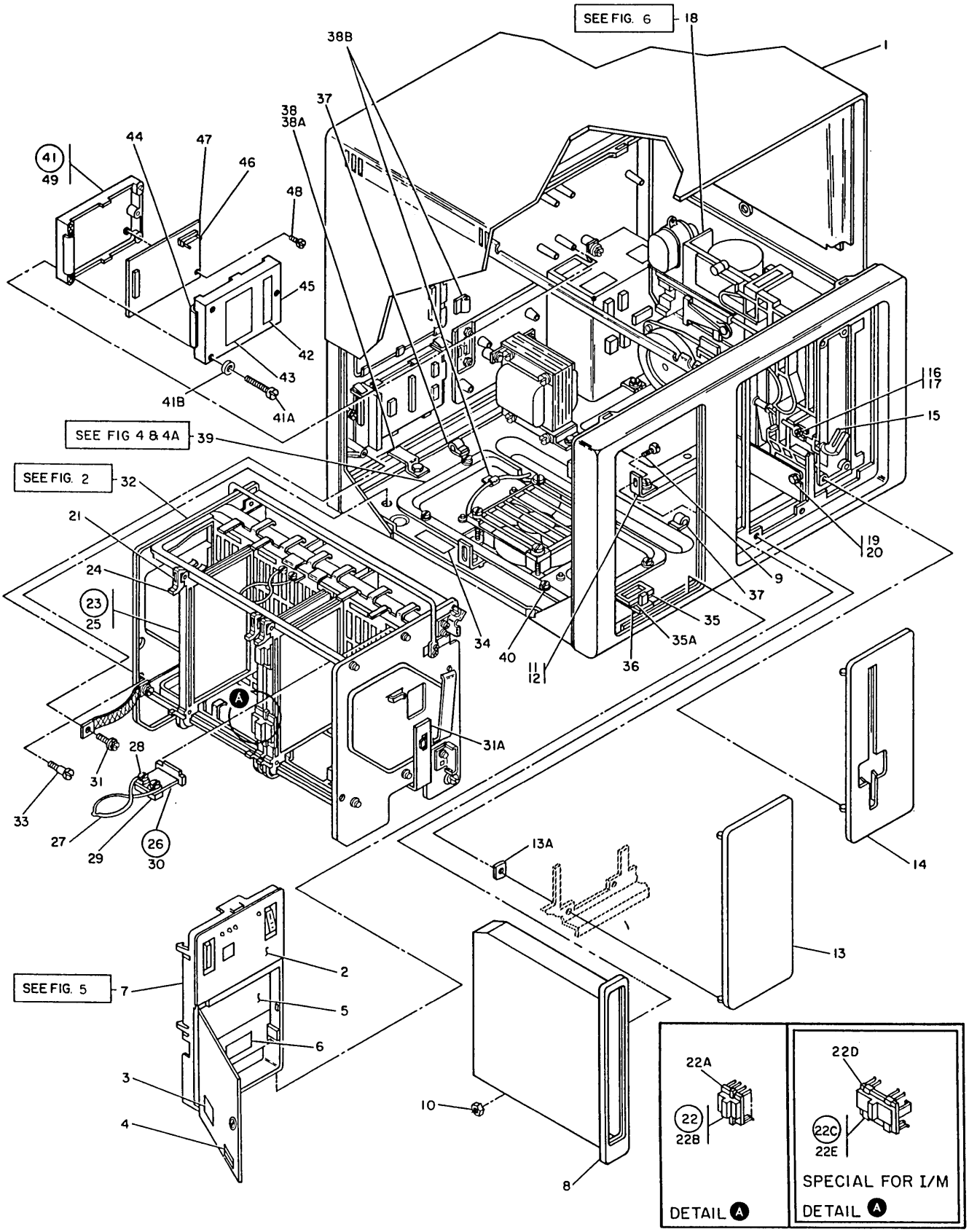

FIGURE P-1. FINAL ASSEMBLY 3274 (SHEET 1 OF 2, INDEX NOS. 1–49)

LIST P-1. FINAL ASSEMBLY 3274 (SHEET 3 OF 6)

FIGURE-INDEX NUMBER	PART NUMBER	UNITS PER ASM.	DESCRIPTION 1 2 3 4
1 - 38	5267936	1	. CLAMP,CABLE
- 38A	7362385	1	. SCREW- THD FORMING INDT HEX HD M4 X 8 LG ATT PT
- 38B	4423063	1	. RETAINER
			USA/CANADA
- 39	5267846	1	. FAN PLENUM ASM,200-240V 50/60 HZ WTC
- 39	5267979	1	. FAN PLENUM ASM,100-127V 50/60 HZ WTC
			FOR DETAIL BREAKDOWN, SEE FIGURE 4
- 39	5699504	1	. DUAL FAN ASM, 120V 60 HZ USA/CANADA
- 39	5699505	1	. DUAL FAN ASM, 100V 50/60 HZ WT
- 39	5699506	1	. DUAL FAN ASM, 200V 50/60 HZ WT
			FOR DETAIL BREAKDOWN, SEE FIGURE 4A
- 40	7362385	4	. SCREW- THD FORMING INDT HEX HD M4 X 8 LG ATT PT
- 41	2682397	1	. PSN ASM
			USED ON WTC ONLY
- 41A	1621178	3	. SCREW,PAN HD-M3 X 4LG ATT PT
- 41B	1622302	3	. WASHER,FLAT M3- 50D X 0.5 THK ATT PT
- 42	737858	1	. . LABEL,WARNING
- 43	1734231	1	. . LABEL
- 44	2600562	2	. . SEAL
- 45	1730504	1	. . COVER
- 46	1730905	2	. . PIN
- 47	2682396	1	. . CARD ASM
- 48	67873	2	. . SCREW,PAN HD SELF TAPPING- 4-40 X 3/16 ATT PT
- 49	1730504	2	. . COVER

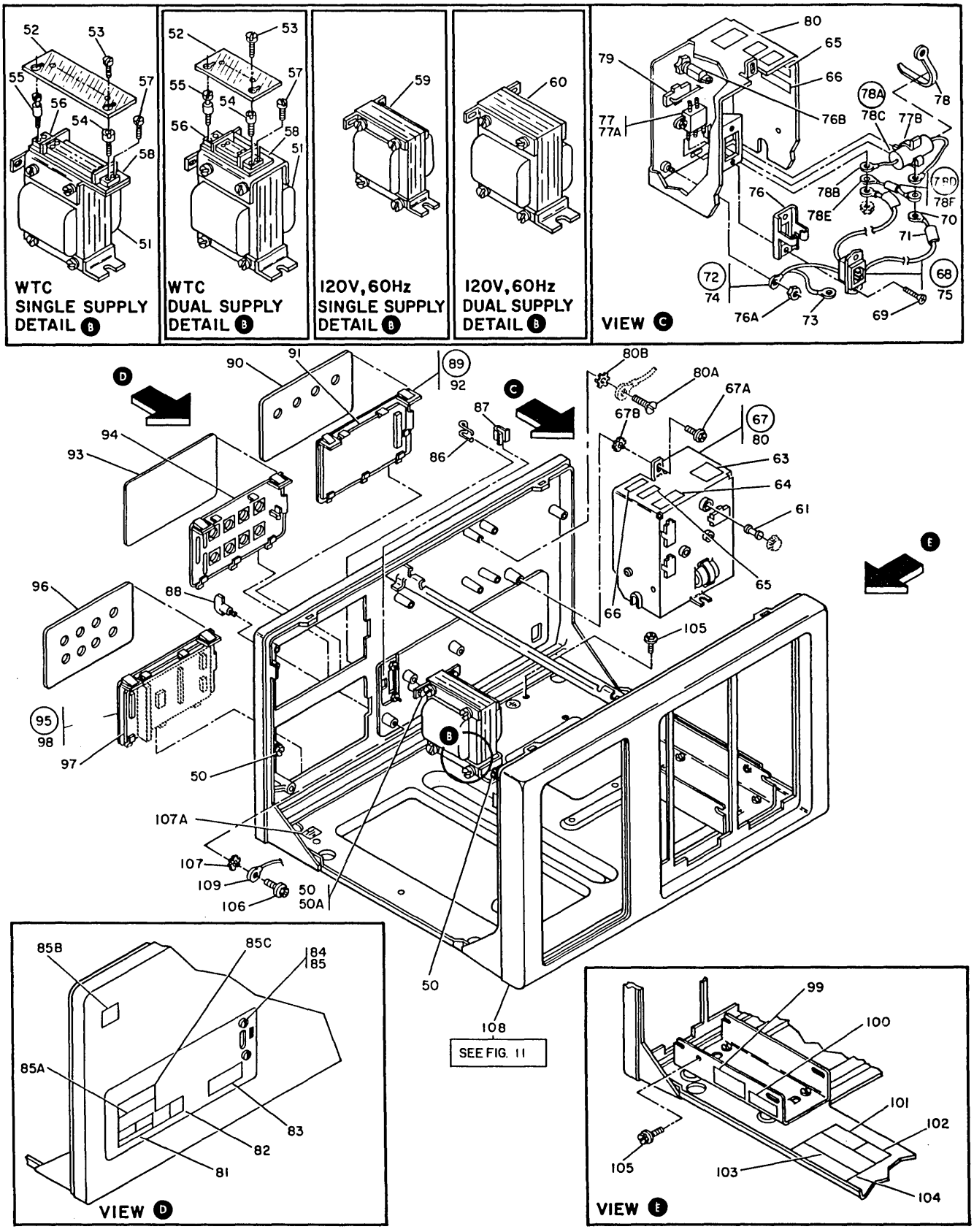

FIGURE P-1. FINAL ASSEMBLY 3274 (SHEET 2 OF 2, INDEX NOS. 50–109)

LIST P-1. FINAL ASSEMBLY 3274 (SHEET 4 OF 6)

FIGURE-INDEX NUMBER	PART NUMBER	UNITS PER ASM.	DESCRIPTION 1 2 3 4	
1 - 50	2549782	4	. SCREW- THD FORMING,HEX WASHER HEAD	
- 50A	1622347	2	. WASHER,LOCK EXT STAR M5- 10 OD X 0.6 THK	
- 51	1828817	1	. TRANSFORMER- BULK XFMR 50/60 HZ USED ON DUAL SUPPLY, WTC ONLY	
- 51	1828818	1	. TRANSFORMER- BULK XFMR 50/60 HZ USED ON SINGLE SUPPLY, WTC ONLY	
- 51	1828819	1	. TRANSFORMER- BULK 50/60 HZ USED ON DUAL SUPPLY, WTC ONLY	
- 52	5827470	1	. . SHIELD- SHORT	
- 52	361537	1	. . SHIELD- LONG USED ON SINGLE SUPPLY, WTC ONLY	
- 53	10470	1	. . SCREW,MACH-BIND HD 6-32 X 1/4 LG	ATT PT
- 54	210883	1	. . STUD-SHIELD MTG,TAPPED,NO. 6-32	
- 55	210884	1	. . STUD-SHIELD MTG,NO. 6-32	
- 56	317232	1	. . TERMINAL BOARD- 6 DBL SCREW TERMINALS	
- 56	522850	1	. . TERMINAL BOARD-W/BARR 10DBL SCREW TERM USED ON SINGLE SUPPLY, WTC ONLY	
- 57	38354	2	. . SCREW,MACH-FIL H 6-32 X 1/2 LG	ATT PT
- 58	5261398	1	. . STRIP,MARKER	
- 58	522849	1	. . MARKER STRIP,TERMINAL USED ON SINGLE SUPPLY, WTC ONLY	
- 59	2625096	1	. TRANSFORMER- BULK 60HZ 120V SINGLE POWER	
- 60	2625097	1	. TRANSFORMER- BULK 60HZ 120V DUAL POWER	
- 61	512137	1	. FUSE- 5A SB 150V	
- 61	1149561	1	. FUSE- 2A SB 250V	
- 61	4885618	1	. FUSE- 3A SB-250V USA/CANADA	
- 61	5718367	1	. FUSE,CARTRIDGE- 3.0A 250V	
- 63	5267817	1	. LABEL- FUSE RATING 2 ASB/250V	
- 63	5267818	1	. LABEL- FUSE RATING 5 ASB/125V	
- 64	4942502	1	. LABEL,WARNING	
- 64	5718483	1	. LABEL- FUSE WARNING ENGLISH- CDN/FRENCH	
- 64	4406240	1	. LABEL- FUSE WARNING- FRENCH	
- 64	4406241	1	. LABEL- FUSE WARNING- GERMAN	
- 64	4406242	1	. LABEL- FUSE WARNING- SPANISH	
- 64	4406243	1	. LABEL- FUSE WARNING- ITALIAN	
- 64	4406244	1	. LABEL- FUSE WARNING- JAPANESE	
- 64	4406245	1	. LABEL- FUSE WARNING- PORTUGUESE	
- 64	8329451	1	. LABEL- FUSE WARNING- BELGIAN	
- 64	6825826	1	. LABEL- FUSE WARNING- FINNISH	
- 64	8551901	1	. LABEL- FUSE WARNING- SWEDISH	
- 65	138754	2	. LABEL- VOLTAGE PRESENT ENGLISH	
- 65	6812828	2	. LABEL- VOLTAGE PRESENT FRENCH	
- 65	6812829	2	. LABEL- VOLTAGE PRESENT SPANISH	
- 65	6812830	2	. LABEL- VOLTAGE PRESENT ITALIAN	
- 65	6812832	2	. LABEL- VOLTAGE PRESENT GERMAN	
- 65	6815188	2	. LABEL- VOLTAGE, PORTUGUESE	
- 65	6825840	2	. LABEL- VOLTAGE JAPANESE	
- 65	4420467	2	. LABEL- VOLTAGE PRESENT BELGIAN	
- 65	6825818	2	. LABEL- VOLTAGE PRESENT FINNISH	
- 65	4418722	2	. LABEL- VOLTAGE PRESENT NORWEGIAN	
- 65	8551903	2	. LABEL- VOLTAGE PRESENT SWEDISH	
- 66	6812831	2	. LABEL,LINE VOLTAGE-CANADIAN FRENCH	
- 67	5267836	1	. PRI POWER ASM- 120V 60HZ DOMESTIC USED ON USA AND CANADA ONLY	
- 67	5267861	1	. PRI POWER ASM- 100-240V 50/60HZ USED ON WTC ONLY	
- 67A	2549782	2	. SCREW- THD FORMING,HEX WASHER HEAD	ATT PT
- 67B	1622347	1	. WASHER,LOCK EXT STAR M5- 10 OD X 0.6 THK	ATT PT
- 68	5267945	1	. . RECEPTACLE ASM- PRI POWER BOX	
- 69	4236454	2	. . SCREW- THREAD FORMING, FL HD	ATT PT
- 70	483681	2	. . . TERMINAL,RING- NO. 8	
- 71	317296	1	. . . LABEL-NUMBERING L TO R 1 THRU 33	
- 72	5267862	1	. . . JUMPER ASM- P/P BOX GND	
- 73	483681	1	. . . TERMINAL,RING- NO. 8	
- 74	483682	1	. . . TERMINAL, RING - 14 TO 16 AWG	
- 75	6814345	1	. . . RECEPTACLE- POWER CEE STYLE	
- 76	5267944	1	. . RETAINER- POWER CORD	
- 76A	1622403	1	. . NUT- HEX M4	
- 76B	4201819	1	. . FUSEHOLDER	
- 77	1860965	1	. . FILTER- EMC,240V,5 AMP, 50/60HZ	
- 77A	1621181	2	. . SCREW,SLOTTED PAN HD- M3.5 X 6 LG	ATT PT
- 77B	1743455	1	. . CLIP- CAPACITOR	
- 78	524519	1	. . CLAMP USED ON WTC ONLY	
- 78A	5267946	1	. . CAPACITOR ASM- P/P BOX USED ON WTC ONLY	
- 78B	483680	2	. . . TERMINAL	

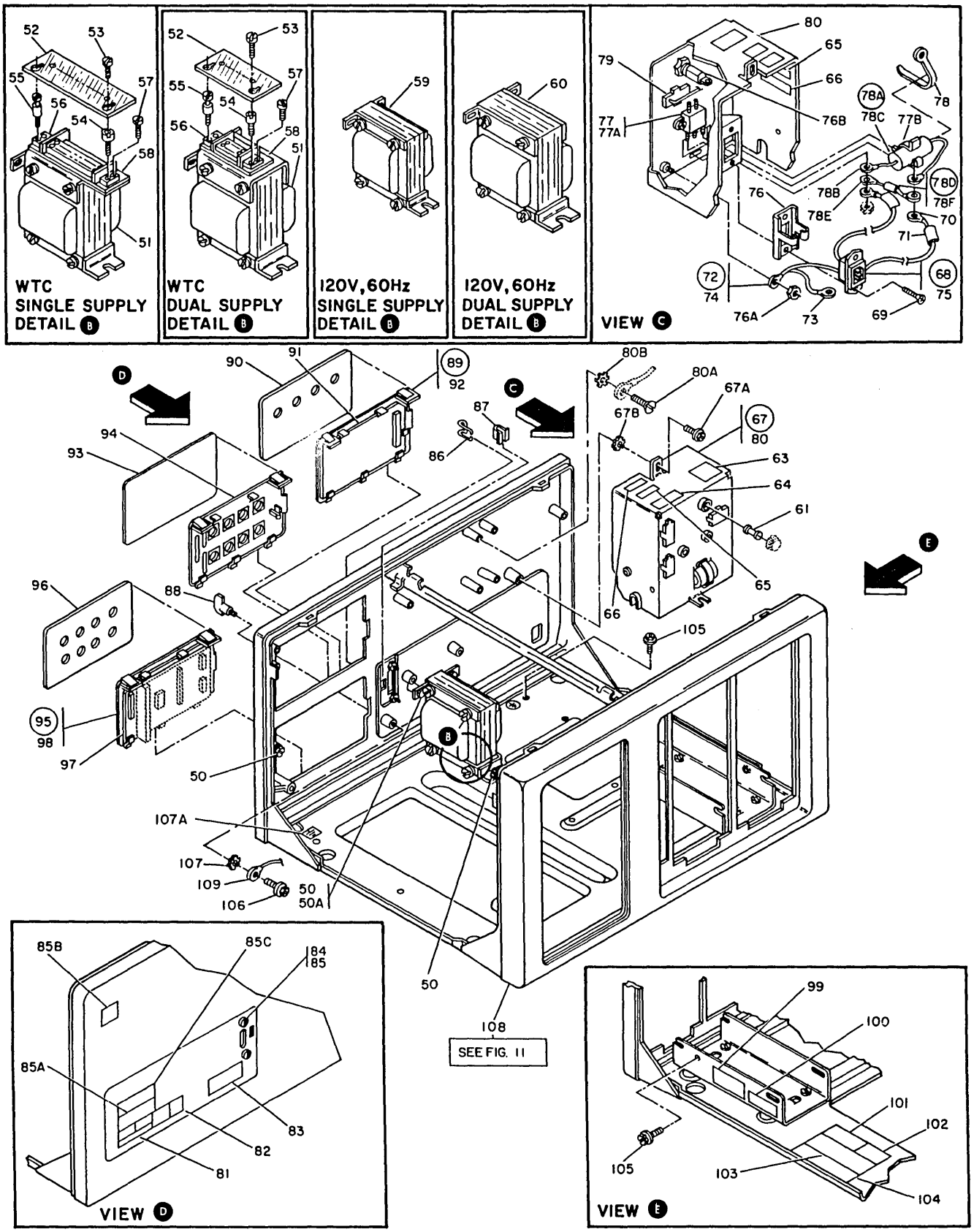

FIGURE P-1. FINAL ASSEMBLY 3274 (SHEET 2 OF 2, INDEX NOS. 50–109)

LIST P-1. FINAL ASSEMBLY 3274 (SHEET 5 OF 6)

FIGURE-INDEX NUMBER	PART NUMBER	UNITS PER ASM.	DESCRIPTION 1 2 3 4
1 - 78C	5616104	1	. . . CAPACITOR
- 78D	5267718	1	. . RESISTOR, 300K , 1W
- 78E	483681	2	. . . TERMINAL,RING- NO. 8
- 78F	132808	1	. . . RESISTOR,FXD,COMP- 300K , 1W, 5%
- 79	5267741	1	. . CABLE ASM-PRI/PWR BOX-W/T USED ON 50/60HZ WTC ONLY
- 79	5267740	1	. . CABLE ASM- PRI/PWR BOX USED ON 60HZ DOMESTIC ONLY
- 80	5267947		. . CHASSIS USED ON WTC ONLY
- 80	5267835	1	. . CHASSIS
- 80A	1621170	1	. SCREW,MACH PAN HD-M3 X 6 LG
- 80B	1622344	1	. WASHER,LOCK EXT STAR M3- 6 OD X 0.4 THK
- 81	5267881	1	. PLATE- SEE BM POWER 120V 60HZ USA
- 81	5267882	1	. PLATE- SEE BM POWER 120V 60HZ CANADA
- 81	5267883	1	. PLATE- SEE BM POWER 100V 50HZ A/FE
- 81	5267884	1	. PLATE- SEE BM POWER 110V 50HZ A/FE
- 81	5267885	1	. PLATE- SEE BM POWER 200V 50HZ A/FE
- 81	5267886	1	. PLATE- SEE BM POWER 220V 50HZ EMEA/AFE
- 81	5267887	1	. PLATE- SEE BM POWER 230V 50HZ A/FE
- 81	5267888	1	. PLATE- SEE BM POWER 240V 50HZ EMEA/AFE
- 81	5267889	1	. PLATE- SEE BM POWER 100V 60HZ A/FE
- 81	5267890	1	. PLATE- SEE BM POWER 110V 60HZ A/FE
- 81	5267891	1	. PLATE- SEE BM POWER 120V 60HZ EMEA/AFE
- 81	5267892	1	. PLATE- SEE BM POWER 127V 60HZ A/FE
- 81	5267893	1	. PLATE- SEE BM POWER 200V 60HZ A/FE
- 81	5267894	1	. PLATE- SEE BM POWER 208V 60HZ A/FE
- 81	5267895	1	. PLATE- SEE BM POWER 220V 60HZ A/FE
- 81	5267896	1	. PLATE- SEE BM POWER 240V 60HZ A/FE
- 82	855286	1	. LABEL, UL
- 82	960766	1	. LABEL, CSA
- 83	5267920	1	. LABEL- ENGLISH MODEM CABLE
- 83	5267921	1	. LABEL- ENG/CAN-FRENCH MODEM CABLE
- 83	5267922	1	. LABEL- FRENCH MODEM CABLE
- 83	5267923	1	. LABEL- GERMAN MODEM CABLE
- 83	5267924	1	. LABEL- SPANISH MODEM CABLE
- 83	5267925	1	. LABEL- ITALIAN MODEM CABLE
- 83	5267926	1	. LABEL- BRAZIL/PORT MODEM CABLE
- 83	5267927	1	. LABEL- JAPANESE MODEM CABLE
- 84	38264	2	. SCREW,MACH-FIL H 4-40 X 3/8 LG
- 85	37913	2	. NUT-HEX 4-40 X .250 ID
- 85A	855285	1	. NAMEPLATE
- 85A	8112301	1	. PLATE,TRADEMARK-GUATEMALA
- 85A	8112302	1	. PLATE,TRADEMARK-CHILE/MEXICO/PERU
- 85A	1743359	1	. LABEL,FCC
- 85A	6835762	1	. LABEL, MODEM LABEL WTC FRANCE ONLY
- 85A	2766967	1	. LABEL, MODEM LABEL WTC SWITZERLAND ONLY
- 85A	1743648	1	. LABEL, MODEM LABEL WTC AUSTRALIA ONLY
- 85A	5267970	1	. LABEL, MODEM LABEL WTC GERMANY ONLY
- 85A	6835647	1	. LABEL, MODEM LABEL WTC AUSTRIA ONLY
- 85B	5267872	1	. NAMEPLATE- 3274 51C
- 85B	5267874	1	. NAMEPLATE- 3274 52C
- 85C	8331675	1	. LABEL, MODEM APPROVAL WTC FRANCE ONLY (1981)
- 85C	8331676	1	. LABEL, MODEM APPROVAL WTC FRANCE ONLY (1982)
- 85C	8331677	1	. LABEL, MODEM APPROVAL WTC FRANCE ONLY (1983)
- 85C	8331678	1	. LABEL, MODEM APPROVAL WTC FRANCE ONLY (1984)
- 85C	8331679	1	. LABEL, MODEM APPROVAL WTC FRANCE ONLY (1985)
- 85C	8331680	1	. LABEL, MODEM APPROVAL WTC FRANCE ONLY (1986)
- 86	5718360	1	. BAIL
- 87	5267928	1	. CLIP
- 88	5267844	1	. WING STUD- M5
- 89	5267708	1	. I/O PANEL ASM
- 90	5267719	1	. . LABEL- I/O- B0-3
- 91	5267705	1	. . ASM ANR DEVICE ADAPTER CARD
- 92	5699514	1	. . PANEL- ADAPTER I/O
- 93	5267717	1	. LABEL- I/O BLANK
- 94	5699514	1	. PANEL- ADAPTER I/O
- 95	5267711	1	. I/O PANEL ASM
- 96	5267712	1	. . LABEL- I/O- A0-7
- 97	5267709	1	. . ASM DEVICE NDS ADAPTER CONN CARD
- 98	5699514	1	. . PANEL- ADAPTER I/O

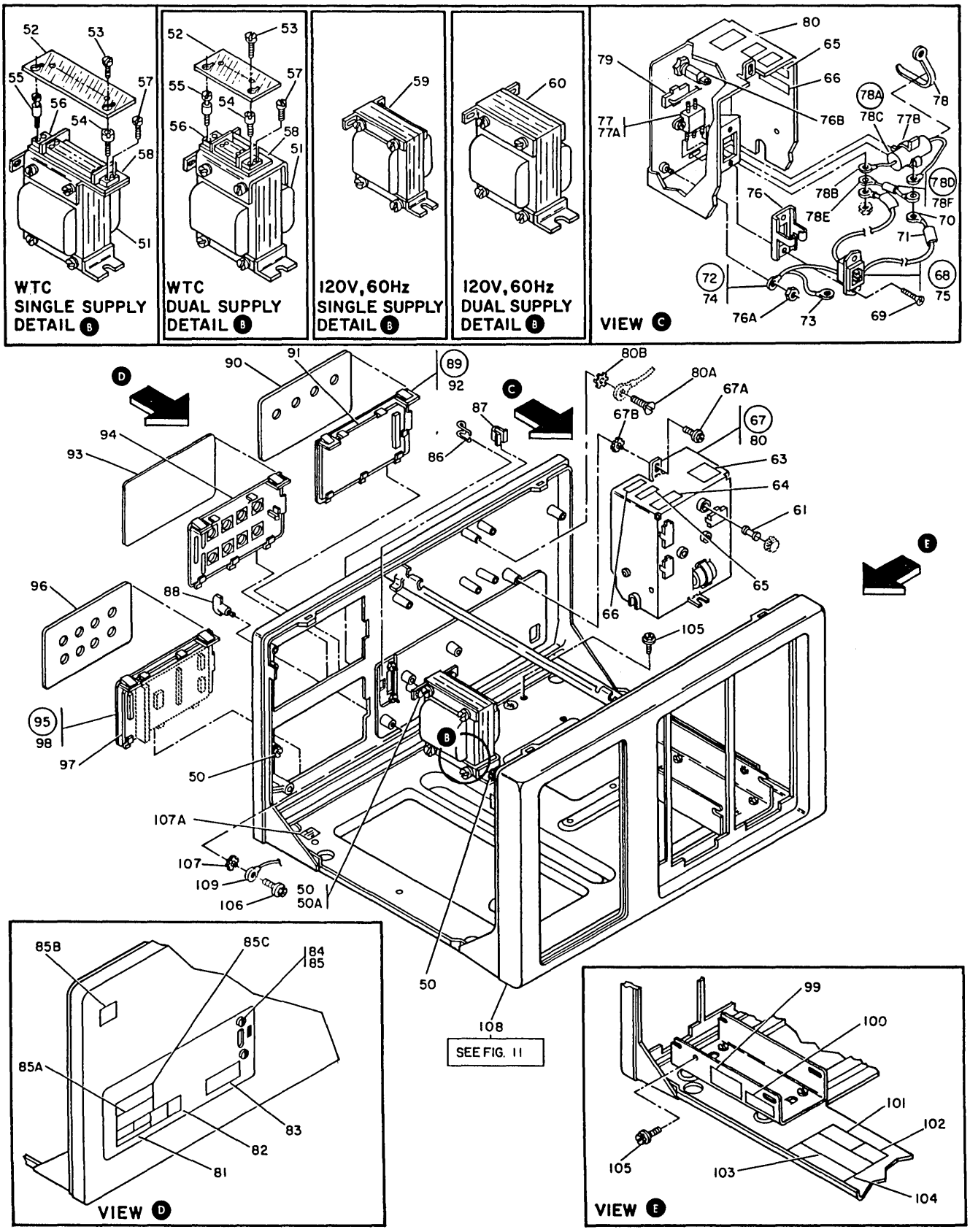

FIGURE P-1. FINAL ASSEMBLY 3274 (SHEET 2 OF 2, INDEX NOS. 50–109)

LIST P-1. FINAL ASSEMBLY 3274 (SHEET 6 OF 6)

FIGURE-INDEX NUMBER	PART NUMBER	UNITS PER ASM.	DESCRIPTION 1 2 3 4
1 - 99	369207	1	. LABEL,VOLTAGE
- 99	1743548	1	. LABEL
- 99	6815182	1	. LABEL,HAZARDOUS ZONE-FRENCH
- 99	6815180	1	. LABEL,HAZARDOUS ZONE-SPANISH
- 99	6815181	1	. LABEL,HAZARDOUS ZONE-ITALIAN
- 99	6815183	1	. LABEL,HAZARDOUS ZONE-PORTUGUESE
- 99	8326797	1	. LABEL- WARNING JAPAN
- 99	5685244	1	. LABEL- HAZARDOUS ZONE- BELGIAN
- 99	8326801	1	. LABEL- HAZARDOUS ZONE- FINNISH
- 99	4423212	1	. LABEL- HAZARDOUS ZONE- NORWEGIAN
- 99	8551904	1	. LABEL- HAZARDOUS ZONE- SWEDISH
-100	5718343	1	. LABEL-SAFETY
-100	5718477	1	. LABEL,SAFETY-CANADIAN FRENCH
-100	5718478	1	. LABEL,SAFETY-FRENCH
-100	5718479	1	. LABEL,SAFETY-GERMAN
-100	5718481	1	. LABEL,SAFETY-SPANISH
-100	5718480	1	. LABEL,SAFETY-ITALIAN
-100	5718482	1	. LABEL,SAFETY-PORTUGUESE
-100	5267983	1	. LABEL,SAFETY-JAPANESE
-101	855282	1	. PLATE- SERIAL NO. LEFT
-102	855283	1	. PLATE- SERIAL NO. RIGHT
-103	855284	1	. PLATE- MANUFACTURING EXPORT
-103	8112300	1	. PLATE,MANUFACTURING-U.K. EXPORT
-104	855262	1	. PLATE- PROPERTY OF IBM
-104	855263	1	. PLATE- PROPERTY OF IBM WT
-104	960746	1	. PLATE,PROP OF IBM CANADA
-104	855264	1	. PLATE- MANUFACTURED BY USA
-104	855265	1	. PLATE- MANUFACTURED BY
-104	855266	1	. PLATE- MANUFACTURED BY WT
-104	855267	1	. PLATE- MANUFACTURED FOR USA
-104	855268	1	. PLATE- MANUFACTURED FOR
-104	855269	1	. PLATE- MANUFACTURED FOR WT
-104	855270	1	. PLATE- RECONDITIONED BY USA
-104	855272	1	. PLATE- RECONDITIONED BY WT
-104	855273	1	. PLATE- RENOVATED BY USA
-104	855275	1	. PLATE- RENOVATED BY WT
-104	855276	1	. PLATE- RECONDITIONED FOR USA
-104	855278	1	. PLATE- RECONDITIONED FOR WT
-104	855279	1	. PLATE- RENOVATED FOR USA
-104	855281	1	. PLATE- RENOVATED FOR WT
-105	7362385	2	. SCREW- THD FORMING INDT HEX HD M4 X 8 LG
-106	1673983	1	. SCREW,PAN HD-M5 X 6 LG-BLUE ZINC PLATED
-107	1622347	1	. WASHER,LOCK EXT STAR M5- 10 OD X 0.6 THK
-107A	5865679	2	. LABEL, GND
-108	5267810	1	. CHASSIS ASM FOR DETAIL BREAKDOWN , SEE FIGURE 11
-109	5267733	1	. CABLE ASM- FAN AC USA/CANADA FOR COMPONENT PARTS SEE FIGURE 12

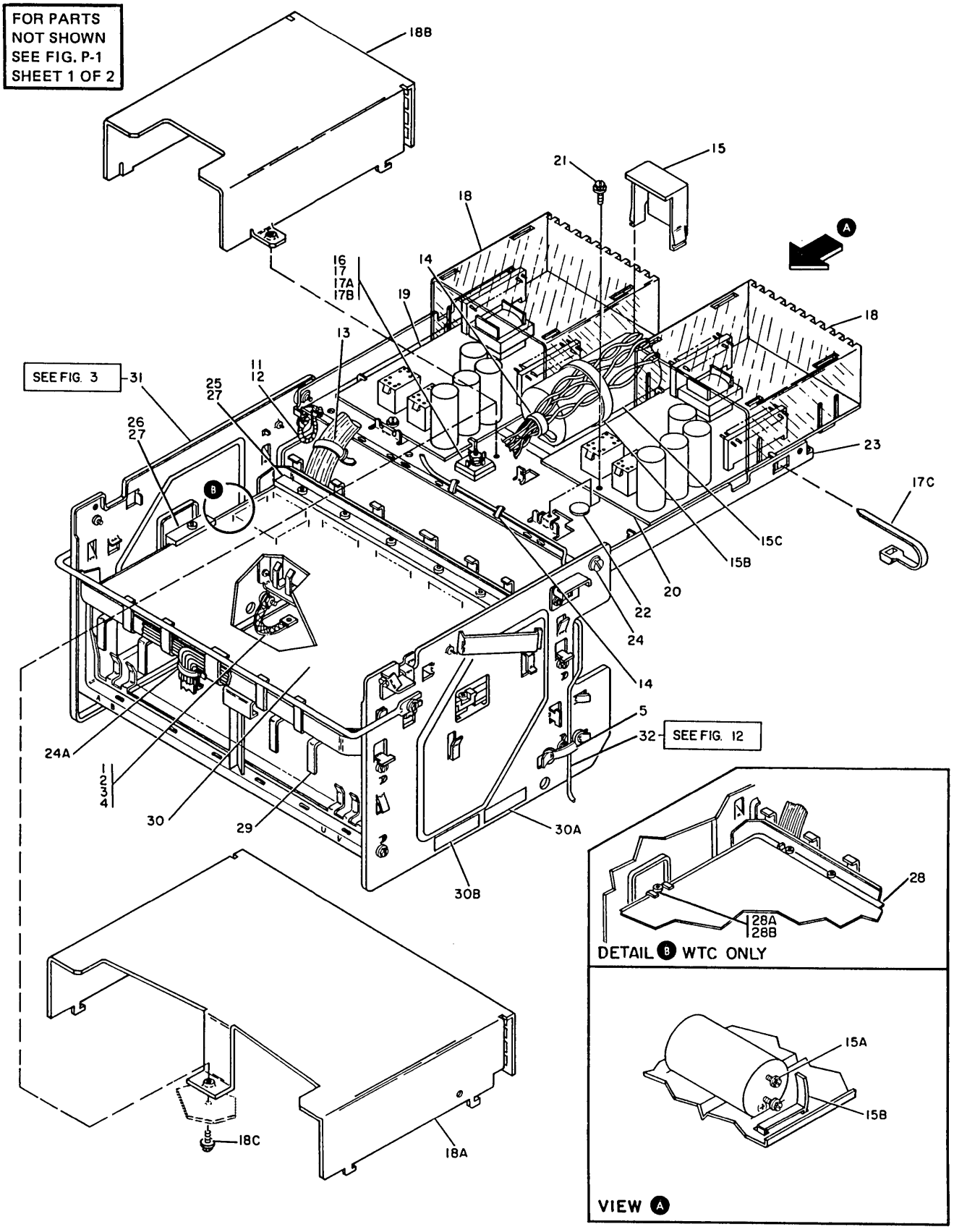

FIGURE P-2. GATE/POWER ASSEMBLY

LIST P-2. GATE/POWER ASSEMBLY

FIGURE-INDEX NUMBER	PART NUMBER	UNITS PER ASM.	DESCRIPTION 1 2 3 4
2 -	5699454 NP	REF	GATE/POWER ASM-LOW WATTAGE /ANR-1TSR/
-	5699455 NP	REF	GATE/POWER ASM-HI WATTAGE /ANR-2TSR/
-	5699634 NP	REF	GATE/POWER ASM-LOW WATTAGE,KANJI 1TSR
-	5699635 NP	REF	GATE/POWER ASM-HI WATTAGE, KANJI 2TSR
-	5699456 NP	REF	GATE/POWER ASM-IM W/CRYPTO 2TSR
			FOR NEXT HIGHER ASM , SEE FIGURE 1-32
			FOR ILLUSTRATION SEE FIGURE 2
- 1	5267931	1	. JUMPER ASM
- 2	1622403	1	. NUT- HEX M4 ATT PT
- 3	1622346	1	. WASHER- LOCK M4 ATT PT
- 4	1622304	1	. WASHER- FLAT 9 OD X .8 THK ATT PT
- 5	811427	AR	. STRAP,CABLE
- 11	5267930	1	. JUMPER ASM
- 12	7362385	2	. SCREW- THD FORMING INDT HEX HD M4 X 8 LG ATT PT
- 13	760221	AR	. TIE,CABLE
- 14	5420242	5	. TY-MINIATURE
- 15	5267837	1	. SHIELD- CAPACITOR
- 15A	1743126	2	. SCREW
- 15B	5267957	2	. TIE- CABLE
- 15C	4430074	1	. CAPACITOR- ELECTROLYTIC ALUM,POLAR, CAN
- 16	4429941	1	. BRIDGE RECTIFIER- FULL WAVE
- 17	1622403	1	. NUT- HEX M4 ATT PT
- 17A	1622318	1	. WASHER,LOCK SPLIT M3- 6.2 OD X 0.8 THK ATT PT
- 17B	1622304	1	. WASHER- FLAT 9 OD X .8 THK ATT PT
- 17C	5267957	2	. TIE,CABLE
- 18	5267843	AR	. SHIELD- TSR PWR SUP
- 18A	5267987	1	. SHIELD,R-LOOP/TAIWAN
			USED ON R-LOOP HI WATTAGE ONLY
- 18B	5267986	1	. SHIELD,TSR R-LOOP
			USED ON R-LOOP LO WATTAGE ONLY
- 18C	7362385	1	. SCREW- THD FORMING INDT HEX HD M4 X 8 LG ATT PT
- 19	5646070	1	. CARD ASM- TSRIE
- 20	5646070	2	. CARD ASM- TSRIE
			USED ON HI WATTAGE ONLY
- 21	7362385	AR	. SCREW- THD FORMING INDT HEX HD M4 X 8 LG ATT PT
- 22	2565179	AR	. BUMPER
- 23	5267823	1	. HOUSING ASM- TSR
- 24	5267829	2	. SCREW- SHOULDER ATT PT
- 24A	524519	AR	. CLAMP
- 25	5241439	2	. RETAINER,BOARD-DOMESTIC ONLY
- 26	5241434	2	. RETAINER,BOARD-DOMESTIC ONLY
- 27	2184088	12	. SCREW,HEX SOC- 6-32 X 7/8 LG ATT PT
- 28	5267824	10	. RETAINER,BOARD-WTC ONLY
- 28A	813179	2	. CLAMP,BOARD-WTC ONLY
- 28B	811417	12	. SCREW,HEX SOCKET H- 6-32 X 1/2 LG ATT PT
- 29	5267825	2	. RETAINER STRIP- CABLE
- 30	5699828	1	. LOGIC BOARD ASM
			USED ON 5699454 AND 5699455
- 30	5643330	1	. LOGIC BOARD ASM- KANJI
			USED ON 5699634 AND 5699635,KANJI
- 30	5643329	1	. LOGIC BOARD ASM
			USED ON 5699456 ONLY
- 30A	5267948	2	. LABEL- ENGLISH
- 30A	5267950	2	. LABEL- PORTUGUESE
- 30A	5267951	2	. LABEL- FRENCH
- 30A	5267953	2	. LABEL- GERMAN
- 30A	5267954	2	. LABEL- ITALIAN
- 30A	5267955	2	. LABEL- SPANISH
- 30A	5267956	2	. LABEL- JAPANESE
- 30A	5267962	2	. LABEL- FINNISH
- 30A	5267963	2	. LABEL- BELGIUM/FRENCH
- 30A	5267980	2	. LABEL- SWEDISH
- 30B	5267952	2	. LABEL- CANADIAN/FRENCH
- 31	5267820	1	. GATE ASM
			FOR DETAIL BREAKDOWN , SEE FIGURE 3
- 32	5267737	1	. CABLE ASM- FILE 1 SIGNAL AND D/C PWR
			USED ON HI AND LOW WATTAGE
- 32	5267739	1	. CABLE ASM- D/R CARD TO LOGIC BOARD
			USED WITH 5267709 ON HI AND LOW WATTAGE
- 32	5267743	1	. JUMPER ASM- +5V D/R CARD A
			USED ON HI AND LOW WATTAGE
- 32	5267744	1	. CABLE ASM- PWR SUPPLY / CAP / BRIDGE
			USED ON HI AND LOW WATTAGE
- 32	5267749	1	. CABLE ASM- PWR SUPPLY NO. 2 TO CAP
			USED ON HI WATTAGE ONLY
			FOR COMPONENT PARTS , SEE FIGURE 12

FOR PARTS
NOT SHOWN
SEE FIG. P-2

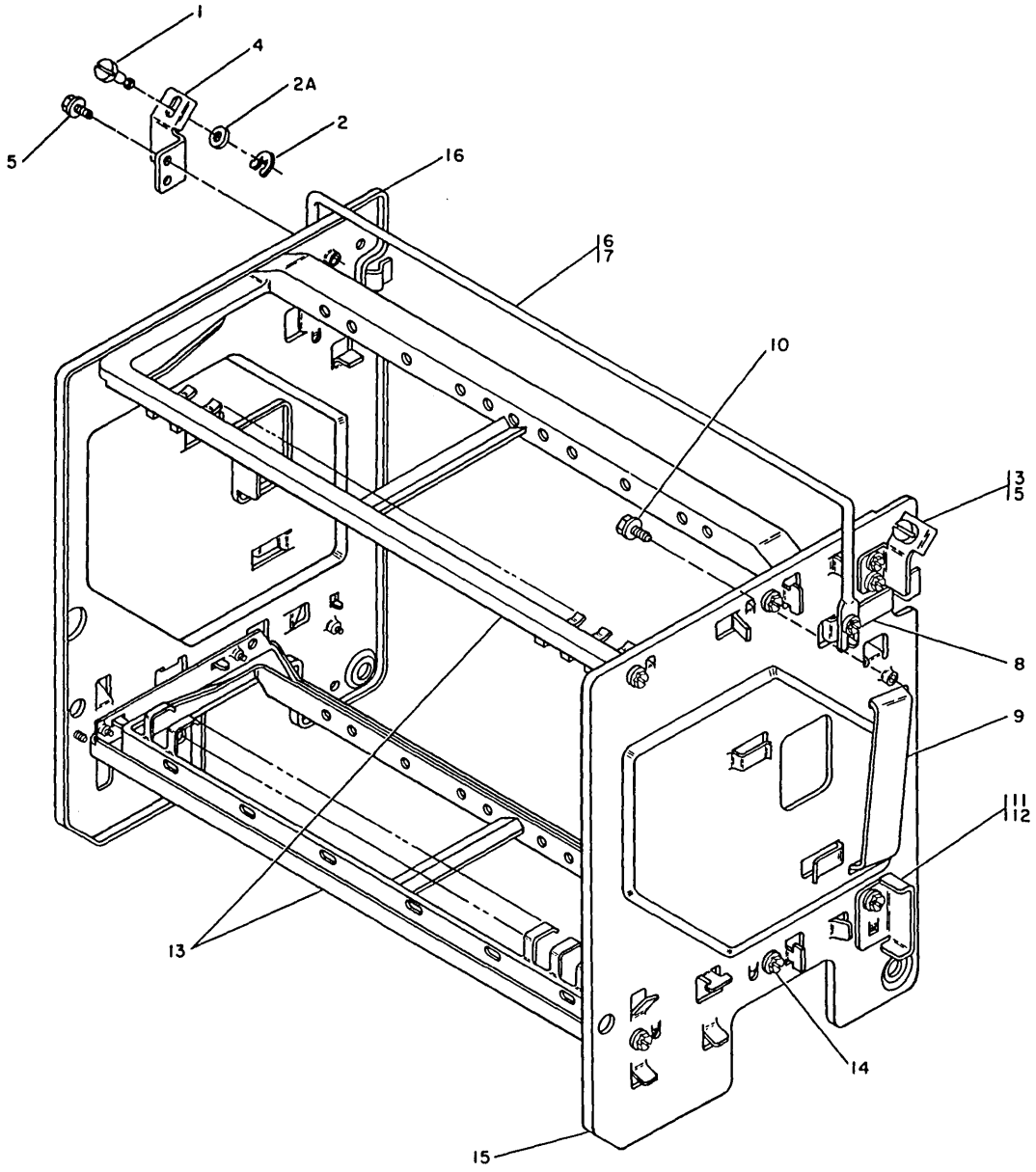

FIGURE P-3. GATE ASSEMBLY

LIST P-3. GATE ASSEMBLY

FIGURE-INDEX NUMBER	PART NUMBER	UNITS PER ASM.	DESCRIPTION 1 2 3 4
3 -	5267820	REF	GATE ASM FOR NEXT HIGHER ASM , SEE FIGURE 2-31 FOR ILLUSTRATION SEE FIGURE 3
- 1	5267933	2	. SCREW- SHOULDER,GATE M4
- 2	264641	2	. RING,RETAINING-EXT 0.114 ID X 0.025 THK
- 2A	1622305	2	. WASHER,FLAT M5- 10 OD X 1 THK
- 3	5267851	1	. RETAINER- GATE, RH
- 4	5267852	1	. RETAINER- GATE, LH
- 5	7362385	4	. SCREW- THD FORMING INDT HEX HD M4 X 8 LG ATT PT
- 6	5267877	1	. HANDLE- GATE
- 7	7362385	2	. SCREW- THD FORMING INDT HEX HD M4 X 8 LG ATT PT
- 8	5267826	2	. LATCH- TSR GATE
- 9	5267876	1	. SPRING- FLAT GATE RETAINER
- 10	7362130	1	. SCREW- THD FORMING ATT PT
- 11	5267853	2	. STOP GATE
- 12	7362385	2	. SCREW- THD FORMING INDT HEX HD M4 X 8 LG ATT PT
- 13	5267949	2	. GUIDE,CARD-GATE
- 14	5350012	8	. SCREW, THD FORMING HEX WSR HD 8-32 X .25 ATT PT
- 15	5267822	1	. PANEL GATE- RIGHT HAND
- 16	5267821	1	. PANEL GATE- LEFT HAND

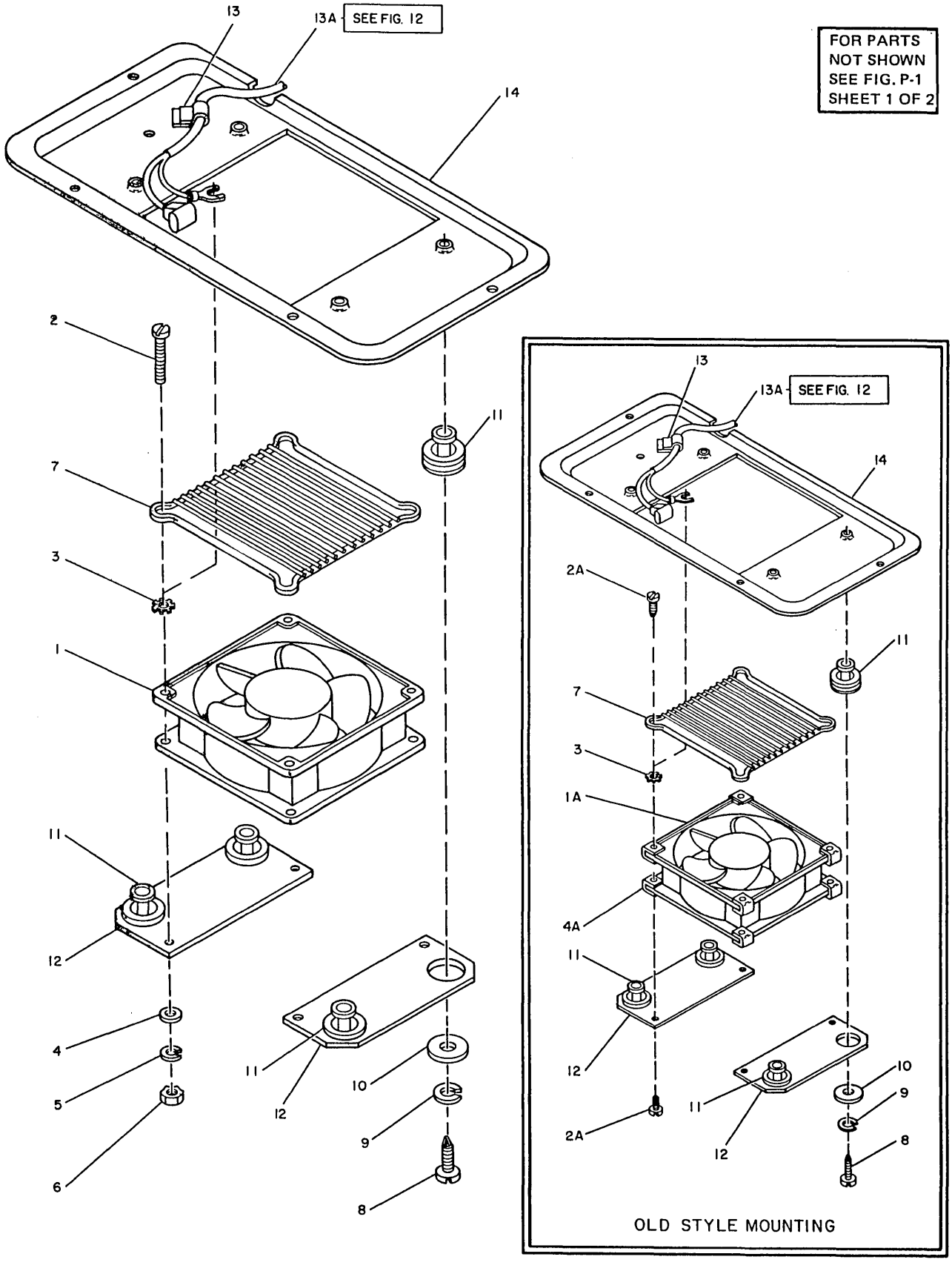

FIGURE P-4. FAN PLENUM ASSEMBLY – NEW STYLE

LIST P-4. FAN PLENUM ASSEMBLY – NEW STYLE

FIGURE-INDEX NUMBER	PART NUMBER	UNITS PER ASM.	DESCRIPTION 1 2 3 4	
4 -	5267845	REF	FAN PLENUM ASM, 120V 60 HZ USA/CANADA	
-	5267846	REF	FAN PLENUM ASM,200-240V 50/60 HZ WTC	
-	5267979	REF	FAN PLENUM ASM,100-127V 50/60 HZ WTC FOR NEXT HIGHER ASM, SEE FIGURE 1-39 FOR ILLUSTRATION SEE FIGURE 4	
- 1	4176642	1	. FAN-115V 60HZ,110/123.5V 50HZ USA/CANADA- USED ON 100-127V ONLY	
- 1	6837984	1	. FAN-200/240V 50/60HZ WTC USED ON 200-240V ONLY	
- 1A	4406501	1	. FAN-120V 50/60 HZ USA/CANADA (OLD STYLE MTG)	
- 1A	1608286	1	. FAN-200-240V 50/60 HZ WTC (OLD STYLE MTG)	
- 2	438572	4	. SCREW,MACH-UNDRCT BIND HD 6-32 X 2 LG USED ON NEW VERSION ONLY	ATT PT
- 2A	322550	8	. SCREW,MACH,BD HD 6-32 X .5 LG USED ON OLD VERSION ONLY	ATT PT
- 3	56722	1	. WASHER,LOCK-EXT TEETH NO. 6	ATT PT
- 4	257986	4	. WASHER,FLAT NO. 6 USED ON NEW VERSION ONLY	ATT PT
- 4A	4407057	8	. MOUNTING CLIP USED ON OLD VERSION ONLY	
- 5	6364	4	. WASHER,LOCK-SPLIT NO. 6 X 1/4 OD USED ON NEW VERSION ONLY	ATT PT
- 6	257187	4	. NUT,PLAIN,HEX- 6-32 X 3/8 FL W USED ON NEW VERSION ONLY	ATT PT
- 7	177946	1	. GUARD-FAN	
- 8	5677	4	. SCREW,MACH-BIND HD 10-32 X 3/4 LG	
- 9	9092	4	. WASHER-LOCK,SPLIT RING, .194 ID .337OD	
- 10	5717473	4	. WASHER-SNUBBER	
- 11	5717483	4	. ISOLATOR,FAN	
- 12	5267880	2	. BRACKET-FAN MOUNTING	
- 13	4423063	1	. RETAINER	
- 13A	5267733	1	. CABLE ASM- FAN AC FOR COMPONENT PARTS, SEE FIGURE 12	
- 13A	5267878	1	. CABLE ASM- FAN WTC FOR COMPONENT PARTS, SEE FIGURE 12	
- 14	5267865	1	. PLENUM-FAN	

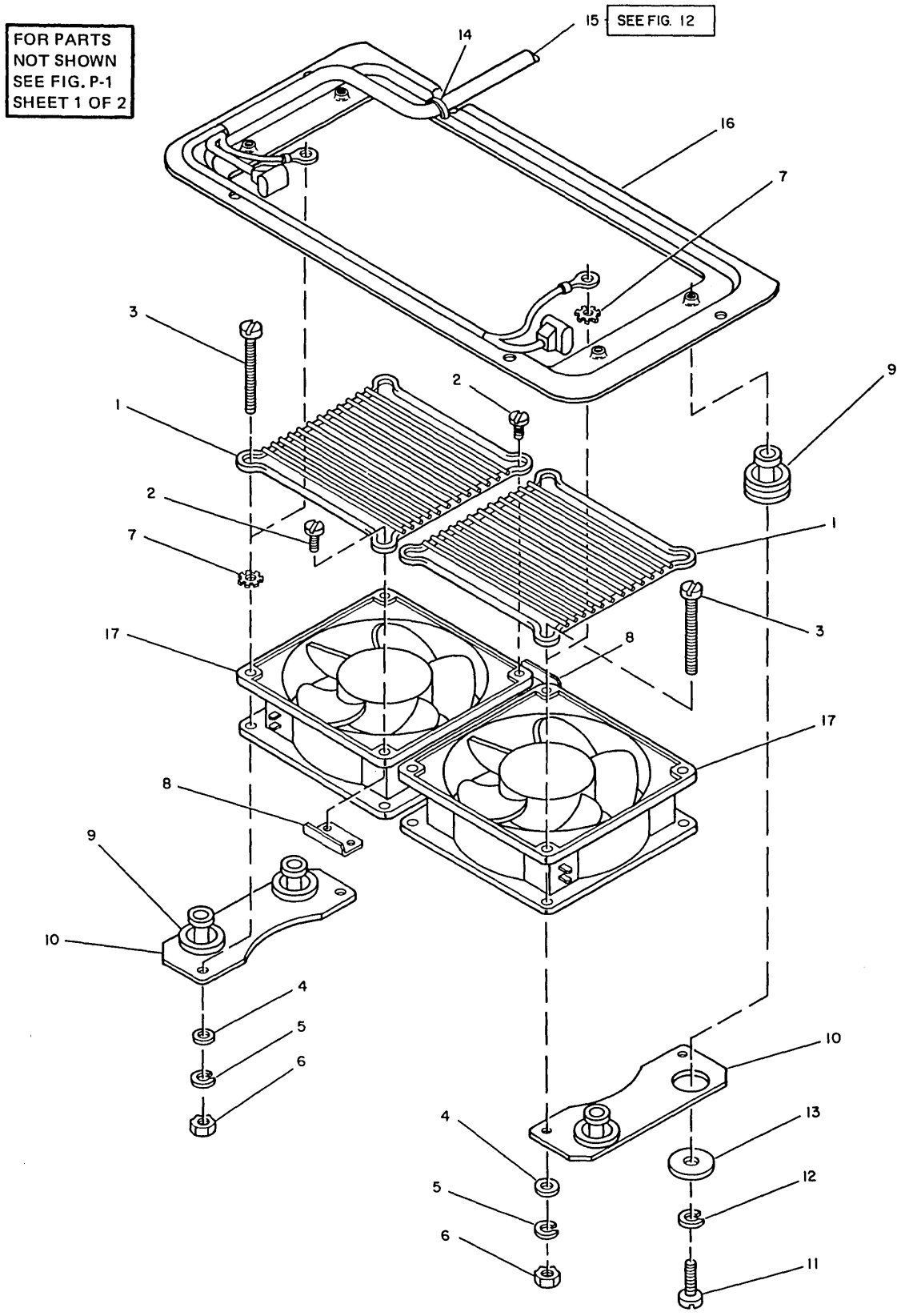

FIGURE P-4A. FAN PLENUM ASSEMBLY – OLD STYLE

LIST P-4A. FAN PLENUM ASSEMBLY – OLD STYLE

FIGURE-INDEX NUMBER	PART NUMBER	UNITS PER ASM.	DESCRIPTION 1 2 3 4	
4A-	5699504	REF	DUAL FAN ASM, 120V 60 HZ USA/CANADA	
-	5699505	REF	DUAL FAN ASM, 100V 50/60 HZ WT	
-	5699506	REF	DUAL FAN ASM, 200V 50/60 HZ WT	
			FOR NEXT HIGHER ASM, SEE FIGURE 1-39	
			FOR ILLUSTRATION SEE FIGURE 4A	
- 1	177946	2	. GUARD-FAN	
- 2	322550	4	. SCREW,MACH,BD HD 6-32 X .5 LG	ATT PT
- 3	438572	4	. SCREW,MACH-UNDRCT BIND HD 6-32 X 2 LG	ATT PT
- 4	257986	4	. WASHER,FLAT NO. 6	ATT PT
- 5	6364	4	. WASHER,LOCK-SPLIT NO. 6 X 1/4 OD	ATT PT
- 6	257187	4	. NUT,PLAIN,HEX- 6-32 X 3/8 FL W	ATT PT
- 7	56722	2	. WASHER,LOCK-EXT TEETH NO. 6	ATT PT
- 8	5699501	2	. BRACKET	
- 9	5717483	4	. ISOLATOR,FAN	
- 10	5699503	2	. BRACKET- FAN MTG,DUAL	
- 11	5677	4	. SCREW,MACH-BIND HD 10-32 X 3/4 LG	ATT PT
- 12	9092	4	. WASHER-LCCK,SPLIT RING, .194 ID .337OD	ATT PT
- 13	5717473	4	. WASHER-SNUBBER	ATT PT
- 14	5420242	1	. TY-MINIATURE	
- 15	5267768	1	. CABLE ASM- A/C DUAL FAN /DOM./	
- 15	5267769	1	. CABLE ASM- A/C DUAL FAN /W/T/	
			FOR COMPONENT PARTS, SEE FIGURE 12	
- 16	5699502	1	. PLENUM- FAN	
- 17	5699513	2	. FAN- 115VAC-60HZ,110/123.5VAC 50HZ	
			USA/CANADA- USED ON 5699504	
- 17	4716642	2	. FAN- 115VAC-60HZ,110/123.5VAC 50HZ WTC	
			USED ON 5699505	
- 17	6837984	2	. FAN- 115VAC-60HZ,110/123.5VAC 50HZ WTC	
			USED ON 5699506	

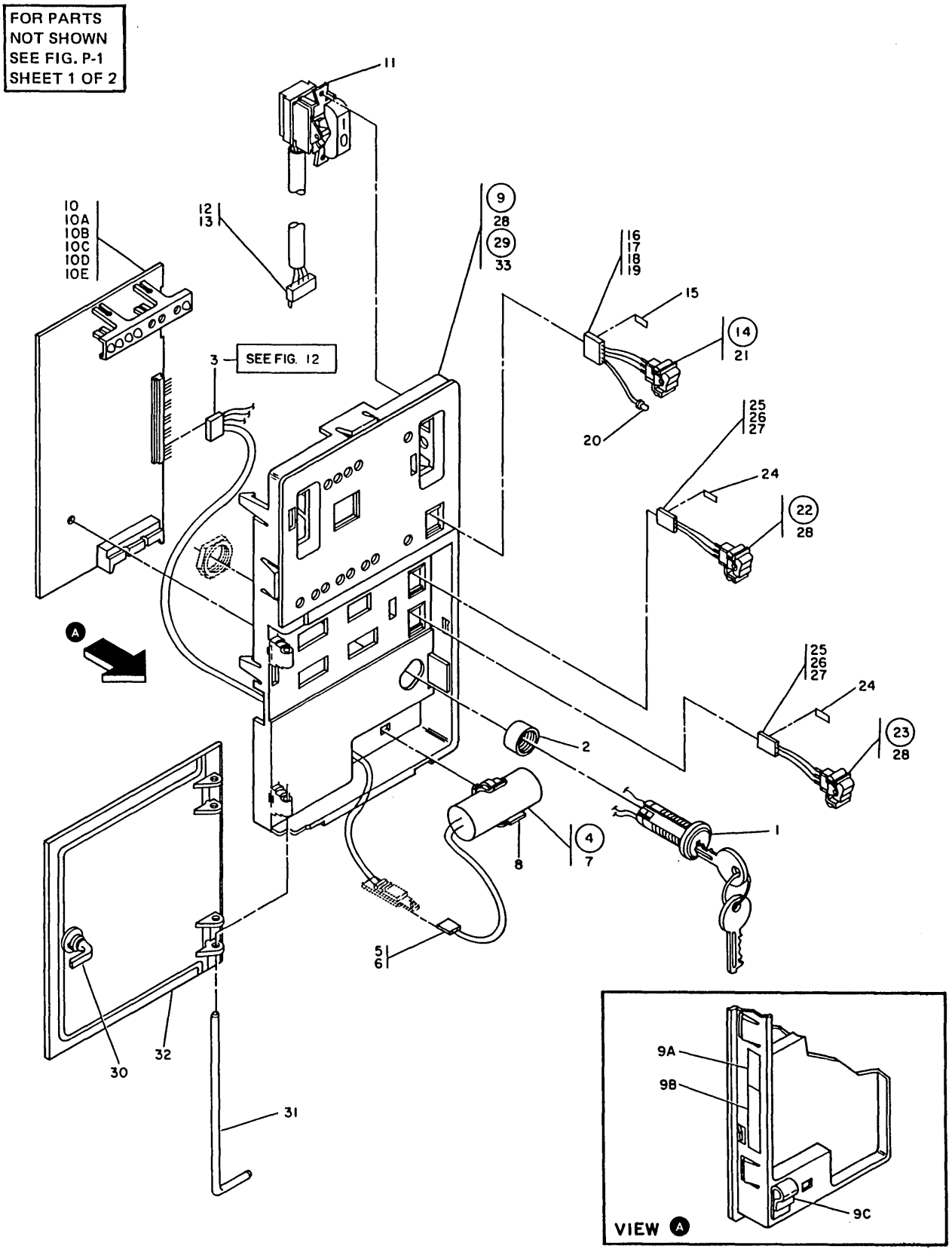

FIGURE P-5. OPS PANEL ASSEMBLY

LIST P-5. OPS PANEL ASSEMBLY

FIGURE-INDEX NUMBER	PART NUMBER	UNITS PER ASM.	DESCRIPTION 1 2 3 4
5 -	5267803 NP	REF	OPS PANEL ASM FOR NEXT HIGHER ASM , SEE FIGURE 1-7 FOR ILLUSTRATION SEE FIGURE 5
- 1	6814398	1	. SWITCH LOCK ASM
- 2	5267879	1	. SPACER- LOCK
- 3	5267870	1	. CONNECTOR ASM- CRYPTO FOR COMPONENT PARTS , SEE FIGURE 12
- 4	1743456	1	. BATTERY ASM
- 5	2637682	2	. . CONNECTOR - DISCRETE
- 6	2731835	1	. . HOUSING
- 7	1655387	1	. . BATTERY- 4.14 VOLT MERCURY
- 8	1743455	1	. CLIP- CAPACITOR
- 9	5267897	1	. OPS PANEL ASM- DDSA,X21 L OR S
- 9	5267898	1	. OPS PANEL ASM- R LOOP
- 9	5267899	1	. OPS PANEL ASM- 38LS L, EMI L OR S
- 9	5267900	1	. OPS PANEL ASM- 38LS S OR L/SNBU DOM A/A
- 9	5267901	1	. OPS PANEL ASM- 38LS S OR L/SNBU W/T A/A
- 9	5267902	1	. OPS PANEL ASM- 2400,4800,9600 BPS IM
- 9	5267864	1	. OPS PNL ASM- 38LS S OR L/SNBU DOM M/A
- 9A	138754	1	. . LABEL
- 9A	6812828	1	. . LABEL- VOLTAGE PRESENT FRENCH
- 9A	6812832	1	. . LABEL- VOLTAGE PRESENT GERMAN
- 9A	6812829	1	. . LABEL- VOLTAGE PRESENT SPANISH
- 9A	6812830	1	. . LABEL- VOLTAGE PRESENT ITALIAN
- 9A	6815188	1	. . LABEL- VOLTAGE, PORTUGUESE
- 9A	6825840	1	. . LABEL- VOLTAGE JAPANESE
- 9A	4420467	1	. . LABEL- VOLTAGE PRESENT BELGIAN
- 9A	6825818	1	. . LABEL- VOLTAGE PRESENT FINNISH
- 9A	4418722	1	. . LABEL- VOLTAGE PRESENT NORWEGIAN
- 9A	8551903	1	. . LABEL- VOLTAGE PRESENT SWEDISH
- 9B	6812831	1	. . LABEL,LINE VOLTAGE-CANADIAN FRENCH
- 9C	4423063	1	. . RETAINER USED ON 5267902 ONLY
- 10	5267726	1	. . ASM OPS PNL CD DDSA,X21 L OR S USED ON 5267897 AND 5267899
- 10	5267758	1	. . CARD ASM- OPS PNL,R-LOOP USED ON 5267898 ONLY
- 10	5267978	1	. . CARD ASM- OPS PNL 38LS S OR L/SNBU DOM A USED ON 5267900 AND 5267864
- 10	5267992	1	. . CARD ASM- OPS PNL 38LS S, L/SNBU W.T. A. USED ON 5267901 ONLY
- 10	5267993	1	. . CARD ASM- OPS PNL I/M USED ON 5267902 ONLY
- 10A	6814329	AR	. . . SWITCH- ROCKER DPDT MOMENTARY
- 10B	6814332	AR	. . . SWITCH- PC BOARD DPST
- 10C	6814331	1	. . . SWITCH- DIP TOGGLE DPST (3 SWITCHES) USED ONLY ON 5267758
- 10D	1655386	2	. . . SWITCH- DPST (3) TOGGLE USED ONLY ON 5267978
- 10E	4409554	1	. . . SWITCH USED ONLY ON 5267993
- 11	6814340	1	. . SWITCH ASM- ROCKER, DPST, POWER
- 12	1471028	4	. . . SOCKET,DUAL LANCE 14-20 AWG
- 13	1743191	1	. . . CONNECTOR
- 14	5267866	1	. . SWITCH / LED ASM- TALK / DATA
- 14	5267993	1	. . . USED ON 5267900 AND 5267901
- 15	1563214	1	. . . LABEL,CONN. - A/P1 THRU K/P5
- 16	2637689	1	. . . INSERT- NYLON
- 17	2637682	3	. . . CONNECTOR - DISCRETE
- 18	2731731	1	. . . HOUSING, 1 X 6
- 19	2637682	2	. . . CONNECTOR - DISCRETE
- 20	1589880	1	. . . L.E.D.
- 21	1655371	1	. . . SWITCH- SPDT ROCKER, SNAP-IN MTG
- 22	5267867	1	. . SWITCH ASM-SPDT PRI/SEC SPEED SEC R LOOP USED ON 5267898 ONLY
- 22	5267868	1	. . SWITCH ASM-SPDT PRI/SEC SPEED SEL USED ON 5267899,5267864,5267900 AND 5267901
- 23	5267869	1	. . SWITCH ASM-SPDT LOCAL/COMMUNICATE USED ON 5267898 ONLY
- 24	1563214	1	. . . LABEL,CONN. - A/P1 THRU K/P5
- 25	2637689	1	. . . INSERT- NYLON
- 26	2637682	AR	. . . CONNECTOR - DISCRETE
- 27	2637680	1	. . . HOUSING
- 28	1655371	1	. . . SWITCH- SPDT ROCKER, SNAP-IN MTG
- 29	5267753	1	. . OPS PANEL ASM
- 30	5267847	1	. . . LATCH- DOOR
- 31	5267848	1	. . . PIN- HINGE
- 32	5267751	1	. . . COVER- OPS PANEL
- 33	5267750	1	. . . PANEL- OPERATOR

FOR PARTS
NOT SHOWN
SEE FIG. P-1
SHEET 1 OF 1

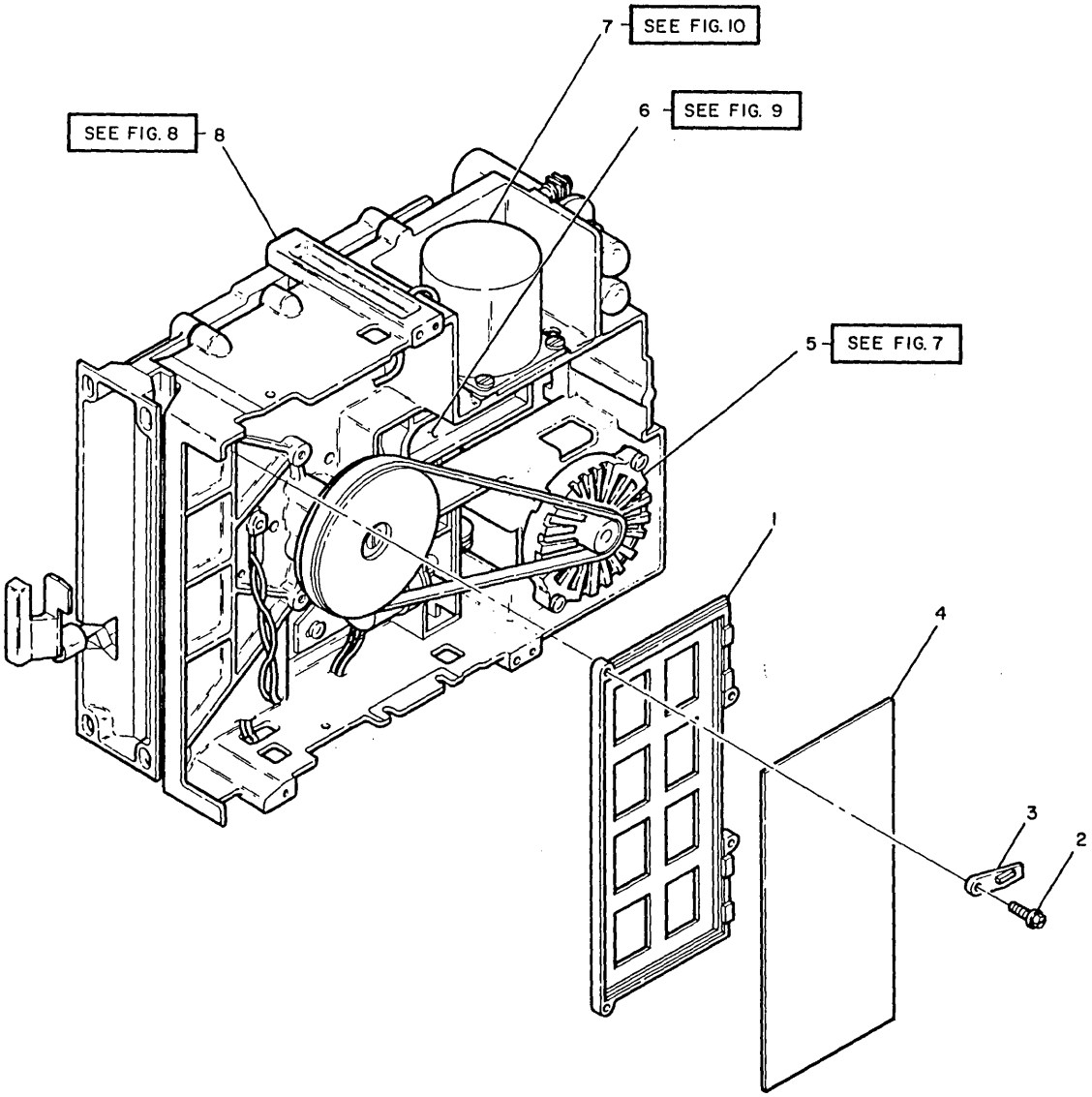

FIGURE P-6. FILE ASSEMBLY 31SD

LIST P-6. FILE ASSEMBLY 31SD

FIGURE-INDEX NUMBER	PART NUMBER	UNITS PER ASM.	DESCRIPTION 1 2 3 4
6 -	4240504	REF	FILE ASM 31SD, 100-110V 50 HZ
-	4240512	REF	FILE ASM 51TD, 100-110V 50 HZ
-	4240505	REF	FILE ASM 31SD, 200-240V 50 HZ
-	4240513	REF	FILE ASM 51TD, 200-240V 50 HZ
-	4240508	REF	FILE ASM 31SD, 100-120V 60 HZ
-	4240516	REF	FILE ASM 51TD, 100-127V 60 HZ
-	4240509	REF	FILE ASM 31SD, 200-240V 60 HZ
-	4240517	REF	FILE ASM 51TD, 200-240V 60 HZ
			FOR NEXT HIGHER ASM, SEE FIGURE 1-18
			FOR ILLUSTRATION SEE FIGURE 6
- 1	4240638	1	. HOLDER CARD
- 2	2462686	4	. SCREW- THD FORMING M4 X 16 LG ATT PT
- 3	4240584	2	. RETAINER- CARD
- 4	4240724	1	. CARD ASM- 31SD
- 4	4240726	1	. CARD ASM- 51TD
- 5	NO NO.	NP	. MOTOR,CAPACITOR AND ACTUATOR ASM
			FOR DETAIL BREAKDOWN , SEE FIGURE 7
- 6	NO NO.	NP	. CARRIAGE AND PULLEY ASM
			FOR DETAIL BREAKDOWN , SEE FIGURE 9
- 7	NO NO.	NP	. SPINDLE AND PULLEY ASM
			FOR DETAIL BREAKDOWN , SEE FIGURE 10
- 8	NO NO.	NP	. DISKETTE GUIDE AND CLAMPING ASM
			FOR DETAIL BREAKDOWN , SEE FIGURE 8

FOR PARTS NOT SHOWN SEE FIG. P-6

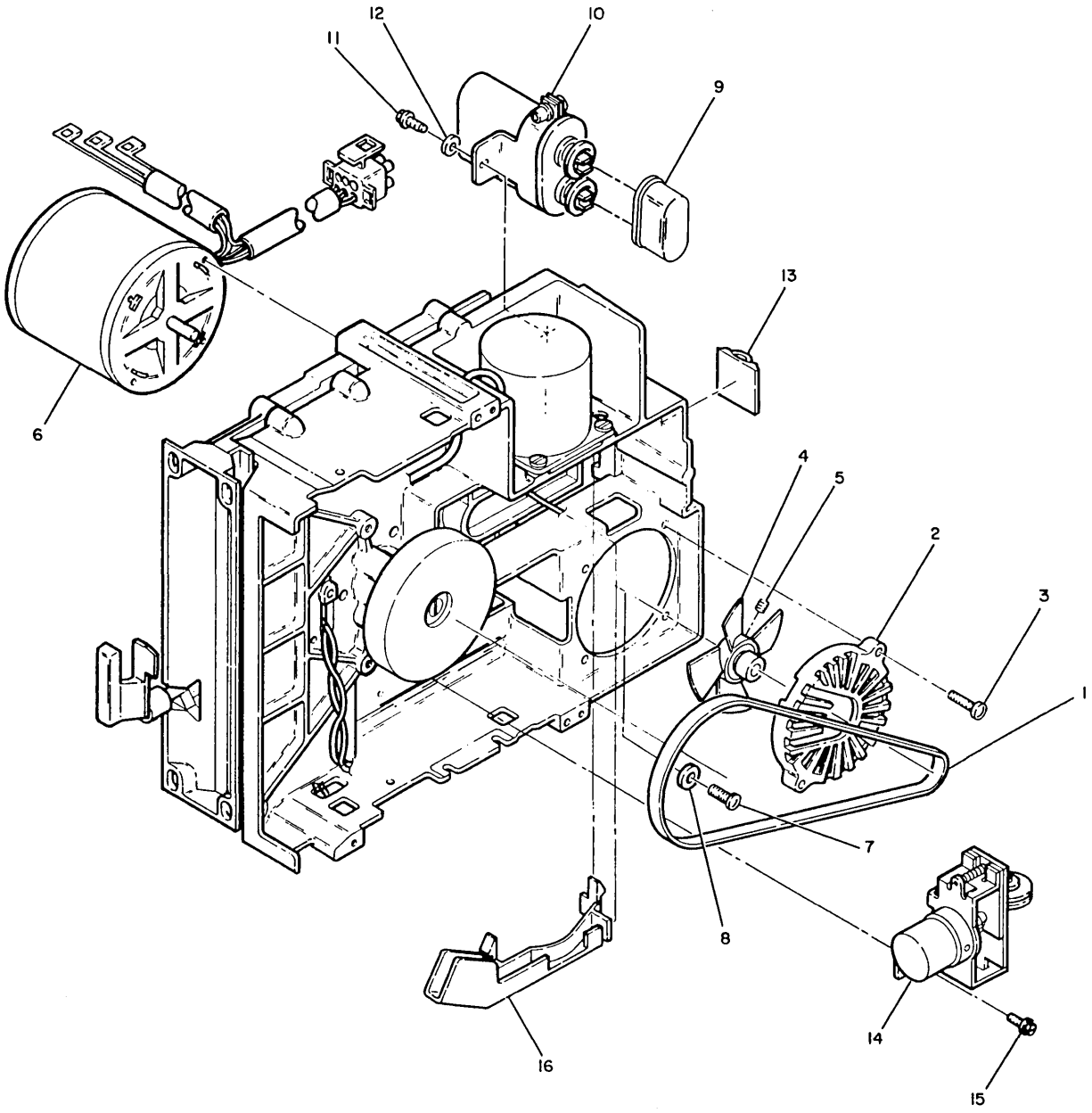

FIGURE P-7. MOTOR, CAPACITOR, ACTUATOR ASSEMBLY

LIST P-7. MOTOR, CAPACITOR, ACTUATOR ASSEMBLY

FIGURE-INDEX NUMBER	PART NUMBER	UNITS PER ASM.	DESCRIPTION 1 2 3 4	
7 -	NO NO.	NP	MOTOR,CAPACITOR AND ACTUATOR ASM FOR NEXT HIGHER ASM , SEE FIGURE 6-5 FOR ILLUSTRATION SEE FIGURE 7	
- 1	4240604	1	. BELT- 50HZ	
- 1	4240605	1	. BELT- 60HZ	
- 2	4240671	1	. ENCLOSURE- FAN	
- 3	1621194	2	. SCREW,MACH PAN HD-M4 X 20 LG	ATT PT
- 4	4240673	1	. FAN AND PULLEY ASM- 50HZ	
- 4	4240675	1	. FAN AND PULLEY ASM- 60HZ	
- 5	1621709	1	. SCREW,HEADLESS SOCKET SET M4 X 5 LG	ATT PT
- 6	4240677	1	. MOTOR- ASM 100-123.5V 50HZ/100-127V 60HZ	
- 6	4240679	1	. MOTOR- ASM 200-240V	
- 7	1621192	2	. SCREW,MACH PAN HD-M4 X 12 LG	ATT PT
- 8	22478	2	. WASHER,FL- 0.170 ID 0.375 OD 0.32 THK	ATT PT
- 9	836008	1	. BOOT	
- 10	4240681	1	. CAPACITOR AND CLAMP ASM	
- 11	2462685	1	. SCREW- THD FORMING M4 X 10 LG	ATT PT
- 12	35229	1	. WASHER,11/64 ID X 7/16 OD	ATT PT
- 13	2596291	1	. CLIP- CABLE	
- 14	4240667	1	. ACTUATOR ASM- 31SD	
- 14	4240666	1	. ACTUATOR ASM- 51TD	
- 15	2462685	2	. SCREW- THD FORMING M4 X 10 LG	ATT PT
- 16	4240610	1	. GUIDE- HEAD CABLE	

FOR PARTS
NOT SHOWN
SEE FIG. P-6

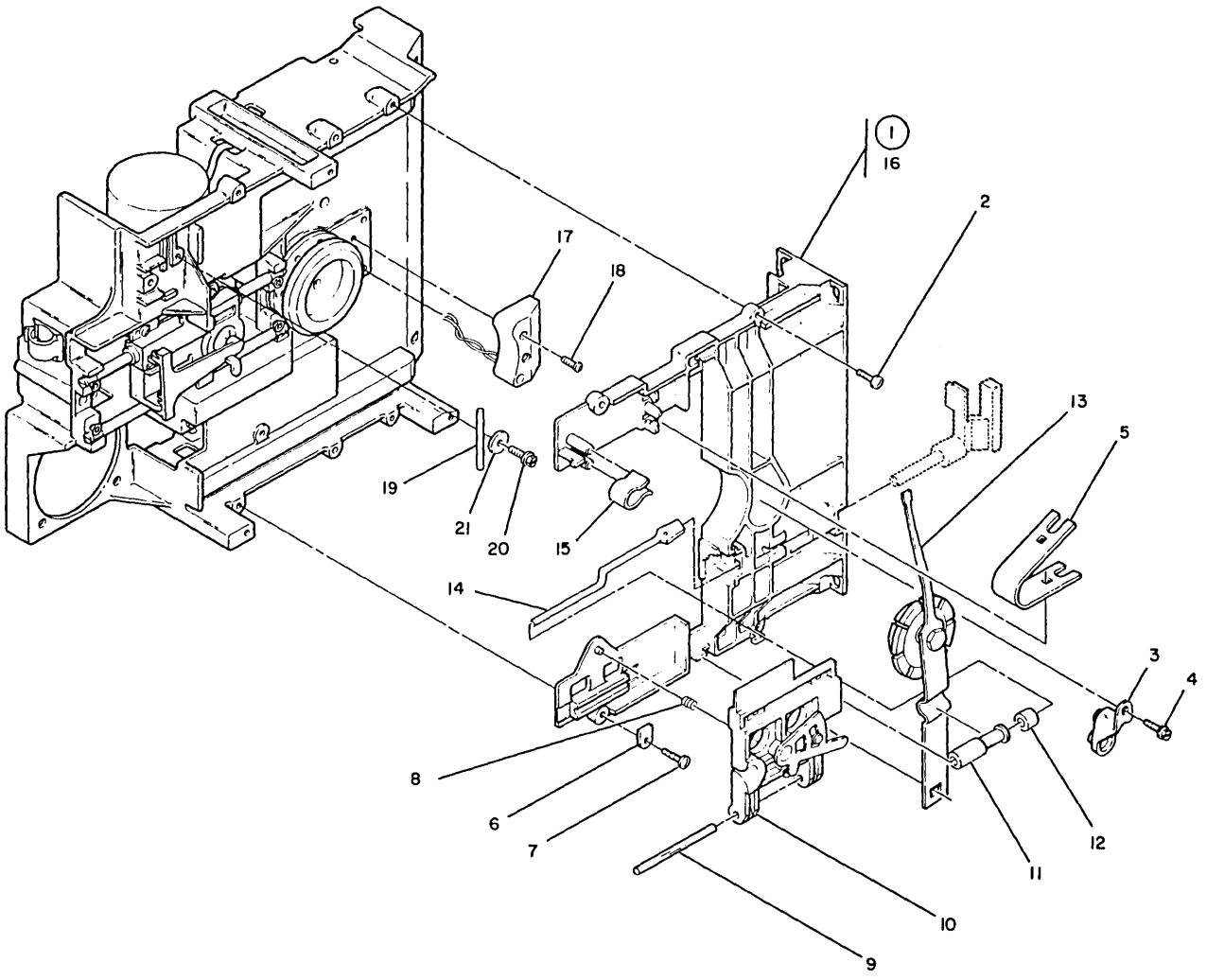

FIGURE P-8. DISKETTE GUIDE AND CLAMP ASSEMBLY

LIST P-8. DISKETTE GUIDE AND CLAMP ASSEMBLY

FIGURE-INDEX NUMBER	PART NUMBER	UNITS PER ASM.	DESCRIPTION 1 2 3 4	
8 -	NO NO. NP		DISKETTE GUIDE AND CLAMPING ASM FOR NEXT HIGHER ASM, SEE FIGURE 6-8 FOR ILLUSTRATION SEE FIGURE 8	
- 1	4240683	1	. GUIDE ASM- 3ISD	
- 1	4240684	1	. GUIDE ASM- 5ITD	
- 2	1621193	2	. SCREW,MACH PAN HD-M4 X 16 LG	ATT PT
- 3	4240662	1	. . LED ASM	
- 3	4240661	1	. . LED ASM- 51TD	
- 4	4364729	1	. . SCREW	ATT PT
- 5	4240631	1	. . SPRING- CARRIAGE ADJUST	
- 6	4240659	1	. . RETAINER-BAIL PIVOT	
- 7	1621193	1	. . SCREW,MACH PAN HD-M4 X 16 LG	ATT PT
- 8	4240582	1	. . BAIL- SLIM	
- 8	4240583	1	. . SPRING,COMPRESSION-TRIM DISKETTES	
- 9	2462574	1	. . PIN- TIMING	
- 10	4240580	1	. . BAIL ASM- ACTUATOR	
- 11	4240614	1	. . ROLLER	
- 12	4240644	1	. . ROLL ASM	
- 12	4240687	1	. . ROLL ASM 5ITD	
- 13	4240589	1	. . COLLET ASM	
- 14	4240592	1	. . LEVER	
- 15	4240632	1	. . SPRING- FEELER GAGE	
- 16	4240663	1	. . GUIDE- DISKETTE	
- 17	4240574	1	. PTX ASM \	
- 17	4240576	1	. PTX ASM-TRIM DISKETTES	
- 18	2462686	1	. SCREW- THD FORMING M4 X 16 LG	ATT PT
- 19	5562019	1	. PIN,TIMING	
- 20	2462685	1	. SCREW- THD FORMING M4 X 10 LG	ATT PT
- 21	35229	1	. WASHER,11/64 ID X 7/16 OD	ATT PT

FOR PARTS
NOT SHOWN
SEE FIG. P-6

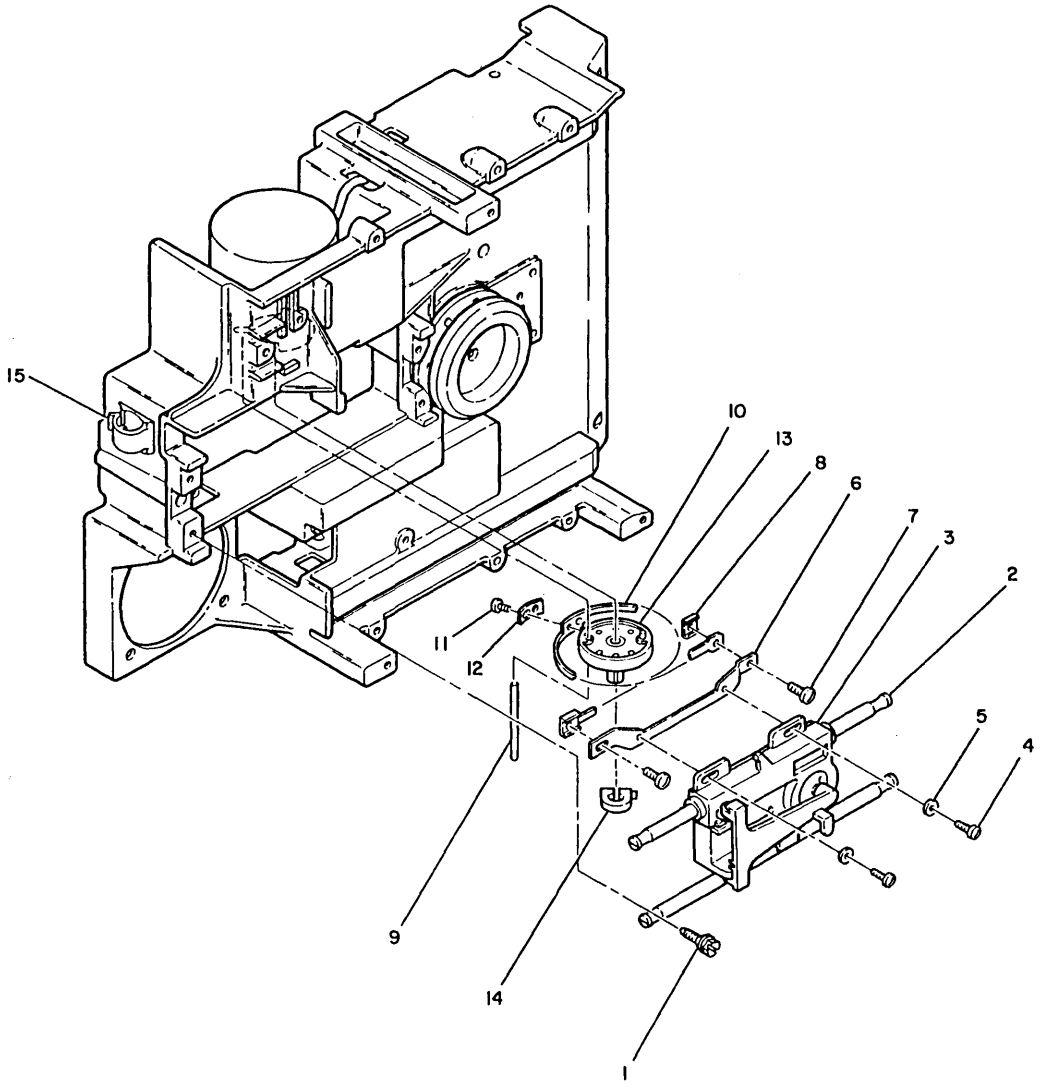

FIGURE P-9. CARRIAGE AND PULLEY ASSEMBLY

LIST P-9. CARRIAGE AND PULLEY ASSEMBLY

FIGURE-INDEX NUMBER	PART NUMBER	UNITS PER ASM.	DESCRIPTION 1 2 3 4	
9 -	NO NO.	NP	CARRIAGE AND PULLEY ASM FOR NEXT HIGHER ASM , SEE FIGURE 6-6 FOR ILLUSTRATION SEE FIGURE 9	
- 1	4240648	4	. SCREW- THREAD FORMING M4 X 12 LG	
- 2	4240573	2	. ROD- GUIDE	
- 3	4240615	1	. HEAD/CARRIAGE ASM- 31SD	
- 3	4240620	1	. HEAD/CARRIAGE ASM- 51TD	
- 4	1621170	2	. SCREW,MACH PAN HD-M3 X 6 LG	ATT PT
- 5	1622302	2	. WASHER,FLAT M3- 50D X 0.5 THK	ATT PT
- 6	4240600	1	. BRACKET- BAND TO CARRIAGE	
- 7	1621170	2	. SCREW,MACH PAN HD-M3 X 6 LG	ATT PT
- 8	4240601	1	. CLAMP- BAND TO BRACKET	ATT PT
- 9	5562019	1	. PIN,TIMING	
- 10	4240596	1	. ASM- BAND	
- 11	1621170	1	. SCREW,MACH PAN HD-M3 X 6 LG	ATT PT
- 12	4240599	1	. CLAMP- BAND TO PULLEY	
- 13	4240594	1	. PULLEY ASM	
- 14	2305493	1	. CLAMP	ATT PT
- 15	2596291	1	. CLAMP	

FOR PARTS
NOT SHOWN
SEE FIG. P-6

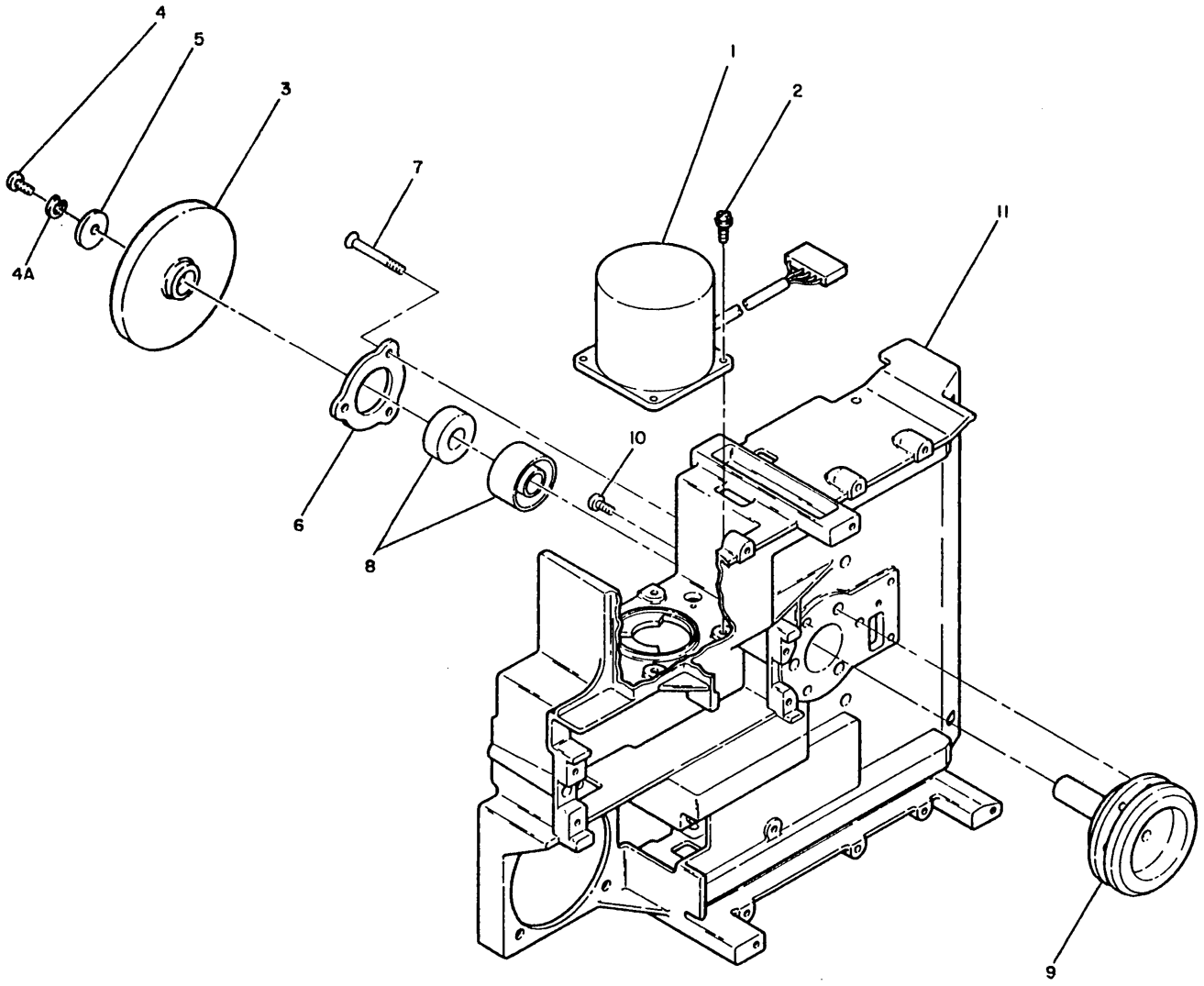

FIGURE P-10. SPINDLE AND PULLEY ASSEMBLY

LIST P-10. SPINDLE AND PULLEY ASSEMBLY

FIGURE-INDEX NUMBER	PART NUMBER		UNITS PER ASM.	DESCRIPTION 1 2 3 4	
10 -	NO NO.		NP	SPINDLE AND PULLEY ASM FOR NEXT HIGHER ASM , SEE FIGURE 6-7 FOR ILLUSTRATION SEE FIGURE 10	
- 1	4240593		1	. MOTOR ASM- STEPPER	
- 2	2462685		4	. SCREW- THD FORMING M4 X 10 LG	ATT PT
- 3	4240557	NR	1	. PULLEY- SPINDLE	
- 4	5562071	NP	1	. SCREW- PULLEY MTG 10-32 X .50LG	ATT PT
- 4A	9092	NR	1	. WASHER-LOCK,SPLIT RING, .194 ID .337OD	ATT PT
- 5	49374	NP	1	. WASHER- FRICTION	ATT PT
- 6	4240556	NR	1	. RETAINER- BEARING, SPINDLE, BACK	
- 7	1621327	NR	3	. SCREW,SLOTTED FL HD- M5 X 40 LG	ATT PT
- 8	4240555	NR	1	. SPACER- BEARING, MATCHED SET	
- 9	4240552	NR	1	. SPINDLE ASM- DRIVE	
- 10	1621190	NR	3	. SCREW,MACH PAN HD- M4 X 8 LG	ATT PT
- 11	4240551	NR	1	. CASTING- DRIVE	

FOR PARTS
NOT SHOWN
SEE FIG. P-1
SHEET 2 OF 2

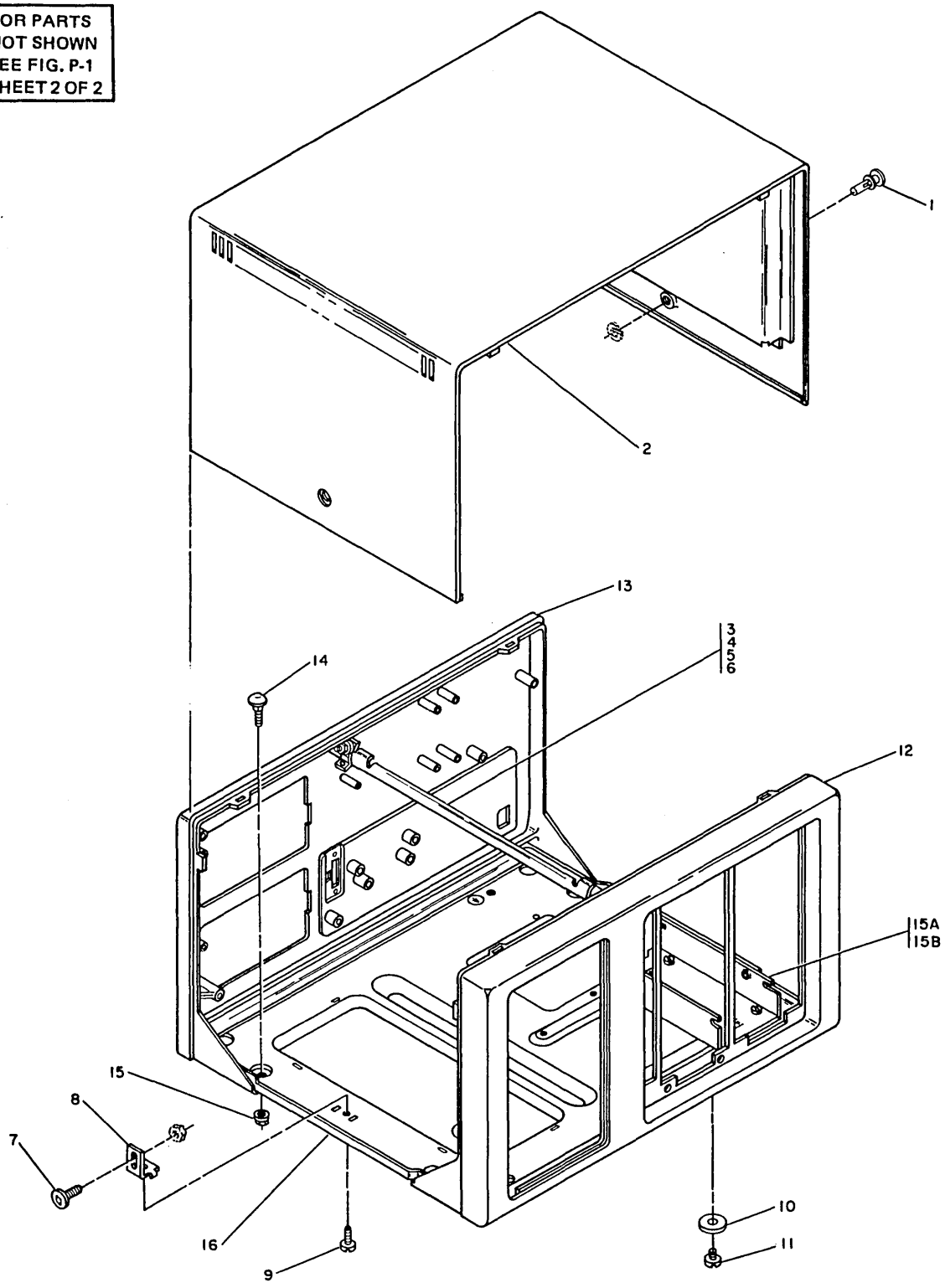

FIGURE P-11. CHASSIS ASSEMBLY

LIST P-11. CHASSIS ASSEMBLY

FIGURE-INDEX NUMBER	PART NUMBER	UNITS PER ASM.	DESCRIPTION 1 2 3 4
11 -	5267810	1	CHASSIS ASM FOR NEXT HIGHER ASM , SEE FIGURE 1-108 FOR ILLUSTRATION SEE FIGURE 11
- 1	5267939	2	. STUD- FASTENER
- 2	5267814	1	. COVER ASM
- 3	5267850	1	. TIE BAR
- 4	1622403	2	. NUT,HEX M4 X 0.7 ATT PT
- 5	1622304	2	. WASHER,FLAT M4- 9 OD X 0.8 THK ATT PT
- 6	1622346	2	. WASHER,LOCK EXT STAR M4- 8 OD X 0.5 THK ATT PT
- 7	5267938	2	. RECEPTACLE,SCREW-TYPE AND NUT
- 8	5267937	2	. BRACKET- COVER LATCH MTG
- 9	7362385	2	. SCREW- THD FORMING INDT HEX HD M4 X 8 LG ATT PT
- 10	1154429	4	. PAD
- 11	1164976	4.	. SCREW- FOOT MTG .250-20 X .404LG ATT PT
- 12	5267811	1	. CASTING- FRONT
- 13	5267812	1	. CASTING- REAR
- 14	736992	10	. BOLT,CARRIAGE- 0.250-20 X 0.50 LG ATT PT
- 15	2565265	10	. NUT-WASHER PREASSEMBLED .250-20 ATT PT
- 15A	5699522	1	. BRACKET- FILE MTG SINGLE
- 15B	7362385	4	. SCREW- THD FORMING INDT HEX HD M4 X 8 LG ATT PT
- 16	5267813	1	. CHASSIS- BASE ASM

LIST P-12. CABLE ASSEMBLIES WITH COMPONENT PARTS (SHEET 1 OF 8)

FIGURE-INDEX NUMBER	PART NUMBER	UNITS PER ASM.	DESCRIPTION 1 2 3 4
12 - A	1714951	REF	CABLE ASM- EXTERNAL LEASED LINE 10FT (3,05M) USA/CANADA FOR COMPONENT PARTS SEE INDICES -10A, -15 ,-18A,-28,-35,-55,-55B AND -55G
- A	1714952	REF	CABLE ASM- EXTERNAL LEASED LINE 20FT (6,1M) USA/CANADA FOR COMPONENT PARTS SEE INDICES -10A, -15, -18A,-28,-35,-55,-55B AND -55G
- A	1714953	REF	CABLE ASM- EXTERNAL LEASED LINE 30FT (9,14M) USA/CANADA FOR COMPONENT PARTS SEE INDICES -10A, -15, -18A,-28,-35,-55,-55B AND -55G
- A	1714954	REF	CABLE ASM- EXTERNAL LEASED LINE 40FT (12,19M) USA/CANADA FOR COMPONENT PARTS SEE INDICES -10A, -15, -18A,-28,-35,-55,-55B AND -55G
- A	1714960	REF	CABLE ASM- EXTERNAL SN-MA 10FT (3,05M) USA/CANADA FOR COMPONENT PARTS SEE INDICES -10A, -15,-18A,-28,-35,-55,-55B AND -55G
- A	1714961	REF	CABLE ASM- EXTERNAL SN-MA 20FT(6,1M) USA/CANADA FOR COMPONENT PARTS SEE INDICES -10A, -15,-18A,-28,-35,-55,-55B AND -55G
- B	1714962	REF	CABLE ASM- EXTERNAL SN-MA 30 FT (9,14M) USA CANADA FOR COMPONENT PARTS SEE INDICES -10A, -15,-18A,-28,-35,-55,-55B AND -55G
- B	1714963	REF	CABLE ASM- EXTERNAL SN-MA 40 FT (12,19M) FOR COMPONENT PARTS SEE INDICES -10A, -15,-18A,-28,-35,-55,-55B AND -55G
- B	1714970	REF	CABLE ASM- EXTERNAL LOOP FOR COMPONENT PARTS SEE INDICES -10A, -15,-28 AND -55F
- B	1714973	REF	CABLE ASM- EXTERNAL SN-AA 10FT (3,05M) USA/CANADA FOR COMPONENT PARTS SEE INDICES -10A, 15,-18A,-28,-55G AND -58B
- B	1714974	REF	CABLE ASM- EXTERNAL SN-AA 20FT (6,1M) USA/CANADA FOR COMPONENT PARTS SEE INDICES -10A, -15,-18A,-28,-55G AND -58B
- B	1714975	REF	CABLE ASM- EXTERNAL SN-AA 30FT (9,14M) USA/CANADA FOR COMPONENT PARTS SEE INDICES -10A, -15,-18A,-28,-55G AND -58B
- C	1714976	REF	CABLE ASM- EXTERNAL SN-AA 40FT(12,19M) -USA/CANADA FOR COMPONENT PARTS SEE INDICES -10A, -15,-18A,-28,-55G AND -58B
- C	1714978	REF	CABLE ASM- LL SNBU-AA 10FT(3.05 (3,05M USA/CANADA FOR COMPONENT PARTS SEE INDICES -10A, , -15,-18A,-28,-35,-55,-55B,-55G AND -58B
- C	1714979	REF	CABLE ASM- EXT LL SNBU-AA 20FT(6,1M) USA/CANADA FOR COMPONENT PARTS SEE INDICES -10A, -15, -18A,-28,-35,-55,-55B,-55G AND -58B
- C	1714980	REF	CABLE ASM- EXT LL SNBU-AA 30FT (9,14M) USA/CANADA FOR COMPONENT PARTS SEE INDICES -10A, -15,-18A,-28,-35,-55,-55B,-55G AND -58B
- C	1714981	REF	CABLE ASM- EXT LL SNBU-AA 40FT USA/CANADA) FOR COMPONENT PARTS SEE INDICES -10A, -15,-18A,-28,-35,-55,-55B,-55G AND -58B
- C	1714983	REF	CABLE ASM- EXT LL SNBU-MA 10FT(3,05M) USA/CANADA FOR COMPONENT PARTS SEE INDICES -10A, -15,-18A,-28,-35,-55B AND -55G
- D	1714984	REF	CABLE ASM- EXT LLB SNBU-MA 20FT (6,1M) USA/CANADA FOR COMPONENT PARTS SEE INDICES -10A, -15,-18A,-28,-35,-55B AND -55G
- D	1714985	REF	CABLE ASM- EXT LL SNBU-MA 30FT(9,14M) USA/CANADA

LIST P-12. CABLE ASSEMBLIES WITH COMPONENT PARTS (SHEET 2 OF 8)

FIGURE-INDEX NUMBER	PART NUMBER	UNITS PER ASM.	1 2 3 4 DESCRIPTION
12			FOR COMPONENT PARTS SEE INDICES -10A, -15,-18A,-28,-35,-55B AND -55G
- D	1714986	REF	CABLE ASM- EXT LL SNBU-MA 40FT(12,19M) USA/CANADA FOR COMPONENT PARTS SEE INDICES -10A, -15,-18A,-28,-35,-55B AND 55G
- D	1714988	REF	CABLE ASM- EXTERNAL LEASED LINE 10FT (3,05M) WT FOR COMPONENT PARTS SEE INDICES -10A, -15,-18A,-28,-53 AND -55G
- D	1714989	REF	CABLE ASM- EXTERNAL LEASED LINE 20FT (6,1M) WT FOR COMPONENT PARTS SEE INDICES -10A, -15,-18A,-28,-53 AND -55G
- D	1714990	REF	CABLE ASM- EXTERNAL LEASED LINE 30FT (9,14M) WT FOR COMPONENT PARTS SEE INDICES -10A, -15,-18A,-28,-53 AND -55G
- E	1714991	REF	CABLE ASM- EXTERNAL LEASED LINE 40FT (12,19M) WT FOR COMPONENT PARTS SEE INDICES -10A, -15,-18A,-28,-53 AND -55G
- E	1714993	REF	CABLE ASM- EXT SW-AA/MA OR LL-SNBU-AA/MA 10FT (3,05M) WT FOR COMPONENT PARTS SEE INDICES -10A, -15,-18A,-28,-53 AND -55G
- E	1714994	REF	CABLE ASM- EXT SW-AA/MA OR LL-SNBU-AA/MA 20FT (6,1M) WT FOR COMPONENT PARTS SEE INDICES -10A, -15,-18A,-28,-53 AND -55G
- E	1714995	REF	CABLE ASM- EXT SW-AA/MA OR LL-SNBU-AA/MA 30FT (9,14M) WT FOR COMPONENT PARTS SEE INDICES -10A, -15,-18A,-28,-53 AND -55G
- E	1714996	REF	CABLE ASM- EXT SW-AA/MA OR LL-SNBU-AA/MA 40FT (12,19M) WT FOR COMPONENT PARTS SEE INDICES -10A, -15,-18A,-28,-53 AND -55G
- E	1743331	REF	CABLE ASM- WRAP EIA (EXTERNAL) METRIC 10FT (3,05M) FOR COMPONENT PARTS SEE INDICES -4,-10A, -15A,-17,-18,-18A,-28,-50 AND -55G
- F	1743332	REF	CABLE ASM- WRAP EIA (EXTERNAL) METRIC 20FT (6,1M) FOR COMPONENT PARTS SEE INDICES -4,-10A, -15A,-17,-18,-18A,-28,-50 AND -55G
- F	1743333	REF	CABLE ASM- WRAP EIA (EXTERNAL) METRIC 30FT (9,14M) FOR COMPONENT PARTS SEE INDICES -4,-10A, -15A,-17,-18,-18A,-28,-50 AND -55G
- F	1743334	REF	CABLE ASM- WRAP EIA (EXTERNAL) METRIC 40FT (12,19M) FOR COMPONENT PARTS SEE INDICES -4,-10A, -15A,-17,-18,-18A,-28,-50 AND -55G
- F	1743531	REF	CABLE ASM- WRAP EIA (EXTERNAL) INCH 10FT (3,05M) FOR COMPONENT PARTS SEE INDICES -4,-10A, -15A,-17,-18,-18A,-28,-50 AND -55G
- F	1743532	REF	CABLE ASM- WRAP EIA (EXTERNAL) INCH 20FT (6,1M) FOR COMPONENT PARTS SEE INDICES -4,-10A, -15A,-17,-18,-18A,-28,-50 AND -55G
- F	1743533	REF	CABLE ASM- WRAP EIA (EXTERNAL) INCH 30FT(9,14M) FOR COMPONENT PARTS SEE INDICES -4,-10A, -15A,-17,-18,-18A,-28,-50 AND -55G
- G	1743534	REF	CABLE ASM- WRAP EIA (EXTERNAL) INCH 40FT (12,19M) FOR COMPONENT PARTS SEE INDICES -4,-10A -15A,-17,-18,-18A,-28,-50 AND -55G
- G	2767156	REF	CABLE ASM- ADAPTOR INTEGRATED MODEM 4 WIRE WT FOR COMPONENT PARTS SEE INDICES -42, -58A AND -65
- G	2767157	REF	CABLE ASM- ADAPTOR INTEGRATED MODEM 4 WIRE WT FOR COMPONENT PARTS SEE INDICES -42,

LIST P-12. CABLE ASSEMBLIES WITH COMPONENT PARTS (SHEET 3 OF 8)

FIGURE-INDEX NUMBER	PART NUMBER	UNITS PER ASM.	DESCRIPTION 1 2 3 4
12			-58A AND -65
- G	2767158	REF	CABLE ASM- ADAPTOR INTEGRATED MODEM 4 WIRE WT 58A AND -65
- G	2767159	REF	CABLE ASM- ADAPTOR INTEGRATED MODEM 4 WIRE WT FOR COMPONENT PARTS SEE INDICES -42, -58A AND -65
- G	2767160	REF	CABLE ASM- ADAPTOR INTEGRATED MODEM 4 WIRE WT FOR COMPONENT PARTS SEE INDICES -42, -58A AND -65
- H	2767161	REF	CABLE ASM- ADAPTOR INTEGRATED MODEM 4 WIRE WT FOR COMPONENT PARTS SEE INDICES -38,-58A AND -65
- H	2767164	REF	CABLE ASM- ADAPTOR INTEGRATED MODEM 4 WIRE WT FOR COMPONENT PARTS SEE INDICES -40, -58A AND -65
- H	2767165	REF	CABLE ASM- ADAPTOR INTEGRATED MODEM 4 WIRE WT FOR COMPONENT PARTS SEE INDICES -42, -58A AND -65
- H	2767166	REF	CABLE ASM- ADAPTOR INTEGRATED MOEM 4 WIRE WT FOR COMPONENT PARTS SEE INDICES -26,-39, -58A AND -65
- H	5267729	REF	CABLE ASM- ANR ADAPTOR FOR COMPONENT PARTS SEE INDICES 7,9,29 AND 50
- H	5267733	REF	CABLE ASM- FAN AC USA/CANADA FOR COMPONENT PARTS SEE INDICES -1,-29, 54,-54B,-57 AND -64
- J	5267734	REF	CABLE ASM- TMFR INPUT W/T USED ON WTC ONLY FOR COMPONENT PARTS SEE INDICES -27,-32, -36,-54,-60 AND -64
- J	5267735	REF	CABLE ASM- OP'S PANEL ETA/DDSA FOR COMPONENT PARTS SEE INDICES -8,-9, -14,-24A,-29 AND -51
- J	5267736	REF	CABLE ASM- OP'S PANEL R LOOP FOR COMPONENT PARTS SEE INDICES -8,-9, -14A,-24A,-29 AND -51
- J	5267737	REF	CABLE ASM- FILE 1 SIGNAL AND D/C POWER FOR COMPONENT PARTS SEE INDICES -14,-16, -22,-25,-27,-29,-31,-48A,-59 AND -60
- J	5267739	REF	CABLE ASM- DIR CARD TO LOGIC BOARD FOR COMPONENT PARTS SEE INDICES -14,-16, -24,-29 AND -31
- J	5267740	REF	CABLE ASM- TP FOR COMPONENT PARTS SEE INDICES -8,-9, -11A,-29,-33 AND -51
- J	5267741	REF	CABLE ASM- PRI/PWR BOX-W/T USED ON WTC ONLY FOR COMPONENT PARTS SEE INDICES -12,-13, -20,-27,-29,-32,-48,-48A,-55 AND -56
- K	5267743	REF	JUMPER ASM- +5V D/R CARD A FOR COMPONENT PARTS SEE INDICES -48A AND -61
- K	5267744	REF	CABLE ASM- PWR SUPPLY/CAP/BRIDGE FOR COMPONENT PARTS SEE INDICES -27,-29, -43,-44,-52A,-55F AND -64
- K	5267745	REF	CABLE ASM- OP'S PANEL CONTROL FOR COMPONENT PARTS SEE INDICES -8,-9, -14,-24,-29 AND -51
- K	5267748	REF	CABLE ASM- PRI/PWR BOX-DOM USED ON DOM ONLY FOR COMPONENT PARTS SEE INDICES -12,-13, -19,-20,-27,-32,-48,-48A,-55 AND -56
- K	5267749	REF	CABLE ASM- PWR SUPPLY NO. 2 TO CAP FOR COMPONENT PARTS SEE INDICES -27,-29, -43,-52A,-58 AND -64
- K	5267764	REF	CABLE ASM- EXTERNAL V.35 FRANCE
- K	5267768	REF	CABLE ASM- A/C DUAL FAN FOR COMPONENT PARTS SEE INDICES -29,-36, -48A AND -55A

LIST P-12. CABLE ASSEMBLIES WITH COMPONENT PARTS (SHEET 4 OF 8)

FIGURE-INDEX NUMBER	PART NUMBER	UNITS PER ASM.	DESCRIPTION 1 2 3 4
12 - K	5267769	REF	CABLE ASM- A/C DUAL FAN (WT) FOR COMPONENT PARTS SEE INDICES -29, -54B,-55A,-55F AND -64 FOR COMPONENT PARTS SEE INDICES -10A, -15,-18A,-28,-41,-53 AND -55G
- L	5267773	REF	CABLE ASM- EXT L/L CNTRL 6 METERS FRANCE FOR COMPONENT PARTS SEE INDICES -10A, -15,-18A,-28,-41,-53 AND -55G
- L	5267774	REF	CABLE ASM- EXT L/L CNTRL 9 METERS FRANCE FOR COMPONENT PARTS SEE INDICES -10A, -15,-18A,-28,-41,-53 AND -55G
- L	5267775	REF	CABLE ASM- EXT L/L CNTRL 12METERS FRANCE FOR COMPONENT PARTS SEE INDICES -10A, -15,-18A,-28,-41,-53 AND-55G
- L	5267776	REF	CABLE ASM- EXT WT 1200 BPS IM SW A/A 3M FOR COMPONENT PARTS SEE INDICES -10A, -15,-18A,-28,-53 AND -55G
- L	5267777	REF	CABLE ASM- EXT WT 1200 BPS IM SW A/A 6M FOR COMPONENT PARTS SEE INDICES -10A, -15,-18A,-28,-53 AND -55G
- L	5267778	REF	CABLE ASM- EXT WT 1200 BPS IM SW A/A 9M FOR COMPONENT PARTS SEE INDICES -10A, -15,-18A,-28,-53 AND -55G
- L	5267779	REF	CABLE ASM- EXT WT 1200 BPS IM SW A/A 12M FOR COMPONENT PARTS SEE INDICES -10A, -15,-18A,-28,-53 AND -55G
- M	5267788	REF	CABLE ASM- EXT WT 1200 BPS SW A/A 3M FOR COMPONENT PARTS SEE INDICES -10A, -15,-18A,-28,-35,-55,-55B AND 55G
- M	5267789	REF	CABLE ASM- EXT WT 1200 BPS SW A/A 6M FOR COMPONENT PARTS SEE INDICES -10A, -15,-18A,-28,-35,-55,-55B AND 55G
- M	5267790	REF	CABLE ASM- EXT WT 1200 BPS SW A/A 9M FOR COMPONENT PARTS SEE INDICES -10A, -15,-18A,-28,-35,-55,-55B AND 55G
- M	5267791	REF	CABLE ASM- EXT WT 1200 BPS SW A/A 12M FOR COMPONENT PARTS SEE INDICES -10A, -15,-18A,-28,-35,-55,-55B AND -55G
- M	5267792	REF	CABLE ASM- EXT WT 1200 BPS NS/-SNBU 3M FOR COMPONENT PARTS SEE INDICES -10A, -15,-18A,-28,-35,-55,-55B AND -55G
- M	5267793	REF	CABLE ASM- EXT WT 1200 BPS NS/-SNBU 6M FOR COMPONENT PARTS SEE INDICES -10A, -15,-18A,-28,-35,-55,-55B AND -55G
- M	5267794	REF	CABLE ASM- EXT WT 1200 BPS NS/-SNBU 9M FOR COMPONENT PARTS SEE INDICES -10A, -15,-18A,-28,-35,-55,-55B AND -55G
- M	5267795	REF	CABLE ASM- EXT WT 1200 BPS NS/-SNBU 12M FOR COMPONENT PARTS SEE INDICES -10A, -15,-18A,-28,-35,-55,-55B AND -55G
- N	5267796	REF	CABLE ASM- EXT SW/L IM 3M FRANCE FOR COMPONENT PARTS SEE INDICES -10A, -15,-18A,-28,-41,-53 AND -55G
- N	5267797	REF	CABLE ASM- EXT SW/L IM 6M FRANCE FOR COMPONENT PARTS SEE INDICES -10A, -15,-18A,-28,-41,-53 AND -55G
- N	5267798	REF	CABLE ASM- EXT SW/L IM 9M FRANCE FOR COMPONENT PARTS SEE INDICES -10A, -15,-18A,-28,-41,-53 AND -55G
- N	5267799	REF	CABLE ASM- EXT SW/L IM 12M FRANCE FOR COMPONENT PARTS SEE INDICES -10A, -15,-18A,-28,-41,-53 AND -55G
- N	5267854	REF	CABLE ASM- TP R LOOP FOR COMPONENT PARTS SEE INDICES -8,-11, -16,-29 AND -33
- N	5267855	REF	CABLE ASM- TP-38LS DOM, W/T (L) FOR COMPONENT PARTS SEE INDICES -3,-8, -11,-16,-29,-33 AND -55A
- N	5267856	REF	CABLE ASM- MODEM 38 LS W/T & NON S/SNBU FOR COMPONENT PARTS SEE INDICES -3,-8, -11,-14,-16,-22A,-23A,-25,-29,-33,-48B AND -55A
- P	5267863	REF	JUMPER ASM- I/O PANEL GND FOR COMPONENT PARTS SEE INDICES -62 AND -57
- P	5267870	REF	CONNECTOR ASM- CRYPTO FOR COMPONENT PARTS SEE INDICES -21,-23,

LIST P-12. CABLE ASSEMBLIES WITH COMPONENT PARTS (SHEET 5 OF 8)

FIGURE-INDEX NUMBER	PART NUMBER	UNITS PER ASM.	DESCRIPTION 1 2 3 4
12			-25,-30,-34,-49,-63 AND -64
- P	5267878	REF	CABLE ASM- FAN WTC FOR COMPONENT PARTS SEE INDICES -29,-54,
- P	5267981	REF	CABLE ASM- OP'S FOR COMPONENT PARTS SEE INDICES -8,-14, -24A,-29 AND -51
- P	5699343	REF	CORDSET-POWER ATTACHMENT 10A AT 125VAC USA/CANADA(4,3M) W/O PLUG AND AFE OVER 200V
- P	5699344	REF	CORDSET-POWER ATTACHMENT 10A AT 125VAC USA/CANADA (1,8M)
- P	5699345	REF	CORDSET-POWER ATTACHMENT 10A AT 125VAC USA/CANADA(4,3M) A/AFE UNDER 200V EMEA WITH PLUG
- P	5699346	REF	CORDSET-POWER ATTACHMENT 10A AT 125VAC USA/CANADA (1,8M)
- P	5699347	REF	CORDSET-POWER ATTACHMENT 10A AT 125VAC A/AFE-UNDER 200V
- Q	5699348	REF	CORDSET-POWER ATTACHMENT 6A AT 250VAC A/AFE-OVER 200V (4,3M) WITH PLUG
- Q	5699349	REF	CORDSET-POWER ATTACHMENT 6A AT 250VAC EMEA WITH PLUG
- Q	5699350	REF	CORDSET-POWER ATTACHMENT 6A AT 250VAC EMEA WITH PLUG
- Q	5699351	REF	CORDSET-POWER ATTACHMENT 6A AT 250VAC EMEA WITH PLUG
- Q	5699352	REF	CORDSET-POWER ATTACHMENT 6A AT 250VAC EMEA WITH PLUG
- Q	5699353	REF	CORDSET-POWER ATTACHMENT 6A AT 250VAC EMEA WITH PLUG
- Q	5699354	REF	CORDSET-POWER ATTACHMENT 6A AT 250VAC A/AFE OVER 200V (4,3M) WITH PLUG (EMEA)
- Q	5699355	REF	CORDSET-POWER ATTACHMENT 6A AT 250VAC EMEA WITH PLUG (4,3M)
- Q	5699356	REF	CORDSET-POWER ATTACHMENT 6A AT 250VAC EMEA WITH PLUG (4,3M)
- Q	5699357	REF	CORDSET-POWER ATTACHMENT 6A AT 250VAC AFE WITH PLUG (HONG KONG)
- Q	5699511	REF	CABLE ASM- D/C DIST DUAL PWR SUPPLY (2 FAN) FOR COMPONENT PARTS SEE INDICES -16,-37, -29 AND -48B
- R	5699512	REF	CABLE ASM- D/C DIST DUAL PWR SUPPLY (2 FAN) FOR COMPONENT PARTS SEE INDICES -16,-29, -37 AND -48A
- R	5717968	REF	CABLE ASM- PWR ATTACHMENT 16A/250V (4.3M) NETHERLANDS FOR COMPONENT PARTS SEE INDICES -54 AND -55B
- R	5718110	REF	CABLE ASM- PWR ATTACHMENT 7.5A/250V (4.3M) NEW ZEALAND FOR COMPONENT PARTS SEE INDICES -54 AND -55B
- R	5718143	REF	ATTACHMENT CORD- 16A/250V (4,3M) AUSTRIA,BULGARIA,FINLAND,GERMANY, ICELAND,INDONESIA,IRAN,NORWAY,POLAND, PORTUGAL,ROMANIA,SPAIN AND SWEDEN FOR COMPONENT PARTS SEE INDICES -54 AND -55B
- R	5718146	REF	ATTACHMENT CORD- 10A/250V (4,3M) ARGENTINA,AUSTALIA,BRAZIL,CHILE, COLUMBIA,PARAGUAY,URUGUAY AND VENEZUELA FOR COMPONENT PARTS SEE INDICES -54 AND -55B
- S	5718147	REF	ATTACHMENT CORD- 10A/250V (4,3M) SWITZERLAND FOR COMPONENT PARTS SEE INDICES -54 AND -55B
- S	5718195	REF	CABLE ASM- X21-EXTENDER FOR COMPONENT PARTS SEE INDICES -2,-10, -11,-15 AND -29
- S	5718196	REF	CABLE ASM- EXT X-21 10FT (3,05M) FOR COMPONENT PARTS SEE INDICES -5,-10A, -18A,-28,-45,-46,-50A AND -55D
- S	5718197	REF	CABLE ASM- EXT X-21 20FT (6,1M) FOR COMPONENT PARTS SEE INDICES -5,-10A,

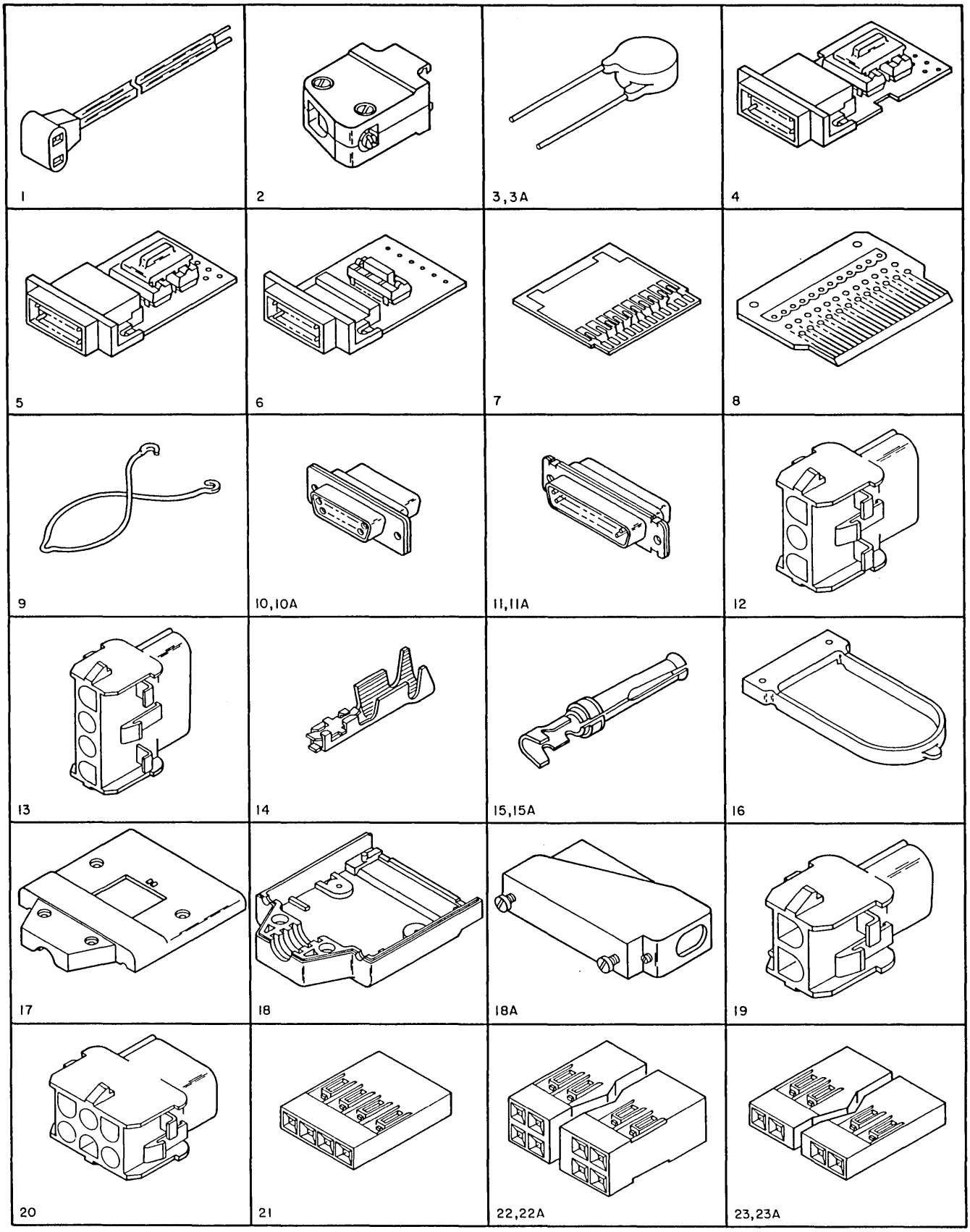

FIGURE P-12. CABLE ASSEMBLIES WITH COMPONENT PARTS (SHEET 1 OF 3, INDEX NOS. 1–23)

LIST P-12. CABLE ASSEMBLIES WITH COMPONENT PARTS (SHEET 6 OF 8)

FIGURE-INDEX NUMBER	PART NUMBER	UNITS PER ASM.	DESCRIPTION 1 2 3 4
12			-18A,-28,-45,-46,-50A AND -55D
- S	5718198	REF	CABLE ASM- EXT X-21 30FT (9,14M) FOR COMPONENT PARTS SEE INDICES -5,-10A,
- S	5718199	REF	CABLE ASM- EXT X-21 40FT (12,19M) FOR COMPONENT PARTS SEE INDICES -5,-10A, -18A,-28,-45,-46,-50A AND -55D
- S	5718262	REF	CABLE ASM- PWR ATTACHMENT 10A/250V (4,3M) HONG KONG FOR COMPONENT PARTS SEE INDICES -54 AND -55B
- T	5718296	REF	CABLE ASM- EXT DDSA 10FT (3,05M) FOR COMPONENT PARTS SEE INDICES -6,-10A, -15,-18A,-28,-45,-46,-47,-50A AND -55F
- T	5718297	REF	CABLE ASM- EXT DDSA 20FT (6,1M) FOR COMPONENT PARTS SEE INDICES -6,-10A, -15,-18A,-28,-45,-46,-47,-50A AND -55F
- T	5718298	REF	CABLE ASM- EXT DDSA 30FT (9,14M) FOR COMPONENT PARTS SEE INDICES -6,-10A, -15,-18A,-28,-45,-46,-47,-50A AND -55F
- T	5718299	REF	CABLE ASM- ANR ADAPTOR FOR COMPONENT PARTS SEE INDICES -6,-10A, -15,-18A,-28,-45,-46,-47,-50A AND -55F
- T	6814342	REF	CORDSET-POWER ATTACHMENT 10A AT 125VAC A/AFE-UNDER 200V (4,3M) AND OVER 200V WITHOUT PLUG
- T	6814343	REF	CORDSET-POWER ATTACHMENT 6A AT 250VAC (4,3M) A/AFE
- T	8115654	REF	CORDSET-POWER ATTACHMENT 6A AT 250VAC EMEA WITH PLUG (HOLLAND)
- 1	5213784	AR	. ATTACHMENT CORD- ROTRON FAN 115V AC
- 2	4943864	AR	. HOOD
- 3	4216001	AR	. VARISTOR
- 3A	4409572	AR	. CAPACITOR
- 4	1743589	AR	. CARD ASSEMBLY
- 5	5718107	AR	. CARD ASM
- 6	5718184	AR	. CARD ASM,SWITCH
- 7	5800530	AR	. CARD ASSEMBLY
- 8	5800634	AR	. CARD ASSEMBLY
- 9	5717466	AR	. CARD RETAINER
- 10	1608648	AR	. CONNECTOR,15 POS RECEP
- 10A	1655336	AR	. CONNECTOR, 25 POS. FEMALE
- 11	1608649	AR	. CONNECTOR, 15 POS PLUG
- 11A	1655338	AR	. CONNECTOR
- 12	1847527	AR	. CONNECTOR, 3 POS.
- 13	1847529	AR	. CONNECTOR, 4 POS.
- 14	2637682	AR	. CONNECTOR - DISCRETE
- 15	1655337	AR	. SOCKET,CONTACT 20-24 AWG
- 15A	6814349	AR	. SOCKET CONTACT- 24-28 AWG .06(1,52) MAX
- 16	5717926	AR	. HOLDER-CABLE
- 17	1743512	AR	. HOOD,CONNECTOR
- 18	1743513	AR	. HOOD,CONNECTOR
- 18A	5717874	AR	. HOOD,CONNECTOR- 90 DEG
- 19	1847525	AR	. HOUSING, 2 CIRCUIT
- 20	1847531	AR	. HOUSING, 6 CIRCUIT, UNIVERSAL
- 21	2637680	AR	. HOUSING
- 22	2731392	AR	. HOUSING, 2 X 8
- 22A	8324648	AR	. HOUSING- .100 CTR TO CTR SPACING
- 23	2731406	AR	. HOUSING,SIZE 1 X 10
- 23A	2731731	AR	. HOUSING, 1 X 6

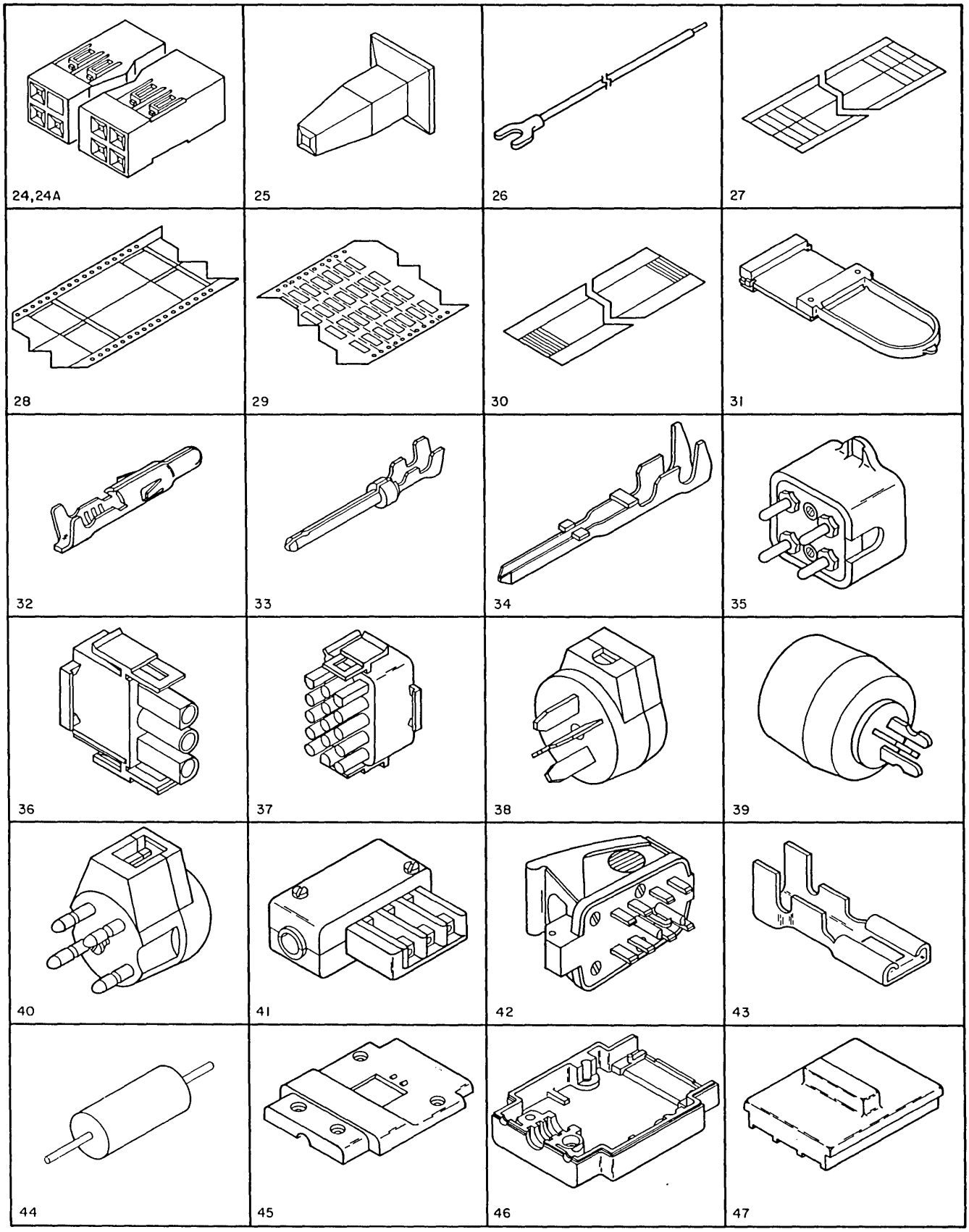

FIGURE P-12. CABLE ASSEMBLIES WITH COMPONENT PARTS (SHEET 2 OF 3, INDEX NOS. 24–47)

LIST P-12. CABLE ASSEMBLIES WITH COMPONENT PARTS (SHEET 7 OF 8)

FIGURE-INDEX NUMBER	PART NUMBER	UNITS PER ASM.	DESCRIPTION 1 2 3 4
12 - 24	2731845	AR	. HOUSING
- 24A	2731847	AR	. HOUSING, 2 X 16
- 25	2637689	AR	. INSERT- NYLON
- 26	7362770	AR	. JUMPER ASM- FINLAND
- 27	317296	AR	. LABEL-NUMBERING L TO R 1 THRU 33
- 28	483770	AR	. LABEL, CABLE IDENTIFICATION
- 29	811825	AR	. LABEL-CABLE
- 30	1563214	AR	. LABEL,CONN. - A/P1 THRU K/P5
- 31	5267721	AR	. PADDLE CARD
- 32	1471018	AR	. PIN,DUAL LANCE 14-20 AWG
- 33	1655339	AR	. PIN,CONTACT
- 34	2731384	AR	. PIN
- 35	341200	AR	. PLUG-TELEPHONE
- 36	1847526	AR	. PLUG, 3 CIRCUIT
- 37	1847536	AR	. PLUG 15 CIRCUIT UNIVERSAL
- 38	2767204	AR	. PLUG-TP NON SWITCHED FINLAND (4 POS)
- 39	2767205	AR	. PLUG-SWITCHED FINLAND (3 POS)
- 40	2767206	AR	. PLUG-TP SWITCHED NETHERLANDS (4 POS)
- 41	8276480	AR	. PLUG
- 42	4100182	AR	. PLUG-8 PRONG (MODEM)
- 43	1127037	AR	. RECEPTACLE,TAB- 0.755 LG
- 44	317089	AR	. RESISTOR,FXD COMP- 3.3K OHMS P/M 5% 2W
- 45	5718181	AR	. SHELL,UPPER
- 46	5718182	AR	. SHELL,LOWER
- 47	1743528	AR	. ACTUATOR,SLIDE-SWITCH

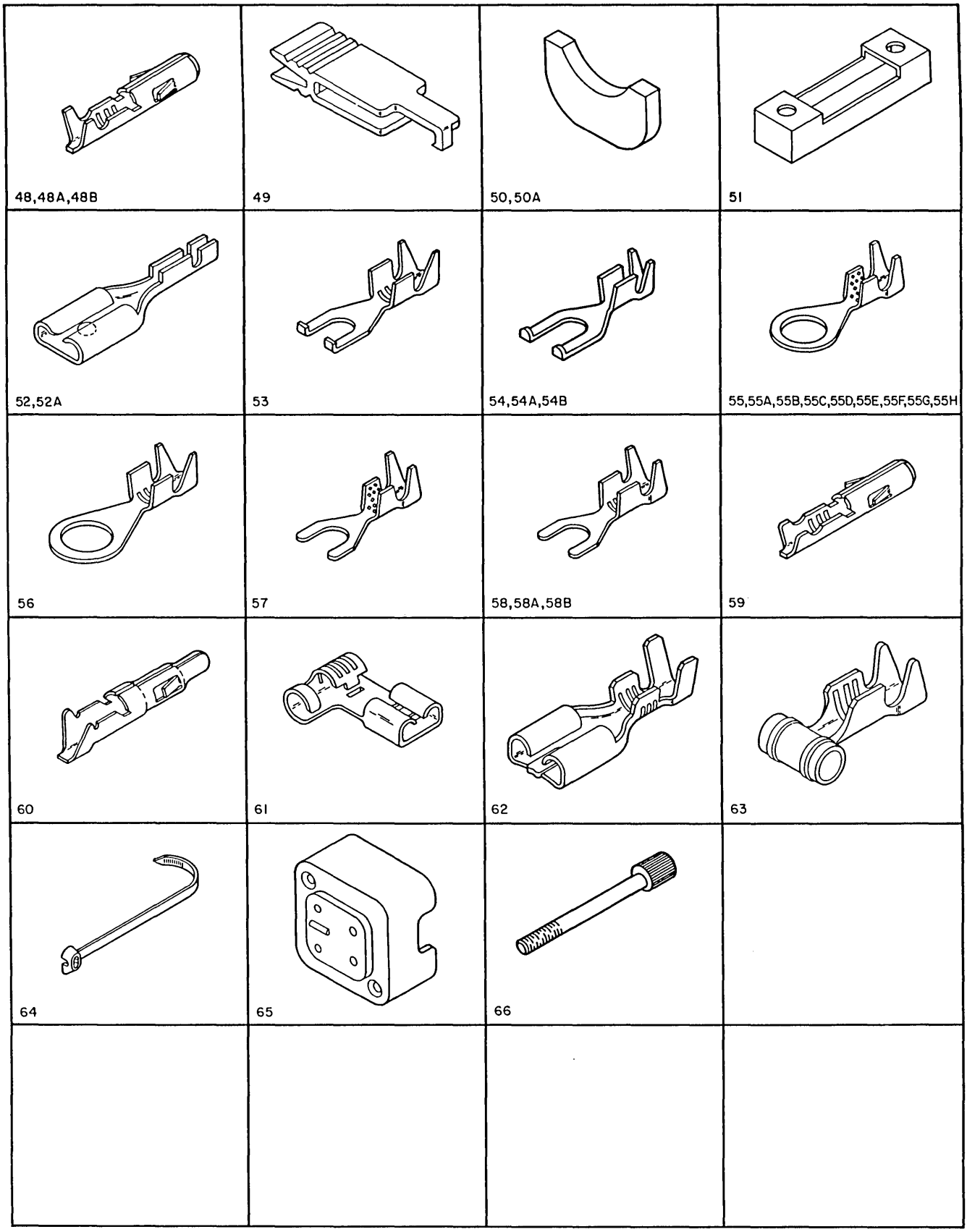

FIGURE P-12. CABLE ASSEMBLIES WITH COMPONENT PARTS (SHEET 3 OF 3, INDEX NOS. 48–65)

LIST P-12. CABLE ASSEMBLIES WITH COMPONENT PARTS (SHEET 8 OF 8)

FIGURE-INDEX NUMBER	PART NUMBER	UNITS PER ASM.	DESCRIPTION 1 2 3 4
12 - 48	1471019	AR	. SOCKET,DUAL LANCE 14-20 AWG
- 48A	1471027	AR	. SOCKET DUAL LANCE
- 48B	1471028	AR	. SOCKET,DUAL LANCE 14-20 AWG
- 49	1743055	AR	. STRAIN RELIEF
- 50	1743515	AR	. STRAIN RELIEF
- 50A	5718185	AR	. STRAIN RELIEF
- 51	5717486	AR	. STRAIN RELIEF
- 52	430798	AR	. TERMINAL-RECEPTACLE
- 52A	430801	AR	. TERMINAL-RECEPTACLE, 14-16 AWG
- 53	483648	AR	. TERMINAL, FL. SPADE 22-26 AWG NO. 6 STUD
- 54	483649	AR	. TERMINAL, FL. SPADE 18-20 AWG NO. 6 STUD
- 54A	483650	AR	. TERMINAL, FLANGED SPADE
- 54B	483664	AR	. TERMINAL, FL. SPADE 14-16 AWG NO. 6 STUD
- 55	483674	AR	. TERMINAL,RING-BRASS #4 STUD 22-26 AWG
- 55A	483677	AR	. TERMINAL,RING-BRASS #6 STUD 18-20 AWG
- 55B	483678	AR	. TERMINAL,RING- NO. 6
- 55C	483681	AR	. TERMINAL,RING- NO. 8
- 55D	483685	AR	. TERMINAL
- 55E	483686	AR	. TERMINAL,RING-BRASS #10 STUD 14-16 AWG
- 55F	483687	AR	. TERMINAL, RING
- 55G	483688	AR	. TERMINAL,RING
- 55H	483689	AR	. TERMINAL
- 56	483682	AR	. TERMINAL, RING - 14 TO 16 AWG
- 57	483646	AR	. TERM- STR SPADE NO 10 STUD,18 TO 20 AWG
- 58	483647	AR	. TERM- STR SPADE NO 10 STUD,14 TO 16 AWG
- 58A	483693	AR	. TERMINAL,STRAIGHT,NO. 4 STUD, 22-26 AWG
- 58B	483695	AR	. TERMINAL-SPADE
- 59	1661132	AR	. TERMINAL,DUAL LANCE 18-24 AWG
- 60	2451131	AR	. TERMINAL,PIN 16-18 AWG
- 61	2758578	AR	. TERMINAL
- 62	5252721	AR	. TERMINAL- .205 RECEPTACLE 18-22 AWG
- 63	5462535	AR	. TERMINAL,QUICK DISCONNECT-RIGHT ANGLE
- 64	5420242	AR	. TY-MINIATURE
- 65	5162880	AR	. TELEPHONE JACK- FEMALE
- 66	1743514	AR	. STUD,KNURLED

NUMERICAL INDEX

PART NO.	LIST AND INDEX NO.
5677	4 - 8
	4A- 11
6364	4 - 5
	4A- 5
9092	4 - 9
	4A- 12
	10 - 4A
10170	1 - 53
22478	7 - 8
35229	7 - 12
	8 - 21
37913	1 - 85
38264	1 - 84
38354	1 - 57
49374	10 - 5
56722	4 - 3
	4A- 7
67873	1 - 48
132808	1 - 78F
138754	1 - 65
	5 - 9A
177946	4 - 7
	4A- 1
210883	1 - 54
210884	1 - 55
244049	1 - 28
257187	4 - 6
	4A- 6
257986	4 - 4
	4A- 4
264641	3 - 2
317089	12 - 44
317232	1 - 56
317296	1 - 71
	12 - 27
322550	4 - 2A
	4A- 2
341200	12 - 35
361537	1 - 52
369207	1 - 34
	1 - 99
430798	12 - 52
430801	12 - 52A
438572	4 - 2
	4A- 3
483646	12 - 57
483647	12 - 58
483648	12 - 53
483649	12 - 54
483650	12 - 54A
483664	12 - 54B
483674	12 - 55
483677	12 - 55A
483678	12 - 55B
483680	1 - 78B
483681	1 - 70
	1 - 73
	1 - 78E
	12 - 55C
483682	1 - 74
	12 - 56
483685	12 - 55D
483686	12 - 55E
483687	12 - 55F
483688	12 - 55G
483689	12 - 55H
483693	12 - 58A
483695	12 - 58B
483770	12 - 28
512137	1 - 61
522849	1 - 58
522850	1 - 56
524519	1 - 78
	2 - 24A
736992	11 - 14
737858	1 - 42
760221	2 - 13
811417	2 - 28B
811427	2 - 5
811825	12 - 29

PART NO.	LIST AND INDEX NO.
813179	2 - 28A
818579	1 - 21
836008	7 - 9
855262	1 -104
855263	1 -104
855264	1 -104
855265	1 -104
855266	1 -104
855267	1 -104
855268	1 -104
855269	1 -104
855270	1 -104
855272	1 -104
855273	1 -104
855275	1 -104
855276	1 -104
855278	1 -104
855279	1 -104
855281	1 -104
855282	1 -101
855283	1 -102
855284	1 -103
855285	1 - 85A
855286	1 - 82
960746	1 -104
960766	1 - 82
1127037	12 - 43
1149561	1 - 61
1154429	11 - 10
1164976	11 - 11
1471018	12 - 32
1471019	12 - 48
1471027	12 - 48A
1471028	5 - 12
	12 - 48B
1563214	5 - 15
	5 - 24
	12 - 30
1589880	5 - 20
1608286	4 - 1A
1608648	12 - 10
1608649	12 - 11
1621061	1 - 9
1621170	1 - 80A
	9 - 4
	9 - 7
	9 - 11
1621178	1 - 41A
1621181	1 - 77A
1621182	1 - 16
1621190	10 - 10
1621192	7 - 7
1621193	8 - 2
	8 - 7
1621194	7 - 3
1621327	10 - 7
1621719	7 - 5
1621850	2 - 12
1622302	1 - 41B
	9 - 5
1622304	2 - 4
	2 - 17B
	11 - 5
1622305	3 - 2A
1622318	2 - 17A
1622334	1 - 20
1622344	1 - 80B
1622346	2 - 3
	11 - 6
1622347	1 - 50A
	1 - 67B
	1 -107
1622402	1 - 17
1622403	1 - 10
	1 - 76A
	2 - 2
	2 - 17
	11 - 4
1655336	12 - 10A
1655337	12 - 15

PART NO.	LIST AND INDEX NO.
1655338	12 - 11A
1655339	12 - 33
1655371	5 - 21
	5 - 28
1655386	5 - 10D
1655387	5 - 7
1661132	12 - 59
1673983	1 -106
1714951	12 - A
1714952	12 - A
1714953	12 - A
1714954	12 - A
1714960	12 - A
1714961	12 - A
1714962	12 - B
1714963	12 - B
1714970	12 - B
1714973	12 - B
1714974	12 - B
1714975	12 - B
1714976	12 - C
1714978	12 - C
1714979	12 - C
1714980	12 - C
1714981	12 - C
1714983	12 - C
1714984	12 - D
1714985	12 - D
1714986	12 - D
1714988	12 - D
1714989	12 - D
1714990	12 - D
1714991	12 - E
1714993	12 - E
1714994	12 - E
1714995	12 - E
1714996	12 - E
1730504	1 - 45
	1 - 49
1730905	1 - 46
1734231	1 - 43
1743055	12 - 49
1743126	2 - 15A
1743141	1 - 23
1743142	1 - 23
1743143	1 - 23
1743144	1 - 23
1743145	1 - 25
1743146	1 - 25
1743147	1 - 25
1743148	1 - 25
1743149	1 - 24
1743191	5 - 13
1743331	12 - E
1743332	12 - F
1743333	12 - F
1743334	12 - F
1743359	1 - 85A
1743455	1 - 77B
	5 - 8
1743456	5 - 4
1743512	12 - 17
1743513	12 - 18
1743514	12 - 66
1743515	12 - 50
1743528	12 - 47
1743531	12 - F
1743532	12 - F
1743533	12 - F
1743534	12 - G
1743548	1 - 34
	1 - 99
1743589	12 - 4
1743648	1 - 85A
1794410	1 - 22
1794411	1 - 22A
1794412	1 - 22B
1828817	1 - 51
1828818	1 - 51
1828819	1 - 51

PART NO.	LIST AND INDEX NO.
1847525	12 - 19
1847526	12 - 36
1847527	12 - 12
1847529	12 - 13
1847531	12 - 20
1847536	12 - 37
1860965	1 - 77
2181088	2 - 27
2305493	9 - 14
2451131	12 - 60
2462574	8 - 9
2462685	7 - 11
	7 - 15
	8 - 20
	10 - 2
2462686	6 - 2
	8 - 18
2549782	1 - 50
	1 - 67A
2565179	2 - 22
2565252	1 - 36
2565254	1 - 35
2565265	11 - 15
2596291	7 - 13
	9 - 15
2596293	1 - 37
2600562	1 - 44
2625096	1 - 59
2625097	1 - 60
2637680	5 - 27
	12 - 21
2637682	5 - 5
	5 - 17
	5 - 19
	5 - 26
	12 - 14
2637689	5 - 16
	5 - 25
	12 - 25
2682396	1 - 47
2682397	1 - 41
2731384	12 - 34
2731392	12 - 22
2731406	12 - 23
2731731	5 - 18
	12 - 23A
2731835	5 - 6
2731845	12 - 24
2731847	12 - 24A
2758578	12 - 61
2766967	1 - 85A
2767156	12 - G
2767157	12 - G
2767158	12 - G
2767159	12 - G
2767160	12 - G
2767161	12 - H
2767164	12 - H
2767165	12 - H
2767166	12 - H
2767204	12 - 38
2767205	12 - 39
2767206	12 - 40
4100182	12 - 42
4134830	1 - 22E
4176642	4 - 1
4177829	1 - 15
4201819	1 - 76B
4216001	12 - 3
4236454	1 - 69
4240504	1 - 18
	6 -REF
4240505	1 - 18
	6 -REF
4240508	1 - 18
	6 -REF
4240509	1 - 18
	6 -REF
4240512	1 - 18
	6 -REF

NUMERICAL INDEX

PART NO.	LIST AND INDEX NO.
4240513	1 - 18
	6 -REF
4240516	1 - 18
	6 -REF
4240517	1 - 18
	6 -REF
4240551	10 - 11
4240552	10 - 9
4240555	10 - 8
4240556	10 - 6
4240557	10 - 3
4240573	9 - 2
4240574	8 - 17
4240576	8 - 17
4240580	8 - 10
4240582	8 - 8
4240583	8 - 8
4240584	6 - 3
4240589	8 - 13
4240592	8 - 14
4240593	10 - 1
4240594	9 - 13
4240596	9 - 10
4240599	9 - 12
4240600	9 - 6
4240601	9 - 8
4240604	7 - 1
4240605	7 - 1
4240610	7 - 16
4240614	8 - 11
4240615	9 - 3
4240620	9 - 3
4240631	8 - 5
4240632	8 - 15
4240638	6 - 1
4240644	8 - 12
4240648	9 - 1
4240659	8 - 6
4240661	8 - 3
4240662	8 - 3
4240663	8 - 16
4240666	7 - 14
4240667	7 - 14
4240671	7 - 2
4240673	7 - 4
4240675	7 - 4
4240677	7 - 6
4240679	7 - 6
4240681	7 - 10
4240683	8 - 1
4240684	8 - 1
4240687	8 - 12
4240724	6 - 4
4240726	6 - 4
4364729	8 - 4
4406240	1 - 64
4406241	1 - 64
4406242	1 - 64
4406243	1 - 64
4406244	1 - 64
4406245	1 - 64
4406501	4 - 1A
4407057	4 - 4A
4409554	5 - 10E
4409572	12 - 3A
4418722	1 - 65
	5 - 9A
4420467	1 - 65
	5 - 9A
4423063	1 - 38B
	4 - 13
	5 - 9C
4423212	1 - 34
	1 - 99
4423216	1 - 6
4429941	2 - 16
4430074	2 - 15C
4716642	4A- 17
4796654	1 - 19
4885618	1 - 61
4942502	1 - 64
4943864	12 - 2
5162880	12 - 65
5213784	12 - 1
5241434	2 - 26
5241439	2 - 25
5252721	12 - 62
5261398	1 - 58
5267705	1 - 91
5267708	1 - 89
5267709	1 - 97
5267711	1 - 95
5267712	1 - 96
5267717	1 - 93
5267718	1 - 78D
5267719	1 - 90
5267721	12 - 31
5267726	5 - 10
5267729	12 - H
5267733	1 -109
	4 - 13A
	12 - H
5267734	12 - J
5267735	12 - J
5267736	12 - J
5267737	2 - 32
	12 - J
5267739	2 - 32
	12 - J
5267740	12 - J
5267741	1 - 79
	12 - J
5267743	2 - 32
	12 - K
5267744	2 - 32
	12 - K
5267745	12 - K
5267748	1 - 79
	12 - K
5267749	2 - 32
	12 - K
5267750	5 - 33
5267751	5 - 32
5267753	5 - 29
5267758	5 - 10
5267764	12 - K
5267768	12 - K
5267769	12 - K
5267772	12 - K
5267773	12 - L
5267774	12 - L
5267775	12 - L
5267776	12 - L
5267777	12 - L
5267778	12 - L
5267779	12 - L
5267785	1 - 22D
5267787	1 - 22C
5267788	12 - M
5267789	12 - M
5267790	12 - M
5267791	12 - M
5267792	12 - M
5267793	12 - M
5267794	12 - M
5267795	12 - M
5267796	12 - N
5267797	12 - N
5267798	12 - N
5267799	12 - N
5267800	1 -REF
5267803	1 - 7
	5 -REF
5267810	1 -108
	11 -REF
5267811	11 - 12
5267812	11 - 13
5267813	11 - 16
5267814	1 - 1
	11 - 2
5267817	1 - 63
5267818	1 - 63
5267820	2 - 31
	3 -REF
5267821	3 - 16
5267822	3 - 15
5267823	2 - 23
5267824	2 - 28
5267825	2 - 29
5267826	3 - 8
5267829	2 - 24
5267830	1 - 14
5267831	1 - 13
5267832	1 - 8
5267835	1 - 80
5267836	1 - 67
5267837	2 - 15
5267842	1 - 33
5267843	2 - 18
5267844	1 - 88
5267845	1 - 39
	4 -REF
5267846	1 - 39
	4 -REF
5267847	5 - 30
5267848	5 - 31
5267849	1 - 11
5267850	11 - 3
5267851	3 - 3
5267852	3 - 4
5267853	3 - 11
5267854	12 - N
5267855	12 - N
5267856	12 - N
5267861	1 - 67
5267862	1 - 72
5267863	12 - P
5267864	5 - 9
5267865	4 - 14
5267866	5 - 14
5267867	5 - 22
5267868	5 - 22
5267869	5 - 23
5267870	5 - 3
	12 - P
5267871	1 - 3
5267872	1 - 85B
5267873	1 - 3
5267874	1 - 85B
5267876	3 - 9
5267877	3 - 6
5267878	4 - 13A
	12 - P
5267879	5 - 2
5267880	4 - 12
5267881	1 - 81
5267882	1 - 81
5267883	1 - 81
5267884	1 - 81
5267885	1 - 81
5267886	1 - 81
5267887	1 - 81
5267888	1 - 81
5267889	1 - 81
5267890	1 - 81
5267891	1 - 81
5267892	1 - 81
5267893	1 - 81
5267894	1 - 81
5267895	1 - 81
5267896	1 - 81
5267897	5 - 9
5267898	5 - 9
5267899	5 - 9
5267900	5 - 9
5267901	5 - 9
5267902	5 - 9
5267920	1 - 83
5267921	1 - 83
5267922	1 - 83
5267923	1 - 83
5267924	1 - 83
5267925	1 - 83
5267926	1 - 83
5267927	1 - 83
5267928	1 - 87
5267930	2 - 11
5267931	2 - 1
5267933	3 - 1
5267935	1 - 35A
5267936	1 - 38
5267937	11 - 8
5267938	11 - 7
5267939	11 - 1
5267940	1 - 13A
5267944	1 - 76
5267945	1 - 68
5267946	1 - 78A
5267947	1 - 80
5267948	2 - 30A
5267949	3 - 13
5267950	2 - 30A
5267951	2 - 30A
5267952	2 - 30B
5267953	2 - 30A
5267954	2 - 30A
5267955	2 - 30A
5267956	2 - 30A
5267957	2 - 15B
	2 - 17C
5267962	2 - 30A
5267963	2 - 30A
5267970	1 - 85A
5267978	5 - 10
5267979	1 - 39
	4 -REF
5267980	2 - 30A
5267981	12 - P
5267983	1 -100
5267984	1 - 31A
5267986	2 - 18B
5267987	2 - 18A
5267992	5 - 10
5267993	5 - 10
	5 - 14
5277768	4A- 15
5277769	4A- 15
5350012	3 - 14
5420242	2 - 14
	4A- 14
	12 - 64
5462535	12 - 63
5562019	8 - 19
	9 - 9
5562071	10 - 4
5616104	1 - 78C
5643329	2 - 30
5643330	2 - 30
5646070	2 - 19
	2 - 20
5667043	1 - 30
5667044	1 - 30
5667093	1 - 26
5667094	1 - 26
5685244	1 - 34
	1 - 99
5699190	1 - 2
5699191	1 - 2
5699192	1 - 2
5699194	1 - 2
5699196	1 - 2
5699197	1 - 2
5699198	1 - 2
5699200	1 - 2
5699202	1 - 2
5699203	1 - 2
5699204	1 - 2
5699206	1 - 2
5699208	1 - 2
5699209	1 - 2

NUMERICAL INDEX

PART NO.	LIST AND INDEX NO.
5699210	1 - 2
5699211	1 - 2
5699212	1 - 2
5699214	1 - 2
5699215	1 - 2
5699216	1 - 2
5699218	1 - 2
5699220	1 - 2
5699221	1 - 2
5699222	1 - 2
5699223	1 - 2
5699224	1 - 2
5699226	1 - 2
5699227	1 - 2
5699228	1 - 2
5699230	1 - 2
5699232	1 - 2
5699233	1 - 2
5699234	1 - 2
5699236	1 - 2
5699238	1 - 5
5699239	1 - 5
5699240	1 - 5
5699241	1 - 5
5699242	1 - 5
5699245	1 - 5
5699246	1 - 5
5699247	1 - 5
5699248	1 - 5
5699251	1 - 5
5699252	1 - 5
5699253	1 - 5
5699254	1 - 5
5699257	1 - 5
5699258	1 - 5
5699259	1 - 5
5699260	1 - 5
5699263	1 - 5
5699264	1 - 5
5699265	1 - 5
5699266	1 - 5
5699269	1 - 5
5699270	1 - 5
5699271	1 - 5
5699272	1 - 5
5699275	1 - 5
5699276	1 - 5
5699277	1 - 5
5699278	1 - 5
5699281	1 - 5
5699282	1 - 5
5699283	1 - 5
5699284	1 - 5
5699343	12 - P
5699344	12 - P
5699345	12 - P
5699346	12 - P
5699347	12 - P
5699348	12 - Q
5699349	12 - Q
5699350	12 - Q
5699351	12 - Q
5699352	12 - Q
5699353	12 - Q
5699354	12 - Q
5699355	12 - Q
5699356	12 - Q
5699357	12 - Q
5699454	1 - 32
	2 -REF
5699455	1 - 32
	2 -REF
5699456	1 - 32
	2 -REF
5699501	4A- 8
5699502	4A- 16
5699503	4A- 10
5699504	1 - 39
	4A-REF
5699505	1 - 39
5699505-CONT	4A-REF
5699506	1 - 39
	4A-REF
5699511	12 - Q
5699512	12 - R
5699513	4A- 17
5699514	1 - 92
	1 - 94
	1 - 98
5699522	11 - 15A
5699634	1 - 32
	2 -REF
5699635	1 - 32
	2 -REF
5699828	2 - 30
5717466	1 - 27
	12 - 9
5717473	4 - 10
	4A- 13
5717483	4 - 11
	4A- 9
5717486	1 - 29
5717874	12 - 18A
5717926	12 - 16
5717968	12 - R
5718107	12 - 5
5718110	12 - R
5718143	12 - R
5718146	12 - R
5718147	12 - S
5718181	12 - 45
5718182	12 - 46
5718184	12 - 6
5718185	12 - 50A
5718195	12 - S
5718196	12 - S
5718197	12 - S
5718198	12 - S
5718199	12 - S
5718217	1 - 4
5718262	12 - S
5718296	12 - T
5718297	12 - T
5718298	12 - T
5718299	12 - T
5718343	1 -100
5718360	1 - 86
5718367	1 - 61
5718477	1 -100
5718478	1 -100
5718479	1 -100
5718480	1 -100
5718481	1 -100
5718482	1 -100
5718483	1 - 64
5718486	12 - 51
5800530	12 - 7
5800634	12 - 8
5827470	1 - 52
5865679	1 -107A
6812828	1 - 65
	5 - 9A
6812829	1 - 65
	5 - 9A
6812830	1 - 65
	5 - 9A
6812831	1 - 66
	5 - 9B
6812832	1 - 65
	5 - 9A
6814329	5 - 10A
6814331	5 - 10C
6814332	5 - 10B
6814340	5 - 11
6814342	12 - T
6814343	12 - T
6814345	1 - 75
6814349	12 - 15A
6814398	5 - 1
6815180	1 - 34
6815180-CONT	1 - 99
6815181	1 - 34
	1 - 99
6815182	1 - 34
	1 - 99
6815183	1 - 34
	1 - 99
6815188	1 - 65
	5 - 9A
6815193	1 - 34
	1 - 99
6815209	1 - 6
6815210	1 - 6
6815211	1 - 6
6815262	1 - 6
6815263	1 - 6
6815265	1 - 6
6815266	1 - 6
6825818	1 - 65
	5 - 9A
6825826	1 - 64
6825840	1 - 65
	5 - 9A
6835647	1 - 85A
6835762	1 - 85A
6837984	4 - 1
	4A- 17
7362130	3 - 10
7362385	1 - 12
	1 - 31
	1 - 38A
	1 - 40
	1 -105
	2 - 18C
	2 - 21
	3 - 5
	3 - 7
	3 - 12
	11 - 9
	11 - 15B
7362770	12 - 26
8112300	1 -103
8112301	1 - 85A
8112302	1 - 85A
8115654	12 - T
8276480	12 - 41
8324648	12 - 22A
8326797	1 - 34
	1 - 99
8326801	1 - 34
	1 - 99
8329451	1 - 64
8331675	1 - 85C
8331676	1 - 85C
8331677	1 - 85C
8331678	1 - 85C
8331679	1 - 85C
8331680	1 - 85C
8551901	1 - 64
8551903	1 - 65
	5 - 9A
8551904	1 - 34
	1 - 99

SY27-2513-4

3274 Control Unit Models 51C and 52C Maintenance Information Printed in U.S.A. SY27-2513-4

IBM®