CONNECTOR_1

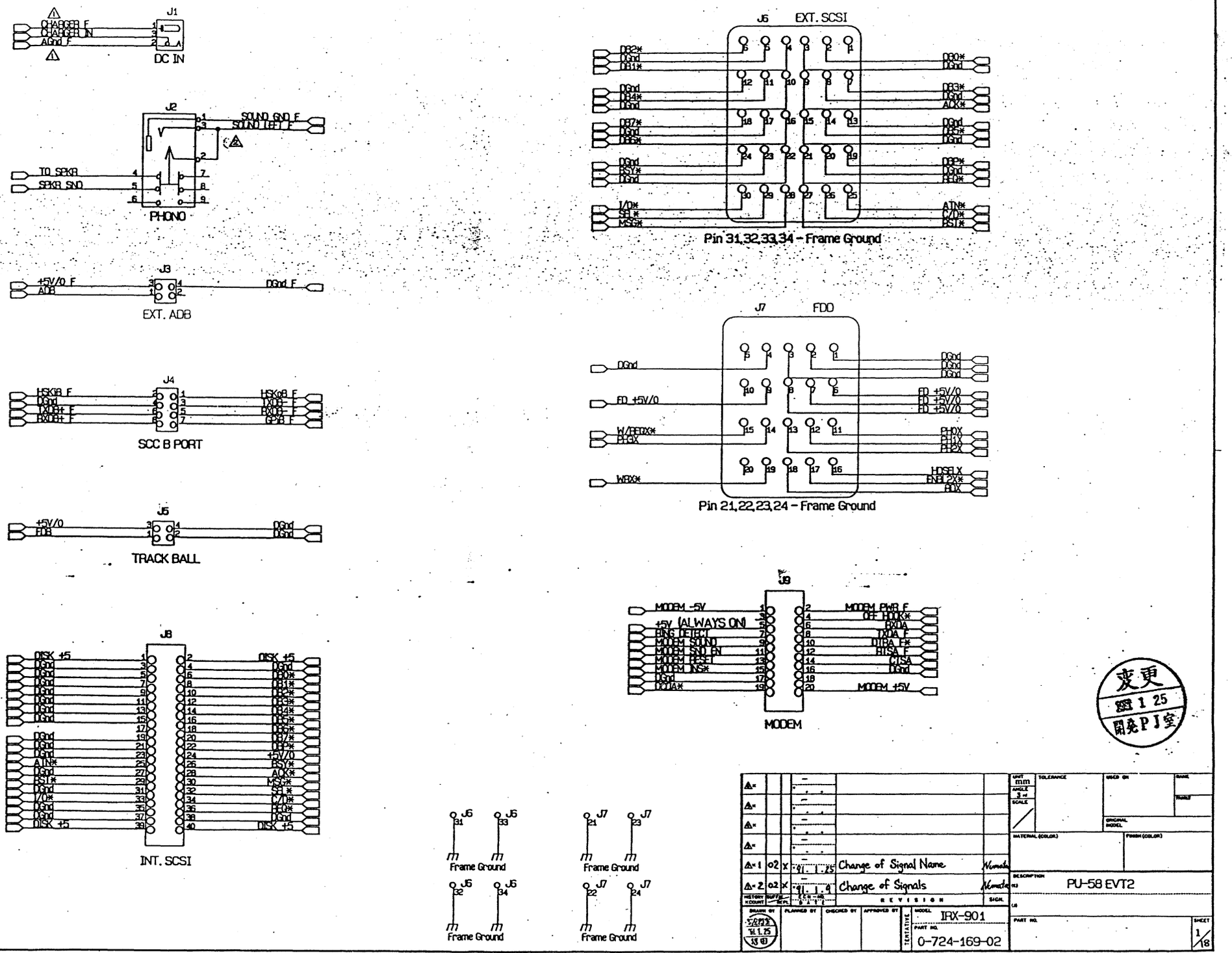

変更
1 25
開発PJ室

2	02	X	91. 1. 25	Change of Signal Name	Nomata
1	02	X	91. 1. 4	Change of Signals	Nomata

REVISION

DRAWN BY 91.1.25 | PLANNED BY | CHECKED BY | APPROVED BY

MODEL IRX-901

PART NO. 0-724-169-02

DESCRIPTION PU-58 EVT2

SHEET 1/18

ISSUED REVISED

A2

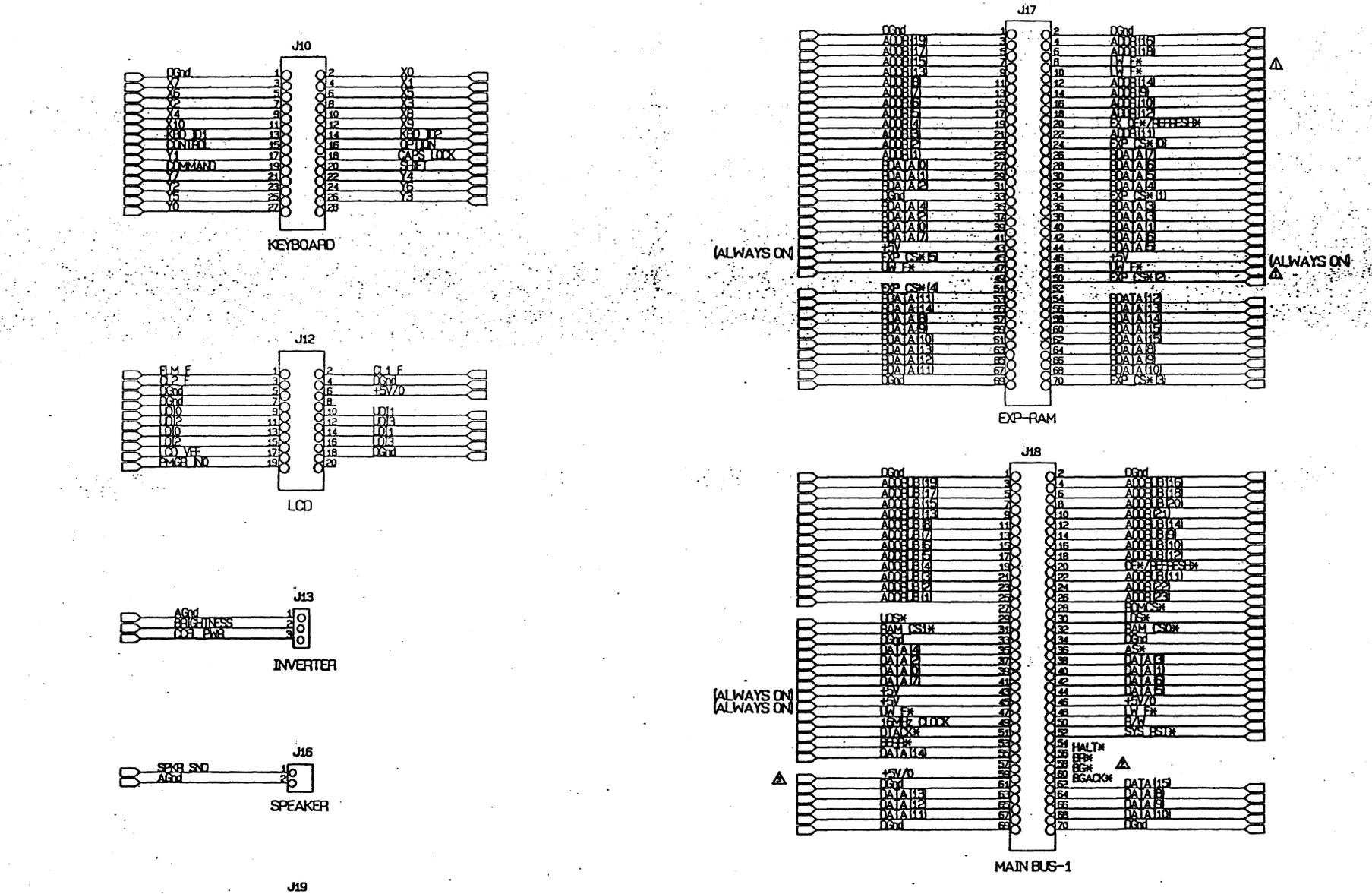

変更
91 1 25
開発PJ室

△×					
△×					
△×					
△×3	02	X	91.1.25	Change of Signals	Hamada
△×1	02	X	91.1.18	Elimination of Nodes	Hamada
△×2	02	X	91.1.18	Change of Signals	Hamada
HISTORY	SUFFIX	ECN-NO.		REVISION	SIGN.
K'COUNT	REV.	9 1 1 1			

DRAWN BY: PEM 91.1.25 / 15 (1)
PLANNED BY
CHECKED BY
APPROVED BY
TENTATIVE
MODEL: IRX-901
PART NO.: 0-724-169-02

UNIT: mm
ANGLE: 3 ±
SCALE: /
TOLERANCE
USED ON
RANK
FAMILY
ORIGINAL MODEL
MATERIAL (COLOR)
FINISH (COLOR)
DESCRIPTION: PU-58 EVT2
MJ
LB
PART NO.
SHEET 2 / 18

A2

MISC. GLU

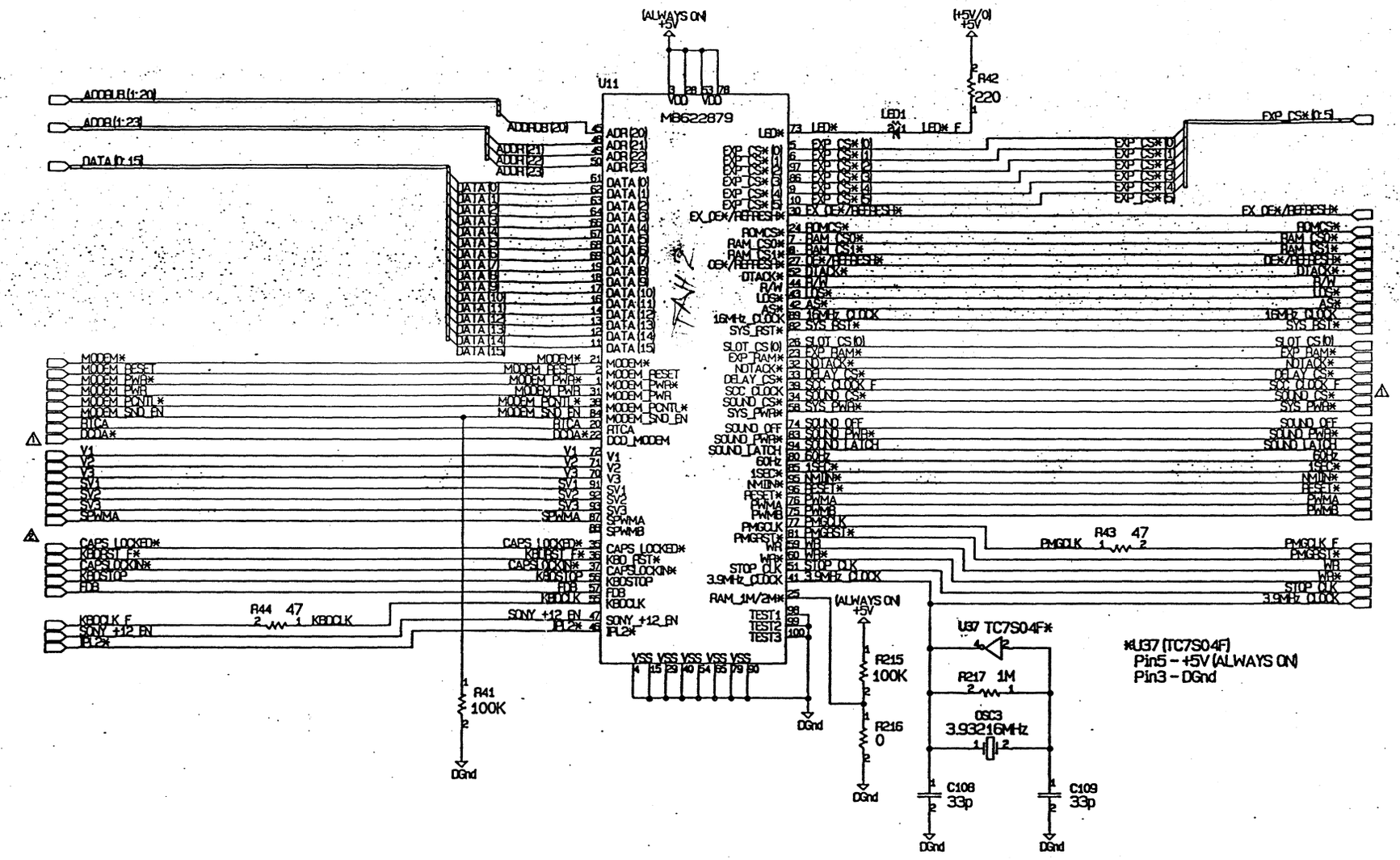

出圖
2001.12.28
開發PJ室

△-1	02	K	91.1.18	Elimination of Node	Hamada
△-2	02	K	91.1.18	Correction of Signal's Name	Hamada

REVISION

DRAWN BY: 91.1.18 | PLANNED BY | CHECKED BY | APPROVED BY

TENTATIVE

MODEL: IRX-901

PART NO. 0-724-169-02

DESCRIPTION: PU-58 EVT2

SHEET 3/18

A2

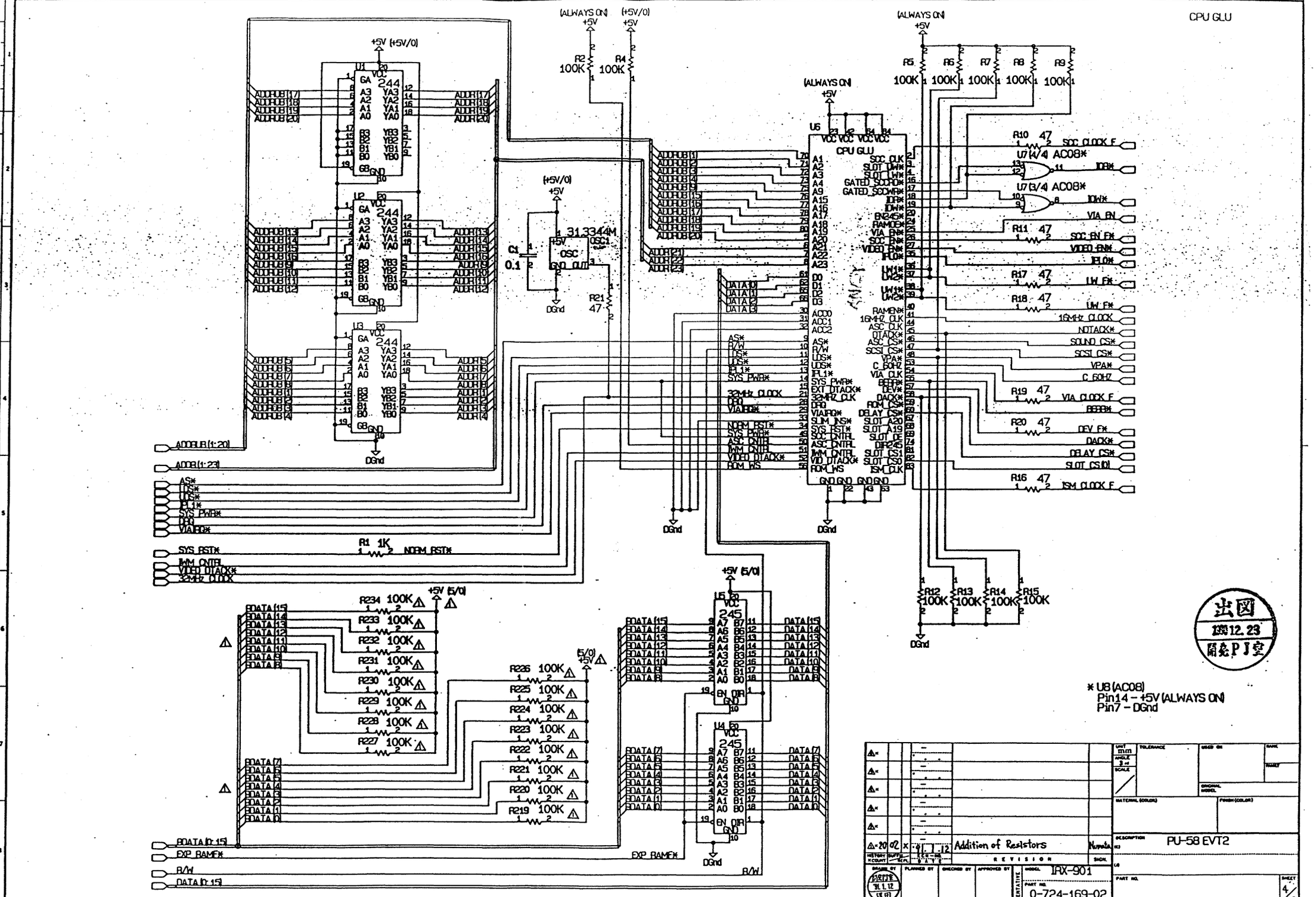
CPU GLU
(ALWAYS ON) +5V
(+5V/0) +5V
+5V (+5V/0)
U1 244
U2 244
U3 244
U5 245
U4 245
U6 CPU GLU
U7(4/4) AC08*
U7(3/4) AC08*
OSC 31.3344M
C1 0.1
R21 47
R1 1K
NORM_RST*
R2 100K
R4 100K
R5 100K
R6 100K
R7 100K
R8 100K
R9 100K
R10 47
R11 47
R17 47
R18 47
R19 47
R20 47
R16 47
R12 100K
R13 100K
R14 100K
R15 100K
R234 100K
R233 100K
R232 100K
R231 100K
R230 100K
R229 100K
R228 100K
R227 100K
R226 100K
R225 100K
R224 100K
R223 100K
R222 100K
R221 100K
R220 100K
R219 100K
ADDRUB[1:20]
ADDR[1:23]
DATA[0:15]
EXP_RAMEN*
R/W
DGnd
SOC_CLOK_F
IOR*
IOW*
VIA_EN
SOC_EN_F*
VIDEO_EN*
IPL0*
LW_F*
UW_F*
16MHz_CLOCK
NOTACK*
SOUND_CS*
SCSI_CS*
VPA*
C_60HZ
VIA_CLOCK_F
BERR*
DEV_F*
DACK*
DELAY_CS*
SLOT_CS(0)
ISM_CLOCK_F
出図
1993.12.23
開発PJ室
* U8 (AC08)
Pin14 – +5V (ALWAYS ON)
Pin7 – DGnd
Addition of Resistors
PU-58 EVT2
IRX-901
0-724-169-02
A2
4/18

VIDEO

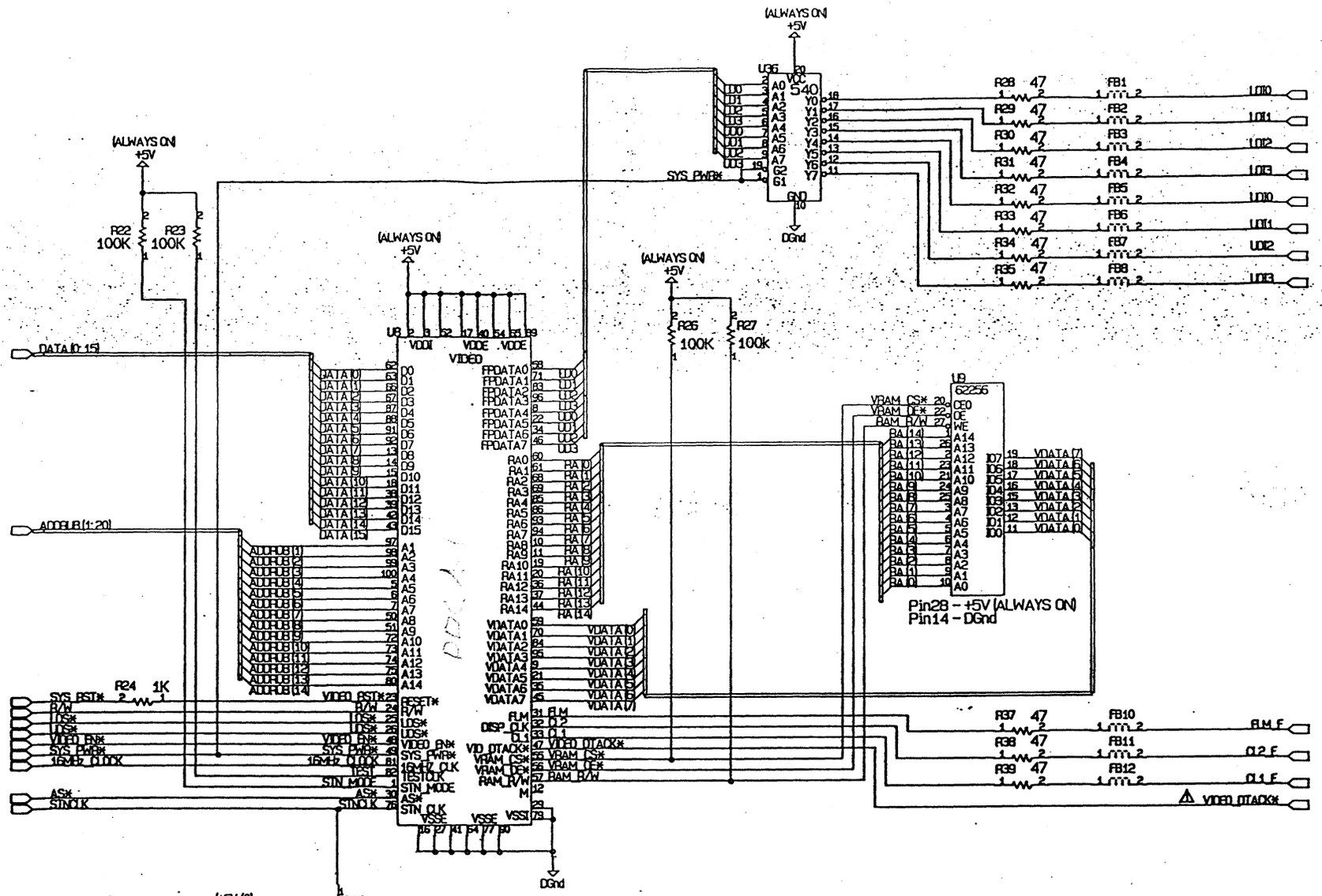

出図
H12.2.28
開発PJ室

⚠×					
⚠×					
⚠×					
⚠×					
⚠×					
⚠×1	02	K	11 1 18	Correction of Signal's Name	Nakata

REVISION

UNIT mm | TOLERANCE | USED ON | NAME | DATE | SCALE | ORIGINAL MODEL | MATERIAL (COLOR) | FINISH (COLOR)

DESCRIPTION PU-58 EVT2

MODEL IRX-901

PART NO. 0-724-169-02

SHEET 5/18

DRAWN BY | PLANNED BY | CHECKED BY | APPROVED BY | TENTATIVE

A2

SOUND INTERFACE

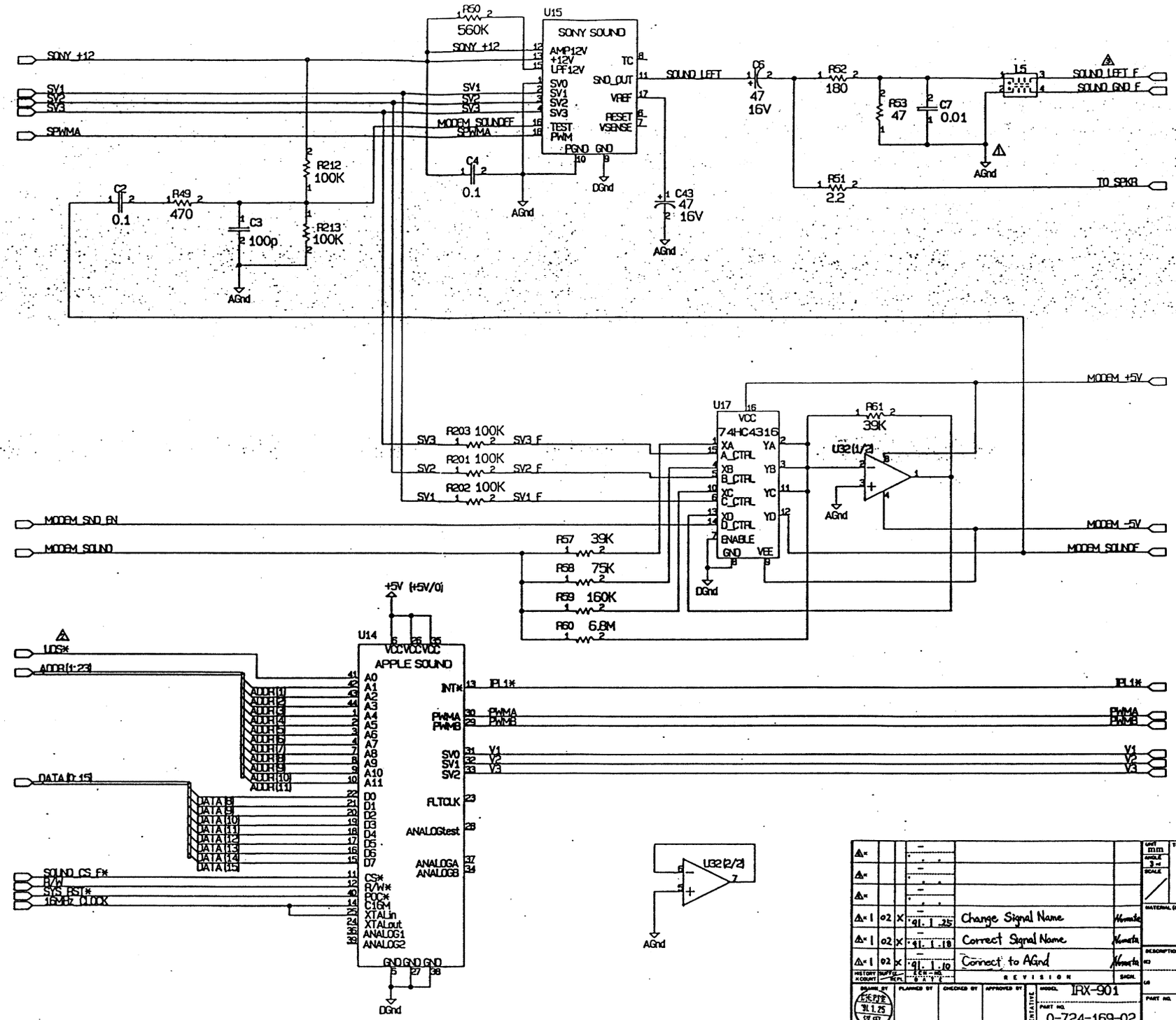

⚠x					
⚠x					
⚠x					
⚠x1	02	X	91.1.25	Change Signal Name	Nomura
⚠x1	02	X	91.1.18	Correct Signal Name	Nomura
⚠x1	02	X	91.1.10	Connect to AGnd	Nomura
HISTORY COUNT	SUFFIX	ECN-NO.		REVISION	SIGN.

DRAWN BY 91.1.25	PLANNED BY	CHECKED BY	APPROVED BY	TENTATIVE

MODEL IRX-901

PART NO. 0-724-169-02

UNIT mm | ANGLE | SCALE | TOLERANCE | USED ON | RANK | MASS | ORIGINAL MODEL | MATERIAL (COLOR) | FINISH (COLOR)

DESCRIPTION PU-58 EVT2

PART NO.

SHEET 6/18

変更 91.1.25 関西PJ室

A2

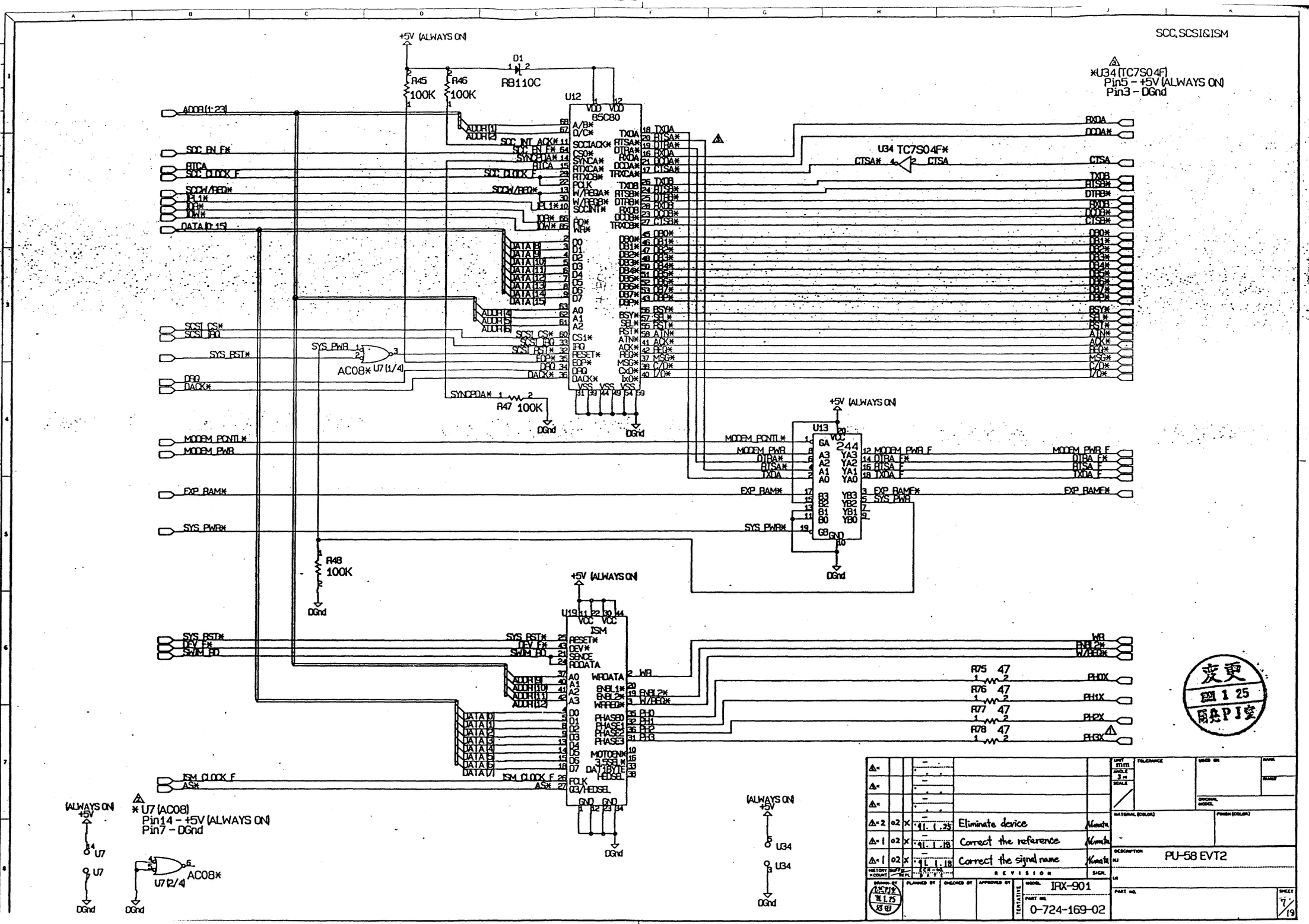
SCC,SCSI&ISM
+5V (ALWAYS ON)
D1
RB110C
R45 100K
R46 100K
U12
85C80
ADDR(1:23)
SCC_EN_F*
BTCA
SCC_CLOCK_F
SCCH/REQ*
PL1*
DR*
DW*
DATA(0:15)
SCSI_CS*
SCSI_IRQ
SYS_RST*
DRQ
DACK*
SYS_PWR
AC08* U7(1/4)
SYNCPDA*
R47 100K
DGnd
MODEM_PONTL*
MODEM_PWR
EXP_RAM*
SYS_PWR*
R48 100K
U13
244
MODEM_PWR_F
DTRA_F*
RTSA_F
TXDA_F
EXP_RAMF*
U19
ISM
SYS_RST*
DEV_F*
SWM_RD
ISM_CLOCK_F
AS*
WR
ENBL2*
W/REQ*
R75 47
R76 47
R77 47
R78 47
PH0X
PH1X
PH2X
PH3X
U34 TC7S04F*
CTSA*
CTSA
RXDA
DCDA*
TXDB
RTSB*
DTRB*
RXDB
DCDB*
CTSB*
DB0*
DB1*
DB2*
DB3*
DB4*
DB5*
DB6*
DB7*
DBP*
BSY*
SEL*
RST*
ATN*
ACK*
REQ*
MSG*
C/D*
I/O*
*U34 (TC7S04F)
Pin5 - +5V (ALWAYS ON)
Pin3 - DGnd
*U7 (AC08)
Pin14 - +5V (ALWAYS ON)
Pin7 - DGnd
(ALWAYS ON)
U7
U7 (2/4)
AC08*
U34
Eliminate device
Correct the reference
Correct the signal name
PU-58 EVT2
IRX-901
0-724-169-02
7/19
変更
図125
BPI室

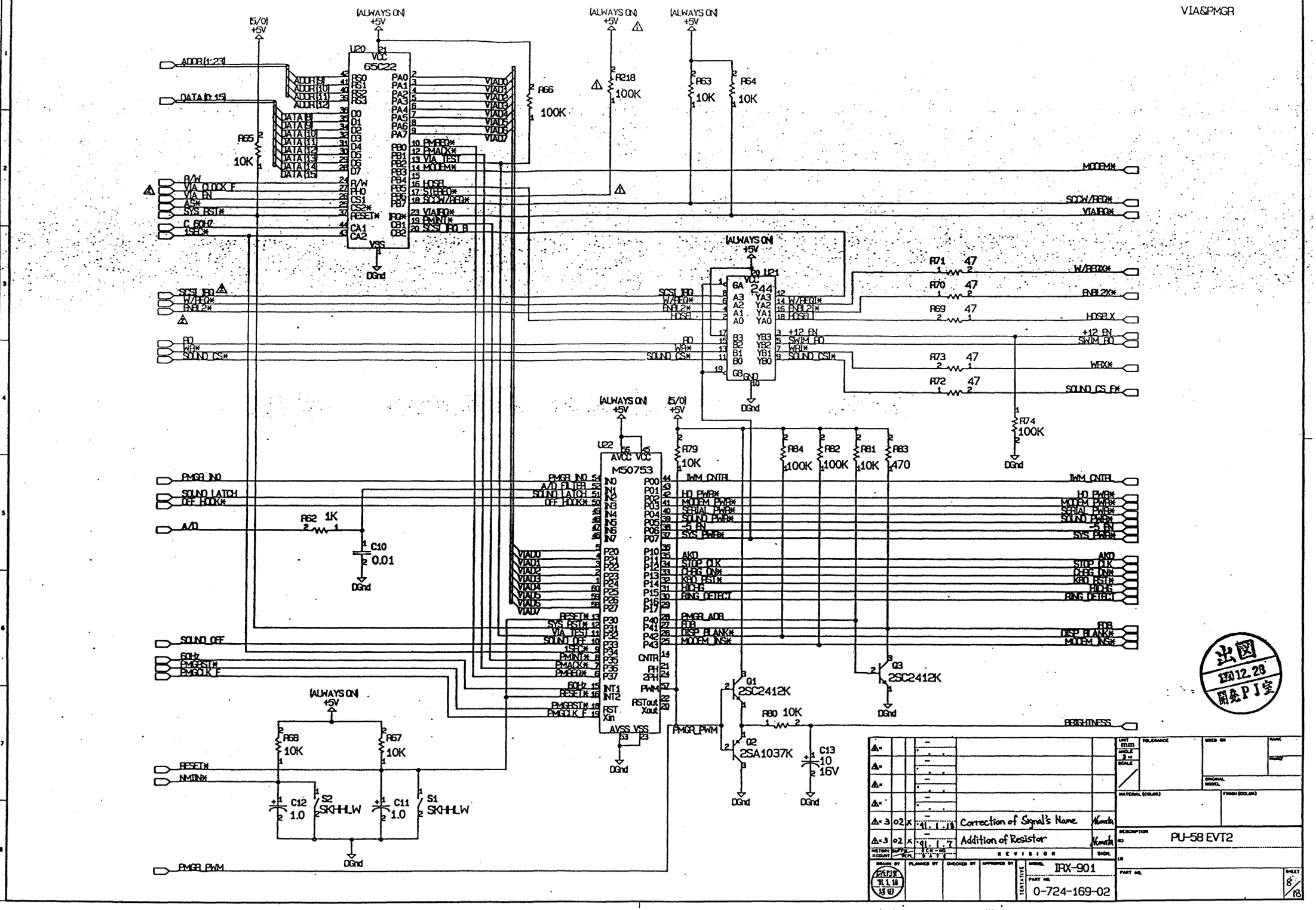

△×				
△×				
△×				
△×				
△×3	02	X	91.1.18	Correction of Signal's Name
△×3	02	X	91.1.7	Addition of Resistor

REVISION

DRAWN BY: 91.1.18

PLANNED BY | CHECKED BY | APPROVED BY

MODEL: IRX-901

PART NO.: 0-724-169-02

UNIT: mm

DESCRIPTION: PU-58 EVT2

SHEET 8/18

A2

SERIAL INTERFACE

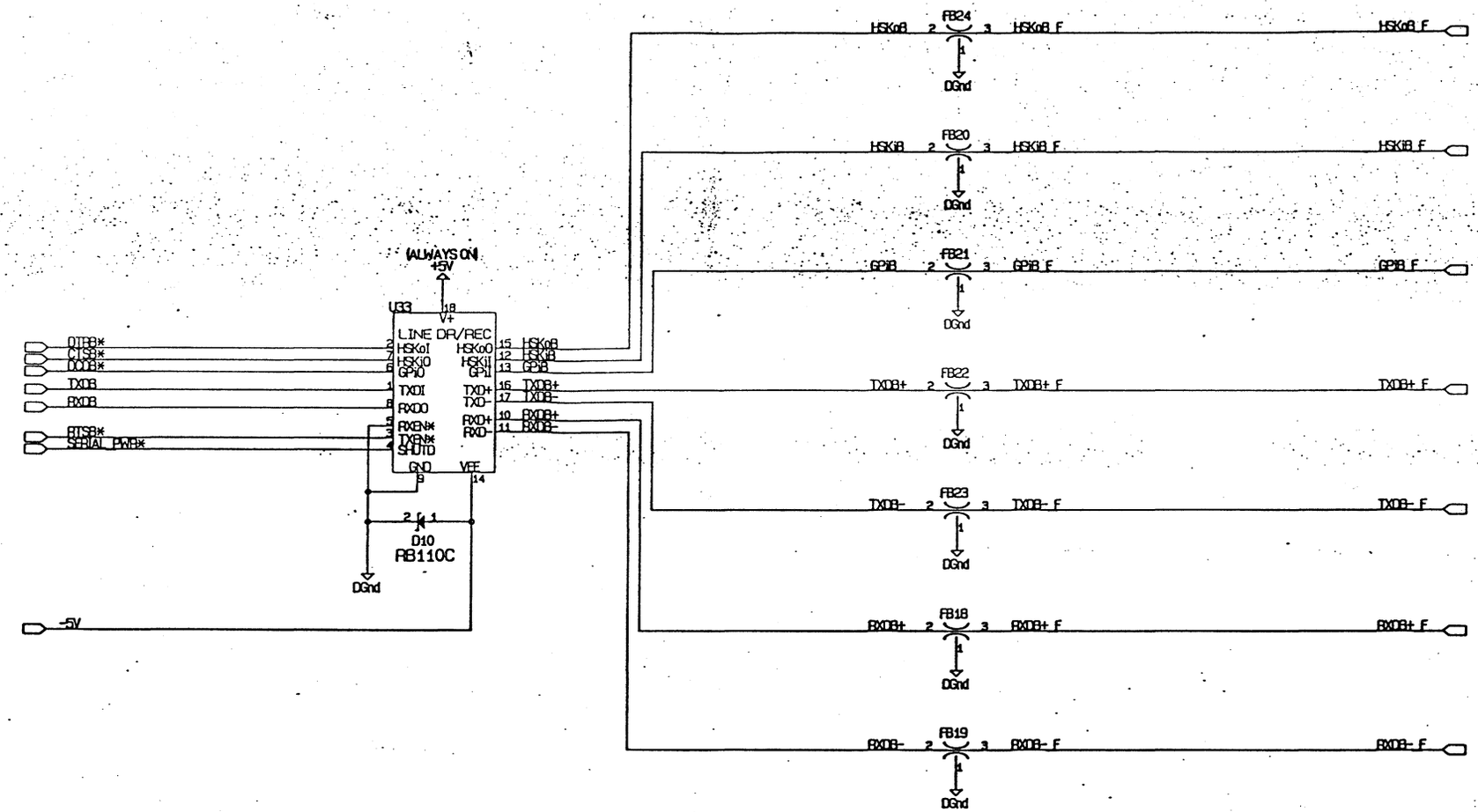

出図
1990 12.28
開発門室

REVISION					
DRAWN BY	PLANNED BY	CHECKED BY	APPROVED BY	MODEL IRX-901	PART NO. 0-724-169-02
TENTATIVE					

UNIT mm/in | ANGLE 3rd | SCALE | TOLERANCE | USED ON | RANK | FINISH | ORIGINAL MODEL | MATERIAL (COLOR) | FINISH (COLOR)

DESCRIPTION PU-58 EVT2

PART NO.

SHEET 9/18

A2

ISSUED ____ REVISED ____

KEYBOARD INTERFACE

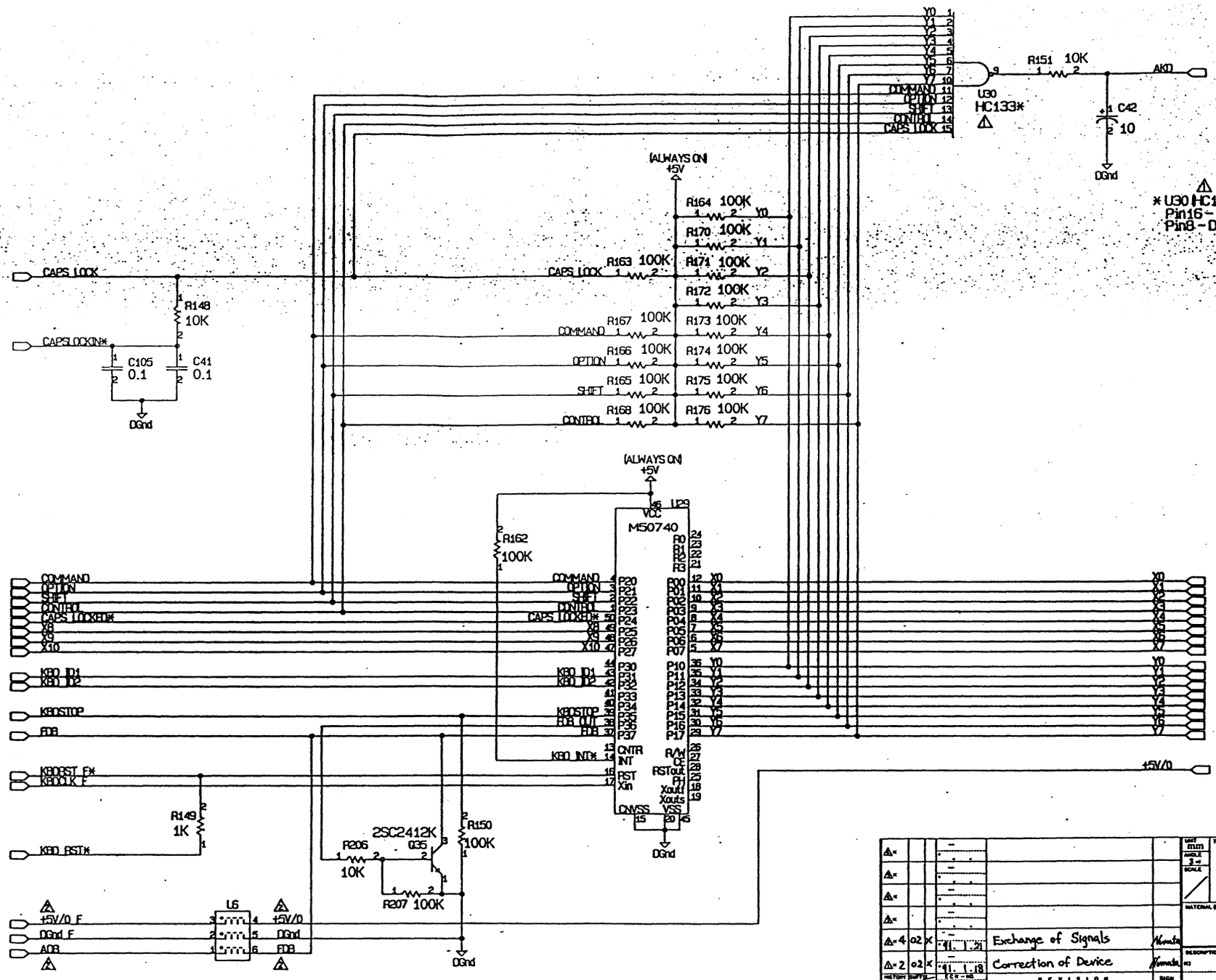

出図
1990 12. 28
開発PJ室

4	02	K	91. 1. 21	Exchange of Signals
2	02	K	91. 1. 18	Correction of Device

REVISION

MODEL IRX-901

PART NO. 0-724-169-02

TENTATIVE

DESCRIPTION PU-58 EVT2

SHEET 19/18

A2

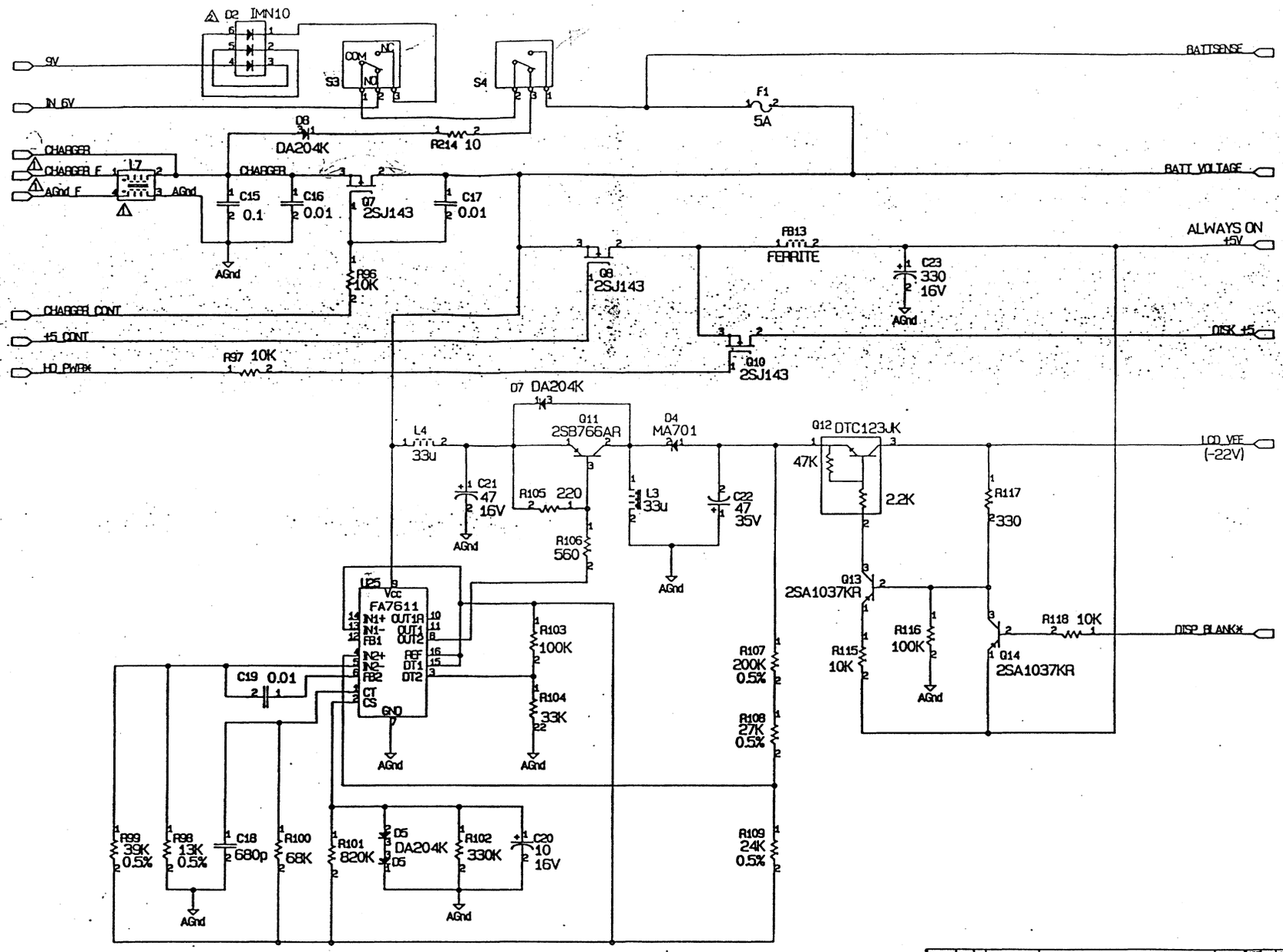

△×					
△×					
△×					
△×					
△×1	02	X	91.1.25	Change the device	Hamada
△×3	02	X	91.1.9	Add the choke coil	Hamada
HISTORY ×COLOR!	BUFFER REPL.	ECN-NO. DATE		REVISION	SIGN.

DRAWN BY: 91.1.25 | PLANNED BY | CHECKED BY | APPROVED BY

TENTATIVE — MODEL: IRX-901 — PART NO. 0-724-169-02

UNIT: mm | ANGLE: 3rd | SCALE | TOLERANCE | USED ON | RANK | ORIGINAL MODEL | MATERIAL (COLOR) | FINISH (COLOR)

DESCRIPTION: PU-58 EVT2

SHEET 11/18

変更 91.1.25 開発PJ室

A2

ISSUED | REVISED

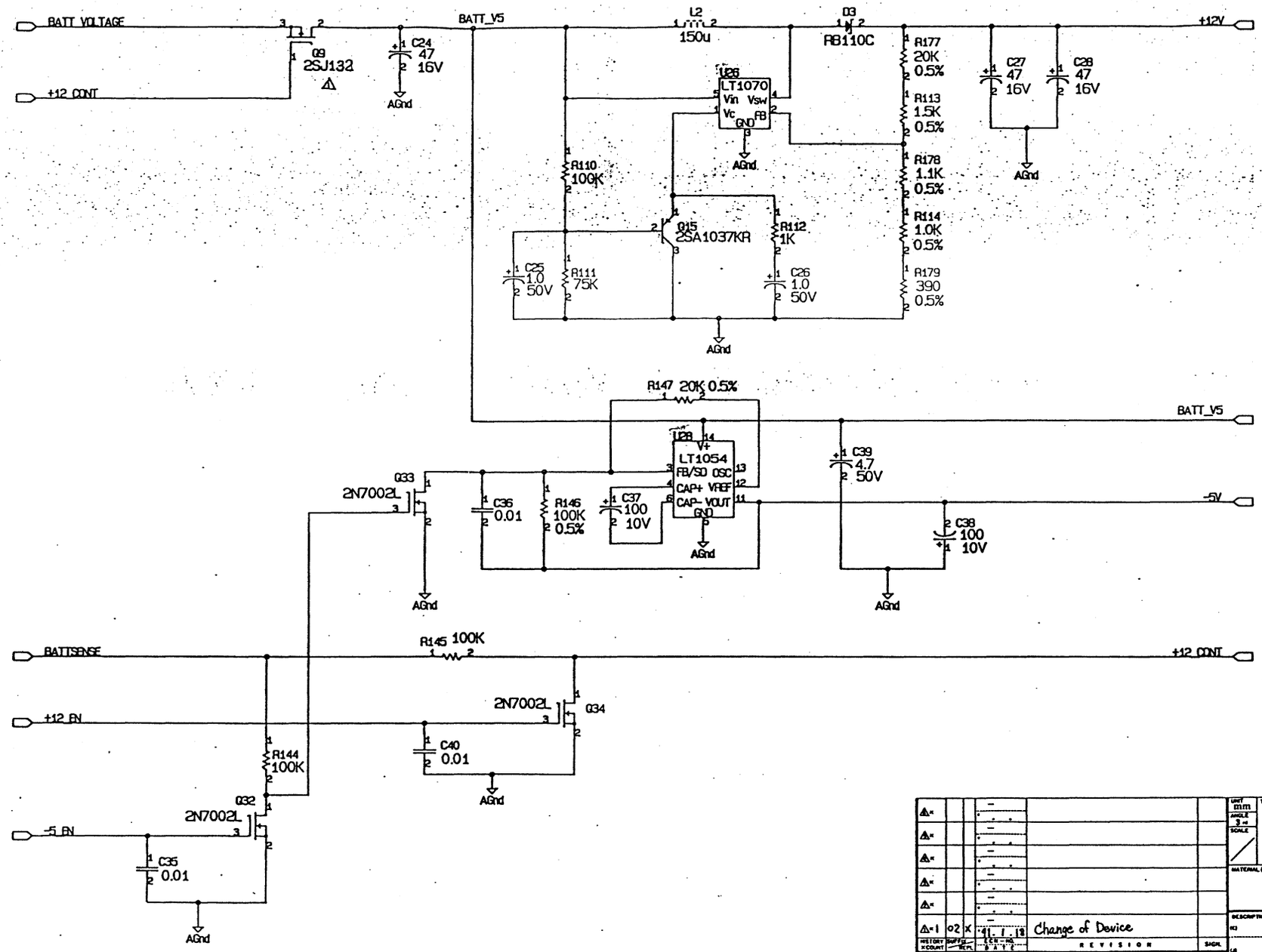

出図
1998.12.28
開発PJ室

1	02	X	98.1.13	Change of Device

REVISION

DRAWN BY: 12.27 | PLANNED BY | CHECKED BY | APPROVED BY

TENTATIVE — MODEL: IRX-901 — PART NO. 0-724-169-02

UNIT: mm — TOLERANCE — USED ON — SCALE — ORIGINAL MODEL — MATERIAL (COLOR) — FINISH (COLOR)

DESCRIPTION: PU-58 EVT2

SHEET 12/18

A2

POWER (I/O)

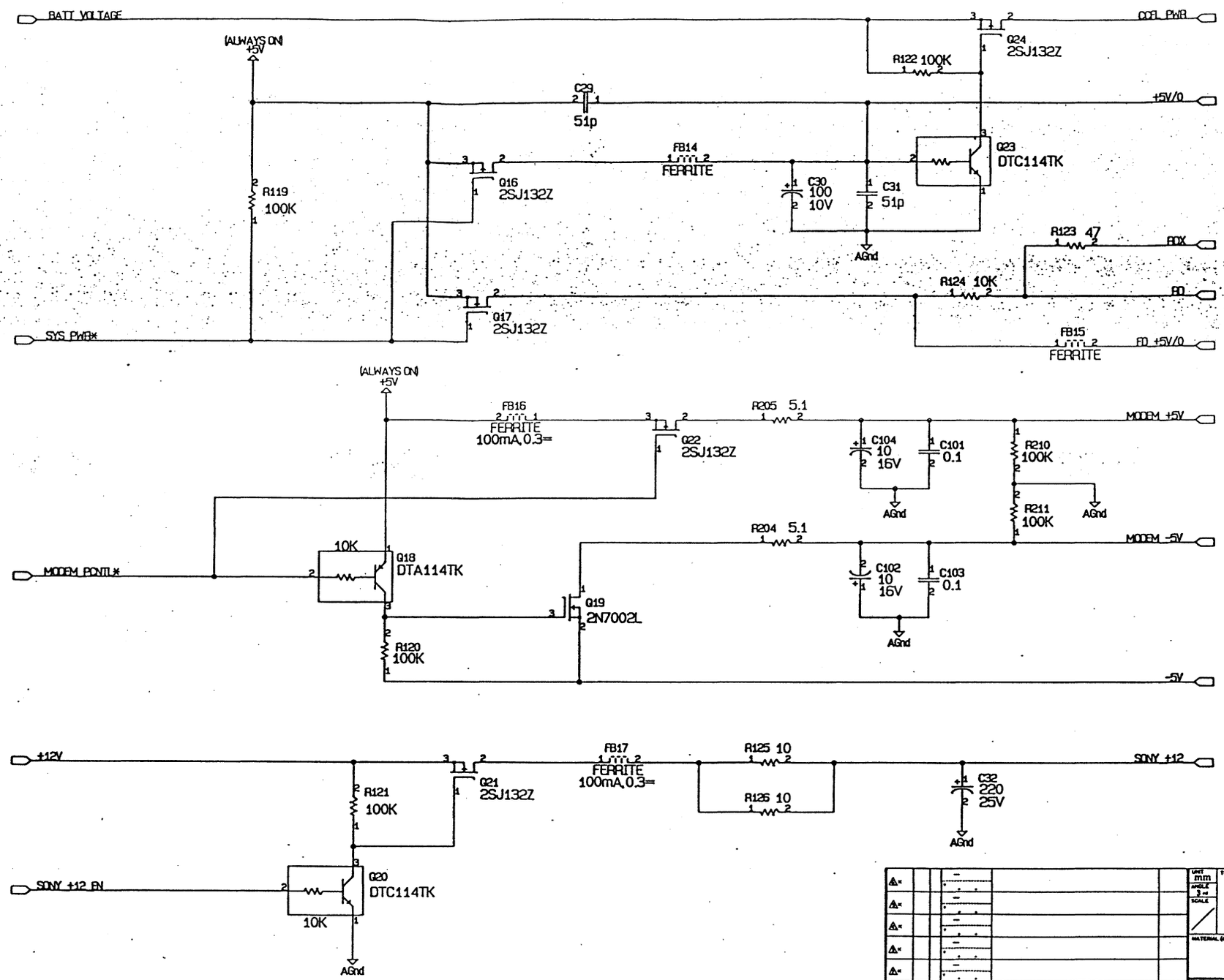

出図 1993 12.29 開発PJ室

MODEL	IRX-901
PART NO.	0-724-169-02
DESCRIPTION	PU-58 EVT2
SHEET	13/18

A2

ANALOG

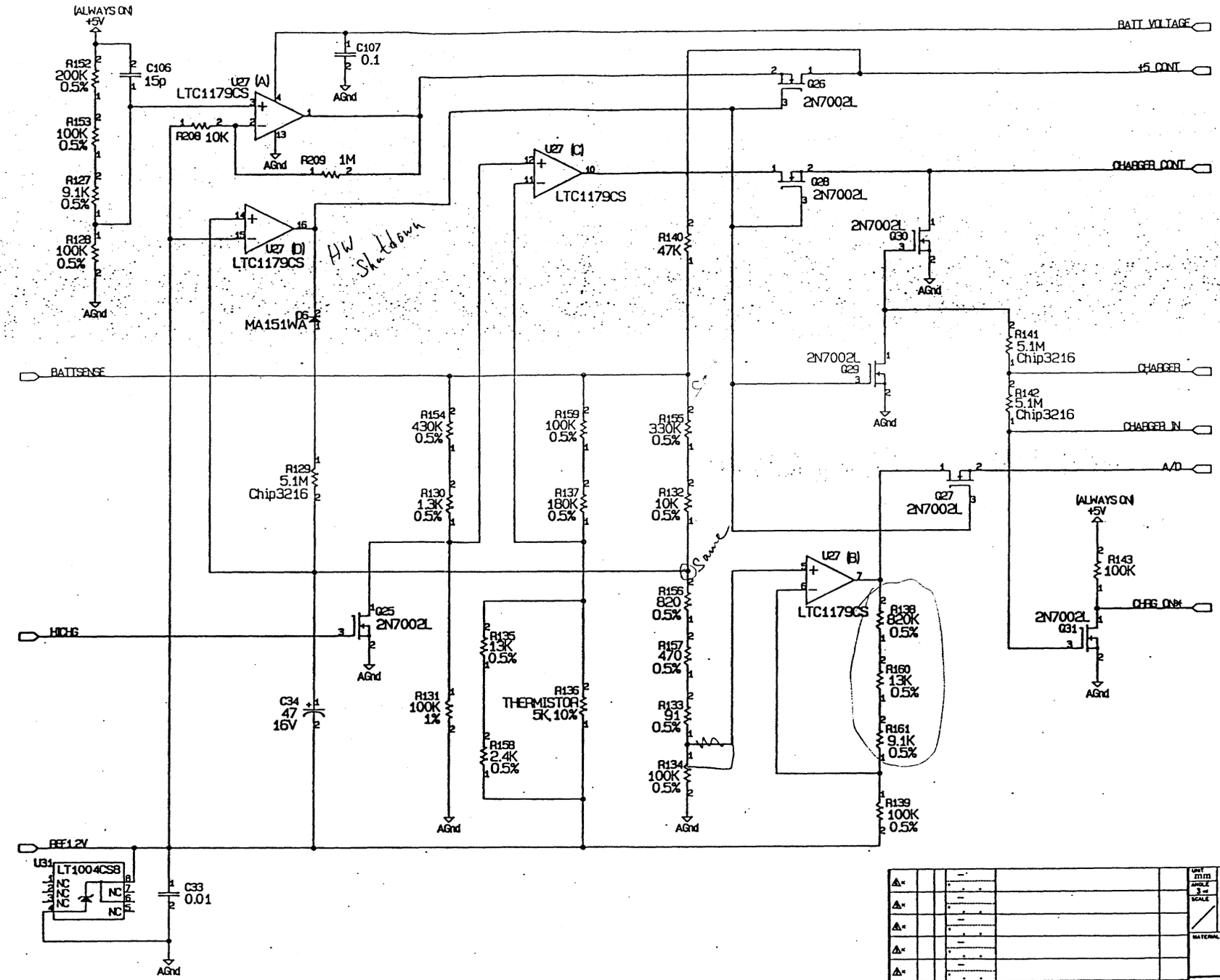

出図 2002.12.20 開発PJ室

DESCRIPTION	PU-58 EVT2
MODEL	IRX-901
PART NO.	0-724-169-02
SHEET	14/18

A2

TEST POINTS1

AS*	TP001
SYS_RST*	TP002
SYS_PWR*	TP003
PMGCLK_F	TP004
STOP_CLK	TP005
MODEM_PWR	TP006
KBORST_F*	TP007
KBOSTOP	TP008
3.9MHz_CLOCK	TP009
32MHz_CLOCK	TP010
SCC_CLOCK_F	TP011
DELAY_CS*	TP012
STNCLK	TP013
SONY_+12	TP014
MODEM_+5V	TP015
MODEM_-5V	TP016
MODEM_SOUNDF	TP017
60Hz	TP018
PMGR_PWM	TP019
AKD	TP020
COMMAND	TP021
OPTION	TP022
SHIFT	TP023
CONTROL	TP024
CAPS_LOCKED*	TP025
FDB	TP026
X0	TP027
X1	TP028
X2	TP029
X3	TP030
X4	TP031
X5	TP032
X6	TP033
X7	TP034
X8	TP035
X9	TP036
X10	TP037
Y0	TP038
Y1	TP039
Y2	TP040
Y3	TP041
Y4	TP042
Y5	TP043
Y6	TP044
Y7	TP045
9V	TP046
IN_5V	TP047
CHARGER	TP048
+5_CONT	TP049
HD_PWR*	TP050
BATTSENSE	TP051
BATT_VOLTAGE	TP052
+5V (ALWAYS ON)	TP053
DISK_+5	TP054
LCD_VEE (-22V)	TP055
DISP_BLANK*	TP056
+12V	TP057
BATT_V5	TP058
-5_EN	TP059
+12_EN	TP060
+12_CONT	TP061
CCR_PWR	TP062
-5V/0	TP063
MODEM_CONTL*	TP064
CHRG_ON*	TP065
A/D	TP066
HICHG	TP067
REF1.2V	TP068
	TP069
	TP070
	TP071
	TP072

出図 2001.12.29 開発P-J室

UNIT mm	TOLERANCE	USED BY	NAME		
ANGLE 3 ±			FINISH		
SCALE		ORIGINAL MODEL			
MATERIAL (COLOR)		Finish (COLOR)			
DESCRIPTION KI	PU-58 EVT2				
LB					
PART NO.				SHEET 16/18	

DRAWN BY	PLANNED BY	CHECKED BY	APPROVED BY	MODEL	IRX-901
				PART NO.	0-724-169-02

REVISION

ISSUED ____ REVISED ____

A2

TEST POINTS 2

TP073
TP074
TP075
TP076
TP077
TP078
TP079
TP080
TP081
TP082
TP083
TP084
TP085
TP086
TP087
TP088
TP089
TP090
TP091
TP092

TP093
TP094
TP095
TP096
TP097
TP098
TP099
TP100
TP101
TP102
TP103
TP104
TP105
TP106
TP107
TP108
TP109
TP110
TP111
TP112

TP113
TP114
TP115
TP116
TP117
TP118
TP119
TP120
TP121
TP122
TP123
TP124
TP125
TP126
TP127
TP128

TP129
TP130
TP131
TP132
TP133
TP134
TP135
TP136
TP137
TP138
TP139
TP140
TP141
TP142
TP143
TP144

出図
1991.12.23
開発PJ受

UNIT mm	TOLERANCE	USED ON	RANK		
ANGLE					
SCALE		ORIGINAL MODEL			
MATERIAL (COLOR)		FINISH (COLOR)			
DESCRIPTION	PU-58 EVT2				
PART NO.				SHEET	17/18

REVISION					
PLANNED BY	CHECKED BY	APPROVED BY	MODEL	IRX-901	
			PART NO.	0-724-169-02	

A2

BUS

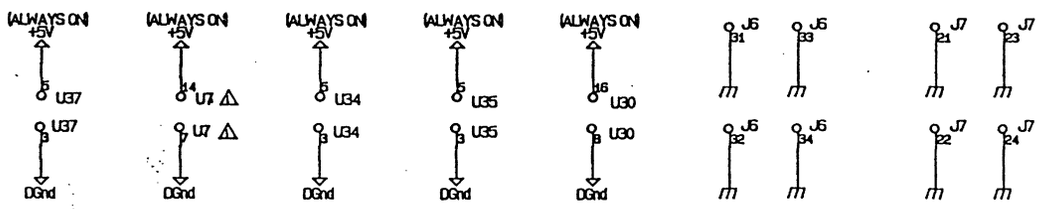

出図
1990 12. 28
開発PJ室

⚠×					
⚠×					
⚠×					
⚠×					
⚠×					
⚠-2	02	×	91. 1. 18	Correction of Reference	Numata
HISTORY COUNT	SUFFIX		ECR-NO. DATE	REVISION	SIGN.

DRAWN BY: 12.27 '91 18:03 | PLANNED BY | CHECKED BY | APPROVED BY | TENTATIVE

MODEL: IRX-901
PART NO.: 0-724-169-02

UNIT: mm | ANGLE: 3 | SCALE | TOLERANCE | USED ON | RANK | RANK2 | ORIGINAL MODEL | MATERIAL (COLOR) | FINISH (COLOR)

DESCRIPTION: PU-58 EVT2

PART NO.

SHEET 18/18

A2

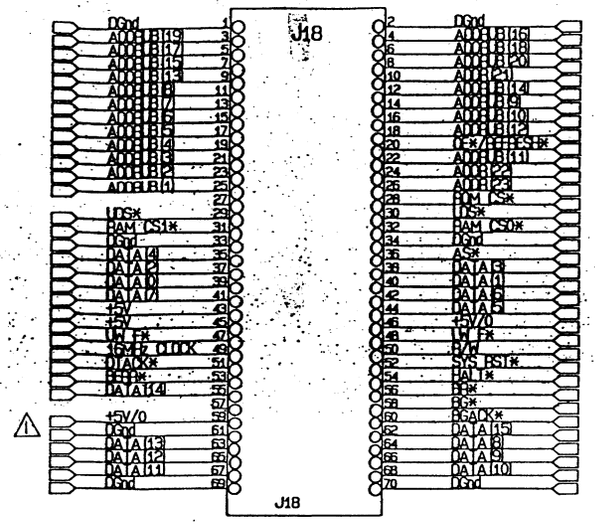

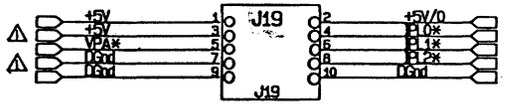

変更
四 1.25
開発PJ室

△×					
△×					
△×					
△×					
△×					
△×3	02	×	91.1.25	Change the signals	Nomura
HISTORY COUNT	SUFFIX		ECN-NO. DATE	REVISION	SIGN.

DRAWN BY	PLANNED BY	CHECKED BY	APPROVED BY
1991.1.25			

TENTATIVE

MODEL: IRX-901

PART NO.: 0-724-170-02

UNIT: mm | ANGLE: 3 rd | SCALE: / | TOLERANCE | MSED ON | RANK | NAME | ORIGINAL MODEL

MATERIAL (COLOR) | FINISH (COLOR)

DESCRIPTION: IF-54 EVT2

PART NO.

SHEET 1/4

ISSUED ____ REVISED ____

A2

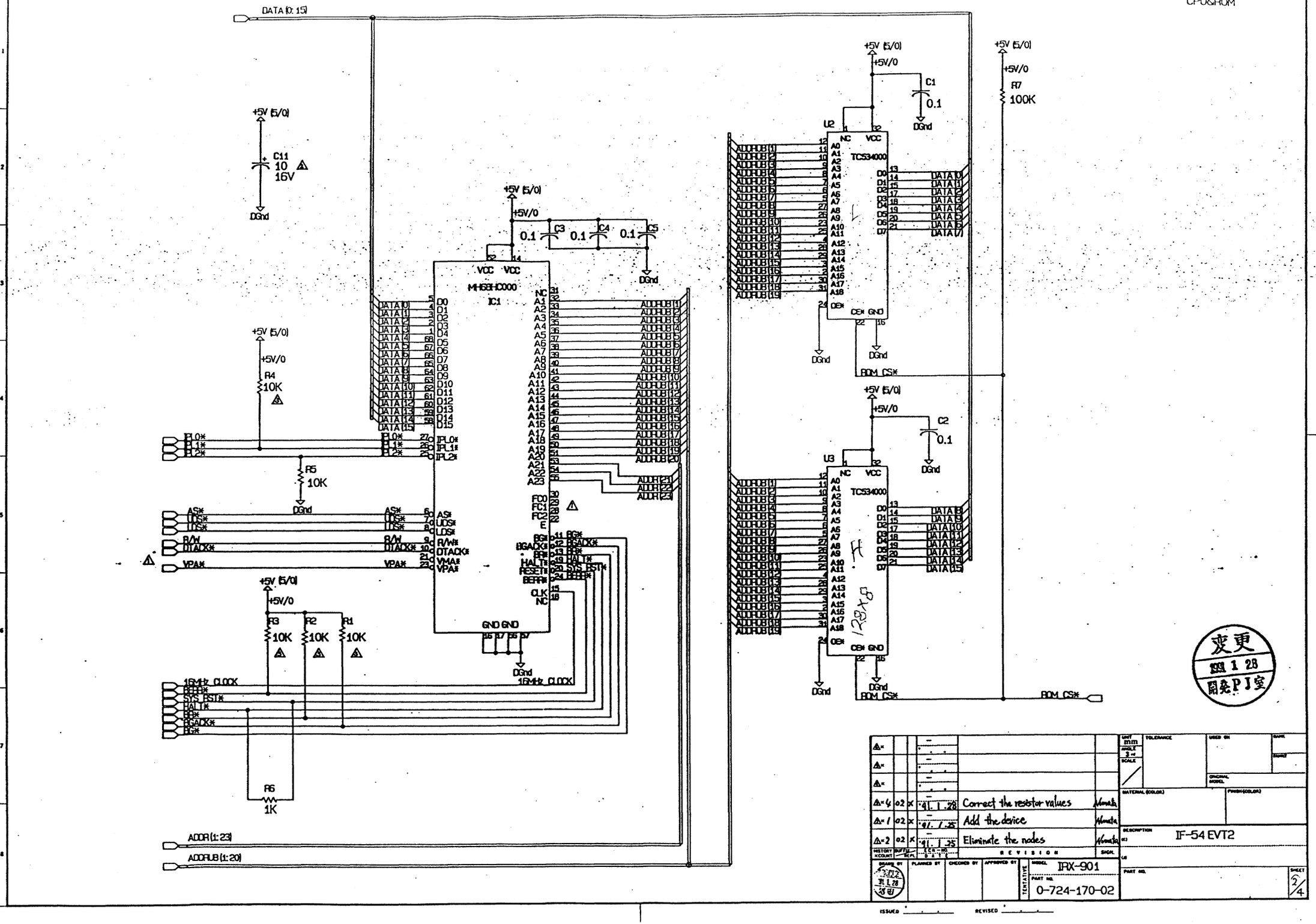
DATA(0:15)
+5V (5/0)
C11
10
16V
DGnd
MH68HC000
IC1
VCC VCC
GND GND
C3 0.1
C4 0.1
C5 0.1
R4
10K
R5
10K
R3
10K
R2
10K
R1
10K
R6
1K
IPL0*
IPL1*
IPL2*
AS*
UDS*
LDS*
R/W
DTACK*
VPA*
VMA*
16MHz CLOCK
BERR*
SYS RST*
HALT*
RESET*
BGACK*
BG*
ADDR(1:23)
ADDRUB(1:20)
U2
TC534000
U3
TC534000
C1 0.1
C2 0.1
R7
100K
ROM CS*
変更
91 1 28
開発PJ室
IF-54 EVT2
IRX-901
0-724-170-02
Correct the resistor values
Add the device
Eliminate the nodes
A2

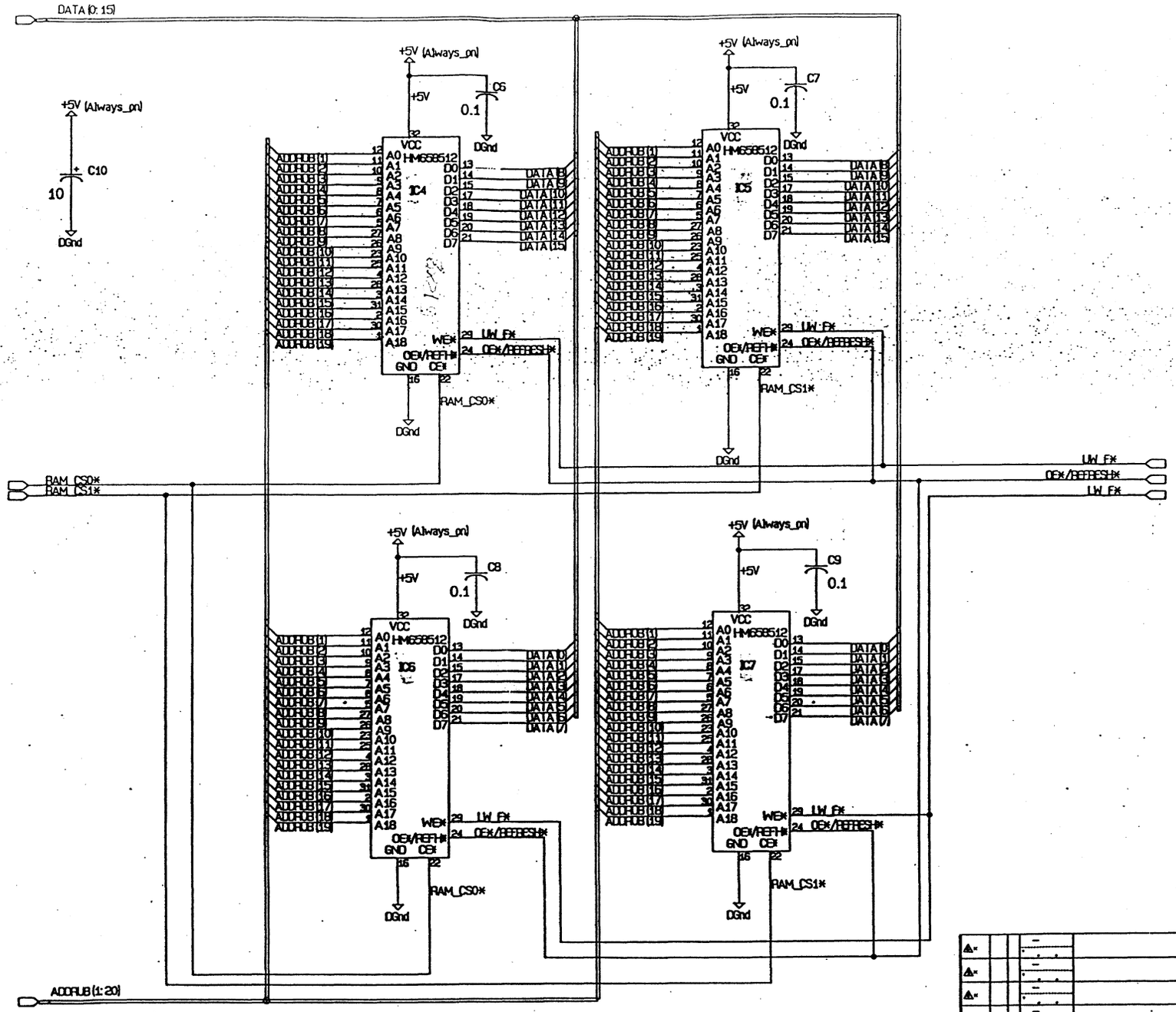

出図
1997.12.29
回路PJ室

UNIT mm	TOLERANCE	MADE ON	RANK			
ANGLE 3rd						
SCALE		ORIGINAL MODEL				
MATERIAL (COLOR)		FINISH (COLOR)				
DESCRIPTION	IF-54 EVT2					
MODEL	IRX-901					
PART NO.	0-724-170-02					
SHEET	3/4					

REVISION

ISSUED REVISED

A2

BUS

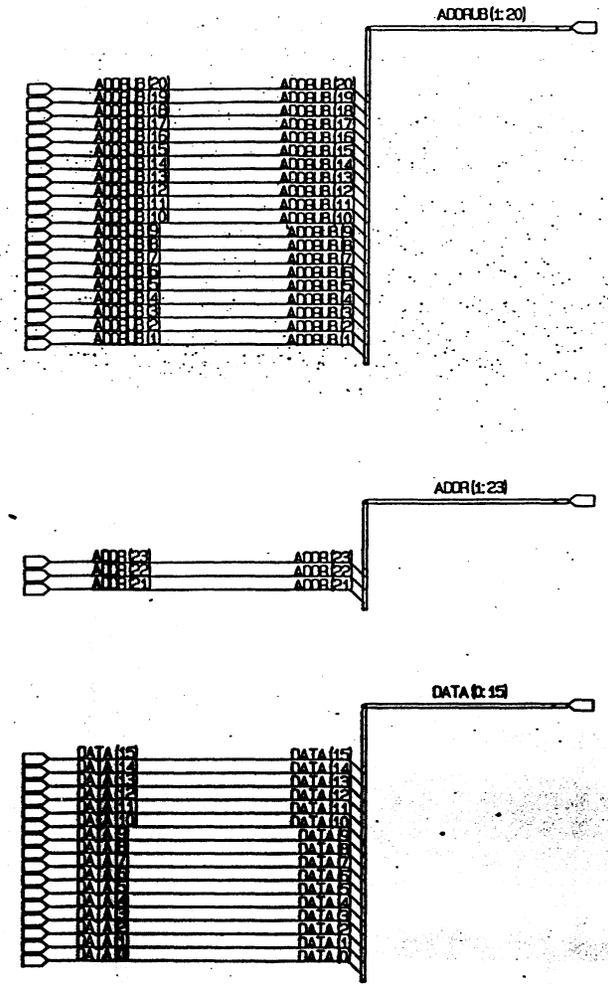

出図
1990.12.28
開発PJ室

HISTORY	SUFFIX	ECR-NO.	REVISION		SIGN.
HOUSING	REPL.	DATE			

UNIT	TOLERANCE	DRAWN ON	SCALE
SHEET 3 of			SHEET
SCALE		ORIGINAL MODEL	
MATERIAL (COLOR)		FINISH (COLOR)	
DESCRIPTION	IF-54 EVT2		
PART NO.			SHEET 4/4

APPROVED 96.12.26	PLANNED BY	CHECKED BY	APPROVED BY
TENTATIVE	MODEL IRX-901	PART NO. 0-724-170-02	

ISSUED ____ REVISED ____

A2