208028	K2480-COMPAT
205281.01	LESS CASE/BEZEL
201179.10	CTRLS GJMRQ
205274.01	RS232 CABLE

6175 JACKSON ROAD • ANN ARBOR, MICHIGAN 48103 • TEL: 313-663-8000 • TWX: 810-223-6033
Copyright 1977: Ann Arbor Terminals, Inc.
Printed in U.S.A.

ANN ARBOR TERMINALS INC

208028

MODEL K2480-COMPAT
DISPLAY TERMINAL

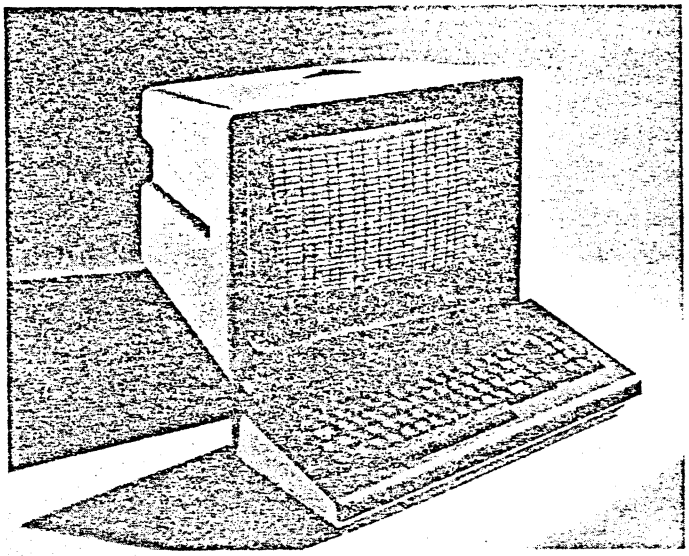

The K2480-COMPAT is a TTY-compatible CRT keyboard/display terminal that is software-compatible with the older Ann Arbor K2480 terminal (p/n 203150). It is available with a 2440 FORMAT option to emulate the older Ann Arbor K2440 terminal (p/n 203120).

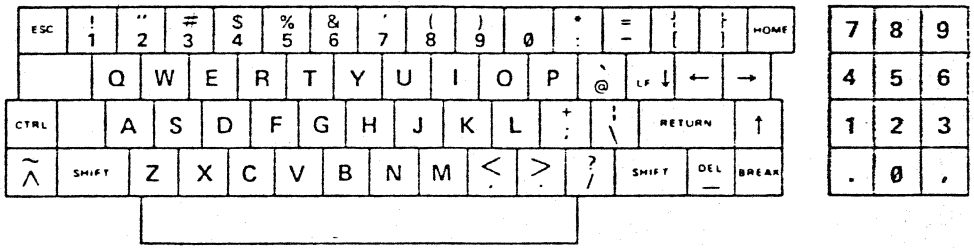

KSR OPERATION

The terminal operates in the same manner as a KSR teletype terminal. As the operator strikes each key, its character code is sent to the computer as a start/stop synchronized serial character at the specified baud rate.

If the terminal is set for full-duplex, the computer echoes back the character (or an error message) to the terminal's memory, whereupon it is displayed on the screen. This is the usual mode of operation. If the computer is not programmed for echo-back, the terminal may be set for half-duplex, whereupon the character is fed back into the terminal's memory as it is transmitted.

In either case, the incoming data are stored and the cursor positioned under control of the memory address register. Characters enter at the cursor position. The cursor automatically advances after each character entry. Each entry overwrites the character previously displayed at that position; no other data on the screen are affected. Advance of the cursor past the end of a line automatically advances it to the beginning of the next line.

ASCII CODES

b	6 5 4	0 0 0	0 0 1	0 1 0	0 1 1	1 0 0	1 0 1	1 1 0	1 1 1
3210	COL → / ROW ↓	0	1	2	3	4	5	6	7
0000	0	NUL	DLE	SP	0	@	P	`	p
0001	1	SOH	DC1	!	1	A	Q	a	q
0010	2	STX	DC2	"	2	B	R	b	r
0011	3	ETX	DC3	#	3	C	S	c	s
0100	4	EOT	DC4	$	4	D	T	d	t
0101	5	ENQ	NAK	%	5	E	U	e	u
0110	6	ACK	SYN	&	6	F	V	f	v
0111	7	BEL	ETB	'	7	G	W	g	w
1000	8	BS	CAN	(	8	H	X	h	x
1001	9	HT	EM	)	9	I	Y	i	y
1010	10	LF	SUB	*	:	J	Z	j	z
1011	11	VT	ESC	+	;	K	[	k	{
1100	12	FF	FS	,	<	L	\	l	|
1101	13	CR	GS	-	=	M	]	m	}
1110	14	SO	RS	.	>	N	^	n	~
1111	15	SI	US	/	?	O	_	o	DEL

COMMANDS

The terminal's commands may be executed from either the keyboard or the computer by entering the character (or character sequence) shown in the table. The command-characters are not stored or displayed.

ERASE SCREEN. Moves the cursor to the first character position of the top line and clears the screen.

The following cursor commands operate on the terminal's memory address register to effect the specified cursor movement. They do not affect the data presently stored and displayed.

CURSOR HOME. Moves the cursor to the first character position of the first line. The displayed data are unchanged.

CARRIAGE RETURN. Returns the cursor to the first character position of the line in which it is located.

CURSOR DOWN. Moves the cursor one line below its present position. If in bottom line, the cursor moves to same position in the top line (Page display), or all lines move up one line (Roll display).

CURSOR UP. Moves the cursor one line above its present position. If in the top line, the cursor does not move.

CURSOR RIGHT. Moves the cursor one character position to the right. If in the last character position of the line, the cursor moves to the first character position of the next line.

CURSOR LEFT. Moves the cursor one character position to the left. If in the first character position of the line, the cursor moves to the last character position of that line.

SET CURSOR ADDRESS. The cursor may be moved to an absolute x-y position on the screen by entering the three-character string: SI-CPC-CPL. The CPC-code moves the cursor horizontally to the specified character psoition within the line. The CPL-code moves the cursor vertically to the specified line. The permitted values of CPL and CPC are shown in the code tables.

The following accent commands selectively set a 2-bit tag (accent) register, the contents of which are appended to each character as it is written into memory, causing the character to be displayed with the accent specified.

START BLINK. Causes all display-characters subsequently entered to be displayed blinking. Blink rate is approx. 1/sec (80% on, 20% off).

START DIM. Causes all display-characters subsequently entered to be displayed with reduced brightness.

START REVERSE-VIDEO. Causes all display-characters subsequently entered to be displayed as black characters on a white character field.

START NORMAL. Causes all display-characters subsequently entered to be displayed normally, ie, non-blinking, bright, and white on black.

COMMANDS	KEY	CHAR SEQUENCE		
		1st	2nd	3rd
Erase Screen (1)	CTRL/L	FF		
Cursor Home	HOME	VT		
Carriage Return	RETURN	CR		
Cursor Down	LF↓	LF		
Cursor Up	↑	SO		
Cursor Right	→	HT		
Cursor Left	←	BS		
Set Cursor Address		SI	CPC	CPL
Start Normal (1)		RS		
Start Blink		RS	US	
Start Dim		RS	GS	
Start Rev Video		GS	US	

(1) State of terminal at power-on.

CPC CODES	CHAR POS 0 FIRST CHAR POS TO LEFT CHAR POS 79 LAST CHAR POS TO RIGHT								
DI	6 5 4	0 0 0	0 0 1	0 1 0	0 1 1	1 0 0	1 0 1	1 1 0	1 1 1
3210	COLUMN → / ROW ↓	0	1	2	3	4	5	6	7
0000	0	0	16	20	30	40	50	60	70
0001	1	1	11	21	31	41	51	61	71
0010	2	2	12	22	32	42	52	62	72
0011	3	3	13	23	33	43	53	63	73
0100	4	4	14	24	34	44	54	64	74
0101	5	5	15	25	35	45	55	65	75
0110	6	6	16	26	36	46	56	66	76
0111	7	7	17	27	37	47	57	67	77
1000	8	8	18	28	38	48	58	68	78
1001	9	9	19	29	39	49	59	69	79
1010	10								
1011	11								
1100	12								
1101	13								
1110	14								
1111	15								

CPL CODES	LINE 0 = TOP LINE LINE 23 = BOTTOM LINE								
DI	6 5 4	0 0 0	0 0 1	0 1 0	0 1 1	1 0 0	1 0 1	1 1 0	1 1 1
3210	COLUMN → / ROW ↓	0	1	2	3	4	5	6	7
0000	0					0	16		
0001	1					1	17		
0010	2					2	18		
0011	3					3	19		
0100	4					4	20		
0101	5					5	21		
0110	6					6	22		
0111	7					7	23		
1000	8					8			
1001	9					9			
1010	10					10			
1011	11					11			
1100	12					12			
1101	13					13			
1110	14					14			
1111	15					15			

CONTROLS

The terminal provides for operator control, directly from the keyboard, of the terminal's control settings: I/O, keyboard, and display mode, and baud rate. The control settings come on a preset condition (see table) each time the terminal is turned on. The operator can change the settings by entering Setup mode (ie, typing Nine on the numeric pad with the CTRL-key depressed), typing the character (or characters) shown in the table for the control setting changes desired, and then typing the @-key to return to KSR mode. The terminal operates with the changed settings until again changed, or until the next power off/on cycle returns them to their preset condition. The power-up condition is preset by diode jumpers on the logic board, and can be changed in the field by a qualified technician.

During Setup mode, the terminal operates in Local I/O. Neither the CTRL/9 or the characters entered are sent to the computer. The characters display at the cursor position, for operator verification, but the cursor does not move. In event of error, the last character entered (within a group) prevails. On return to KSR mode, the character that was previously displayed at that position (prior to entering Setup mode) is returned to the screen.

CONTROLS			KEY
Enter Setup Mode			CTRL/9
BAUD RATE	110 Baud		A
	300	(1)	B
	600		C
	1200		D
	1800		E
	2400		F
	4800		G
	9600		H
I/O	Full-duplex	(1)	J
	Half-duplex		K
	Local		L
KY	TTY	(1)	M
	Full-ASCII		N
DSP	Page		P
	Roll	(1)	R
TST	Test On		O
	Test Off	(1)	Q
Return to KSR Mode			@

(1) State of terminal at power-on (unless otherwise specified at time of order).

PAGE MODE. Advance of the cursor past the end of the bottom line advances the cursor to the beginning of the top line. Used for display/update of tabular data.

ROLL MODE. Advance of the cursor past the end of the bottom line moves all lines up one line. The bottom line clears and the cursor remains in the bottom line. The top line is lost. Used for display of textual data, listing, and other continuous printout.

TTY MODE. Operator entry is constrained to the 97-character TTY33 ASCII set. The keyboard is inhibited from generating the 31 lower-case characters.

FULL-ASCII MODE. Permits operator entry of the full 128-character ASCII set. Only the 64-character set is displayed; the lower-case characters are mapped into upper-case when received by the terminal.

FULL DUPLEX. Keyboard entries go to the outgoing data line only. Display memory is written from the incoming data line only.

HALF DUPLEX. Keyboard entries go to both the display memory and the outgoing data line. Display memory is written from both the keyboard and the incoming data line.

LOCAL. Keyboard entries go to the display memory only. The outgoing data line is held at Mark. The incoming data line is ignored.

TEST MODE. Permits the ASCII control codes to be displayed, and not acted upon, to facilitate system debugging. Characters from columns 2-3-4-5 of the ASCII Code table are displayed normally, ie, non-blinking white-on-black. Characters from columns 0-1 (the control codes) are mapped into columns 4-5 and displayed blinking. Codes from columns 6-7 are displayed normally (if the unit displays lower-case characters) or are mapped into columns 4-5 and displayed as reverse video.

Besides the keyboard, all other manual controls are located at the front of the terminal in a recessed area below the screen.

ON/OFF SWITCH. This two-position switch controls AC power to the unit. Setting the switch to ON resets the terminal to the power-on state shown in the Command and Control tables.

BRIGHTNESS CONTROL. This control is used to set the brightness of the CRT display. Adjust brightness so the display raster is below the level of visibility.

CONTRAST CONTROL. Controls character brightness relative to the background. Adjust after brightness adjustment.

DISPLAY

Display Format. 80 characters x 24 lines
Screen. 15" diagonal, P4 phosphor
Viewing Area. 10" x 8"
Character Set. 64-character ASCII
Character Shape. 7 x 7 dot matrix in 10 x 10 dot field
Character Size. .09" x .22" nominal
Character Accents. Blink, dim, reverse-video
Cursor. Blinking field

KEYBOARD

The character codes generated by each key, under each condition of SHIFT- and CTRL-key depression, are shown in Table A. Blank means that no code is sent to the computer. Holding any key depressed for greater than ½-second causes its character code(s) to repeat at approx. 15 char/sec. The BREAK-key performs its normal teletypewriter function (ie, holds the outgoing data line at Space level).

CASE

WEIGHT. 35 lbs.
POWER. 105-125VAC, 60 Hz, 50W
TEMPERATURE. 10° - 40°C (operating)
-40° - 65°C (storage)
HUMIDITY. 0-95% non-condensing

PROGRAMMING

All commands except ERASE SCREEN execute within one character time at 9600 baud. ERASE SCREEN requires three pad characters following at 9600 baud and one at 4800 baud.

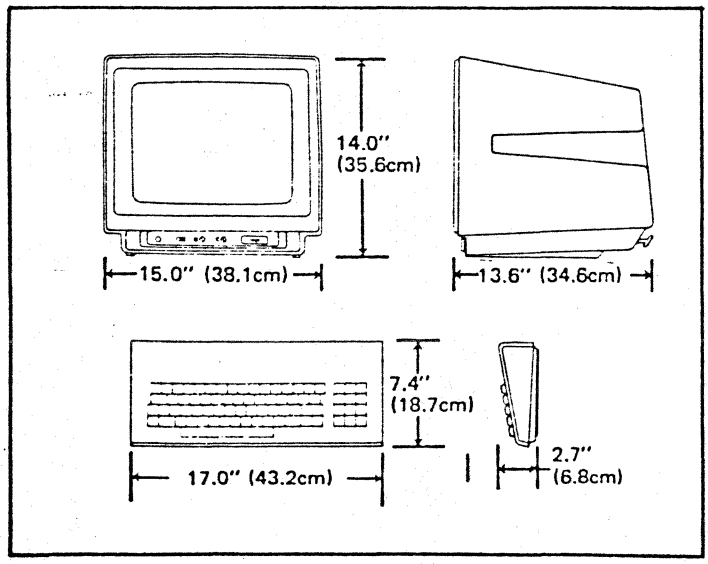

INSTALLATION

All connections to the terminal are made behind an access door at the rear of the terminal case. No connectors protrude from the back to be knocked loose, damaged, or occupy extra space. The door safely clamps the cables as they issue from the case, permitting any excess lengths to be stored within the case for a neater installation. The terminal is supplied with the following cables.

RS232 CABLE (optional). 6-foot cable with standard EIA connector (male) for direct plug-in to a coupler, modem, or local processor.

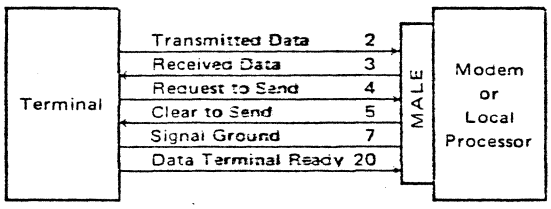

KEYBOARD CABLE. 4-foot cable with plug-in to terminal.

LINE CORD. 5-foot cord with standard 3-wire 115VAC plug.

20MA CABLE (optional). Converts terminal to current-loop interface; barrier-strip connection; internal or external loop power.

K2480 COMPATIBILITY

The K2480-COMPAT is identical to the older Ann Arbor K2480 terminal (p/n 203150) except as follows:

CHARACTER ACCENT. Character accent (previously optional) has been added as a standard.

CURSOR. The cursor has been changed to a blinking reverse-video field (instead of underline).

CONTROLS. All controls can be set directly from the keyboard (replacing the S1, 2, and 3 switches of the older product).

KEYBOARD CONNECTOR. The keyboard has been changed to a passive unencoded switch-matrix type. (An Encoded Keyboard option is available for users who use their own encoded keyboard with the unit.)

PACKAGING. This unit is available in all the Ann Arbor cases (including the new E-case). However, the PC cards are not interchangeable between the newer and older units.

6175 JACKSON ROAD • ANN ARBOR, MICHIGAN 48103 • TEL: 313-663-8000 • TWX: 810-223-6033
Copyright 1979: Ann Arbor Terminals, Inc.
Printed in U.S.A.

TABLE A. KEYBOARD LAYOUT/CODES

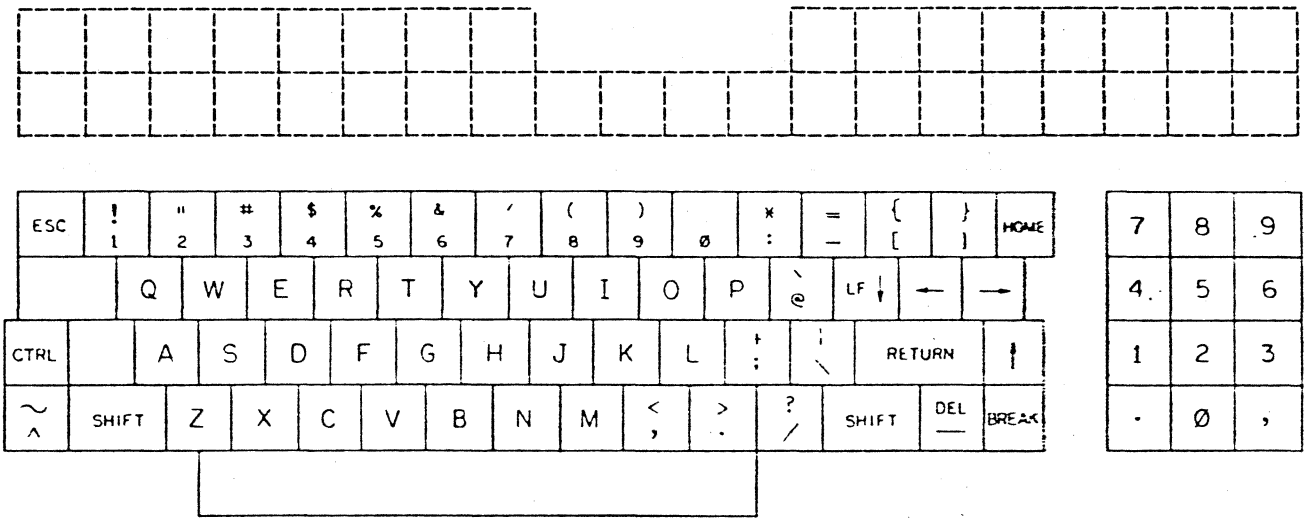

MAIN KEYPAD

	LOC	*	UN SHFT	SHFT	CTRL	CTRL SHFT
ROW 1	R1		Sp	Sp	Sp	Sp
	D7		^	~	RS	RS
	R6					
	D3		z	Z	SUB	SUB
	D1		x	X	CAN	CAN
	A4		c	C	ETX	ETX
	C7		v	V	SYN	SYN
	A3		b	B	STX	STX
	B7		n	N	SO	RS
	B6		m	M	CR	GS
	F4		,	<	,	<
	F6		.	>	.	>
	F7		/	?	/	?
	R5					
	EØ		—	DEL	US	US
	UV					
ROW 2	R3					
	R4					
	A2		a	A	SOH	SOH
	C4		s	S	DC3	DC3
	A5		d	D	EOT	EOT
	A7		f	F	ACK	ACK
	BØ		g	G	BEL	BEL
	B1		h	H	BS	BS
	B3		j	J	LF	LF
	B4		k	K	VT	ESC
	B5		l	L	FF	FS
	F3		;	+	;	+
	D5		\	|	FS	FS
	M6		CR	CR	CR	CR
	LØ		SO	SO	SO	SO

	LOC	*	UN SHFT	SHFT	CTRL	CTRL SHFT
ROW 3	R2					
	C2		q	Q	DC1	DC1
	DØ		w	W	ETB	ETB
	A6		e	E	ENQ	ENQ
	C3		r	R	DC2	DC2
	C5		t	T	DC4	DC4
	D2		y	Y	EM	EM
	C6		u	U	NAK	NAK
	B2		i	I	HT	HT
	CØ		o	O	SI	US
	C1		p	P	DLE	NUL
	A1		@	'	NUL	NUL
	M3		LF	LF	LF	LF
	M1		BS	BS	BS	BS
	K3		HT	HT	HT	HT
ROW 4	P4		ESC	ESC	ESC	ESC
	E1		1	!	1	!
	E2		2	"	2	"
	E3		3	#	3	#
	E4		4	$	4	$
	E5		5	%	5	%
	E6		6	&	6	&
	E7		7	'	7	'
	FØ		8	(	8	(
	F1		9	)	9	)
	H4		Ø	Ø		
	F2		:	*	:	*
	F5		-	=	_	=
	D4		[	{	ESC	ESC
	D6		]	}	GS	GS
	K5		VT	VT	VT	VT

NAME	EZ			ANN ARBOR TERMINALS / *Specification*	208028
DATE	9-14-78			K2480 COMPAT	SHT 1 OF 2
	ENG	MFG	REL		

Specifications subject to change without notice.

NUMERIC PAD

LOC	*	UN SHFT	SHFT	CTRL	CTRL SHFT
H2		.	.		
H4		Ø	Ø		
HØ		,	,		
H5		1	1		
H6		2	2		
H7		3	3		

LOC	*	UN SHFT	SHFT	CTRL	CTRL SHFT
JØ		4	4		
J1		5	5		
J2		6	6		
J3		7	7		
J4		8	8		
J5		9	9		

FUNCTIONS KEYS

BOTTOM ROW

LOC	*	CODE
J6		EOT
J7		ENQ
KØ		ACK
K1		BEL
K2		BS
K4		LF
K6		FF
K7		CR
L1		SI
L2		DLE
L3		DC1
L4		DC2
L5		DC3
L6		DC4
L7		NAK
MØ		SYN
M2		HT
M4		VT
M5		FF
M7		SO

TOP ROW

LOC	*	CODE
NØ		SI
N1		DLE
N2		DC1
N3		DC2
N4		DC3
N5		DC4
N6		NAK
N7		SYN
PØ		ETB
P1		CAN
P2		EM
P3		SUB
P5		FS
P6		GS
P7		RS
RØ		US

NOTES:

(1) In keyboard TTY mode, the characters in columns 6-7 of the ASCII table are not generated (except DEL). The corresponding characters in columns 4-5 are generated instead.

MODEL K2480-COMPAT OPTIONS. The following options are available on the terminal. Unmarked options involve only wire or diode jumper changes and can be easily changed or added in the field by a qualified technician. Options marked with an asterisk (*) require a different PROM(s). They can also be changed or added in the field, but at greater cost than if specified at time of order.

*2440 FORMAT. This option configures the terminal to display 40 (instead of 80) characters per line. The display format becomes 40 characters by 24 lines. The CPC-code table (for the Set Cursor Address command) is changed as shown below. With this option, the terminal is software-compatible with the Ann Arbor K2440 Terminal (p/n 203120). Specify .02 2440 FORMAT.

CPC CODES		CHAR POS Ø / CHAR POS 39			FIRST CHAR POS TO LEFT / LAST CHAR POS TO RIGHT				
b 6 5 4		0 0 0	0 0 1	0 1 0	0 1 1	1 0 0	1 0 1	1 1 0	1 1 1
3210	COLUMN → / ROW	Ø	1	2	3	4	5	6	7
0000	Ø					9	10	20	30
0001	1					1	11	21	31
0010	2					2	12	22	32
0011	3					3	13	23	33
0100	4					4	14	24	34
0101	5					5	15	25	35
0110	6					6	16	26	36
0111	7					7	17	27	37
1000	8					8	18	28	38
1001	9					9	19	29	39
1010	10								
1011	11								
1100	12								
1101	13								
1110	14								
1111	15								

*LOWER-CASE CHARACTERS DISPLAY. This option configures the terminal to display the full 96-character ASCII set, less DEL (Rubout). Accent capability is reduced to blink only, to provide for the increased character set; the Start Dim and Start Reverse-Video commands are ignored. The power-up condition of the keyboard control is strapped for Full-ASCII (instead of TTY). Specify .01 CHARS 953502.

CONTROL SETTINGS (POWER-ON). The terminal is strapped for the following control settings at power-on: 300 baud, full-duplex I/O, TTY keyboard, and roll display (ie, CTRLS BJMR; see CONTROLS table.) This option enables specification, on order, of different power-on settings. Specify .10 CTRLS, followed by the 4-letter sequence desired (from the CONTROLS table).

TRANSMITTED PARITY. The terminal is strapped to transmit Even parity. This option enables specification, on order, of Odd, Mark (logic 1), or Space (logic Ø) parity instead. Specify .11 PARITY XMT, followed by O, M, or S for the parity desired. Note: This option provides for the parity transmitted only; it does not provide for display of parity errors received.

*CR/LF OPTIONS. The terminal is configured to require both a carriage-return (CR) code and a line-feed (LF) code to start a new line before end-of-line, and to provide automatic wrap-around to new line at end-of-line. The AUTO LF ON CR option provides automatic line-feed on receipt of the CR-code alone. The CR-code moves the cursor to the first character position of the next lower line. The HOLD AT EOL option inhibits the automatic wrap-around at end-of-line. Entries attempted past end-of-line overwrite the last character in the line. The cursor may be advanced only by carriage-return/line-feed: Specify .21 CR/LF, followed by A (= Auto LF on CR) and/or H (= Hold at EOL).

*DELETE FUNCTIONS. For some applications, it is desirable to delete certain functions of the terminal. In a controlled data entry application, for example, it may be desirable to delete Setup mode (to prevent the operator from changing the terminal's control settings). In an RO application, it may be desirable to delete display of the cursor (since it's not needed by the computer and may be distracting to an observer). Specify .22 DEL, followed by S (= delete Setup mode), C (= delete cursor display), and/or K (= delete keyboard repeat).

EXPORT MODEL. This option configures the terminal to operate to export power and TV standards. Power input is 210 to 250 VAC, 50 Hz. The composite video output is 625-line compatible; display refresh rate is 50 Hz. Specify .98 EXPORT MODEL.

CASE OPTIONS. The terminal is available in any of the standard Ann Arbor cases. See Case specifications. Specify .94 D-CASE, .95 C-CASE, .96 R-CASE.

OTHER. Other character sets/fonts, keyboard legends/codes, command sets, etc., are available on special order. Consult factory.

ANN ARBOR TERMINALS INC

208028

K2480-COMPAT
CHECKOUT & INSTALLATION

1. UNPACKING

Ann Arbor terminals are carefully packed to ensure safety during shipment. In unpacking, inspect carefully for any damage that may have occurred during shipment. If any damage is found, or even if the cartons appear to have been roughly handled or dropped, be sure to note it on the bill of lading for possible future claims with the carrier.

2. INITIAL TURN-ON

If there is any evidence of external damage, remove the cover of the unit and inspect for loose connections, hardware, etc., internally before applying power. The following steps are recommended for initial operation:

a. Check that the power switch is in the OFF position (to the left). The power switch, and the brightness and contrast controls, are located at the front of the unit in a recessed area below the tube.

b. If the unit has a keyboard, plug it in as follows: Locate the access door at the rear right of the unit. Remove the slot-head screw at the bottom of the door, and slide the door down and out. This will expose a portion of the logic board, on which the I/O connectors are located (see diagram). The keyboard plugs into P11. The connector is keyed and inserts easily; don't force it.

c. Plug the line cord into a standard three-pin 115VAC wall socket; if not possible, use a two-pin socket with proper ground wire attached and connected to ground.

d. Slide the power switch to ON (to the right).

e. After allowing about one minute warm-up, turn the brightness control clockwise until the raster appears; then back it off until the raster just disappears. A blinking cursor should be visible in the upper-left corner of the screen. If not, turn the contrast control clockwise until it is. Characters may now be entered from the keyboard to the screen.

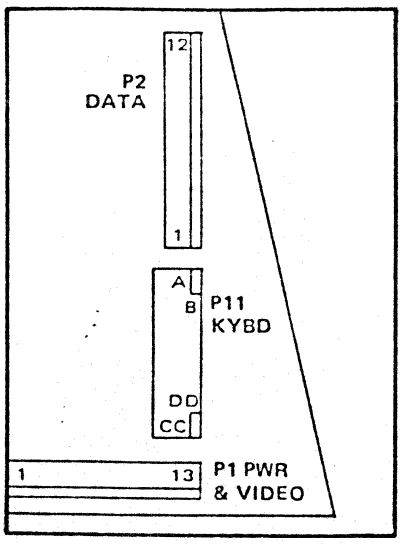

3. INITIAL CHECK-OUT

The terminal is delivered with a DATA mating connector (P2) wired to connect the serial data output of the terminal back into its input. This simulates Local operation of the terminal, with the advantage that the check-out includes the I/O interface. When a key is typed on the keyboard, its code is transmitted serially out of the terminal, looped back as a serial data input, operated on, and displayed on the screen.

Set controls: Type c9 B J P @ (c9 = 9 on the numeric pad with the CTRL-key depressed). Each character should appear at the cursor position as it is typed. The cursor shouldn't move. Typing @ returns the character that was at the cursor position (namely Space) to the screen. The terminal is now set for 300 baud Send, full-duplex I/O, and Page display.

Type Ann Arbor. You may wish to readjust the contrast control to make the characters brighter (clockwise) or dimmer (counterclockwise).

Type LF↓. The cursor should move vertically down one line.

Type RETURN. The cursor should return to beginning of line.

Type c/s M; then Ann Arbor (c/sM = M with the CTRL- and SHIFT-keys depressed). The characters should display dim. You may wish to again adjust the contrast and/or brightness controls to vary the intensity difference between the normal and the dim characters.

Type LF↓ RETURN.

Type c/s O; then Ann Arbor. The characters should display reversed (i.e., as black characters on a white background).

Type LF↓ RETURN.

Type c/sN c/sO; then Ann Arbor. The characters should display blinking.

Depress→. The cursor should move to the right (and wrap-around to the next lower line at end-of-line).

Depress←. The cursor should move to the left (and wrap-around in the same line at beginning of line).

Depress ↓. The cursor should move down (and wrap-around to the top of the screen at bottom of screen).

Depress ↑. The cursor should move up (and stop at the top of the screen).

Type cO @ L. The cursor should go to the center (12th line, 40th character position) of the screen. (To verify type ↑ 12 times and ← 40 times to get to Home.) (2440 FORMAT: Type cO ' L.)

Change to Roll display: Type c9 R @.

Type @ LF repeatedly. When the cursor reaches the bottom line, the data will roll up the screen and continue to roll up as data is entered.

Type cL. The screen should clear and the cursor return to home.

You have now exercised most of your commands and controls. Those remaining are best exercised as needed during installation.

4. INSTALLATION

All connections to the terminal are made behind the access door at the rear of the terminal case. No connectors protrude from the back to be knocked loose, damaged, or occupy extra space. The door safely clamps the cables as they issue from the case, permitting any excess lengths to be stored within the case for a neater installation.

a. Check that the power switch is OFF (to the left).

b. If the access door has not already been removed, remove it now.

c. Remove the DATA mating connector (P2). If not required for the installation, suggest saving for test, for example, taped to the inside wall of the case.

The DATA connector is a Molex P/N 09-65-1121. Its pin-out is shown in the diagram.

SDO (pin 1) is the serial data output (terminal to computer). The terminal normally holds the output at MARK and transmits an 11-unit burst, consisting of a Start bit (to SPACE), 7-bits of ASCII-coded data, even parity and 2 Stop bits (at MARK), following each key entry. The signal levels are RS232 compatible: MARK (1) = −9 ± 2V, SPACE (0) = 9 ± 2V, into a 3K ohm load.

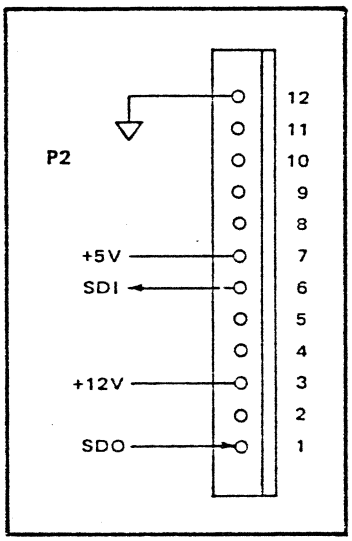

SDI (pin 6) is the serial data input (computer to terminal). The input must be ASCII-coded, asynchronous, 10-units or greater. Parity is ignored by the terminal. The signal levels must be RS232-compatible: MARK (1) = −3V to −25V. SPACE (0) = +3V to +25V.

Pin 12 is the signal common.

d. If the RS232 cable (see diagram) is to be used, plug it into P2. The standard cable (P/N 205274) is 6-feet long and terminates in a male connector (for plug-in to RS232-standard data-communications equipment). A cable terminated in a female connector (P/N 205274.01) is also available, as are other cable lengths (up to 50 feet).

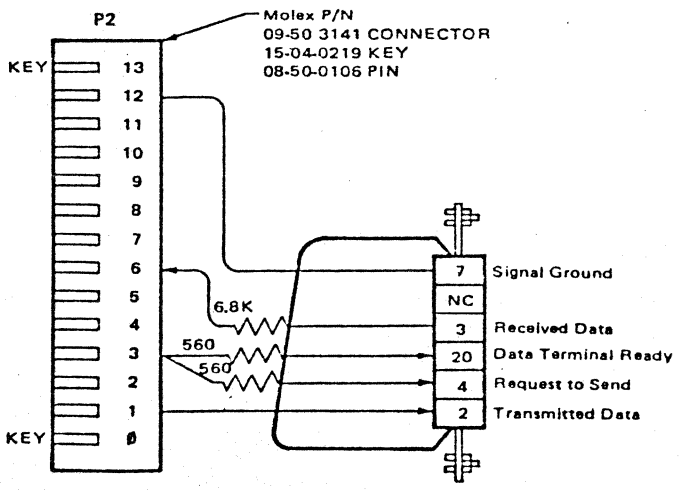

If the connection is to be made directly to P2, use the mating connector parts supplied and follow the construction of the RS232 cable diagram. To remove the jumper connecting pins 1 and 6, press lightly against the side of the pins through the slot in the connector housing and pull them free. Attach the supplied pins to the incoming wires with a suitable crimp tool (or by soldering and plier-crimping), and insert the pins into the mating connector housing until they latch.

e. Slide the power switch to ON, allow for warm-up, and operate with the host equipment.

If there's a problem, try looping the data output back into the input at the host-end of the cable (as in Section 3) to be sure it's not a cable problem. If that works, verify that the terminal and host are operating at the same baud rate (the terminal's baud rate can be changed from the keyboard) and that the host can accept even parity (transmitted by the terminal). (If no data at all is being received, verify that the host is actually transmitting by scoping SDI at P2-6.)

f. Arrange the keyboard cable toward the left side of the access opening and the data cable and line cord toward the right side. Replace the access door, being careful to keep the cables between the positioning posts on the door. Tighten the screw at the bottom of the door, to securely clamp the cables in place.

CONTROL SWITCH SETTINGS

Switches S1 to S8 select the power-up conditions of the terminal. The tables below show the normal assignments of these switches. Consult the product specification for applicability and description of functions.

	BAUD RATE	S7	S4	S3
A	110 baud	ON	ON	ON
B	300	OFF	ON	ON
C	600	ON	OFF	ON
D	1200	OFF	OFF	ON
E	1800	ON	ON	OFF
F	2400	OFF	ON	OFF
G	4800	ON	OFF	OFF
H	9600	OFF	OFF	OFF

	I/O MODE	S5	S6
J	Full-duplex	OFF	OFF
K	Half-duplex	ON	OFF
L	Local	OFF	ON
	KYBD MODE	S2	
M	TTY	OFF	
N	Full-ASCII	ON	
	DISP MODE	S1	S8
P	Page	ON	OFF
R	Roll	OFF	ON

6175 JACKSON ROAD • ANN ARBOR, MICHIGAN 48103 • TEL: 313-663-8000 • TWX: 810-223-6033
Copyright 1979: Ann Arbor Terminals, Inc.
Printed in U.S.A.

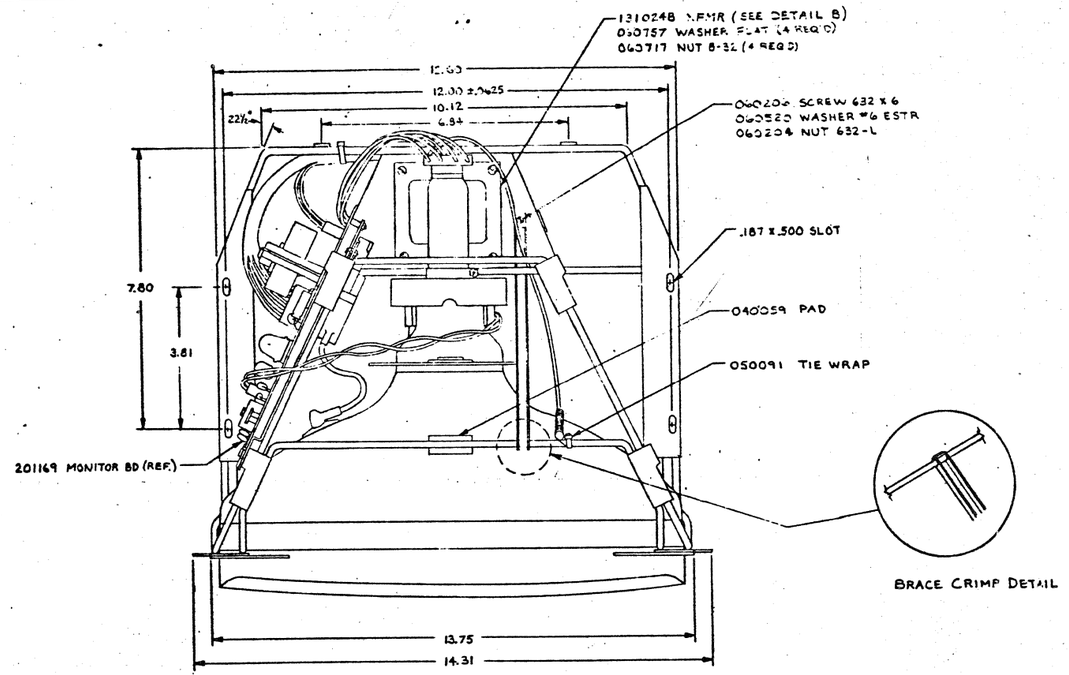

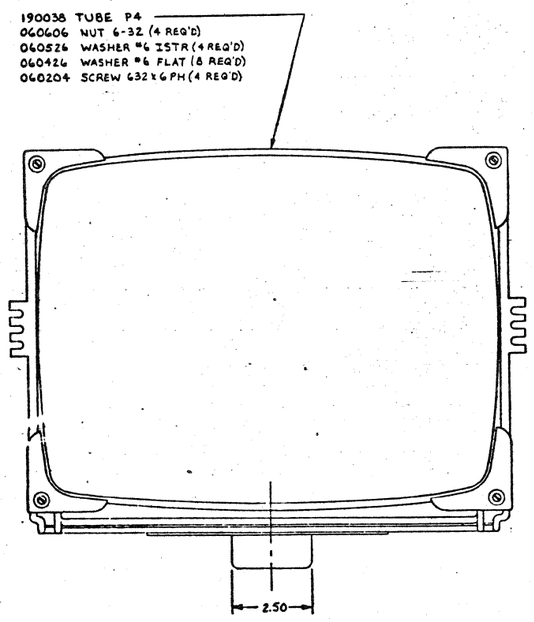

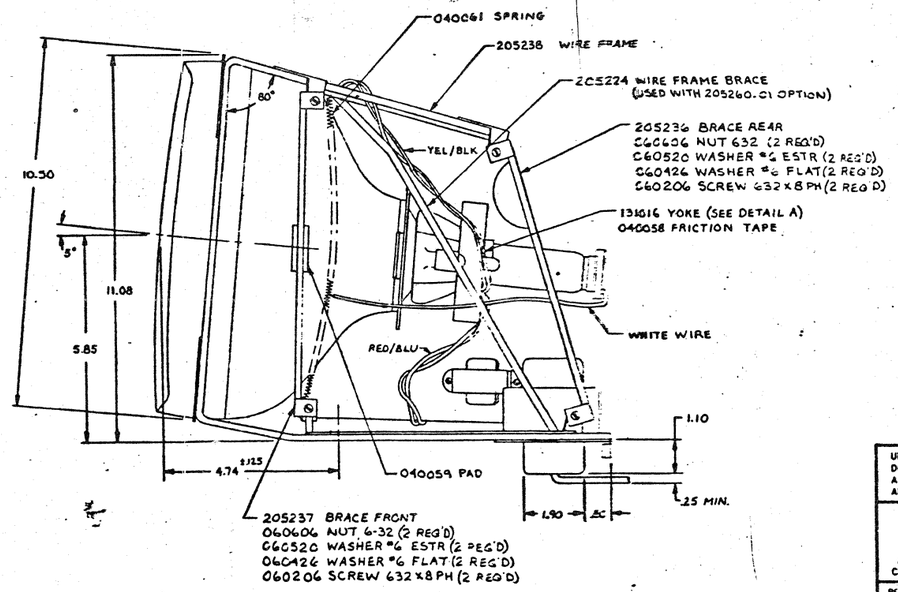

DETAIL A

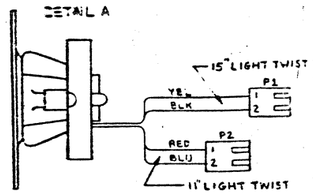

080287 CONN 2F (2 REQ'D)
080309 PIN (4 REQ'D)

DETAIL B

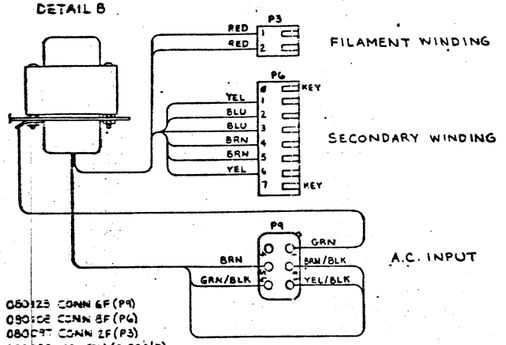

080123 CONN 6F (P9)
080108 CONN 8F (P6)
080287 CONN 2F (P3)
080058 KEY (P6) (2 REQ'D)
080016 PIN (P9) (5 REQ'D)
080058 PIN (P3, P6) (8 REQ'D)
072018 LUG #8 ISTR
050065 WIRE #22 GRN

PART NUMBER 205260D					
LET	R	REVISION	DATE	APP'D	
A	-1	XFMR WAS 131017, WIRE TO P3-2 WAS RED/BLK, WIRE TO P9-5 WAS BLK, P3TO5 WERE 4.31" LG.	11-[illegible]-77	GS	
B		FRAME WAS 205238A	11-[illegible]-77	GS	
C		FRAME WAS 205238B	11-[illegible]-78	GS	
C	-1	SPARK GAP GND SPRING ADDED	11-18-78	GS	
C	2	MECH HARDWARE AND NOTES	11-[illegible]-78	GS	
D		SEE STOCK CORRECTION 205238D & 205224B	6-[illegible]-79	GS	
D	3	1310248 XFMR WAS 131024, DELETED 150200 RSTR 2.2Ω	1-23-80	GS	

NAME	G S			J P	
DATE	1-23-80		1-29-80	1-29-80	
BY	DRAWN	CHECKED	MECH ENGR	ELEC ENGR	APPROVED

UNLESS OTHERWISE SPECIFIED: DIMENSIONS ARE IN INCHES AND INCLUDE CHEMICALLY APPLIED OR PLATED FINISHES

TOLERANCES
.X = ±
.XX = ±
.XXX = ±
ANGLES = ±
CHAMFER = ±

REMOVE ALL BURRS AND SHARP EDGES
RADII AND FILLETS .010 TO .020

DO NOT SCALE THIS DRAWING

MATERIAL

FINISH

PROPRIETARY NOTICE: THIS DOCUMENT CONTAINS PROPRIETARY INFORMATION OF ANN ARBOR TERMINALS INCORPORATED AND NEITHER THE DOCUMENT NOR SAID PROPRIETARY INFORMATION SHALL BE PUBLISHED, REPRODUCED, COPIED, DISCLOSED OR USED FOR ANY PURPOSE OTHER THAN CONSIDERATION OF THIS DOCUMENT WITHOUT THE EXPRESS WRITTEN PERMISSION OF A DULY AUTHORIZED REPRESENTATIVE OF SAID COMPANY

ANN ARBOR TERMINALS, INC.
6107 JACKSON ROAD • ANN ARBOR, MICHIGAN 48103 • 313-769-0826

FRAME ASSY

SIZE	PART NUMBER
D	205260D

SCALE 1/2 | WT | SHEET 1 OF 1

1	205281D	E-CASE
1	205280C	CASE E
1	205279B	CONN PANEL E
1	205260 D	FRAME

NAME	FE	[illegible]	FE	ANN ARBOR TERMINALS PARTS LIST	205281D
DATE	11-6-79	[illegible]	4-2-79		SHT 1 OF 1
	ENG	MFG	REL		

QTY	PART NO.	DESCRIPTION	SALES PRICE	DISCOUNT BASE	STANDARD DELIVERY
1	205281D	E-CASE			
	.01	LESS CASE/BEZEL			
1 D	205280C	CASE E			

PURPOSE: To provide unit with frame and connector panel only, for OEM packaging.

MODIFICATIONS: Delete parts as indicated.

NAME	EJ	LF	RJ	ANN ARBOR TERMINALS	205281D.01
DATE	11-6-79		1-3-81	OPTION LIST	SHT 1 OF 1
	ENG	MFG	REL		

QTY	PART NO.	DESCRIPTION	SALES PRICE	DISCOUNT BASE	STANDARD DELIVERY
1	205280C	CASE E			
1	205253A1	CASE			
1	205252A	BEZEL			
1	205251A	DOOR			
1	200139B	TAG SERIAL			
2	060916	INSERT 832H8-12			
2	060915	INSERT 632H7-10			
2	060757	WASHER #8 FLAT			
2	060748	SPEED NUT 8-32			
4	060709	SPACER #10 x 23/64			
2	060595	SCREW #10 x 16 PH			
4	060599	SCREW #10 x 16 PPH			
2	060526	WASHER #6 ISTR			
2	060408	SCREW 832 x 12 PH			
2	060204	SCREW 632 x 6 PH			
1	040080	CARTON OUTER			
1	040079	CARTON INNER			
8	040078	CORNER PAD			
-	040042	PAINT AA WHT			
-	040028	PAINT AA BLK			
-	040026	SPRAY FILL			
-	040020	REDUCER			
-	040019	CATALYST			

NAME	EJ		BP	ANN ARBOR TERMINALS	205280C
DATE	2-12-79	12-14-79	11-29-79	PARTS LIST	SHT 1 OF 1
	ENG	MFG	REL		

QTY	PART NO.	DESCRIPTION	SALES PRICE	DISCOUNT BASE	STANDARD DELIVERY
1	205279B	CONN PANEL E			
1	205278B	CONN PANEL			
1	150857	POT 100K 3/4 (RV2)			
1	150856	POT 1.0K 3/4 (RV1)			
1	080122	CONN 6M (P9)			
1	080108	CONN 8F (P8)			
2	080088	KEY (P8)			
6	080032	PIN (P8)			
5	080012	PIN F (P9)			
2	072021	LUG #6 ISTR			
1	070049	BREAKER			
1	070035	SWITCH 3/4			
1	061018	CABLE CLAMP			
3	060606	NUT 632			
2	060604	NUT 440			
1	060520	WASHER #6 ESTR			
2	060501	WASHER #4 ISTR			
1	060210	SCREW 632 x 12 PH			
2	060002	SCREW 440 x 4 PH			
-	050186	CABLE 6			
1	050031B	LINE CORD 8			

NAME	EZ	[illegible]	SAY
DATE	2-12-79	1-18-80	1-18-80
	ENG	MFG	REL

ANN ARBOR TERMINALS
PARTS LIST

205279B
SHT 1 OF 1

PART NUMBER	205279A				
LET	REVISION	DATE	DRN	CHK	ENG
R					

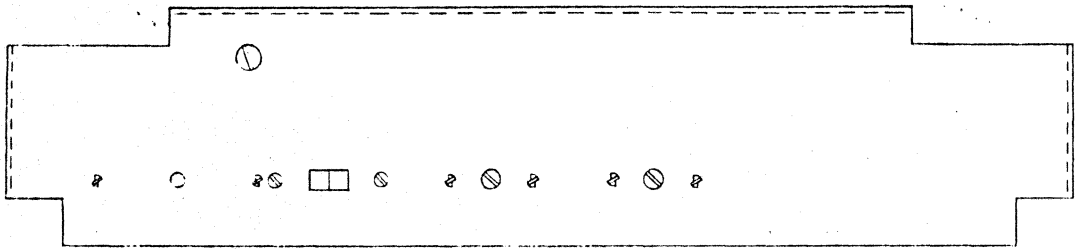

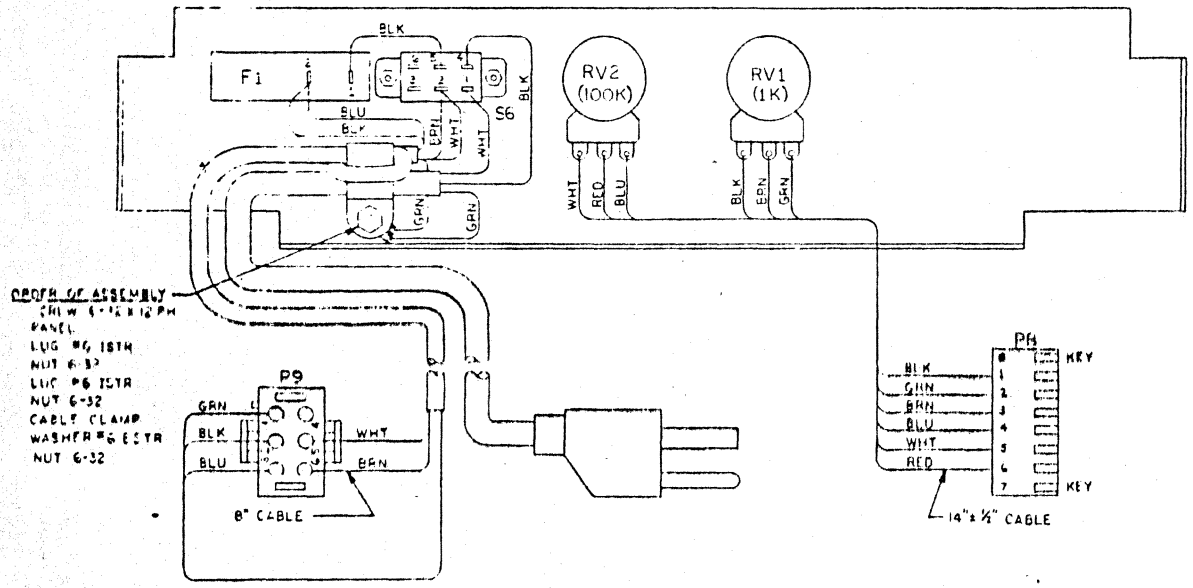

NOTES: 1. FOR 230 VAC OPERATION MOVE BLU WIRE (F1-2) AND BRN WIRE (S6-2) TO S6-6.
2. GREEN WIRE OF LINE CORD MUST BE 1" LONGER THAN OTHER WIRES.

UNLESS OTHERWISE SPECIFIED, DIMENSIONS ARE IN INCHES AND INCLUDE CHEMICALLY APPLIED OR PLATED FINISHES

TOLERANCES
.X = ±
.XX = ±
.XXX = ±
ANGLES = ±
CHAMFER = ±

REMOVE ALL BURRS AND SHARP EDGES
RADII AND FILLETS .010 TO .020

DO NOT SCALE THIS DRAWING

MATERIAL

FINISH

PROPRIETARY NOTICE: THIS DOCUMENT CONTAINS PROPRIETARY INFORMATION OF ANN ARBOR TERMINALS INCORPORATED AND NEITHER THE DOCUMENT NOR SAID PROPRIETARY INFORMATION SHALL BE PUBLISHED, REPRODUCED, COPIED, DISCLOSED OR USED FOR ANY PURPOSE OTHER THAN CONSIDERATION OF THIS DOCUMENT WITHOUT THE EXPRESS WRITTEN PERMISSION OF A DULY AUTHORIZED REPRESENTATIVE OF SAID COMPANY.

	NAME					
DATE	1-16-78					
BY	DRAWN	CHECKED	MECH ENGR	ELEC ENGR	APPROVED	

ANN ARBOR
TERMINALS, INC.
6107 JACKSON ROAD • ANN ARBOR, MICHIGAN 48103 • 313 769 0928

CONN PANEL E

SIZE	PART NUMBER
C	205279A

SCALE | WT | SHEET 1 OF 1

QTY	PART NO.	DESCRIPTION	SALES PRICE	DISCOUNT BASE	STANDARD DELIVERY
1	205260D4	FRAME			
1	205236E	WIRE FRAME			
1	205237B	BRACE FRONT			
1	205236B	BRACE REAR			
1	190038	TUBE P4			
1	131024B	XFMR			
1	131016	YOKE			
1	080123	CONN 6F (P9)			
1	080108	CONN 8F (P6)			
3	080097	CONN 2F (P1,2,3)			
2	080088	KEY (P6)			
12	080032	PIN (P1,2,3,6)			
5	080010	PIN (P9)			
1	072018	LUG #8 ISTR			
3	060756	WASHER #8 ISTR			
4	060717	NUT 832			
4	060757	WASHER #8 FLAT			
16	060606	NUT 632-L			
4	060526	WASHER #6 ISTR			
12	060520	WASHER #6 ESTR			
12	060426	WASHER #6 FLAT			
6	060206	SCREW 632x8PH			
4	060204	SCREW 632-6PH			
2	050091	TIE WRAP			
-	050065	WIRE #22 GRN			
1	040061	SPRING GND			
-	040059	PAD			
-	040058	FRICTION TAPE			

	ENG	MFG	REL	ANN ARBOR TERMINALS PARTS LIST	205260D4 SHT 1 OF 1
NAME	[illegible]	[illegible]	[illegible]		
DATE	9-19-80	9-14-80	11-14-80		

QTY	PART NO.	DESCRIPTION	SALES PRICE	BASE	DELIVERY
1	201169D5	MONITOR BD			
1	205233B	XSTR PLATE			
1	205232C	HEAT SINK			
1	201168D	PC BOARD			
1	180113	IC 1391 (IC3)			
1	180112	IC 7905 (IC1)			
1	180111	IC 7912 (IC2)			
1	180104	IC 555 (IC4)			
1	170028	XSTR MPSU05 (Q5)			
6	170027	XSTR MPSA20 (Q7,12,13,14,15,17)			
1	170026	XSTR MPSA42 (Q16)			
1	170025	XSTR TIP145 (Q11)			
1	170024	XSTR MPSA13 (Q3)			
1	170022	XSTR TIS132 (Q1)			
1	170021	XSTR TIP105 (Q10)			
1	170020	XSTR TIP41C (Q4)			
1	170019	XSTR TIP56A (Q6)			
1	160049	DIODE, LOW LEAKAGE (D15)			
2	160045	DIODE 1N4936 (D3,14)			
1	160036	MONO-REC-R (D4)			
2	160034	DIODE V332X (D1,2)			
4*	160027	DIODE 1N5198 (D6,8,10,12)			
1	160004	DIODE 1N4148 (D16)			
4*	160003	DIODE 1N4001 (D5,7,9,11)			
1	150921	VDR 60V (R80)			
1	150910	POT 250K (RV4)			
1*	150909	POT 50K (RV5)			
1*	150908	POT 5.0K (RV7)			
2*	150904	POT 500 (RV8,9)			
1*	150855	POT 20M (RV3)			
2	150665	RSTR 22M (R62,69)			
1*	150518	RSTR 15 1W (R28)			
1	150499	RSTR 2.2 (R23)			
1	150335	1M ½W (R79)			
3*	150304	RSTR 51K ½W (R57)			
3	150263	RSTR 1.0K ½W (R56,58,88)			
2	150283	RSTR 6.8K ½W (R2,59)			
1	150128	RSTR 560K (R16)			
2	150118	RSTR 220K (R51,76,81)			
1	150116	RSTR 180K (R65)			
1*	150114	RSTR 150K (R46)			
1*	150110	RSTR 100K (R32)			
1*	150106	RSTR 68K (R37)			
2*	150102	RSTR 47K (R6,72)			
3	150098	RSTR 33K (R14,20,77)			
2*	150094	RSTR 22K (R34,64)			
1*	150088	RSTR 12K (R31)			
2*	150086	RSTR 10K (R47,83)			
1	150082	RSTR 6.8K (R3)			
1	150080	RSTR 5.6K (R48)			

QTY	PART NO.	DESCRIPTION	SALES PRICE	BASE	DELIVERY
1*	150074	RSTR 3.3K	(R33,87)		
1*	150073	RSTR 3.0K	(R1,25)		
1*	150071	RSTR 2.4K	(R26)		
3*	150070	RSTR 2.2K	(R43,61,73)		
1*	150069	RSTR 2.0K	(R41)		
4*	150066	RSTR 1.5K	(R30,39,42,10)		
1*	150065	RSTR 1.3K	(R40)		
7*	150062	RSTR 1.0K	(R27,44,66,74,84,85,86)		
2*	150058	RSTR 680	(R49,82)		
1*	150054	RSTR 470	(R35)		
1	150050	RSTR 330	(R36)		
1	150046	RSTR 220	(R63)		
1	150042	RSTR 150	(R24)		
1*	150038	RSTR 100	(R29)		
1	150034	RSTR 68	(R13)		
2	150026	RSTR 33	(R4,78)		
1*	150014	RSTR 10	(R68)		
2*	140178	CPTR 100MF 25V EL	(C8,25)		
2	140115	CPTR .005 MF 2 KV CD	(C5,37)		
1	140113	CPTR 2700 PF CD	(C36)		
1	140112	CPTR 1000 PF CD	(C48)		
4*	140107	CPTR 5000PF CD	(C2,21,22,38)		
2*	140106	CPTR 820PF CD	(C29,55)		
3	140408	CPTR 22MF 16EL	(C14,31,34)		
1	140104	CPTR 470PF	(C57)		
1	140103	CPTR 390 PF CD	(C40)		
1*	140102	CPTR 220 PF CD	(C50)		
1	140097	CPTR 10PF CD	(C56)		
2	140044	CPTR 640MF 25V EL	(C30,33)		
1	140033	CPTR .033MF 400V 5% PP	(C27)		
1*	140028	CPTR .027MF 400V MY	(C20)		
1	140027	CPTR 7200MF 25V EL	(C35)		
1	140026	CPTR 5000MF 16V EL	(C32)		
1	140025	CPTR 10MF 250V EL	(C26)		
1	140061	CPTR 2200MF	(C11)		
1	140022	CPTR 330MF 50V EL	(C24)		
1*	140018 B	CPTR 6800PF 33 V 5% PS	(C16)		
2	140017	CPTR .18MF 100V 5% PP	(C9,10)		
1	140016	CPTR 5MF 50V PL	(C23)		
1*	140015	CPTR 6800PF 100V PL	(C17)		
6*	140014	CPTR 0.1MF 100V PL	(C4,18,19,41,46,53)		
1	140013	CPTR .22MF 25V 10% MY	(C47,52)		
1	140001	CPTR 2200 PF MY	(C54)		
1	131027	COIL 27UH	(L4)		
1	131022	LINEARITY COIL	(L3)		
1	131021B	WIDTH COIL	(L2)		
1*	131020	BOBBIN	(T1)		
1*	131019	CORE	(T1)		
1	131018B	INDTR	(L1)		
1	131023B	FLYBACK	(T2)		

NAME	[illegible]	[illegible]	[illegible]	ANN ARBOR TERMINALS	201169D5
DATE	4/22/80	[illegible]	4-11-80	PARTS LIST	SHT 2 OF 3
	ENG	MFG	REL		

1	080173	CONN 3F	
1	080172	CONN 3M	
1	080137	CRT SCKT	
4*	080099	CONN 2M	(P1,2,3,7)
2*	080098	CONN 6M	(P6,8)
1*	080097	CONN 2F	(P7)
2	080032	PIN	(P7)
3	080012	PIN	
3	080010	PIN	
1	072027	TERMINAL STRIP	
1	072015	SOLDER LUG	
1	072005	CORONA CUP	(D4)
1	061024	CABLE CLAMP	
12*	060791	STANDOFF DIODE	
2*	060699	STANDOFF 632x6	
6*	060615	NUT 632-S	
5*	060606	NUT 632-L	
8*	060604	NUT 440	
10*	060526	WASHER #6 ISTR	
4*	060520	WASHER #6 ESTR	
5*	060501	WASHER #4 ISTR	
3*	060206	SCREW 632x8PH	
2*	060204	SCREW 632x6PH	
7*	060202	SCREW 632x4PH	
2*	060184	WASHER #6 NYS	
3*	060152	SCREW 440x4ST	
2*	060093	WASHER #6 NY	
1*	060010	SCREW 440x12PH	
1	060004	SCREW 440x6PH	
4*	060002	SCREW 440x4PH	
4*	060195	WASHER SHLDR	
A/R	050186	CABLE 6	
A/R	050106	WIRE #32	(F1,2,3,4)
2*	050094	CABLE TIE	
3*	050091	CABLE TIE	
A/R	050105	WIRE #30 MAGNET	
A/R	050066	WIRE #22 BLUE	
A/R	050064	WIRE #22 YELLOW	
A/R	050063	WIRE #22 ORANGE	
A/R	050040	WIRE #26 BLK	
15*	050000	JUMPER	(J1,2,3,4,5,6,7,8,9,10,11,12,13,14,15,D13)
A/R	040072	GLUE	
A/R	040070	TAPE ½-MYLAR	(T1)
A/R	040069	TAPE 2-TEFLON	
A/R	040062	RTV 108	
A/R	040052	BEADS	
A/R	040033	TAPE, CPTR MTG	
A/R	040004A	SILOCONE - WHITE	

NAME				ANN ARBOR TERMINALS	201169D 5
DATE	4/23/80	4-29-80	4-11-80	PARTS LIST	SHT 3 OF 3
	ENG	MFG	REL		

QTY	PART NO.	DESCRIPTION	SALES PRICE	DISCOUNT BASE	STANDARD DELIVERY
1	201169D .05	MONITOR BD MODEL 500			
1 A	080134	CONN 14F (P1)			
1 A	080088	KEY (P1)			
9 A	080032	PIN (P1)			
A/R A	050186	CABLE 6			

PURPOSE: To configure Monitor board for use with the 201179B Terminal board.

MODIFICATIONS:
1. Add parts as indicated.
2. See below for cable assembly.
3. Reference 201169D Monitor Bd. (sht 1), for detail B and C.

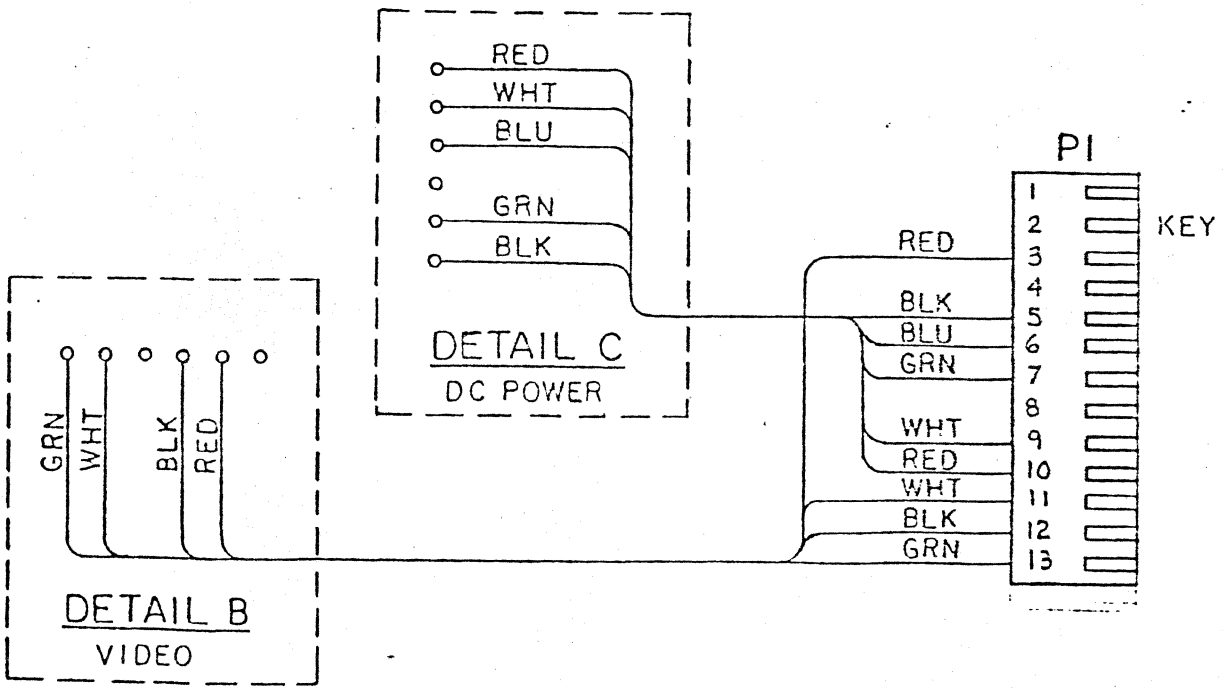

NAME	EZ	[illegible]	[illegible]	ANN ARBOR TERMINALS OPTION LIST	201169D.05
DATE	3-23-79	11-18-80	1-14-80		SHT 1 OF 1
	ENG	MFG	REL		

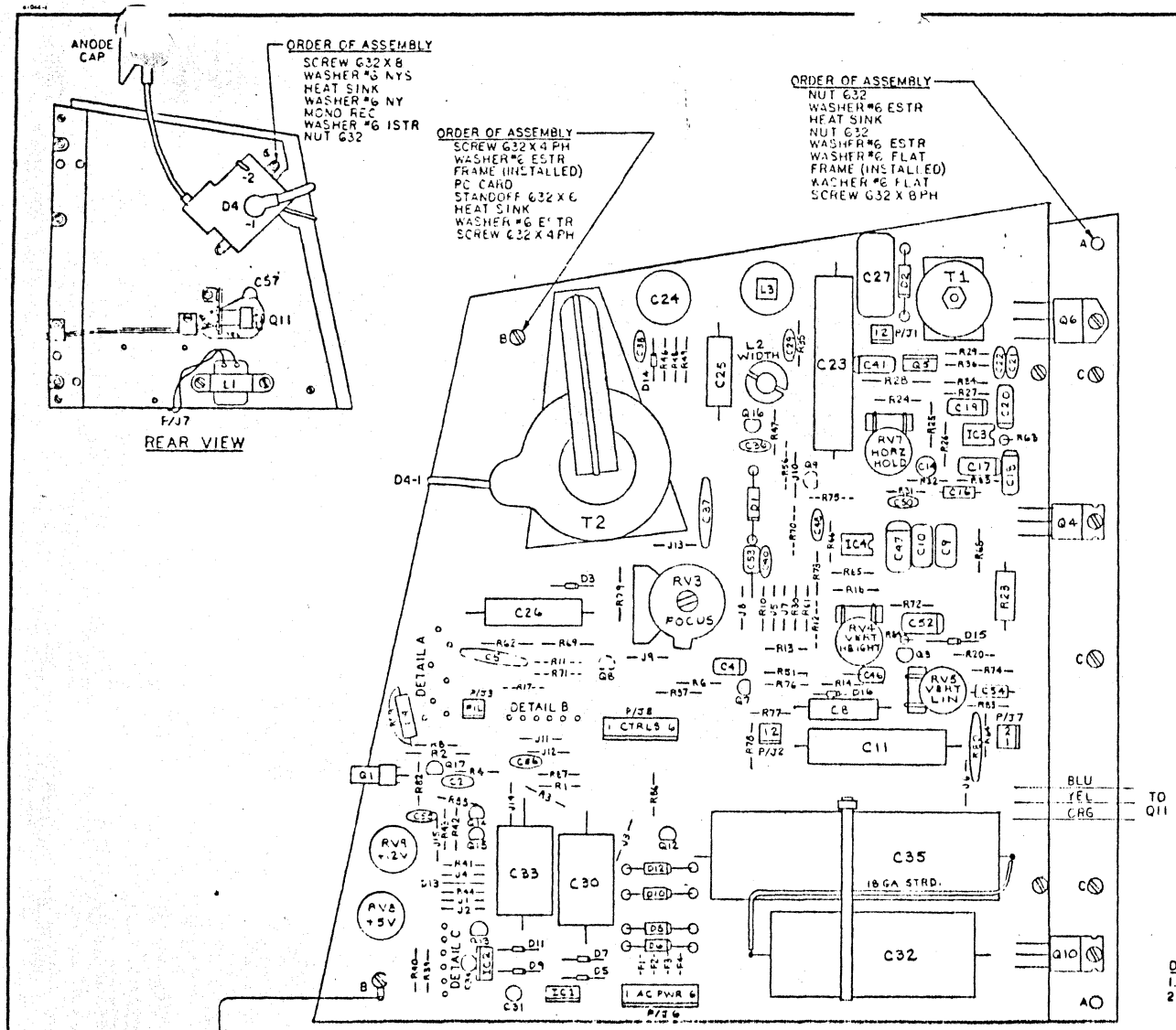

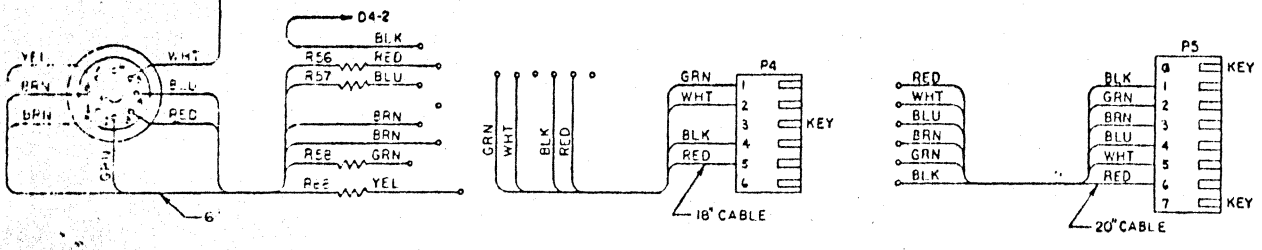

DETAIL A
CRT SOCKET

DETAIL B
VIDEO (P4)
.01/.02 = CONN GM

DETAIL C
DC PWR (P5)
NOT .01/.02

PART NUMBER	20116				
LET	R	REVISION	DATE	DRN	
D	1	MECH HARDWARE CHANGES	8-24-79		
D	2	D13 WAS 1N4004, C14 WAS TANTALUM, Q11 WAS MOUNTED ON XSTR PLATE, R79 WAS 1M, ¼W, C16 WAS 50V, R63 WAS 68Ω.	8-24-79	GS	
D	3	SEE SHT 2	9-19-79	GS	
D	3	DRAWING ERRORS CORRECTED	12-12-79	GS	
D	4	SEE SHT 2	2-1-80	GS	
D	5	SEE SHT 2	4-11-80	GS	

DISASSEMBLY
1. SUBASSY FROM FRAME: REMOVE NUTS AT A (2 PLACES) & SCREWS AT B (2 PLACES)
2. PCB FROM SUBASSY: REMOVE SCREWS AT B&C (5 PLACES)

UNLESS OTHERWISE SPECIFIED: DIMENSIONS ARE IN INCHES AND INCLUDE CHEMICALLY APPLIED OR PLATED FINISHES

TOLERANCES
.X = ±
.XX = ±
.XXX = ±
ANGLES = ±
CHAMFER = ±

REMOVE ALL BURRS AND SHARP EDGES
RADII AND FILLETS .010 TO .020

DO NOT SCALE THIS DRAWING

MATERIAL

FINISH

PROPRIETARY NOTICE: THIS DOCUMENT CONTAINS PROPRIETARY INFORMATION OF ANN ARBOR TERMINALS INCORPORATED AND NEITHER THE DOCUMENT NOR SAID PROPRIETARY INFORMATION SHALL BE PUBLISHED, REPRODUCED, COPIED, DISCLOSED OR USED FOR ANY PURPOSE OTHER THAN CONSIDERATION OF THIS DOCUMENT WITHOUT THE EXPRESS WRITTEN PERMISSION OF A DULY AUTHORIZED REPRESENTATIVE OF SAID COMPANY.

NAME	GS				
DATE	8-17-78				
BY	DRAWN	CHECKED	MECH ENGR	ELEC ENGR	APPRO

ANN ARBOR TERMINALS INC
6107 JACKSON ROAD • ANN ARBOR, MICHIGAN 48103 • 313-769-0928

MONITOR BD

SIZE C | PART NUMBER 201169D

SCALE 1:1 | WT

PART NUMBER	201169D				
LET	R	REVISION	DATE	BY	APP'D
D	1	SEE SHT 1	4-24-79	GS	
D	2	SEE SHT 1	8-14-79	GS	
D	3	ADDED CST	9-19-79	GS	WK
D	3	DRAWING ERROR CORRECTED	12-12-79	GS	
D	4	ADDED R63B AND R76B. C31 AND C34 WERE 1uF	2-1-80	GS	
D	5	DELETED R62B, R76B. R63 WAS 100	4-11-80	GS	

.02 ONLY
VERT SYNC INV.

+12(A) R12 4.7K R73 2.2K TO IC 4.5
P/J4 R17 4.7K Q8 MPSA20 SYNC INV.
C51 470pf R71 2.2K R11 10

110V 60 HZ SC 1.5A
RED RED P/J3
BRN YEL BRN BLU YEL BLU P/J6

P/J4: VS* J9; HS* P/J8-2; VDG R30; VD P/J8-1
P/J8: RV1 HIGH P/J4-5; RV1 LOW P/J4-4; RV1 CENTER R1; RV2 LOW GND; RV2 HIGH R37; RV2 CENTER R6

+150 J11 R2 6.8K ½W
C56 10pf R81 220K
R87 3.3K
+12 J14 Q17 MPSA20
Q1 TIS132 VID OUT
P/J3 L4, 27µH R59 6.8K ½W +150 J8
R1 3.0K
R3 6.8K R82 680 R4 33 C2 .005
R37 68K
RV2 BRIGHT 100K P/J8-6 R6 47K P/J8-4 P/J8-5 J12
+24 C53 .1 R10 1.5K C4 .1 100V
D14 1N4936 J13
R83 10K C46 100V R14 33K D16 IN4148 C54 2200pf
Q7 MPSA20 BLANKER
R77 33K R78 33
C33 .005 R46 150K C37 .005 2KV
J5 R51 220K R76 220K .02*68K C40 390pf 1KV
C36 .0027 R47 10K Q16 MPSA42 DYNAMIC FOCUS
TO C23 R48 5.6K R49 680

CRT 190038 .02-190039
+18 KV O BEAM
360M D4 MONO REC
R66 1K ½W R55 1K ½W R56 1K ½W R57 51K ½W
RV3 FOCUS 20M R79 1M ½W
R62 22M 1W R69 22M 1W C5 .005 2KV

+12(A) +12
R13 68 C8 100 25V
R80 VDR 60V R64 22K
P/J7 BLK BLK L1
RV4 250K HT. R16 560K
R65 180K R66 1K
D15 LOW LEAKAGE DIODE C9 .18 5%
R84 1K Q3 MPSA13 VERT DRIVER
RV5 50K LIN R20 33K R68 10 H.S. Q4 TIP41C VERT OUT
C11 1000 16V P/J2 RED BLU VERT YOKE
R74 1K R23 2.2 1W
C10 .18 5%
C52 .22 10%
C47 .22
C48 .001
R72 47K
R73 2.2K

P/J4 VD P/J8-1 P/J8-3 RV1 CONT 1K P/J8-2 VDG

VS* P/J4 J9 R73 2.2K IC4 555 VERT OSC.

HS* P/J4 R30 L5K J10 C50 220pf
RG1 2.2K
HORZ OSC. IC3 MC1391P
C21 .005
R36 330 Q5 MPSU05 HORZ DRIVER
20T #30 (OUTSIDE) GAP .0025 CENTER CORE HOT GLUE EDGES
T1 80T #30 (INSIDE) Q6 TIP56 HORZ OUT
C41 .1 R27 1K RG3 220 1/2W
R34 22K C20 .027 C19 .1
R28 15 1W R24 150 C14 22 16V
+12 +6 SOURCE
C27 .033 400V RETRACE CAP
D2 V332X
R29 100 C22 .005
R25 3K R26 2.4K R33 3.3K R32 100K
RV7 HORZ HOLD 5K R31 12K
C16 .0068 5% polystyrene C17 .0068 C18 .1
TO C36 TO C23 C23 .5 5KV S CAP
P/J1 YEL BLK HORZ YOKE

HIGH VOLTAGE TRANSFORMER T2
2 21T 29OT 4 30T 29T 1 +24 SOURCE
L3 LIN L2 WIDTH C29 82pf R35 470 J7 D1 V332X
C25 100 25V C24 330 50V
D3 IN4936 +150 SOURCE C26 10 250V

P/J6 WF3 WF4 D9 IN4001 D11 IN4001 D10 IN5198 D12 IN5198
C35 7200 25V
Q11 TIP-145 H.S. C57 470pf R41 2K J6 +12V
J15 C55 820pf
RV9 500 +12V ADJ
R85 1K Q14 MPSA20 Q15 MPSA20 R43 2.2K R42 1.5K
P/J5 GND GND -12V SOURCE
IN OUT IC2 7912 C33 640 25V C34 22µf 16V

.04 ONLY
P/J6 WF1 WF2 D5 IN4001 D7 IN4001 D6 IN5198 D8 IN5198
C32 5000 16V
Q10 TIP-105 H.S. D13 +12 P/J5 +12V +5V SOURCE
R44 1K RV8 500 +5V ADJ R40 1.3K
R86 1K Q12 MPSA20 Q13 MPSA20 R39 1.5K
IN OUT IC1 7905 C30 640 25V C31 22µf 16V

.02 ONLY
HORZ SYNC INV.
+12 R56 4.7K C50 220pf TO IC3.3
P/J4 R30 4.7K R70 2.2K T.P.1 R75 10

NOTES:
1. MONITOR REFERENCE
.01-P4, SEPARATED NEGATIVE SYNC
.02-P39, SEPARATED POSITIVE SYNC
.04-MODEL 400
2. .02-REMOVE L2, JUMPER PIN 1-2
3. UNLESS OTHERWISE SPECIFIED:
ALL RESISTOR ARE IN OHMS, ¼W, 5%
ALL CAPACITORS ARE IN MFD'S
4. HORZ HOLD SFT UP: GND T.P.1 ADJUST RV7 FOR SLOW BAR ROLL
5. SET RASTER SIZE FOR 7"X10"
6. R63 USED TO CENTER VIDEO ON RASTER
7. R62 MAY BE JUMPERED OR OMITTED FOR PROPER G2 VOLTAGE.

UNLESS OTHERWISE SPECIFIED: DIMENSIONS ARE IN INCHES AND INCLUDE CHEMICALLY APPLIED OR PLATED FINISHES
TOLERANCES .X ± .XX ± .XXX ± ANGLES ± CHAMFER ±
REMOVE ALL BURRS AND SHARP EDGES RADII AND FILLETS .010 TO .020
DO NOT SCALE THIS DRAWING
MATERIAL
FINISH

PROPRIETARY NOTICE: THIS DOCUMENT CONTAINS PROPRIETARY INFORMATION OF ANN ARBOR TERMINALS INCORPORATED AND NEITHER THE DOCUMENT NOR SAID PROPRIETARY INFORMATION SHALL BE PUBLISHED, REPRODUCED, COPIED, DISCLOSED OR USED FOR ANY PURPOSE OTHER THAN CONSIDERATION OF THIS DOCUMENT WITHOUT THE EXPRESS WRITTEN PERMISSION OF A DULY AUTHORIZED REPRESENTATIVE OF SAID COMPANY

NAME	G.S				
DATE	8-16-79				
BY	DRAWN	CHECKED	MECH ENGR	ELEC ENGR	APPROVED

ANN ARBOR TERMINALS, INC
6107 JACKSON ROAD • ANN ARBOR, MICHIGAN 48103 • 313-769-6700

MONITOR BD

SIZE D | PART NUMBER 201169D | SCALE NT | SHEET 2 OF 2

QTY	PART NO.	DESCRIPTION	SALES PRICE	DISCOUNT BASE	STANDARD DELIVERY
1	201179B3	TERMINAL BD			
1	201178B	PC CARD			
2	180215	IC TMS 2708	(ICA1,D2)		
1	180201	IC TMS8080A	(ICD4)		
4	180200	IC TMS4060	(ICB2,B3,B4,B5)		
2	180123	IC 74LS02	(ICC11,F8)		
1	180121	IC 74LS259	(ICC9)		
1	180120	IC 74LS123	(ICD8)		
1	180119	IC 74LS155	(ICC3)		
1	180116	IC 74LS86	(ICE8)		
2	180108	IC 74LS258	(ICC8,D5)		
2	180107	IC 74LS173	(ICA3,A4)		
1	180102	IC 75188	(ICC10)		
1	180097	IC 74LS166	(ICE2)		
3	180096	IC 74LS74	(ICD6,E6,F3)		
3	180095	IC 74LS00	(ICE9,F1,H2)		
1	180094	IC TP4512AN	(ICA5)		
2	180092	IC 74LS175	(ICE1,H1)		
1	180091	IC 74LS174	(ICD3)		
6	180090	IC 74LS161	(ICE4,E5,F5,H5,H6,H7)		
1	180089	IC 74LS160	(ICF4)		
1	180088	IC 74LS151	(ICE3)		
3	180087	IC 74LS32	(ICD7,F9,H3)		
3	180086	IC 74LS10	(ICE7,F2,F6)		
2	180085	IC 74LS08	(ICE10,H4)		
2	180071	IC 74LS04	(ICF7,F10)		
2	180064	IC 7445	(ICB8,B9)		
2	180054	IC 7406	(ICB7,C4)		
3	180042	IC 74193	(ICC5,C6,C7)		
2	180015	IC MK1007P	(ICC1,C2)		
1	180011	IC TR1602B	(ICB1)		
4	170027	XSTR MPSA20	(Q1-4)		
5	160055	DIODE 5V	(D30,35,36,50,51,58)		
13	160004	DIODE 1N4148	(D3,4,5,6,8,10,12,13,14,15,17,18,19)		
1	150110	RSTR 100K	(R35)		
1	150100	RSTR 39K	(R4)		
1	150098	RSTR 33K	(R37)		
9	150094	RSTR 22K	(R11,12,13,14,15,16,17,18,51)		
1	150090	RSTR 15K	(R36)		
5	150078	RSTR 4.7K	(R27,57,58,60,62)		
4	150073	RSTR 3.0K	(R24,38,39,40)		
1	150068	RSTR 1.8K	(R6)		
3	150066	RSTR 1.5K	(R26,28,31)		
7	150064	RSTR 1.2K	(R42,43,44,45,46,47,48)		
9	150062	RSTR 1.0K	(R1,19,20,21,22,23,30,50,55)		
1	150060	RSTR 820	(R29)		

NAME	EZ	[illegible]	[illegible]	ANN ARBOR TERMINALS	201179B3
DATE	5/15/80	[illegible]	[illegible]	PARTS LIST	SHT 1 OF 2
	ENG	MFG	REL		

2	150058	RSTR 680	(R5,41)
2	150054	RSTR 470	(R2,3)
1	150050	RSTR 330	(R56)
2	150046	RSTR 200	(R32,34)
2	150042	RSTR 150	(R25,53)
1	150038	RSTR 100	(R52)
1	150034	RSTR 68	(R33)
1	150014	RSTR 10	(R54)
1	140178	CPTR 100MF 25V EL	(C6)
1	140142	CPTR 120PF MI	(C3)
7	140130	CPTR .047MF 16V CD	(C22,41,42,56,57,59,61)
2	140102	CPTR 220PF 1KV CD	(C7,9)
2	140101	CPTR 68PF 1KV CD	(C10,11)
1	140100	CPTR 25PF 1KV CD	(C8)
13	140091	CPTR 22MF 16V DT	(C1,2,20,30,31,40,50,51,52,53,54,55,4)
1	132018	XTAL 15.6MHZ	(X1)
1	080113	CONN 13M	(P1)
1	080112	CONN 12M	(P2)
1	080099	CONN 2M	(P13)
4	080082	SCKT 16	(ICA5,C1,C2,D1)
2	080079	SCKT 40	(ICB1,D4)
5	080075	SCKT 22	(ICB2-B6)
3	080074	SCKT 24	(ICA1,A2,D2)
1	080044	CONN 26	(P11)
1	070030	DIP SWITCH	(S1-8)
-	050040	WIRE #26 BLK	
-	050000	JUMPER	

NAME			
DATE	3/15/90		
	ENG	MFG	REL

ANN ARBOR TERMINALS
PARTS LIST

201179B3
SHT 2 OF 2

QTY	PART NO.	DESCRIPTION	PRICE/UNIT	USE	DELIVERY
1	201179B/C	TERMINAL BD			

.02 40 CHARS/LINE
.03 CHAR PROM MAP____ .
.04 CHAR FLD_____
.05 10 BIT MEMORY
.06 PROM TYPE-LOC 1_____
.07 PROM TYPE-LOC 2_____
.08 PROM TYPE-LOC 3_____
.09 STATUS BIT _____
.10 CTRLS_____
.11 PARITY_____
.12 CTRLS-PARALLEL_____
.13 CHAR PROM MAP-PARALLEL_____
.18 CR/LF (A)-PARALLEL
.19 DEL (S)-PARALLEL
.21 CR/LF (A)
.22 DEL (S)
.23 ACCENT_____
.26 PARALLEL INPUT
.27 PARALLEL R/O
.80 PRINTER OUTPUT
.98 50HZ REFRESH

PURPOSE: To provide instructions for performing the hardware mods called for by the various PROM option sheets. This sheet contains the common mods. If a mod called for is not on this list, it will be found attached, on a separate sheet bearing its option number (201179.NN).

MODIFICATIONS:

.02 40 CHARS/LINE. Modify board per table. J6,7 set the timing for 80 or 40 characters display across the screen. R24 is a pull-up when J7 is open; it may be deleted when J7 is installed. J24, J25 and J26 are used to set the accent clock relative to the row-video strobe for proper centering of the video. R25 is used to "fine tune" the accent timing.

J	TO / FROM	CHARS/LINE	
		80	40
J6	E2-7	F10-10	F3-6
J7	F4-14	OPN	E10-5
J24	H4-12	H1-7	H1-15
J25	H4-13	H1-2	H1-11
J26	E1-9	R25	H1-3
R24		3.0K	OPN
R25		150	OPN

.03 CHAR PROM MAP_____. Modify board per table. J22, 23 invert VCØ* to become VCØ. J13 straps address LSB (AØ) of PROM-LOC3 from the appropriate input signal. J18 straps VCØ as a testable discrete input to the uP.

J	TO / FROM	MAP	
		A	B
J13	D2-8	H5-14	F1-11
J18	C8-2	OPN	F1-11
J22	F1-13	OPN	H7-14
J23	F1-12	OPN	F1-13

NAME	[illegible]	[illegible]	[illegible]	ANN ARBOR TERMINALS	201179B/C.NN
DATE	6-13-80	[illegible]	6-3-80	OPTION LIST	SHT 1 OF 6
	ENG	MFG	REL		

.04 CHAR FLD . Modify board per table. J3 sets the field height for 10 lines (B60) or 12 lines (D60,D50). For D60, the field height is 12 lines during display and 10 lines during vertical blank. J4, J5 set the display for 24 lines (B60, D50) or 20 lines (D60).

J	TO / FROM	CHAR FLD		
		B60	D60	D50
J3	H5-4	HI	F7-11	GND
J4	H6-4	HI	GND	HI
J5	H6-5	GND	HI	GND

.05 10 BIT MEMORY. Modify board per table. J8 selects the input to address A8 of the character generator PROM. J9 selects the input (D06 or GND) to the uP data input multipexer.

J	TO / FROM	MEMORY WIDTH	
		8 BITS	10 BITS
J8	D2-23	C1-7	*
J9	D5-6	GND	*
IC B6		OPN	TMS 4060
IC D1		OPN	MK 1007

* For 10 BIT MEMORY, remove J8 if present (on back of board near D1) and J9 (located between C8 and D5).

.06 PROM TYPE-LOC 1 . Modify board per table. J40 selects the upper address limit to be used as Chip Select. J41, J42 compensate for pin-out differences (CS* and A10) between the 2708 and TMS2716 PROMs.

J	TO / FROM	PROM TYPE	
		2708	TMS2716
J40	H3-5	B2-21	B2-2
J41	A1-18	GND	H3-6
J42	A1-20	H3-6	B2-21

.07 PROM TYPE-LOC 2 . Modify board per table. J48, J49 compensate for pin-out differences (CS* and A10) between the 2708 and TMS2716 PROMs.

J	TO / FROM	PROM TYPE	
		2708	TMS2716
J48	A2-18	GND	H3-8
J49	A2-20	H3-8	B2-21

.08 PROM TYPE-LOC 3 . Modify board per table. J10 selects Chip Select (always enabled) for 2708 and address A10 for TMS2716. J11 is used with the 2708 to provide for video to be displayed below the normal lowest line of video (i.e. on lines 8 and 9 of Ø-9). It should be removed when using a TMS2716.

J	TO / FROM	PROM TYPE	
		2708	TMS2716
J10	D2-20	GND	H5-11
J11	E7-3	E8-8	HI

.09 STATUS BIT . Modify board per table. J17-J21 are used as testable discrete inputs to the uP for a variety of purposes.

J	BIT NO.	TO / FROM	INPUT SIGNAL			
			VCØ	LC3*	HC7*	LAST
J17	0	D5-2	E7-2	F7-6	E10-9	H5-15
J18	1	C8-2	E7-2	F7-6	E10-9	H5-15
J19	2	D5-14	E7-2	F7-6	E10-9	H5-15
J20	4	D5-11	E7-2	F7-6	E10-9	H5-15
J21	6	D5-5	E7-2	F7-6	E10-9	H5-15

.10 CTRLS . Set Dip switch (S1-8) in accordance with the letters following the CTRLS descriptor and the following tables.

	BAUD RATE	S7	S4	S3
A	110 Baud	ON	ON	ON
+ B	300	OFF	ON	ON
C	600	ON	OFF	ON
D	1200	OFF	OFF	ON
E	1800	ON	ON	OFF
F	2400	OFF	ON	OFF
G	4800	ON	OFF	OFF
H	9600	OFF	OFF	OFF

	I/O MODE	S5	S6
+ J	Full-Duplex	OFF	OFF
K	Half-Duplex	ON	OFF
L	Local	OFF	ON

	KYBD MODE	S2
+ M	TTY	OFF
N	Full-ASCII	ON

	DISP MODE	S1	S8
P	Page	ON	OFF
+ R	Roll	OFF	ON
S	Scroll	OFF	OFF

+ Standard
* Not available on all models. Consult specs.

.11 PARITY . Modify board per table. J33 selects (MARK, SPACE) or disables (EVEN, ODD) the 8th bit of data. J30 sets the 8th bit of data HI (MARK) or at GND (SPACE). J34 selects EVEN or ODD for the Parity Bit.

J	TO / FROM	PARITY			
		EVEN	ODD	MARK	SPACE
J30	B1-33	N/A	N/A	HI	GND
J31	B1-35	GND	GND	HI	HI
J33	B1-38	GND	GND	HI	HI
J34	B1-39	HI	GND	N/A	N/A

.12 CTRLS - PARALLEL INPUT . Install jumpers in accordance with the letters following the CRTLS descriptor and the following tables.

	BAUD RATE	FROM E3-14 TO:	FROM F2-2 TO:
A	110 Baud	E3-12	D3-5
+ B	300	E3-13	D3-10
C	600	E5-14	D3-10
D	1200	E3-15	D3-10
E	1800	E3-2	D3-5
F	2400	E3-2	D3-10
G	4800	E3-3	D3-10
H	9600	E3-4	D3-10

	MODES	FROM D5-2 TO:
+ JR	Full-Duplex/Roll	B8-12
JP	Full-Duplex/Page	B9-16
KR	Half-Duplex/Roll	B8-13
KP	Half-Duplex/Page	B8-14
LR	Local/Roll	B8-8
LP	Local/Page	B8-15

+ Standard

.13 CHAR PROM MAP - PARALLEL . Modify board per table. J22, 23 invert VCØ* to become VCØ. J13 straps address LSB (AØ) of PROM-LOC 3 from the appropriate input signal. J18 straps VCØ as a testable discrete input to the uP.

J	TO / FROM	MAP A	MAP B
J13	D2-8	H5-14	F1-11
J18	C8-2	OPN	F1-11
J22	F1-13	OPN	H7-14
J23	F1-12	OPN	F1-13

.18 CRLF (A) - PARALLEL. Modify board per table. J20 provides a testable discrete input to the uP.

J	TO / FROM	NORMAL	CRLF (A)
J20	D5-11	OPN	GND

.19 DEL (S) - PARALLEL. Modify board per table. J19 provides a testable discrete input to the uP.

J	TO FROM	NORMAL	DEL (S)
J19	D5-14	GND	OPN

.21 CRLF (A). Modify board per table. D16 is tested by uP to set for AUTO LF ON CR.

	NORMAL	CRLF (A)
D16	OPN	1N4148

.22 DEL (S). Modify board per table. D15 is tested by uP to allow Set-up Mode.

	NORMAL	DEL (S)
D15	1N4148	OPN

.23 ACCENT . Modify board per table. J15 selects the input to the DIM accent latch. J16 selects the input to the BLINK accent latch. J8 selects the use of DB7 for either lower-case or accent.

J	FROM \ TO	ALL	BLINK	R-V	DIM
J15	E1-12	C1-7	GND	C1-13	C1-13
J16	E1-13	C1-13	C1-13	C1-13	GND
J8	D2-23	OPN	C1-/	C1-7	C1-7

.26 PARALLEL INPUT. Modify board per table. J51-J59 selects the inputs to the KYBD latch. J50 selects the strobe for the inputs of the KYBD latch. J18 straps the KYBD strobe latch as a testable discrete input to the uP. J44 provides +5V to the pull-ups (D1-8, now 4.7K resistors) for the KYBD input lines. J45, J46 provide +5V and GND to the keyboard. J19 enables entry into Set-up mode. All of the components that are deleted are used for the Matrix Keyboard decoding circuitry and related signals; they are not needed for PARALLEL INPUT. S1-S8 (Dip Switch) becomes inactive.

J	FROM \ TO	INPUT	
		MATRIX	PARALLEL
J50	A4-7	D6-5	D6-11
J51	A4-14	B4-10	P11-AA
J52	A4-13	B5-13	P11-Y
J53	A4-12	B5-9	P11-Z
J54	A4-11	B5-14	P11-BB
J55	A3-14	B5-8	P11-W
J56	A3-13	B5-19	P11-DD
J57	A3-12	B5-4	P11-X
J58	A3-11	GND	P11-CC
J59	D6-11	OPN	P11-T
J18	D6-9	OPN	C8-2
J44	B8-1	N/A	+5V
J45	P11-P	R59	+5V
J46	P11-R	OPN	GND
J19	D5-14	OPN	GND
IC B8,B9		7445	OPN
IC A5		4512/LS151	OPN
D1-8		1N4148	4.7K
D9-16		1N4148	OPN
D17		1N4148	4.7K
R38-40		3.0K	OPN
R41		680	OPN
R42-48		1.2K	OPN
R49		OPN	4.7K
R59		4.7K	OPN
C11		68pf	OPN
S1-S8		A/R	N/A

.27 PARALLEL R/O. Modify board per table. J27-J29 "AND's" signals KDE* and KR* for use as a RDY/BUSY signal for Parallel R/O operation.

J	TO / FROM	TERMINAL TYPE	
		KSR	R/O
J27	H4-4	OPN	D6-9
J28	H4-5	OPN	D6-10
J29	H4-6	OPN	P11-S

.80 PRINTER OUTPUT. 1. Modify board per table. J37 provides -12V to the data connector for the PORT EXTENDER BD. J17, J29 straps CTS and CDI (from PORT EXTENDER BD) as testable discrete inputs to the uP.

J	TO / FROM	PRINTER	
		NO	YES
J37	P2-2	OPN	-12V
J17	P2-4	OPN	D5-2
J29	P2-5	OPN	C8-2

2. Configure the Port Extender cable in accordance with Table B of the specification and the instructions below.
a. Set printer baud rate (STD=300 baud).

TO / FROM	PRINTER BAUD RATE							
	9600	4800	2400	1800	1200	600	300	110
1-2	HI (1-9)	3-2	2-10	2-3	2-11	2-13	D12/R24	GND (2-8)

b. Ship unit with Port Extender cable installed.

.98 50HZ REFRESH. Modify board per table. J3 selects the number of horizontal scan lines per raster: 260 for 60 HZ or 312 for 50 HZ.

J	TO / FROM	REFRESH	
		60 HZ	50 HZ
J3	H5-4	HI	GND

.27 PARALLEL R/O. Modify board per table. J27-J29 "AND's" signals KDE* and KR* for use as a RDY/BUSY signal for Parallel R/O operation.

J	TO / FROM	TERMINAL TYPE	
		KSR	R/O
J27	H4-4	OPN	D6-9
J28	H4-5	OPN	D6-10
J29	H4-6	OPN	P11-S

.80 PRINTER OUTPUT. 1. Modify board per table. J37 provides -12V to the data connector for the PORT EXTENDER BD. J17, J29 straps CTS and CDI (from PORT EXTENDER BD) as testable discrete inputs to the uP.

J	TO / FROM	PRINTER	
		NO	YES
J37	P2-2	OPN	-12V
J17	P2-4	OPN	D5-2
J29	P2-5	OPN	C8-2

2. Configure the Port Extender cable in accordance with Table B of the specification and the instructions below.
a. Set printer baud rate (STD=300 baud).

TO / FROM	PRINTER BAUD RATE							
	9600	4800	2400	1800	1200	600	300	110
1-2	HI (1-9)	3-2	2-10	2-3	2-11	2-13	D12/R24	GND (2-8)

b. Ship unit with Port Extender cable installed.

.98 50HZ REFRESH. Modify board per table. J3 selects the number of horizontal scan lines per raster: 260 for 60 HZ or 312 for 50 HZ.

J	TO / FROM	REFRESH	
		60 HZ	50 HZ
J3	H5-4	HI	GND

REF 202439 PL-208028

PURPOSE: To provide instructions for installing the above referenced PROM set, and its available options, onto the applicable Ann Arbor terminals boards. The PROM set may be installed on either the 201179B single-board (for D- and E-cases) or the 201165/201167 two-board set (for C-, R-, and D2-cases).

Installation will typically require three steps:

1) Perform the specified hardware mods. Follow the instructions given (or refer to the hardware option sheet attached) for the board being modified.

2) Install the specified program PROM at the specified location (LOC 1 and/or LOC 2, see PROM LOCATION table).

3) Install the specified character PROM at LOC 3. Be sure to use the correct PROM designator (502-xy) shown in the table for the board used. "x" is determined by the board type and is constant for all configurations of a given board. "y" may vary for different configurations.

PROM LOCATION	1165B 1167B	1179B
LOC 1	IC 55	IC A1
LOC 2	IC 56	IC A2
LOC 3	IC 41	IC D2
502-xy	502-1y	502-2y

MODIFICATIONS: Follow the instructions on the following pages for the specific configurationsrequired.

STANDARD
---

1. No hardware mods. necessary.
2. Install 439A PROM (2708) at LOC 1.
3. Install 502-xA PROM (2708) at LOC 3.

.01 CHARS 95&502
---

1. Perform hardware mods:
   .10 CTRLS__N_
   .2³ ACCENT BLINK
2. Install 439A.01 PROM (2708) at LOC 1.
3. Install 502-xA.01 PROM (2708) at LOC 3.

.02 2440 FORMAT
---

1. Perform hardware mods:
   .02 40 CHARS/LINE
2. Install 439A.02 PROM (2708) at LOC 1.
3. Install 502-xA PROM (2708) at LOC 3.

.01.02 OPTION
---

1. Perform hardware mods:
   .02 40 CHARS/LINE
   .10 CTRLS__N_
   .2³ ACCENT BLINK
2. Install 439A.01.02 PROM (2708) at LOC 1.
3. Install 502-xA.01 PROM (2708) at LOC 3.

The following options may be added to any of the prior configurations in the manner specified below.

.21 CR/LF____.

(A) AUTO LF ON CR. Perform hardware mod .21 CR/LF(A).
(H) HOLD AT EOL. Change PROM at LOC 1 per table and add .21(H) to its label.

ADR	.....DATA.....
	NORMAL CR/LF(H)
205	01 03

•22 DEL____•

(S) DELETE SETUP MODE. Perform hardware mod •22 DEL(S).
(K) DELETE KYBD REPEAT. Change PROM at LOC 1 per table and add •22(K) to its label.

ADR	••••DATA•••••	
	NORMAL	DEL(K)
1CB	FA	CE

(C) DELETE CURSOR DISPLAY. Change PROM at LOC 1 per table and add •22(C) to its label.

ADR	••••DATA•••••	
	NORMAL	DEL(C)
08D*	B2	AF
	A2	87

* Read data at 08D. If B2, replace with AF. If A2, replace with 87.

NAME				ANN ARBOR TERMINALS	202439A
DATE				OPTION LIST	SHT 3 OF 3
	ENG	MFG	REL		

PART NUMBER	201163A				
LET	R	REVISION	DATE	DRN	CHK	ENG
A	1	050038 WAS 42 in	4-7-78	GS	RB	JG

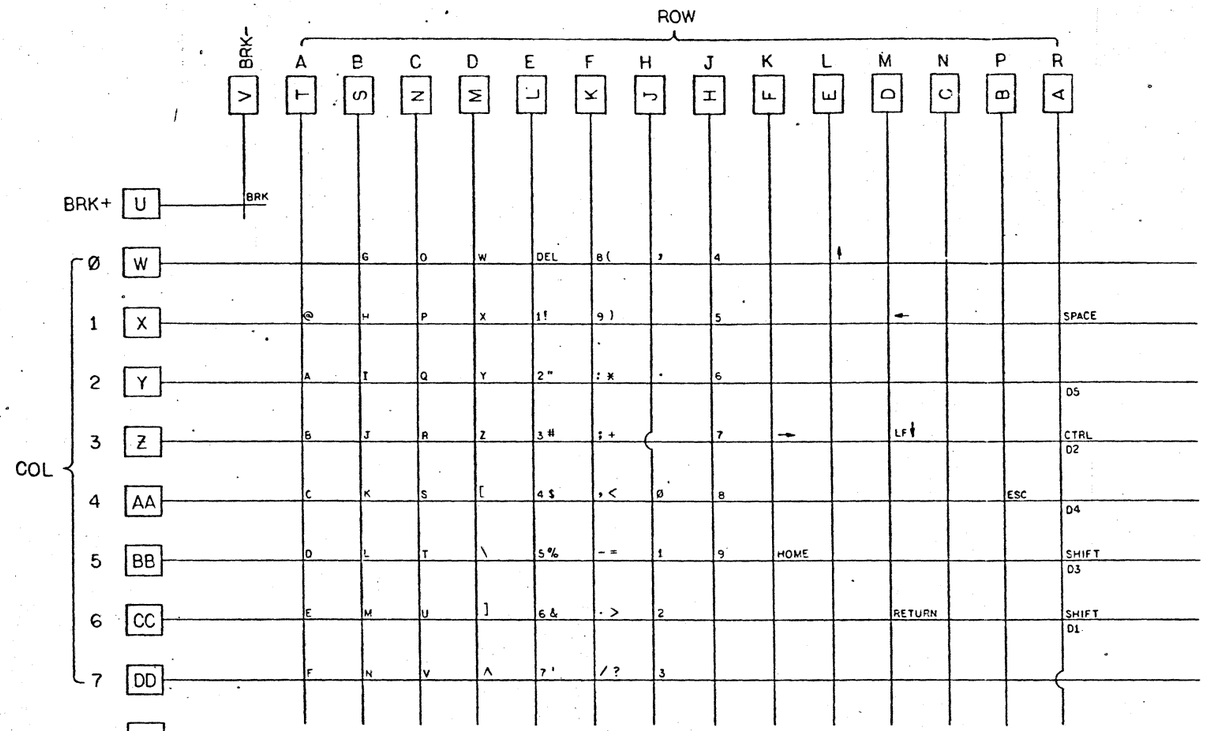

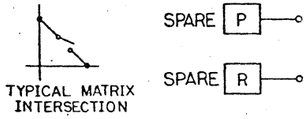

TYPICAL MATRIX INTERSECTION

INTERSECTION W/SERIES DIODE IN4148

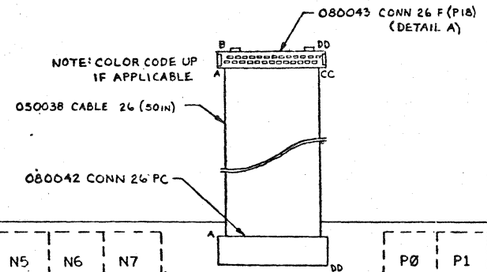

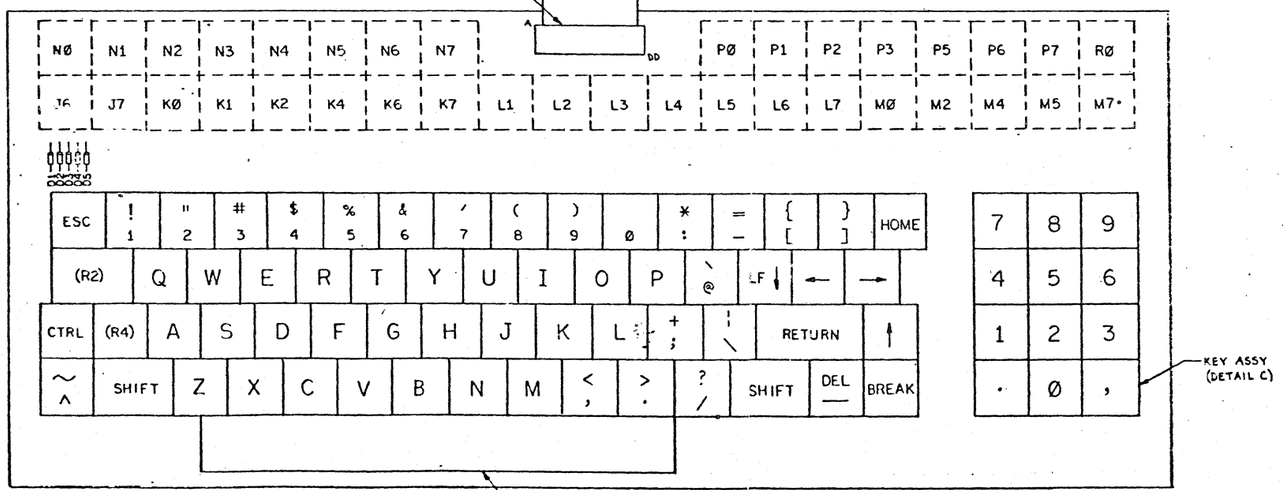

NOTE: DOTTED LINES IDENTIFY UNINSTALLED KEY LOCATIONS. ROW-COL DESIGNATION IDENTIFIES THEIR POSITION IN THE MATRIX

SPACE BAR ASSY (DETAIL B)

KEY ASSY (DETAIL C)

A. CONN HANDLE ASSY

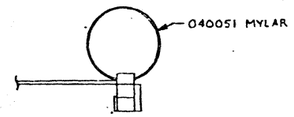

B. SPACE BAR ASSY

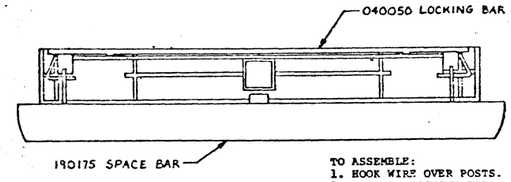

TO ASSEMBLE:
1. HOOK WIRE OVER POSTS.
2. SNAP IN LOCKING BAR.
3. ROTATE SPACE BAR OVER CONTACTS AND PRESS DOWN.

C. KEY ASSY

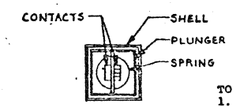

TO ASSEMBLE:
1. PLACE SPRING OVER CONTACTS.
2. INSTALL PLUNGER SO THAT ITS CENTER BAR GOES BETWEEN THE CONTACTS. IT WILL PUSH THE SPRING DOWN AND SNAP INTO PLACE. CHECK THAT THE CONTACTS ARE TOGETHER WHEN THE PLUNGER IS DOWN.
3. PRESS ON KEYCAP.

SERVICE:
1. IF KEY ISN'T WORKING PROPERLY, PULL OFF KEYCAP AND SPRING CONTACTS TOGETHER SLIGHTLY.
2. IF PLUNGER COMES OUT WHEN KEYCAP IS PULLED, REASSEMBLE AS ABOVE, SANDING KEYCAP STEM LIGHTLY BEFORE REINSTALLING. (KEYCAP STEM TO PLUNGER IS A FRICTION FIT; PLUNGER TO ARRAY HAS A MECHANICAL DETENT.)

UNLESS OTHERWISE SPECIFIED: DIMENSIONS ARE IN INCHES AND INCLUDE CHEMICALLY APPLIED OR PLATED FINISHES

TOLERANCES
.X = ±
.XX = ±
.XXX = ±
ANGLES = ±
CHAMFER = ±

REMOVE ALL BURRS AND SHARP EDGES
RADII AND FILLETS .010 TO .020

DO NOT SCALE THIS DRAWING

MATERIAL

FINISH

PROPRIETARY NOTICE: THIS DOCUMENT CONTAINS PROPRIETARY INFORMATION OF ANN ARBOR TERMINALS INCORPORATED AND NEITHER THE DOCUMENT NOR SAID PROPRIETARY INFORMATION SHALL BE PUBLISHED, REPRODUCED, COPIED, DISCLOSED OR USED FOR ANY PURPOSE OTHER THAN CONSIDERATION OF THIS DOCUMENT WITHOUT THE EXPRESS WRITTEN PERMISSION OF A DULY AUTHORIZED REPRESENTATIVE OF SAID COMPANY.

NAME	[illegible]			JR	
DATE	10-24-77			10-26-77	
BY	DRAWN	CHECKED	MECH ENGR	ELEC ENGR	APPROVED

ANN ARBOR TERMINALS, INC.
6107 JACKSON ROAD • ANN ARBOR, MICHIGAN 48103 • 313-761-1524

K400 KYBD

SIZE	PART NUMBER
D	201163A

SCALE | WT | SHEET 1 OF

QTY	PART NO.	DESCRIPTION	SALES PRICE	DISCOUNT CODE	STANDARD DELIVERY
1	205275B 2	KB400E KYBD			
1	205248A	KYBD TOP			
	.10	C/O 201163			
1	205247A	KYBD BOTTOM			
1	201163A	KB400 KYBD			
6	060757	WASHER #8 FLAT			
4	060645	BUMPER			
2	060567	SCREW #8x28 PPH			
2	060565	SCREW #8x20 PPH			
2	060560	SCREW #8x12 PFH			
2in.	040064	RUBBER 1/8			
2in.	040063	RUBBER 1/4			

NAME				ANN ARBOR TERMINALS	205275B 2
DATE				PARTS LIST	SHT 1 OF 1
	ENG	MFG	REL		

QTY	PART NO.	DESCRIPTION	SALES PRICE	DISCOUNT BASE	STANDARD DELIVERY
1	201163A2	KB400 KYBD			
1	201162A	PC CARD			
1	190175	KEYTOP SPACE BAR			
1	190174	KEYTOP LF↓			
1	190173	KEYTOP RETURN			
2	190171	KEYTOP SHIFT			
1	190170	KEYTOP 1½-BLANK			
1	190168	KEYTOP HOME			
1	190167	KEYTOP BREAK			
1	190166	KEYTOP CTRL			
1	190165	KEYTOP ESC			
1	190164	KEYTOP ___ DEL			
1	190163	KEYTOP / ?			
1	190162	KEYTOP , <			
1	190161	KEYTOP . >			
1	190160	KEYTOP \ ¦			
1	190159	KEYTOP - =			
1	190158	KEYTOP @ `			
1	190157	KEYTOP ; +			
1	190156	KEYTOP ^ ~			
1	190155	KEYTOP : *			
1	190154	KEYTOP] ¾			
1	190153	KEYTOP [¿			
1	190152	KEYTOP 9)			
1	190151	KEYTOP 8 (			
1	190150	KEYTOP 7 '			
1	190149	KEYTOP 6 &			
1	190148	KEYTOP 5 %			
1	190147	KEYTOP 4 $			
1	190146	KEYTOP 3 #			
1	190145	KEYTOP 2 "			
1	190144	KEYTOP 1 !			
1	190143	KEYTOP Ø (large)			
1	190142	KEYTOP Ø (small)			
1	190141	KEYTOP ←			
1	190140	KEYTOP →			
1	190138	KEYTOP ↑			
1	190137	KEYTOP ,			
1	190136	KEYTOP .			
1	190135	KEYTOP 9			
1	190134	KEYTOP 8			
1	190133	KEYTOP 7			
1	190132	KEYTOP 6			
1	190131	KEYTOP 5			
1	190130	KEYTOP 4			
1	190129	KEYTOP 3			
1	190128	KEYTOP 2			
1	190127	KEYTOP 1			

NAME	JR	[illegible]	[illegible]	ANN ARBOR TERMINALS	201163A
DATE	4-11-80	14-11-80	4-11-80	PARTS LIST	SHT 1 OF 2
	ENG	MFG	REL		

QTY	PART NO.	DESCRIPTION
1	190126	KEYTOP Z
1	190125	KEYTOP Y
1	190124	KEYTOP X
1	190123	KEYTOP W
1	190122	KEYTOP V
1	190121	KEYTOP U
1	190120	KEYTOP T
1	190119	KEYTOP S
1	190118	KEYTOP R
1	190117	KEYTOP Q
1	190116	KEYTOP P
1	190115	KEYTOP O
1	190114	KEYTOP N
1	190113	KEYTOP M
1	190112	KEYTOP L
1	190111	KEYTOP K
1	190110	KEYTOP J
1	190109	KEYTOP I
1	190108	KEYTOP H
1	190107	KEYTOP G
1	190106	KEYTOP F
1	190105	KEYTOP E
1	190104	KEYTOP D
1	190103	KEYTOP C
1	190102	KEYTOP B
1	190101	KEYTOP A
1	190100	KEYTOP 1-BLANK
1	190093	ARRAY 3x4
1	190095	ARRAY 63-KEY
4	160031	DIODE 1N270
1	080043	CONN 26F (P18)
1	080042	CONN 26PC
2	060606	NUT 632
3	060152	SCREW 440x4STPH
2	060206	SCREW 632x8 PH
50in	050038	CABLE 26
1	040051	MYLAR LOOP
1	040050	SPACE BAR LOCK

NAME	JK	[illegible]	[illegible]
DATE	4-11-82	[illegible]	4-11-82
	ENG	MFG	REL

ANN ARBOR TERMINALS
PARTS LIST

201163A
SHT 2 OF 2

QTY	PART NO.	DESCRIPTION	SALES PRICE	DISCOUNT BASE	STANDARD DELIVERY
1	205274B .01	RS232 CABLE FEMALE DT	$10	$10	
1	150082	RSTR 6.8K (R1)			
2	150056	RSTR 560 (R2,R3)			
1	080134	CONN 14F (P2)			
2	080088	KEY			
1	080052	HOOD			
1	080051	CLAMP			
1	080048	SCREW KIT			
4	080032	PIN			
1	080028	CONN 25F			
5	080011	PIN			
6ft	050186	CABLE 6			
A/R	050011	3/16 SHRINK TUBING			

PURPOSE: Configures terminal for use as RS232-standard Data Terminal equipment in respect to signal wiring but provides a non-standard connector (female instead of male) at the cable end.

NOTES: 1. Crimp BRN and BLU wires together into P2 pin 3.
2. Insulate all resistors with shrink tubing.

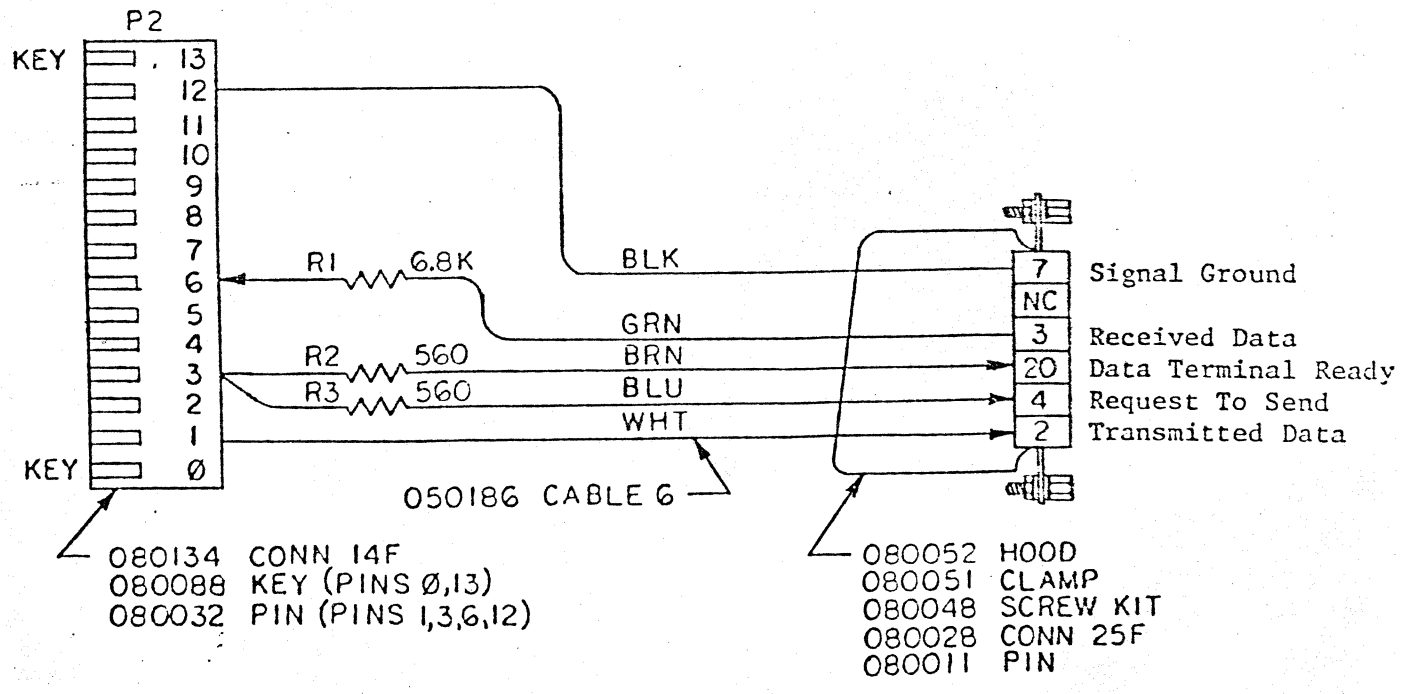

NAME	[illegible]	[illegible]	[illegible]	ANN ARBOR TERMINALS	205274B.01
DATE	6-8-79	1-18-80	1-18-80	PARTS LIST	SHT 1 OF 1
	ENG	MFG	REL		

PART NUMBER		201179B				
LET	R	REVISION	DATE	DR	CHK	A
B	1	SEE STOCK CORRECTION	6-26-79	GS	CP	
B	1	ASSY DRAWING CORRECTION	10-12-79	GS		

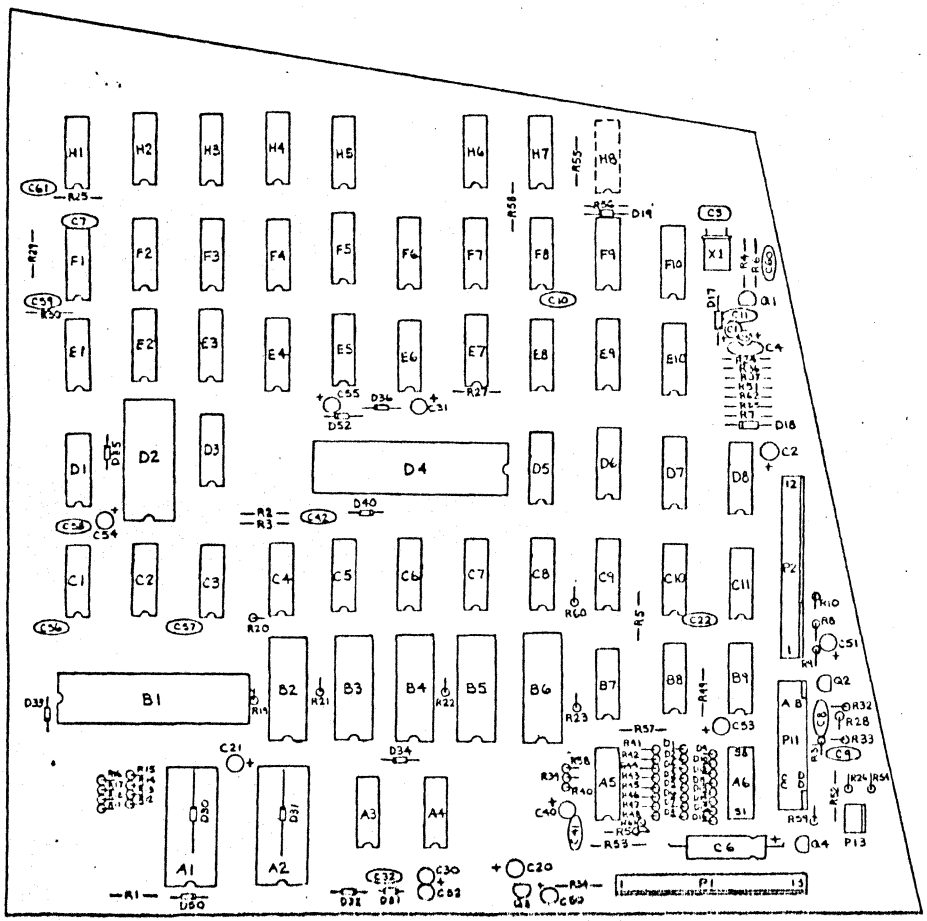

P11

A	B
C	D
E	F
H	J
K	L
M	N
P	R
S	T
U	V
W	X
Y	Z
AA	BB
CC	DD

NOTE: DIODES D1-D16 ARE DRAWN STRIPED END UP.

UNLESS OTHERWISE SPECIFIED: DIMENSIONS ARE IN INCHES AND INCLUDE CHEMICALLY APPLIED OR PLATED FINISHES

TOLERANCES
.X = ±
.XX = ±
.XXX = ±
ANGLES = ±
CHAMFER = ±

REMOVE ALL BURRS AND SHARP EDGES
RADII AND FILLETS .010 TO .020

DO NOT SCALE THIS DRAWING

MATERIAL

FINISH

PROPRIETARY NOTICE: THIS DOCUMENT CONTAINS PROPRIETARY INFORMATION OF ANN ARBOR TERMINALS INCORPORATED AND NEITHER THE DOCUMENT NOR SAID PROPRIETARY INFORMATION SHALL BE PUBLISHED, REPRODUCED, COPIED, DISCLOSED OR USED FOR ANY PURPOSE OTHER THAN CONSIDERATION OF THIS DOCUMENT WITHOUT THE EXPRESS WRITTEN PERMISSION OF A DULY AUTHORIZED REPRESENTATIVE OF SAID COMPANY.

	NAME	DRAWN	CHECKED	MECH ENGR	ELEC ENGR	APPROVED
DATE	2-7-79				2-7-79	2-7-79
BY						

ANN ARBOR TERMINALS INC
8107 JACKSON ROAD • ANN ARBOR, MICHIGAN 48103 • 313 769 0928

TERMINAL BD

SIZE	PART NUMBER
C	201179B

PART NUMBER	2011798		
LET	R	REVISION	DATE	ORN	CHK
B	1	SEE STOCK CORRECTION	4-26-79	G.S.	

D7	74LS32	4	—				
D6	74LS74	2	—				
D5	74LS258	1	—				
D4	8080A	1	—				
D3	74LS174	1	—	H8	SPARE		
D2	2708	1	—	H7	74LS161	1	—
D1	1007	1	—	H6	74LS161	1	—
C11	74LS02	4	2	H5	74LS161	1	—
C10	75188	4	3	H4	74LS08	4	2
C9	74LS258	1	—	H3	74LS32	4	—
C8	74LS258	1	—	H2	74LS00	4	—
C7	74193	1	—	H1	74LS175	1	—
C6	74193	1	—	F10	74LS04	6	1
C5	74193	1	—	F9	74LS32	4	—
C4	7406	6	1	F8	74LS02	4	1
C3	74LS155	1	—	F7	74LS04	6	—
C2	1007	1	—	F6	74LS10	3	—
C1	1007	1	—	F5	74LS161	1	—
B9	7445	1	—	F4	74LS160	1	—
B8	7445	1	—	F3	74LS74	2	—
B7	7406	4	—	F2	74LS10	3	—
B6	TMS4060	1	—	F1	74LS20	4	—
B5	TMS4060	1	—	E10	74LS08	4	—
B4	TMS4060	1	—	E9	74LS00	4	—
B3	TMS4060	1	—	E8	74LS86	4	—
B2	TMS4060	1	—	E7	74LS10	3	—
B1	TMS6011	1	—	E6	74LS74	2	1
A6	DIP SWITCH		—	E5	74LS161	1	—
A5	4512	1	—	E4	74LS161	1	—
A4	74LS173	1	—	E3	74LS151	1	—
A3	74LS173	1	—	E2	74LS166	1	—
A2	2708	1	—	E1	74LS175	1	—
A1	2708	1	—	D8	74LS123	2	—
IC	TYPE	No OF CKTS	SPARE CKTS	IC	TYPE	No OF CKTS	SPARE CKTS

PROPRIETARY NOTICE: THIS DOCUMENT CONTAINS PROPRIETARY INFORMATION OF ANN ARBOR TERMINALS INCORPORATED AND NEITHER THE DOCUMENT NOR SAID PROPRIETARY INFORMATION SHALL BE PUBLISHED, REPRODUCED, COPIED, DISCLOSED OR USED FOR ANY PURPOSE OTHER THAN CONSIDERATION OF THIS DOCUMENT WITHOUT THE EXPRESS WRITTEN PERMISSION OF A DULY AUTHORIZED REPRESENTATIVE OF SAID COMPANY.

UNLESS OTHERWISE SPECIFIED: DIMENSIONS ARE IN INCHES AND INCLUDE CHEMICALLY APPLIED OR PLATED FINISHES

TOLERANCES
.X = ±
.XX = ±
.XXX = ±
ANGLES = ±
CHAMFER = ±

REMOVE ALL BURRS AND SHARP EDGES
RADII AND FILLETS .010 TO .090

DO NOT SCALE THIS DRAWING

MATERIAL

FINISH

	NAME	G.S.			DF	
DATE	2-7-79				2-7-79	
BY	DRAWN	CHECKED	MECH ENGR	ELEC ENGR	APPROVED	

ANN ARBOR
TERMINALS INC
8107 JACKSON ROAD • ANN ARBOR, MICHIGAN 48103 • 313-769-8010

TERMINAL BD

SIZE	PART NUMBER	
D	2011798	

SCALE — WT — SHEET 2 OF 3

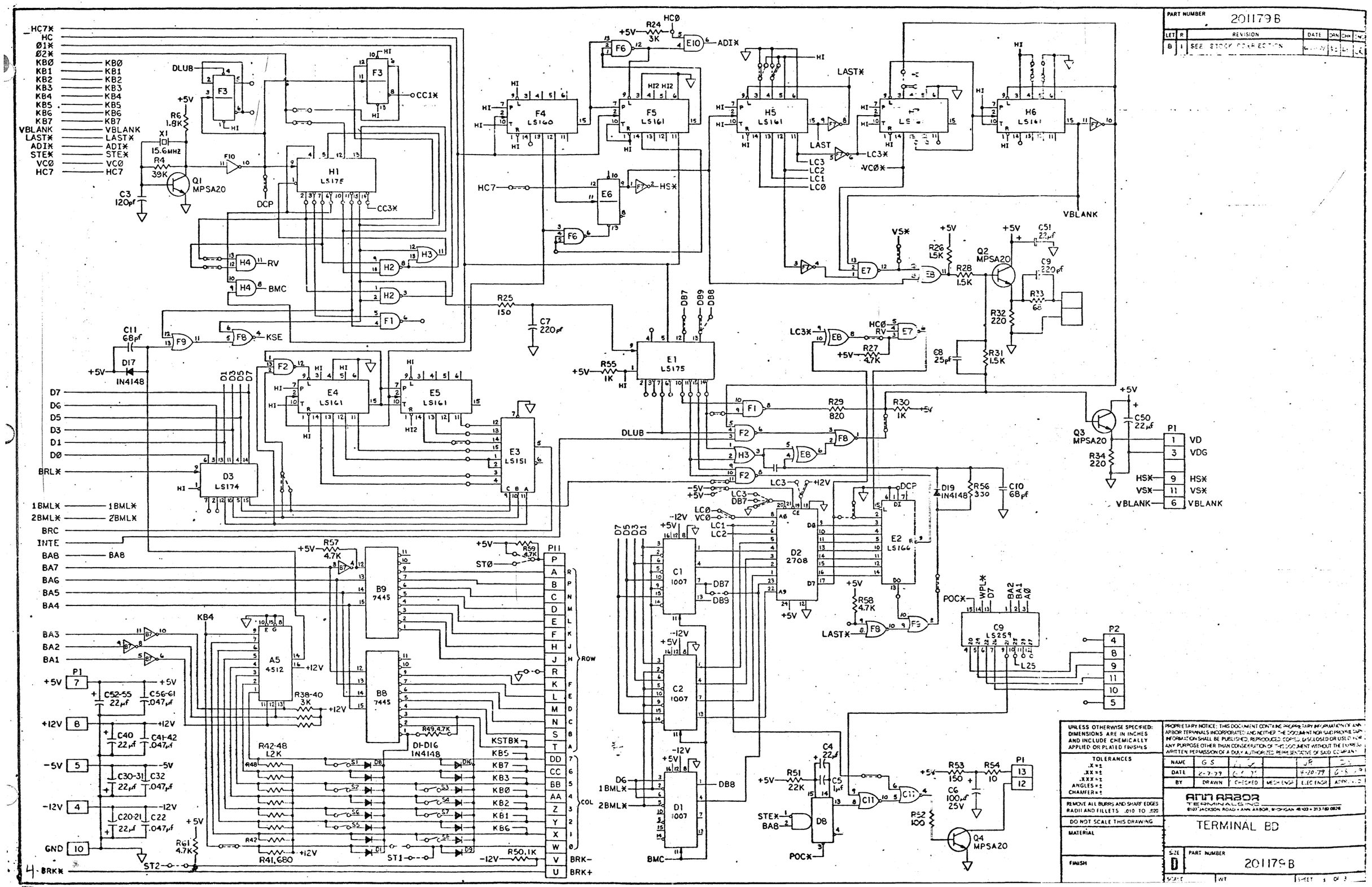

UNLESS OTHERWISE SPECIFIED: DIMENSIONS ARE IN INCHES AND INCLUDE CHEMICALLY APPLIED OR PLATED FINISHES

TOLERANCES
.X = ±
.XX = ±
.XXX = ±
ANGLES = ±
CHAMFER = ±

REMOVE ALL BURRS AND SHARP EDGES
RADII AND FILLETS .010 TO .020

DO NOT SCALE THIS DRAWING

MATERIAL

FINISH

PROPRIETARY NOTICE: THIS DOCUMENT CONTAINS PROPRIETARY INFORMATION OF ANN ARBOR TERMINALS INCORPORATED AND NEITHER THE DOCUMENT NOR SAID PROPRIETARY INFORMATION SHALL BE PUBLISHED, REPRODUCED, COPIED, DISCLOSED OR USED FOR ANY PURPOSE OTHER THAN CONSIDERATION OF THIS DOCUMENT WITHOUT THE EXPRESS WRITTEN PERMISSION OF A DULY AUTHORIZED REPRESENTATIVE OF SAID COMPANY

NAME	G S			JR	
DATE	2-7-79			4-20-79	
BY	DRAWN	CHECKED	MECH ENGR	ELEC ENGR	APPROVED

ANN ARBOR TERMINALS INC
6107 JACKSON ROAD • ANN ARBOR, MICHIGAN 48103 • 313 760 0826

TERMINAL BD

SIZE D PART NUMBER 201179B

SCALE WT SHEET 1 OF 3