DEC OSF/1

digital

Installation Guide

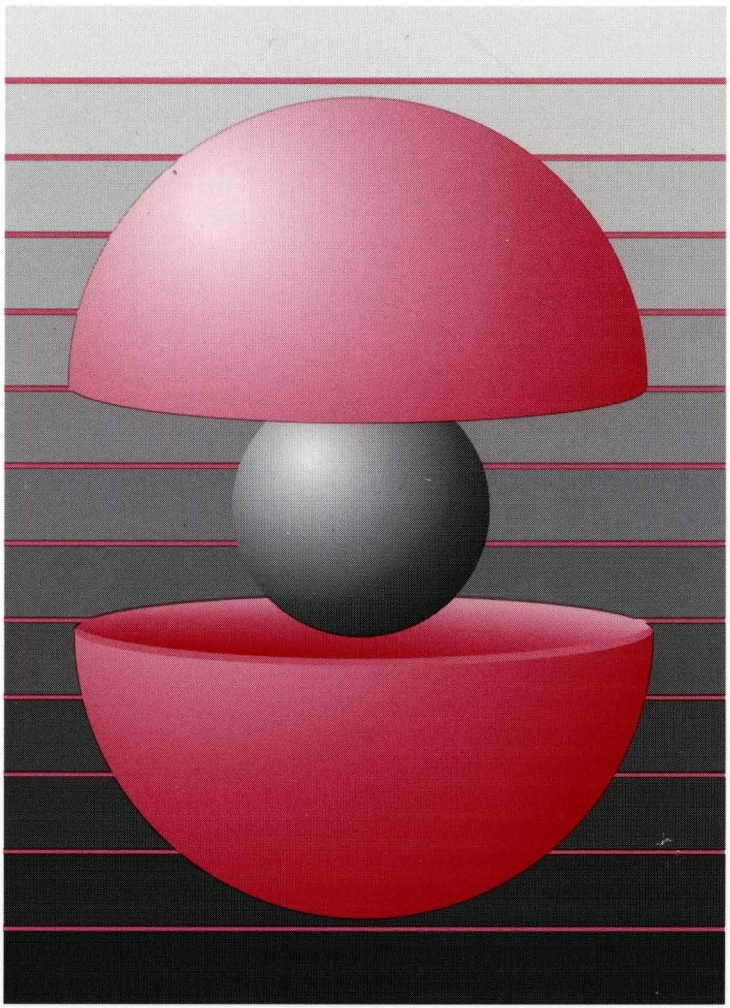

Part Number: AA-PS2DD-TE

DEC OSF/1

Installation Guide

Order Number: AA-PS2DD-TE

August 1994

Product Version: DEC OSF/1 Version 3.0

This guide describes the update installation process and the basic and advanced installation procedures for a full installation. It also describes the standalone environment for the DEC OSF/1 operating system on all supported processors.

Digital Equipment Corporation
Maynard, Massachusetts

Restricted Rights: Use, duplication, or disclosure by the U.S. Government is subject to restrictions as set forth in subparagraph (c) (1) (ii).

Digital Equipment Corporation makes no representations that the use of its products in the manner described in this publication will not infringe on existing or future patent rights, nor do the descriptions contained in this publication imply the granting of licenses to make, use, or sell equipment or software in accordance with the description.

Possession, use, or copying of the software described in this publication is authorized only pursuant to a valid written license from Digital or an authorized sublicensor.

© Digital Equipment Corporation August 1994
All rights reserved.

The following are trademarks of Digital Equipment Corporation:

ALL–IN–1, Alpha AXP, AlphaGeneration, AXP, Bookreader, CDA, DDIS, DEC, DEC Ada, DEC C++, DEC Fortran, DEC FUSE, DECladebug, DECnet, DECstation, DECsystem, DECterm, DECUS, DECwindows, DTIF, MASSBUS, MicroVAX, OpenVMS, POLYCENTER, Q–bus, TURBOchannel, ULTRIX, ULTRIX Mail Connection, ULTRIX Worksystem Software, UNIBUS, VAX, VAXstation, VMS, XUI, and the DIGITAL logo.

ONC is a trademark of Sun Microsystems, Inc. Open Software Foundation, OSF, OSF/1, OSF/Motif, and Motif are trademarks of the Open Software Foundation, Inc. Adobe, PostScript, and Display PostScript are registered trademarks of Adobe Systems, Inc. UNIX is a registered trademark in the United States and other countries licensed exclusively through X/Open Company Ltd.

All other trademarks and registered trademarks are the property of their respective holders.

Contents

About This Guide

Audience xv

Organization xv

Related Documentation xvii

Reader's Comments xviii

Conventions xviii

1 Preparing for the Installation

1.1 Checking the Hardware Needed for Installation 1–2

1.2 Checking the Software Distribution Kit 1–3

1.3 Factory Installed Software (FIS) 1–3

1.4 Determining the Type of Installation to Perform 1–4

1.4.1 Choosing the Advanced Installation over the Basic Installation 1–4

1.5 Update Installation Program (installupdate) 1–5

1.6 Basic Installation 1–6

1.7 Advanced Installation 1–7

1.8 System Management Option 1–9

1.9 Software Licensing 1–9

2 Performing an Update Installation

2.1 What is an Update Installation? 2–1

2.1.1 Files Affected By the Update Installation 2–1

2.2 Steps In an Update Installation 2–2

2.3 Checking the Status of your System 2–4

2.3.1 System Backup 2–4
2.3.2 Device Names 2–4
2.3.3 Disk Space 2–5
2.3.4 Network Status 2–5
2.3.5 Loading Additional Subsets 2–6
2.3.6 Changes to Logical Storage Manager Subset in Version 3.0 . 2–6
2.3.7 OSF-BASE Product Authorization Key (PAK) Required for Version 3.0 2–6

2.4 Choosing Update Installation Media 2–7

2.4.1 Running installupdate from CD–ROM Media 2–7
2.4.2 Running installupdate from a RIS Server 2–8

2.5 Responding to the Update Installation Dialog 2–9

2.5.1 Verifying the System Backup 2–10
2.5.2 Checking for OSF-BASE PAK 2–10
2.5.3 Layered Products 2–11
2.5.4 Checking the System Status 2–12
2.5.5 File Type Conflicts 2–13
2.5.6 Unprotected Customized File Detection 2–13
2.5.7 File Size Checks 2–15
2.5.8 Loading Subsets and Merging 2–16

2.5.8.1 Recovering from Failures During Loading of Subsets . 2–17

2.5.9 Configuring Subsets and Merging 2–18
2.5.10 Building the Kernel 2–18

2.5.10.1 Recovering from Failures During Kernel Build 2–19

2.6 Device Special File Name Changes 2–20

2.7 Postinstallation Tasks 2–20

2.7.1 Installation Log Files 2–20
2.7.2 Editing the /etc/bootptab File 2–21
2.7.3 Manually Merging Customizations 2–21

2.8 Update Administration Utility 2–22

2.8.1 Update Administration Utility Main Menu 2–22
2.8.2 File Administration Menu Options 2–24
2.8.3 Save Files Option 2–24
2.8.4 Delete Files Option 2–25
2.8.5 View List of Files Option 2–26
2.8.6 Messages and Archive Options 2–26

3 Planning the Disk Space

3.1 Planning Disk Layout 3–2

3.2 Planning the Swap Space 3–4

3.3 Planning the Crash Dump Space 3–5

3.4 Planning the var Area 3–6

3.4.1 Error Logger and syslog Files 3–7
3.4.2 System Accounting 3–7
3.4.3 Size of the /var/adm/ris Directory 3–7
3.4.4 Size of the /var/adm/dms Directory 3–8
3.4.5 Completing the var Worksheet 3–8

3.5 Planning the /usr File System 3–9

3.5.1 Software Subsets Within the /usr File System 3–9
3.5.2 User Space Required 3–10
3.5.3 Size of the var Area 3–10
3.5.4 Completing the /usr Worksheet 3–10

3.6 Determining the Disk Partition Layout 3–11

4 Booting the System

4.1 Preparing the Hardware for the Installation 4–1

4.2 DEC 2000 Series Processor 4–2

4.2.1 Firmware Requirements 4–2
4.2.2 EISA Configuration 4–3
4.2.3 Console Flag Settings 4–3
4.2.4 Booting from the CD-ROM Optical Disc Kit 4–4
4.2.5 Booting from the Network 4–5
4.2.5.1 Booting from a DEC OSF/1 Server 4–5
4.2.5.2 Booting from an ULTRIX Server 4–5

4.3 DEC 2100 Series Processor 4–6

4.3.1 Running the EISA Configuration Utility (ECU) Before Installation 4–6
4.3.2 Before Starting the Boot Procedure on a DEC 2100 4–6
4.3.3 Booting from the CD-ROM Optical Disc Kit 4–6
4.3.4 Booting from the Network 4–8
4.3.4.1 Booting from a DEC OSF/1 Server 4–8
4.3.4.2 Booting from an ULTRIX Server 4–9

4.3.5 Prestoserve Option 4–9
4.3.5.1 Firmware Requirements 4–9
4.3.5.2 The prcache Command 4–9

4.4 DEC 3000 Series Processor 4–10

4.4.1 Booting from the CD-ROM Optical Disc Kit 4–10
4.4.2 Booting from the Network 4–11
4.4.2.1 Booting from a DEC OSF/1 Server 4–11
4.4.2.2 Booting from an ULTRIX Server 4–12

4.4.3 Booting from the SCSI TURBOchannel Option Card 4–12
4.4.4 Booting from an FDDI Network Interface 4–13

4.5 DEC 4000 Series Processor 4–14

4.5.1 Booting from the CD-ROM Optical Disc Kit 4–14
4.5.2 Booting from the Network 4–15
4.5.2.1 Booting from a DEC OSF/1 Server 4–16
4.5.2.2 Booting from an ULTRIX Server 4–16

4.5.3 Prestoserve Option 4–17
4.5.3.1 Firmware Requirements 4–17
4.5.3.2 The prcache Command 4–17

4.6 DEC 7000 and DEC 10000 Series Processors 4–17
4.6.1 Booting from the CD-ROM Optical Disc Kit 4–18
4.6.2 Booting from the Network 4–19

5 Performing the Full Installation

5.1 Choosing the Type of Installation 5–1
5.2 Selecting the System Disk for the root Partition 5–2
5.2.1 Disks Used on ULTRIX Systems 5–2
5.2.2 Disk Labels on Existing System Disks 5–2
5.2.2.1 Preserving Data on an Existing System Disk 5–3
5.2.3 Disk Size Restrictions 5–4
5.2.4 System Disk Table 5–5
5.2.5 Selecting File System Type for root 5–6
5.2.6 ULTRIX Partition Tables 5–6
5.2.7 Selecting Disk Partitions 5–7
5.3 Rebooting the System 5–8
5.4 Allocating File Systems 5–9
5.4.1 Allocating the /usr File System 5–10
5.4.2 Allocating the swap Space 5–11
5.4.3 Allocating the var Area 5–13
5.5 Installing Subsets 5–15
5.5.1 Subsets for the Basic Installation 5–15
5.5.2 Subsets for the Advanced Installation 5–17
5.6 Files on Your System After the Installation 5–22
5.6.1 Installation Log Files 5–22
5.7 After the Software Subset Installation 5–22

6 Configuring and Setting Up the System

6.1 Configuring the System 6–1

6.2 Entering System Information 6–3

6.2.1 Entering the System Name 6–3
6.2.2 Entering the Superuser (Root) Password 6–4
6.2.3 Entering the Time Zone 6–5
6.2.4 Entering the Date and Time 6–6

6.3 Building the Kernel 6–7

6.4 Logging in to the System 6–11

6.5 The Setup Welcome Message 6–11

6.6 Using the License Management Facility 6–17

6.7 Displaying the Documentation 6–20

6.7.1 Accessing the Documentation from a Workstation 6–20
6.7.2 Accessing the Documentation from a Server 6–21

6.8 Documentation on the DEC OSF/1 CD-ROM 6–23

6.9 Setting Up the System 6–26

6.9.1 Using the Setup Programs 6–26
6.9.2 Adding a User Account 6–27
6.9.3 Setting Up Printers 6–29
6.9.4 Running the SVID2 Habitat 6–29
6.9.5 Verifying the Installation 6–29
6.9.6 Setting up Security 6–30
6.9.7 Setting Up the Logical Storage Manager (LSM) 6–30

6.10 Enabling Realtime Preemption 6–30

7 Working in the Standalone Environment

7.1 What is the Standalone Environment? 7–1

7.2 Invoking the Standalone Environment 7–2

7.3 Standalone Environment Capabilities 7–4

7.4 Accessing Devices in the Standalone Environment 7–5
7.5 Mounting File Systems in the Standalone Environment 7–5
7.6 Restoring File Systems in the Standalone Environment 7–6
7.7 Changing the Size of the Disk Partition 7–8
7.8 Using a Disk That Contains ULTRIX Partition Information 7–11

8 Installing Software Subsets After the Installation

8.1 Using the setld Command 8–1
8.2 Displaying Subset Inventories 8–2
8.3 Installing a Software Subset 8–3

A Loading and Inserting a DEC OSF/1 Compact Disc

A.1 Loading a Disc into a Caddy A–1
A.2 Inserting and Removing a Disc from a Drive A–3

B Software Subsets

B.1 Mandatory Subsets B–1
B.2 Optional Subsets B–4
B.2.1 General Applications Subsets B–5
B.2.2 Kernel Build Environment Subsets B–7
B.2.3 Mail Applications Subsets B–8
B.2.4 Network-Server/Communications Subsets B–9
B.2.5 Printing Environment Subsets B–10
B.2.6 Reference Pages Subsets B–10
B.2.7 Software Development Subsets B–11
B.2.8 Supplemental Documentation Subset B–13
B.2.9 System Administration Subsets B–13
B.2.10 Text-Processing Subsets B–15
B.2.11 Windowing Environment Subsets B–15
B.2.12 Windows Applications Subsets B–16

B.2.13 Worldwide Language Support Subsets B–17

C Additional Subsets

C.1 Atom Performance Analysis Tool (ATMBASE) C–2
C.2 Development Enhancements (Compiler) for DEC OSF/1 AXP Systems (CMPDEVENH) C–3
C.3 DEC Ada Run-Time Library Support for DEC OSF/1 AXP Systems (ADALIB) C–4
C.4 DECLadebug for DEC OSF/1 AXP Systems (LDBBASE and LDBSRV) C–4
C.5 DEC C++ RTL for DEC OSF/1 AXP Systems (CXXSHRDA) C–5
C.6 DEC Cobol Run-Time Support Library for DEC OSF/1 AXP Systems (DCARTL) C–6
C.7 DEC Fortran for DEC OSF/1 AXP Run-Time Support (DFARTL) . C–7
C.8 DEC Pascal for DEC OSF/1 AXP Run-Time Support (DPORTL) ... C–8
C.9 GNU awk Source (FSFGAWKSRC) C–9
C.10 GNU Emacs Source (FSFEMACSSRC) C–9
C.11 GNU Revision Control System Source (FSFRCSSRC) C–10
C.12 Sort Library (SORLIB) C–10
C.13 Worldwide Support C–11
C.13.1 DEC OSF/1 Worldwide Support Version 3.0 ..... C–12
C.13.2 DEC OSF/1 Czech Support Version 3.0 ..... C–13
C.13.3 DEC OSF/1 German Support Version 3.0 ..... C–13
C.13.4 DEC OSF/1 Greek Support Version 3.0 ..... C–14
C.13.5 DEC OSF/1 Spanish Support Version 3.0 ..... C–14
C.13.6 DEC OSF/1 French Support Version 3.0 ..... C–14
C.13.7 DEC OSF/1 Hungarian Support Version 3.0 ..... C–15
C.13.8 DEC OSF/1 Italian Support Version 3.0 ..... C–15
C.13.9 DEC OSF/1 Hebrew Support Version 3.0 ..... C–15
C.13.10 DEC OSF/1 Japanese Support Version 3.0 ..... C–16
C.13.11 DEC OSF/1 Korean Support Version 3.0 ..... C–17
C.13.12 DEC OSF/1 Polish Support Version 3.0 ..... C–17

C.13.13 DEC OSF/1 Russian Support Version 3.0 ..... C–17
C.13.14 DEC OSF/1 Slovak Support Version 3.0 ..... C–18
C.13.15 DEC OSF/1 Swedish Support Version 3.0 ..... C–18
C.13.16 DEC OSF/1 Thai Support Version 3.0 ..... C–18
C.13.17 DEC OSF/1 Turkish Support Version 3.0 ..... C–19
C.13.18 DEC OSF/1 Chinese Support Version 3.0 ..... C–19

C.14 Additional International Support C–21

D Disk Partition Information

D.1 DSA Disk Drives D–1
D.2 SCSI Disk Drives D–6

E Installation Error Messages

F Basic Installation Log

G Advanced Installation Log

H System Configuration Log File

I Update Installation Log

J Sample File Logs from Update Installations

J.1 List of Protected .new.. Files J–1
J.2 Sample Customized File List J–4
J.3 Sample Obsolete File List J–4

Index

Examples

6-1: Sample lmfsetup Session 6–19

Figures

7-1: Partial Layout of the Standalone File System 7–3
A-1: Pressing Tabs and Lifting Lid of a CD-ROM Caddy A–2
A-2: Placing A Disc in a CD-ROM Caddy A–2
A-3: Inserting a CD-ROM into a Disc Drive A–3

Tables

3-1: Supported System Disks 3–2
3-2: Disk Configuration Worksheet 3–3
3-3: var Worksheet 3–8
3-4: /usr Worksheet 3–11
3-5: File System Worksheet 3–12
4-1: Location of Processor-Specific Boot Instructions 4–2
6-1: Time Zone Menu Definitions 6–5
6-2: Bookreader Bookshelves and Titles 6–23
7-1: Contents of the /kit/isl Directory 7–4
B-1: Description of the Mandatory Subsets B–2
B-2: Description of the General Applications Subsets B–5
B-3: Description of the Kernel Build Environment Subsets B–7
B-4: Description of the Mail Applications Subsets B–8
B-5: Description of the Network-Server/Communications Subsets B–9
B-6: Description of the Printing Environment Subsets B–10
B-7: Description of the Reference Pages Subsets B–10

B-8: Description of the Software Development Subsets B–11
B-9: Description of the Supplemental Documentation Subset B–13
B-10: Description of the System Administration Subsets B–13
B-11: Description of the Text Processing Subsets B–15
B-12: Description of the Windowing Environment Subset B–15
B-13: Description of the Windows Applications Subsets B–16
B-14: Description of the Language Support Subsets B–17
C-1: Additional Software Subsets C–1

About This Guide

This guide describes the procedures for installing the DEC OSF/1 operating system on all supported processors. It describes how to prepare your system for installation, how to boot the processor from the distribution media, and how to perform the installation procedure. This guide also explains how to work in the standalone environement.

For DEC OSF/1 Version 3.0 you can use the update installation procedure to update from DEC OSF/1 Version 2.0 (and subsequent releases). The `installupdate` procedure upgrades your system and preserves many of your system customizations.

Audience

This book is intended for anyone installing the DEC OSF/1 operating system software. Before proceeding with an installation you must:

- Read the documentation supplied with your processor
- Read the current version of the DEC OSF/1 *Release Notes*
- Understand how to load and unload the installation media and know which disks are needed during the installation
- Know the names and unit numbers of your disk devices
- Have a basic understanding of the file system and commands

If your system comes with Factory-Installed Software (FIS), the subsets necessary to get your system up and running are installed at the factory. Follow the instructions in the FIS documentation delivered with your system, and then refer to Chapter 6 of this guide for instructions on how to configure and set up your system.

Organization

This guide has eight chapters, ten appendixes, and an index:

Chapter 1	Describes the different installation options and explains how to invoke the system administration option. This chapter also describes the tasks you must complete before beginning an installation.

Chapter 2	Explains how to perform an update installation. An update installation preserves many customizations made to your current operating system.
Chapter 3	Describes the tasks you should complete before beginning an advanced installation. This chapter contains a set of worksheets to help you plan your file system.
Chapter 4	Describes how to boot each processor that the DEC OSF/1 software supports.
Chapter 5	Describes how to complete the full installation.
Chapter 6	Describes how to configure and set up the system after installing the DEC OSF/1 operating system software.
Chapter 7	Describes a standalone environment that supports the initial phases of an installation, which includes selecting the distribution and system devices, and restoring the root file system image to the target system disk. This chapter also describes how to use the `disklabel` command to change disk partition layouts.
Chapter 8	Provides information on using the `setld` command to install software subsets at any time after the installation.
Appendix A	Describes how to load and remove a DEC OSF/1 CD-ROM.
Appendix B	Provides a description of each supported software subset.
Appendix C	Provides a description for each of the additional subsets that are shipped on the DEC OSF/1 CD-ROM.
Appendix D	Provides disk partition information for the supported disk drives.
Appendix E	Explains some of the error messages that you might encounter during an installation.
Appendix F	Provides a sample log file for the basic installation procedure.
Appendix G	Provides a sample log file for the advanced installation procedure.
Appendix H	Provides a sample configuration log file.
Appendix I	Provides a sample log file for the update installation procedure.
Appendix J	Provides sample logs for the files saved or modified by the update installation procedure.

Related Documentation

The printed version of the DEC OSF/1 documentation set is color coded to help specific audiences quickly find the books that meet their needs. (You can order the printed documentation from Digital.) This color coding is reinforced with the use of an icon on the spines of books. The following list describes this convention:

Audience	Icon	Color Code
General Users	G	Teal
System Administrators	S	Red
Network Administrators	N	Yellow
Programmers	P	Blue
Reference Page Users	R	Black

Some books in the documentation set help meet the needs of several audiences. For example, the information in some system books is also used by programmers. Keep this in mind when searching for information on specific topics.

The *Documentation Overview* provides information on all of the books in the DEC OSF/1 documentation set.

Read the related documentation in the following order:

1. The documentation for your hardware shows how to set up the processor and its additional devices, and supplies valuable troubleshooting guidelines.
2. Before beginning the installation, read the current version of the DEC OSF/1 *Release Notes*.
3. Refer to *Sharing Software on a Local Area Network* for information about Remote Installation Services (RIS) and Dataless Management Services (DMS). RIS allows you to install software products over the network. DMS gives you the ability to set up a dataless management environment on a server system.
4. Refer to *System Administration* for information on administering and maintaining your system. This guide also contains information about the POLYCENTER Advanced File System (AdvFS).
5. Refer to *Network Configuration* for network setup information after you install the software subsets and configure a standalone system.

6. Refer to *Software License Management* for information on using the License Management Facility (LMF) to install software licenses from Digital Equipment Corporation.

Reader's Comments

Digital welcomes your comments on this or any other DEC OSF/1 manual. A Reader's Comment form is located in the back of each printed DEC OSF/1 manual and on line in the following location:

`/usr/doc/readers_comment.txt`

You can send your comments in the following ways:

- Internet electronic mail: `readers_comment@zk3.dec.com`
- Fax: 603-881-0120 Attn: UEG Publications, ZK03-3/Y32
- Mail:

  Digital Equipment Corporation
  UEG Publications Manager
  ZK03-3/Y32
  110 Spit Brook Road
  Nashua, NH 03062-9987

  The Reader's Comment form located in the back of each printed manual is postage paid if you mail it in the United States.

If you have suggestions for improving particular sections or find any errors, please indicate the manual title, order number, and section numbers. Digital also welcomes general comments.

Conventions

`%` `$`	A percent sign represents the C shell system prompt. A dollar sign represents the system prompt for the Bourne and Korn shells.
`#`	A number sign represents the superuser prompt.
`>>>`	The console subsystem prompt is three right angle brackets.
`% cat`	Boldface type in interactive examples indicates typed user input.
`file`	Italic (slanted) type indicates variable values, placeholders, and function argument names.
`cat`(1)	A cross-reference to a reference page includes the appropriate section number in parentheses. For example, `cat`(1) indicates that you can find information on the `cat` command in Section 1 of the reference pages.

Ctrl/*x*	This symbol indicates that you hold down the first named key while pressing the key or mouse button that follows the slash. In examples, this key combination is enclosed in a box (for example, Ctrl/c).

Preparing for the Installation 1

This chapter describes the three types of installations available:

- the update installation
- the basic installation (a full installation)
- the advanced installation (a full installation)

This chapter also defines the tasks you might need to complete before beginning the installation.

An update installation preserves many of the customizations on your current system and updates DEC OSF/1 Version 2.0 (and subsequent releases) to DEC OSF/1 Version 3.0. You can also perform an update installation from Version 1.3 to Version 2.0 to Version 3.0. The update installation will not update optional layered products.

A full installation (basic or advanced) affects many of the system files from the previous version of DEC OSF/1, and must be done if your system predates DEC OSF/1 Version 2.0.

The full installation procedure also provides a SYSTEM MANAGEMENT option called the *standalone environment.* This feature is described in Chapter 7 and it is recommended that only experienced users choose the SYSTEM MANAGEMENT option.

Before you begin the installation, you must complete the following steps:

- Check that you have the hardware needed for an installation.

  You must know the location and function of the controls and indicators on your hardware. You should also understand how to load and unload the installation media (CD–ROM) and know which disks are needed during the installation. See the documentation supplied with your hardware.

- Read the DEC OSF/1 *Release Notes*

  The *Release Notes* document any last-minute changes to the software. This information might be required for a successful installation. The *Release Notes* also contain information about the disk space requirements. If your system has small disks, this information is important for planning the installation.

- Decide which installation you want to perform. The update installation is intended for all users. If you have to do a full installation and you are a novice user, follow the basic installation procedure. If you are an experienced user, perform either the basic or the advanced installation.

  If you plan to install software on a Dataless Management Services (DMS) server, you must perform an advanced installation. DMS client systems are not installed using the procedures documented in this book. The `dmu` utility is used to install software on DMS clients. Refer to *Sharing Software on a Local Area Network* for information about setting up disk partitions for DMS servers, software requirements for DMS servers, and installing software on DMS clients.

- If you plan to perform an advanced installation, use the worksheets in Chapter 3 to determine if you should use the default partitions or if you need to customize partitions on your system. Chapter 3 contains a set of worksheets designed to help you plan how to allocate disk space for your DEC OSF/1 file systems.

- Back up your current system.

  If you are performing an update installation, back up your system to retain any information from your previous system. See *System Administration* for information about backing up your system.

1.1 Checking the Hardware Needed for Installation

You need some or all of the following hardware to install the DEC OSF/1 operating system software:

- A software distribution device

  You need a CD–ROM device to load the CD–ROM optical disc kit (for example, an RRD42, RRD43, or RRD44 optical disc drive). See your hardware documentation for instructions on how to load media.

  If you are installing from a RIS (Remote Installation Services) server, refer to the *Sharing Software on a Local Area Network* guide about performing remote installations.

- Ethernet, FDDI, or Token Ring for RIS installation

  You need a connection to the network (via Ethernet, FDDI, or Token Ring) if you are going to do a network installation. See your hardware installation guide for information.

- System disk (required)

  You use the system disk to boot your system.

- Data disks (optional)

  A data disk is a device on which you store data files. For a basic

installation, you need only one hard disk to install the DEC OSF/1 operating system. If you perform an advanced installation, you can choose to allocate certain file systems to disks other than the system disk.

Note

If you plan to use data disks to perform an advanced installation, back up any data on the disks before you begin. Backing up files is documented in the *System Administration* guide and is performed using the `dump` command.

- Console terminal (required)

  You use the console terminal to communicate with your system during the installation. Depending on your system and its configuration, you can perform the installation at either a serial hardcopy terminal, a serial video terminal, or at the console display if the system is a workstation.

1.2 Checking the Software Distribution Kit

Use the Part Listing to check your software distribution kit. The software distribution kit consists of a CD–ROM optical disc and instructions on how to use the CD–ROM. The documentation shipped with the kit includes this guide and the *Release Notes*.

1.3 Factory Installed Software (FIS)

Your system may arrive preinstalled with DEC OSF/1 software, referred to as Factory Installed Software (FIS). Under certain circumstances, you may need to reinstall DEC OSF/1 software. This can happen if an error occurs during FIS setup or if you plan to install optional hard disks.

During FIS setup, you are required to enter information such as the system name, the date, and the time. Refer to the *Update Installation Quick Reference Card* that was shipped with your system or refer to Section 6.2 in this guide if you need more information about entering system information.

If the FIS setup halts unexpectedly and you see the # prompt, make a note of any error messages that appear on the screen.

Next, press `CTRL/d` to restart the installation. Usually the installation continues, but you will need to correct the error when setup is complete. Consult the appropriate DEC OSF/1 document or system hardware document to identify and correct the error.

If the error prevents the installation from proceeding, it may be necessary to reinstall DEC OSF/1. To do this, you must follow the advanced installation procedure described in Chapter 5. You also need to read the instructions for

booting your processor described in Chapter 4 and your hardware documentation.

The disk on which the FIS was loaded may already have a customized partition table. If you are not an experienced DEC OSF/1 user, keep the existing disk label when you do the installation. This option is described in Section 5.2.7.

1.4 Determining the Type of Installation to Perform

The DEC OSF/1 operating system is designed to meet the requirements of various systems. The type of system you have determines which installation procedure to perform.

In DEC OSF/1 Version 3.0, you have the option to perform a full installation (which has basic or advanced procedures) or to perform an update installation procedure to update your DEC OSF/1 system from Version 2.0 (and subsequent releases) to Version 3.0. Update installations are designed to preserve many system customizations that you made to your existing system.

You can install the DEC OSF/1 software on your system either by using a CD–ROM optical disc containing the DEC OSF/1 software or by using the Remote Installation Services (RIS). A RIS installation uses the network to install software from a server that is established with RIS. Refer to *Sharing Software on a Local Area Network* for more information about remote installations.

1.4.1 Choosing the Advanced Installation over the Basic Installation

The full installation procedure described in this guide allows you to perform either a basic or advanced installation. The full installation also provides a System Management option that lets you work in a standalone environment. The standalone environment is described in Section 1.8 and Chapter 7.

The basic installation lets you get your system running with a minimum amount of work. You need only to refer to a few chapters in this guide. Perform a basic installation if *all* of the following statements are true:

- You want to use the default disk partitions for the `/usr` and `/var` file systems.
- You want to use the UNIX File System (UFS) as the file system type for the `/usr` and `/var` file systems.
- You are installing only the mandatory DEC OSF/1 software subsets.
- You want to configure the kernel immediately after installing software.

You must perform an advanced installation if any *one* of the following statements are true:

- You do not want to place the `root`, `/usr`, `/var`, and `swap` areas on the same disk or on the default partitions.
- You want to use customized disk partitions instead of using provided defaults.
- You want to select the Advanced File System (AdvFS) as the file system type for `root`, `/usr`, or `/var`.
- You want to specify two `swap` areas.
- You want to install optional software subsets in addition to the mandatory subsets.
- You do not want to configure the system immediately after the installation.
- You have special requirements for kernel configuration.
- You are planning to set up a DMS environment on a server system. Refer to *Sharing Software on a Local Area Network* for more information about DMS.

Section 1.5, Section 1.6, and Section 1.7 provide more information about the three types of installations.

1.5 Update Installation Program (installupdate)

The `installupdate` program is an operating system update procedure that preserves disk partitions, file systems, and file customizations on a running system.

This means that your system retains any special *customizations* – changes that you made to the version of DEC OSF/1 that is currently installed on your system. The amount of postinstallation administrative work after an installation update is greatly reduced when compared to a full installation.

Only the software subsets that are part of the DEC OSF/1 base system are updated. DEC OSF/1 base subset names start with `OSF`, and you can find them in the product area on the distribution media. For example, the product area on a RIS server typically exists in the `/var/adm/ris/risn.alpha` directory. *n* represents the number assigned to any one of the many RIS areas that may be installed on the RIS server. The product area on a CD–ROM typically exists in the `/mnt/ALPHA/BASE` directory for a CD–ROM mounted on the `/mnt` mount point.

During an update installation, you cannot select additional optional subsets. Additional optional subsets must be installed using `setld` when the update installation is complete.

The update installation will not affect any user files (files not shipped as part of the DEC OSF/1 product). The files that it affects are:

- Protected System Files (files prefixed with .new..)
- Unprotected System Files
- Obsolete System Files

See Chapter 2 for more information about these files. If you choose to do an update installation, read Chapter 2.

1.6 Basic Installation

The basic installation is designed for new users of the DEC OSF/1 operating system. The installation process is simpler and takes a shorter time to accomplish. However, the installation is generic, installing all mandatory software subsets. You have no control over the allocation of file systems as you do during an advanced installation.

The basic installation provides a default file system layout. Disk space of 64 MB is allocated for the root file system on whatever disk you select for your system disk. The `b` partition of the same disk is used for dumps and contains the swap space. The `g` partition of the disk is used for the `/usr` and `/usr/var` file systems.

The basic installation loads the following mandatory subsets which provide you with a minimally configured system:

Base System
Base System - Hardware Support
Compiler Back End
Kernel Header and Common Files
Standard Kernel Objects
Hardware Kernel Objects
Hardware Kernel Header and Common Files
Basic Networking Services
NFS(tm) Utilities

The following mandatory subsets are installed if you have a workstation:

X Servers
Basic X Environment
X Fonts
DECwindows 100dpi Fonts
Adobe Fonts

For descriptions of the mandatory subsets, see Section B.1.

Optional subsets are part of the base system and can be installed using the `setld` utility after the basic installation is complete. See Chapter 8 or *System Administration* for information about installing software subsets after

the installation. For descriptions of the optional software subsets, see Section B.2.

There are additional software subsets that are not part of the base system but can be installed after the installation is complete. See Appendix C for descriptions of the additional software subsets.

Choose the basic installation if all of the following conditions are true:

- You are not familiar with UNIX systems.
- You do not need to preserve custom partition tables or disk labels.

  Custom partition tables are partition tables that have been changed to sizes other than the default values. The partition table is included in the disk label.
- You do not want to use the Advanced File System (AdvFS) as the file system type for `root`, `/usr`, or `/var`.
- You do not need to put the `/usr` file system on a disk other than the system disk.
- You do not need to allocate the `/usr` file system on a partition other than the `g` partition of the system disk.
- You do not need to allocate a separate `/var` file system.
- You do not need to allocate a second swap space. You can allocate a second swap space after the installation.
- You do not need to install optional software at this time. You can add optional software after the installation procedure completes.

If you are performing a basic installation, continue the installation procedure by reading Chapter 4 in this guide.

1.7 Advanced Installation

If you choose to perform an advanced installation, you can:

- Select the default disk partitions and the default file system layout
- Decide on which disks you want the file systems to reside
- Choose between the UNIX File System (UFS) or the Advanced File System (AdvFS) as the file system type to be used for `root`, `/usr`, and `/var` file systems
- Choose to allocate a separate `/var` file system
- Allocate a second `swap` area

With the advanced installation, the required software subsets are automatically installed and you can choose to install some or all of the optional software subsets. Disk space of 64 MB is allocated for the root file

system for all disks.

The advanced installation loads the following mandatory software subsets and provides you with a menu of optional software subsets:

Base System
Base System - Hardware Support
Hardware Kernel Header and Common Files
Hardware Kernel Objects
Kernel Header and Common Files
POLYCTR advfs Kernel Objects
Standard Kernel Objects
Basic Networking Services
NFS(tm) Utilities
Compiler Back End
POLYCTR advfs

Note

The two POLYCTR software subsets are optional. They become mandatory only if AdvFS is chosen as the file system type for `root`, `/usr`, or `/var`.

The following mandatory software subsets are installed if you have a workstation:

Adobe Fonts
Basic X Environment
DECwindows 100dpi Fonts
X Fonts
X Servers

For descriptions of the mandatory software subsets, see Section B.1.

Optional software subsets are part of the base system; they can be installed during the advanced installation or after the installation is complete. See Chapter 8 or the *System Administration* guide for information on installing software subsets after the installation. For descriptions of the optional software subsets, see Section B.2.

You can install additional software subsets that are not part of the DEC OSF/1 after the base installation is complete. Refer to Appendix C for descriptions of the additional software subsets that you can install.

Choose the advanced installation only if you are experienced with UNIX file systems and if you need to perform the following tasks:

- Preserving custom partition tables or disk labels

  Custom partition tables are partition tables that are changed to sizes other than the defaults. The defaults are defined by the `/etc/disktab` file

and are listed in Appendix D. See Section 3.6 for information about modifying your disk partition layouts.

- Selecting file system layouts other than the default layouts:
  - Allocating the `/usr` file system to any disk partition on your system
  - Choosing the UFS or AdvFS as the file system type for the `root`, `/usr`, or `/var` file systems
  - Allocating two swap areas to any unused disk partition on your system
  - Allocating the `/var` area to the same disk partition as the `/usr` file system or allocating it to a different disk partition
  - Setting up a dataless management environment on a server system

If you are performing an advanced installation, continue with Chapter 3.

1.8 System Management Option

When you start an installation, you can choose the SYSTEM MANAGEMENT option from the Installation menu. This option provides you with a Bourne shell in the standalone environment. The standalone environment is primitive, but supports the initial phases of an installation. If you intend to do an advanced installation, you may need to choose this option and run one or more utility programs. For example, if you have to customize disk partition tables after you complete the installation planning worksheets in Chapter 3, use the SYSTEM MANAGEMENT option to run the `disklabel` program.

The standalone environment also includes commands that you use to recover from root file system corruption. You can also perform limited file system and disk maintenance tasks. You should perform system management tasks in the standalone environment only if you have extensive DEC OSF/1 operating system experience. See Chapter 7 for more information on the standalone environment.

1.9 Software Licensing

Product Authorization Keys (PAKs) are included with your distribution kit and are used to register a license for a product. PAKs are registered and loaded after the DEC OSF/1 software subsets are installed. To register and load the license PAKs for the DEC OSF/1 operating system and other products, you must use the License Management Facility (LMF). Refer to *Software License Management* or Section 6.6 for information about using LMF to load your PAKs.

The OSF-BASE PAK must be registered before you can use DEC OSF/1. This PAK provides simultaneous login capacity for two users and allows you to access the on-line documentation. The user `root` does not count as an interactive operating system user.

The OSF-BASE PAK is an availability PAK (see the LMF documentation for more information about PAK types). This PAK comes in varying denominations corresponding to your system type. If you have upgraded your system by purchasing new or additional CPU modules, you may need to upgrade your OSF-BASE license. This can be accomplished by registering the OSF-BASE PAK provided with your original system purchase along with additional OSF-BASE PAKS provided with your system upgrade purchases.

OSF-USR PAKs provide simultaneous login capacity for additional users above and beyond those provided by the OSF-BASE PAK.

Note

If you have an OSF-USR PAK having zero units, which allows an unlimited number of users, remove all other OSF-USR PAKs, including the one automatically registered during the installation, before registering the unlimited OSF-USR PAK.

You may have purchased other PAKs, or have other PAKs that were included with your system purchase that should also be registered using LMF. Refer to Section 6.6 for instructions on installing the OSF-BASE license.

The license for the DEC OSF/1 base system includes:

- A license to use the System V Release 3.2 derivatives.
- The right to use the POLYCENTER Advanced File System utilities. An optional layered product, The POLYCENTER Advanced File System Utilities, is separately licensed and provides online file-system maintenance, file-system resizing, file-level striping, and file undelete.
- A license to use the Adobe Display PostScript X server extension and client library.
- A license to use the disk concatenation feature of the Logical Storage Manager (LSM). A separate license is required to use the mirroring and striping features as well as the LSM administration graphical user interface (GUI).

The following additional licenses are available:

- DEC OSF/1 Developer's Extensions

  The DEC OSF/1 C Developer's Extensions license grants the right to use the C compiler and software development tools for program development and debugging.

- DEC OSF/1 Developer's Toolkit

  The DEC OSF/1 Developer's Toolkit license grants the right to use the software development tools for program development and debugging without the C compiler.

- DEC OSF/1 Server Extensions

  The DEC OSF/1 Server Extensions license allows users to install the DEC OSF/1 operating system over a Local Area Network (LAN) using the Remote Installation Services (RIS). The DEC OSF/1 Server Extensions license also allows access to Dataless Management Services (DMS).

The C compiler, software development tools, and RIS components are supplied in the installation kit. Before using these components, you must purchase the appropriate license and load a Product Authorization Key (PAK), using the License Management Facility (LMF).

Any additional interactive user licenses must be loaded into the system using LMF. For information on using the `lmf` utility refer to the *Software License Management* guide and Section 6.6.

Performing an Update Installation 2

This chapter describes how to prepare for and perform an update installation. This chapter also explains the phases of the update installation and lists the post-installation tasks that you should perform.

2.1 What is an Update Installation?

In DEC OSF/1 Version 3.0, you have the option to perform an update installation procedure to update your DEC OSF/1 base system from Version 2.0 (and subsequent releases) to Version 3.0. An update installation preserves disk partitions, file systems, and file customizations on an already running operating system. The update installation will not update optional layered products.

2.1.1 Files Affected By the Update Installation

The update installation will not affect any user files (files not shipped as part of the DEC OSF/1 operating system). The files that the update installation affects are:

- Protected System Files (.new..)

  An inspection of your system will show a number of files labeled with `.new..` prefixed to the file name. Examples of these files are listed in Section J.1 in Appendix J. These files are special to the DEC OSF/1 update installation. The `.new..` prefix allows the file to be delivered onto the system without overwriting the existing, and possibly customized, version of the file. One example of a protected file is the `/etc/hosts` file which is shipped as `/etc/.new..hosts`. The `/etc/hosts` file is considered the configured version of the file and typically contains customizations that were not present in the `/etc/.new..hosts` file. Only the configured version of protected system files should be customized. The `.new..` version of a file should never be customized.

  Similar to the `.new..` prefix, the `.proto..` prefix also exists for all protected system files. The `.proto..` files have special significance for Dataless Management Services (DMS) environments where a centralized server maintains root, `/usr` and `/var` file systems for client systems. The `.proto..` files allow dataless server System

Administrators to provide site-wide customizations in the `.proto..` files before the configured versions are used by the server's dataless clients.

One of the main benefits of performing an update installation is that customizations to protected system files are preserved. The mechanism for preserving customizations is the merge process. The `installupdate` procedure can detect whether customizations have been made by comparing the existing `.new..` file against the configured version. If customizations have been made, new functionality is merged into the configured file.

It is important that you do not delete the `.new..` and `.proto..` versions of protected system files because they are crucial to the proper operation of the `installupdate` procedure.

- Unprotected System Files

  The DEC OSF/1 update installation detects other customized system files that may be on your system which are not *merge protected* by the update installation. If any files of this type are detected during the update, they will be automatically saved as *`filename`*`.PreUPD` if disk space permits. As each file is saved it is recorded in the log file `/var/adm/smlogs/upd_custom_files`. You must manually merge your customizations into the new files when the update is complete.

  When your manual merges are complete, you can use the utility `/usr/bin/updadmin` to perform administrative tasks on the saved file versions.

  The `installupdate` procedure finds most of the changes to system files, not just the files that you deliberately modified. Some system files might be changed by a process, such as during the installation of a software application. Other system files might be changed as part of the normal system operation. For example, an empty log file becomes filled with data as the system runs.

- Obsolete System Files

  Obsolete files are files that were shipped in the previous version of DEC OSF/1, but are no longer part of the DEC OSF/1 software. During an update installation you have an opportunity to save these obsolete files so that you can either archive them or delete them from the system.

2.2 Steps In an Update Installation

The steps involved in an update installation are:

- Checking the status of your system

  Before you begin the installation, ensure that it is safe to begin the update. Gather the following information that is required to perform the update:

  - System backup status
  - Device names used in the update
  - Disk space required for the update
  - Network status for RIS updates
  - Loading additional subsets (must be deferred to post-installation)

- Choosing installation media

  You can choose whether you want to update your system from:

  - CD-ROM media
  - Remote Installation Services (RIS) server

- Responding to update installation dialog

  The update installation procedure has eight different phases. You are required to enter data only during the first three phases. The phases of the update installation are:

  - Verifying the system backup
  - Checking for registered Product Authorization Keys (PAKs)
  - Checking layered products
  - Checking the system status
  - Checking file conflicts
  - Detecting unprotected customized files
  - Loading and merging subsets
  - Configuring and merging subsets
  - Building the kernel

- Performing post-installation tasks

  You may have to perform the following tasks after the update installation is finished:

  - Check the installation logs
  - Manually merge customizations
  - Install additional software subsets

The Update Administration Utility is also described in this chapter. You use this utility to perform file administration tasks at any time after the update

installation is complete. See Section 2.8 for more information about the Update Administration Utility.

2.3 Checking the Status of your System

This section describes any aspects of your current system that must be checked before you begin the update.

2.3.1 System Backup

Digital recommends that you back up your system before beginning an update installation. If there are any interruptions after the update is loading software subsets, it is unlikely that the update will complete successfully. Should this happen, you must restore the original version of the DEC OSF/1 software that was previously installed on your system before you can attempt another update.

Consult *System Administration* for information about backing up your current system.

Warning

Do not use Ctrl/c for any reason during the update. Using Ctrl/c will cause `installupdate` to abort. You must then restore the previous version of the DEC OSF/1 software before you can attempt another update.

2.3.2 Device Names

If you plan to update your system from CD–ROM media, you will need to know the correct device name for the CD–ROM device where the media will be mounted. An example of a device name is `/dev/rz4c`.

If you are uncertain of your CD–ROM's device name, enter the `file` command, specifying the raw device, as follows:

```
# file /dev/rrz*c
/dev/rrz1c:  character special (8/1026) SCSI #0 RZ25 disk #8 (SCSI ID #1)
/dev/rrz2c:  character special (8/2050) SCSI #0 RZ25 disk #16 (SCSI ID #2)
/dev/rrz3c:  character special (8/3074) SCSI #0 RZ25 disk #24 (SCSI ID #3)
/dev/rrz4c:  character special (8/4098) SCSI #0 RRD42 disk #32 (SCSI ID #4)
/dev/rrz9c:  character special (8/17410) SCSI #1 RZ57 disk #72 (SCSI ID #1)
```

The CD–ROM device corresponds to an RRD device, in this example RRD42.

2.3.3 Disk Space

Refer to the *Release Notes* for information on the disk space requirements of DEC OSF/1 Version 3.0. Check your current disk usage using the `df` command. An update installation can be performed even if your disks are between 100% and 111% of capacity, although this is not recommended by Digital.

If your disk is already beyond 100% of capacity, consider using the `setld` utility to delete unwanted subsets before you begin the update. You should also remove all unnecessary core files and kernels that are wasting space. See Chapter 8 for more information about `setld`.

Note

If you previously performed an update installation on your system, you should have used the Update Administration Utility to remove unnecessary files before attempting the next update installation. If you have not removed these files, please do so now. The Update Administration Utility allows you to remove obsolete files which may conflict with the newly loaded subsets. Removing obsolete files also frees-up disk space. See Section 2.8 for more information about the Update Administration Utility.

2.3.4 Network Status

This section applies only to update installations from a Remote Installation Services (RIS) server. Refer to the *Network Configuration* guide if you need more information about obtaining network status. Refer to *Sharing Software on a Local Area Network* if you need more information about RIS.

Ask the person responsible for server system administration to ensure that the full pathname for the RIS kit is exported to your client machine, for example: `/var/adm/ris/ris0.alpha/kit.` Another way to see the RIS server's exports list is to execute the following command:

/usr/bin/showmount -e *RIS_hostname*

The Internet name and address of the server may need to be in the systems `/etc/hosts` file. You can run `netsetup` to add the name and address of the server or edit the `/etc/hosts` file to include an entry for the server,

similar to the following:

```
16.141.113.221 riskey.lab.rad.com riskey
```

The hosts entry in `/etc/svc.conf` must allow for *local* resolution of host (internet) addresses, for example: `hosts=local,yp`. You can run `svcsetup` to modify hosts to local or edit the `/etc/svc.conf` file.

2.3.5 Loading Additional Subsets

DEC OSF/1 Version 3.0 contains new optional product subsets that were not available in DEC OSF/1 Version 2.0 (and subsequent releases). You cannot select these new optional subsets during an update installation but you can use `setld` to install them when the update is complete. Refer to Chapter 8 if you want to install new subsets.

2.3.6 Changes to Logical Storage Manager Subset in Version 3.0

The Logical Storage Manager (LSM) subsets were available as a layered product in DEC OSF/1 Version 2.0 (and subsequent releases) but are now part of the base DEC OSF/1 release for Version 3.0. If you installed LSM under Version 2.0 of DEC OSF/1, LSM is automatically updated to Version 3.0. Refer to the *Logical Storage Manager* guide for more information about configuring and using LSM.

2.3.7 OSF-BASE Product Authorization Key (PAK) Required for Version 3.0

The OSF-BASE PAK is an availability PAK and must be registered (using the License Management Facility utility called `lmfsetup`) before you can use DEC OSF/1 Version 3.0. This PAK provides simultaneous login capacity for two users and allows access to the online documentation. The `root` login does not count toward the two user capacity. OSF-BASE PAKs registered for Version 2.0 are valid for Version 3.0.

OSF-USR PAKs provide simultaneous login capacity for additional users above and beyond those provided by the OSF-BASE PAK. Other PAKs may have been included with your distribution kit and should also be registered.

You will be able to update install your system to DEC OSF/1 Version 3.0 without having the OSF-BASE PAK registered. However, you will only be allowed `root` login until an OSF-BASE PAK is registered. Once the update completes, refer to *Software License Management* or Section 6.6 of this guide for more information on registering PAKs.

2.4 Choosing Update Installation Media

Depending on the devices and services available to your system, you can choose to update from a local CD–ROM device or across the network from a RIS server.

2.4.1 Running installupdate from CD–ROM Media

Read this section if you are using CD–ROM media. Complete the following steps:

1. Verify that your system is backed up so that you can recover the previous version if necessary. The *System Administration* guide documents backup procedures (using the `dump` command).
2. Boot to single user mode or shut down your system as shown in the following command:

   ```
   # shutdown +10 preparing to update the system
   ```

   In this example, `+10` shuts down the system in ten minutes and sends the message `preparing to update the system` to all logged in users.

   Note

   If you are currently using the Logical Storage Manager (LSM), proceed to Step 3. If you are not using LSM, proceed to Step 4.

3. Follow this step only if you installed LSM. Once the system is in single user mode, enter the following command to activate LSM before running `bcheckrc` (in step 4):

   ```
   # /sbin/lsmbstartup
   ```

4. Once the system is in single-user mode, mount the local file systems as follows:

   ```
   # /sbin/bcheckrc
   ```

   The `bcheckrc` command also runs `fsck` to check the file system. If `fsck` finds a problem with the root (/) partition, the system shuts down and reboots to multiuser mode.

5. There are two ways to start `installupdate` depending upon how the CD–ROM is mounted:

   a. To run `installupdate` from a CD–ROM device, ensure that the CD–ROM is loaded in the caddy as described in Appendix A. Enter the following command:

```
# installupdate <device>
```

In the previous example, <device> is the name of the CD–ROM device where the distribution volume for DEC OSF/1 Version 3.0 is mounted (such as /dev/rz4c).

b. If you already have an instruction in your /etc/fstab file to mount the CD–ROM device, the distribution media is automatically mounted on the mount point that is specified in your existing /etc/fstab file. In that case, enter the following command to run installupdate:

```
# /sbin/installupdate <mnt-pt>
```

In the previous example, <mnt-pt> is the mount point specified in your /etc/fstab file.

Proceed to Section 2.5, which describes the installation dialogue.

2.4.2 Running installupdate from a RIS Server

Read this section if you are performing an update installation from a RIS server.

Ensure that the network is configured and that your system can communicate with the RIS server. Use the ping command to verify the network connection:

```
# ping <server>
```

server is the name of the local RIS server.

Make sure that the optional subset OSFINET200 (Additional Networking Services) is installed on your system. This subset contains the named file, the Internet domain name server, which installupdate requires for RIS operation. To determine whether or not OSFINET200 is installed, enter the following command as superuser:

```
# setld -i | grep OSFINET
```

If OSFINET200 is installed, the following message should appear:

```
OSFINET      installed    Additional Networking Services
                          (Network-Server/Communications)
```

If OSFINET200 is not installed, use the setld command to load this subset. Chapter 8 describes how to use the setld command.

Your RIS administrator must ensure that your system is registered as a RIS client and is able to access the DEC OSF/1 Version 3.0 RIS kit. Perform the following steps to update your system:

1. Verify that your system is backed up so that you can recover the previous version if necessary.

2. Boot to single user mode or shut down your system as shown in the following command:

```
# shutdown +10 preparing to update the system
```

In this example, `+10` shuts down the system in ten minutes and sends the message `preparing to update the system` to all logged in users.

Note

If you are currently using the Logical Storage Manager (LSM), proceed to Step 3. If you are not using LSM, proceed to Step 4.

3. Follow this step only if you installed LSM. Once the system is in single user mode, enter the following command to activate LSM before running `bcheckrc` (in step 4):

```
# /sbin/lsmbstartup
```

4. Once in single-user mode, mount the local file systems as follows:

```
# /sbin/bcheckrc
```

To run `installupdate` from a RIS server, enter the following commands:

```
# /sbin/installupdate <server>:
```

`<server>:` is the name of the RIS server appended with a colon.

2.5 Responding to the Update Installation Dialog

This section describes the information and prompts that are displayed during the update installation.

The update installation procedure may take from 60 to 90 minutes. The number of subsets loaded and the type of installation media used also affects the time required for an update. If there are no errors during the update, you are required to enter information only once during the early phases of the update. You do not need to monitor the update. However, if an error occurs, a message notifies you and offers options for proceeding.

The following sections describe the information displayed on your screen during the update.

Warning

You cannot use Ctrl/c to terminate the update. If you use Ctrl/c, you must reinstall the version of DEC OSF/1 that was originally on your system before you can update to DEC OSF/1 Version 3.0.

2.5.1 Verifying the System Backup

The first message displayed on your screen confirms the new version, and the version that you are updating from. This message also reminds you that your system should be backed up so that you can recover the current version of the system if an interrupt should occur.

```
The DEC OSF/1 Version 3.0 (Rev. xxx) Update Installation
will update the following DEC OSF/1 products:

        DEC OSF/1 V2.0
        DEC OSF/1 V2.0B
        DEC OSF/1 V2.1
        DEC OSF/1 V2.1B

Digital Equipment Corporation recommends that you perform complete
system software backups before proceeding.
```

At this point, the update procedure also checks for certain applications that may be incompatible with update installations. If these products are found on your system, warning messages are displayed as described in Section 2.5.3. If the layered product messages are not displayed, and you are satisfied with the state of your system backup, you can proceed with the update. A prompt is displayed as follows:

```
Do you want to continue the update installation? (y/n) [n]:
```

Enter y to proceed with the installation or n if you want to exit and back up your system.

2.5.2 Checking for OSF-BASE PAK

The install update procedure checks for the existence of a valid registered OSF-BASE PAK. If none is found, the following warning message is displayed:

```
WARNING:  OSF-BASE  PAK  not installed.  The OSF-BASE PAK
must be registered before you can use  DEC OSF/1 V3.0  (Rev. xxx).
After the update installation completes, refer to the License
Management Facility (LMF) section in the Installation Guide for
information about registering PAKS.
```

As mentioned in Section 2.3.7, you can proceed with the update installation if a valid OSF-BASE PAK is not registered. However, when the update completes, you must register the appropriate PAKs via LMF to use DEC OSF/1 Version 3.0.

2.5.3 Layered Products

Read this section if the layered product messages display as described in Section 2.5.1.

For DEC OSF/1 Version 3.0, `installupdate` checks whether certain software applications are installed on your system. If detected, these applications may be affected by the update as follows:

- Some applications operate correctly after an update. However, if you see a warning about these applications, you should test the application after the update is complete.
- Some applications must be removed before the update can proceed.

If `installupdate` detects any applications that may affect the update, messages are displayed as follows:

- If any applications currently installed on your system require reinstallation, a message similar to the following is displayed:

```
The following layered products may require re-installation after
the update installation has completed:

    Product A
    Product B
        .
        .
        .
Press Return to review message again.
```

  You have the option to exit from the installation procedure at this point, and the following prompt is displayed:

```
Do you want to continue the installation? (y/n) [n]:
```

  Enter `y` to proceed with the installation or `n` if you want to exit the update installation and remove the applications before restarting the update.

  If you decide to proceed without removing these applications, test the applications when the update is finished. Digital recommends that you reinstall any applications that are critical to your use of the updated system.

- If any applications installed on your system prevent the use of `installupdate`, a message similar to the following is displayed:

```
This system cannot be updated with the following layered products
installed on it.  Please remove these products from your system
before attempting an update installation:

    Product A
    Product B
         .
         .
         .
Press Return to review message again.
```

Either or both of the previous messages may be displayed, but the second message takes precedence. If that message appears, the installation cannot proceed and you must exit at the following prompt:

```
Enter any character and press Return to stop:
```

Your system is returned to its original state, that is, the state your system was in before the update procedure.

You can delete the applications and restart the update installation. When the update is complete, reinstall the correct version of the application that is compatible with DEC OSF/1 Version 3.0.

2.5.4 Checking the System Status

The next step in the update involves checking the system status and collecting data that is used in the update. This step takes up to 20 minutes, and you are not required to enter any data.

Your screen will display a series of messages similar to the following:

```
******   Checking current state of system

Depending on the system configuration, this may take
up to 20 minutes...
     Working....Wed Aug 11 14:14:09 EDT 1994
```

During this phase of the update, the update procedure does the following:

- Makes a list of installed subsets. This list is used for selecting and loading DEC OSF/1 Version 3.0 subsets.
- Checks for file type conflicts. This is described in detail in Section 2.5.5.
- Makes a list of files that are obsolete in DEC OSF/1 Version 3.0.
- Makes a list of system files that are customized.
- Runs `fitset` to ensure that there is adequate disk space for the updated subsets.

If no problems are detected during the checking phase, you do not need to enter any more information beyond this point. All messages and output are stored in log files for later reference.

2.5.5 File Type Conflicts

In DEC OSF/1 , system file types can be files, directories, symbolic links, block devices, or pipes. The update installation procedure expects to find system file types currently installed as they were shipped with the base system. The status of the file types is verified during the system status check. For example, if a file shipped as type directory in Version 2.0 and then the same file name ships as type symbolic-link in Version 3.0, the update installation detects these differences and aborts. When file system types are modified as part of a system customization, the update installation cannot proceed. This is intended to preserve the integrity of the software product about to be installed.

Messages are displayed when file type conflicts are found. In the following example, `/usr/tmp` was shipped as a symbolic link and was changed to a directory:

```
The following directories on this system conflict with assigned file
types originally shipped in the DEC OSF/1 operating system.  This can
be caused, for example, if a symbolic link is replaced with a real
directory.

These conflicts must be resolved before an update installation can be
performed on this system.   Additional file status information can be
found in subset inventory files located in the /usr/.smdb. directory.

For later review, this message is also logged in

        /var/adm/smlogs/update.log

        ./usr/tmp should be Symbolic Link to ../var/tmp

The update procedure will exit and return the system to the state
it was in prior to starting the procedure
```

You can review the list of file conflicts or exit as follows:

```
Press Return to review message again.
Enter any character and press Return, to exit:
```

When you exit from the update procedure, the following message is displayed:

```
Returning system to Pre-Update state...done
Update Installation exiting.
```

You must resolve any conflicts shown in the message before you can restart the update installation. If you do not resolve the conflicts, you will not be able to perform an update installation.

2.5.6 Unprotected Customized File Detection

If `installupdate` detects any unprotected customized system files (as described in Section 2.1.1), an attempt is made to save them to a `.PreUPD` extension (for example, `custom_file.PreUPD`) so that you can decide

what to do with them after the update is complete. If disk space limitations prohibit saving unprotected customized files, the Update Administration Utility is invoked automatically which gives you the option to view these files and save them to backup media. The file name of each unprotected customized file is also logged in the file `/var/adm/smlogs/upd_custom_files` as a reminder of the files which require recustomization.

Files that have been successfully saved to the `.PreUPD` extension are listed as such in the file `/var/adm/smlogs/upd_custom_files`.

The following message is displayed if customized files have been found and successfully saved:

```
Unprotected customized system files have been found on
this system and have been saved to  'filename.PreUPD'.
A listing of the files has been logged in
/var/adm/smlogs/upd_custom_files.

After the update installation has completed,  use the
Update  Administration  Utility  (/usr/sbin/updadmin)
to perform system administration tasks on these files.
```

The following dialog (from the Update Administration Utility) is displayed if customized files have been found but could not be saved due to disk space limitations:

```
******* Unprotected Customized System File Administration ********

There are unprotected  customized  versions  of  DEC OSF/1  system
files currently installed  on  your  system  that are in danger of
being overwritten by new DEC OSF/1 V3.0 (Rev. xxx) versions of
the files.

These files are  typically  customized  by users for projects they
may be working on, or by layered  product software implementation.

If you haven't already backed up your system,  save these files to
back up media at this time.  You can restore these files back onto
your system after the update installation has completed.

     Unprotected Customized System File Admin Menu
     ---------------------------------------------
     q) Quit installation
     s) Save files
     v) View list of files
     x) Return to installation

     Enter your choice:
```

The Update Administration Utility was invoked automatically. A menu shows the available options. The Update Administration Utility is described in Section 2.8. If you choose to continue with the update, the following message is displayed:

```
A listing of unprotected customized system files
found by the Update Installation has been logged
in /var/adm/smlogs/upd_custom_files.

After the update installation has completed,  use the
Update  Administration  Utility  (/usr/sbin/updadmin)
to perform system administration tasks on these files.
```

2.5.7 File Size Checks

The update installation procedure performs size checks to make sure that the list of new subsets will fit on your system. In your preparation stage before the update, you should have removed all unwanted core files, crash dumps, extra kernels, etc., that may be wasting space.

If the update installation process determines that there is adequate space for all new subsets, no user interaction is required, and the process continues by loading the subsets. If the update installation determines that there is inadequate space for the loading of new subsets, it attempts to buy back space from saved unprotected customized files. If the amount of space it can buy back from removing saved copies of unprotected customized files is greater than the space it needs to load new subsets, it displays a message similar to the following:

```
------------------------------------------------------------------

file system /usr needs 9555 Kbytes more to install the software
specified.

------------------------------------------------------------------

The DEC OSF/1 Version 3.0 Update Installation has used
13021 Kbytes of disk space to save unprotected customized system
files on your system to a .PreUPD extension.

Unprotected customized system files are DEC OSF/1 system
files that have been customized by users or by layered product
implementation. The files are are in danger of being overwritten
without the customizations in them being saved because they are
unprotected.

If you have already backed up your entire system, you can continue
with the update installation and restore customizations to the
newly installed files at a later time. Continuing at this point
causes all files saved to a .PreUPD extension to be removed.

If you want to ensure that the unprotected customized system files
```

```
on this system have been backed up, you can select option u
from the following menu and invoke the Update Administration Utility.
This utility allows you to view and save unprotected customized
system files on your system. The utility also allows you to continue
or quit the update installation procedure. If you quit the update
installation procedure at this point, the system returns to the
same state it was in prior to invoking the update installation.

    DEC OSF/1 Update Installation Main Menu
    ---------------------------------------
    c) Continue installation
    q) Quit installation
    u) Update Administration Utility
    v) View error message again

    Enter your choice:
```

If the amount of space that the update installation can buy back is not enough to allow the loading of new subsets, a message similar to the following is displayed:

```
-----------------------------------------------------------------

file system /usr needs 11104 Kbytes more to install the software
specified.

-----------------------------------------------------------------

You will need to remove some software subsets and/or user files
from this system before performing an update installation.

    Returning system to Pre-Update state...done.
    Update Installation exiting.
```

2.5.8 Loading Subsets and Merging

Next, `installupdate` loads the DEC OSF/1 Version 3.0 subsets that match the subsets already loaded on your system. All new mandatory subsets are loaded automatically. Optional subsets are loaded only if they were loaded previously. If you want to install additional optional subsets provided in DEC OSF/1 Version 3.0, you must load these using the `setld` command when `installupdate` is complete.

A series of messages is displayed, similar to the following:

```
******   Updating system to DEC OSF/1 V3.0  (Rev. xxx)

        Working....Tue Jul 12 17:43:16 EST 1994

Base System
   Copying from ds9 (inet)
        Working....Tue Jul 12 17:45:17 EST 1994
   Verifying
```

```
        Working....Tue Jul 12 17:47:14 EST 1994
   .
   .
   .
Hardware Kernel Objects
   Copying from ds9 (inet)
        Working....Tue Jul 12 18:04:30 EST 1994
   Verifying
```

When the subsets are loaded and verified, the protected customized system files are automatically merged with any customized files found on your system. See Section 2.1.1 for a description of the protected files. A series of merge messages similar to the following are displayed:

```
*** Merging new file ./etc/.new..gettydefs into existing file
                     ./etc/.proto..gettydefs

          adding version mechanism to console entry

          Merge completed successfully
```

When all merges are complete the update installation ends with the following message:

```
Update Installation complete with loading of subsets.
Rebooting system with DEC OSF/1 V3.0 (Rev xxx)
generic kernel for configuration phase...
```

Note

If you installed LSM previously, the update installation of LSM may produce some file system warning messages during the reboot process regarding unreferenced files. You can ignore these messages. These unreferenced files are the LSM-specific device special files that are modified during the update installation procedure.

2.5.8.1 Recovering from Failures During Loading of Subsets

If the update installation fails before subsets are loaded, you can usually recover.

If necessary, you can bring your system back to multiuser mode by issuing the following command:

```
# init 3
```

Error messages describe the type of error that occurred. Fix the error(s) reported by the message(s) and restart the update installation process. Refer to Section 2.4.1 if you are running `installupdate` from a CD–ROM, or Section 2.4.2 if you are running `installupdate` from a RIS server.

If the update installation fails during the loading of subsets, you most likely will have to restore your operating system back to the original version of

DEC OSF/1 that was previously installed on your system and reattempt the update installation.

2.5.9 Configuring Subsets and Merging

If the system is set to boot to multiuser mode, configuration of the new system will start automatically. If the system reboots to single user mode, enter the following command:

```
# init 3
```

A series of messages similar to the following is displayed:

```
*** SYSTEM CONFIGURATION ***


Configuring Base System  (OSFBASE300)

   *** Merging new file ./etc/.new..gettydefs into existing file
                  ./etc/gettydefs

           adding version mechanism to console entry

           Merge completed successfully
```

2.5.10 Building the Kernel

The kernel configuration begins after the configuration of subsets is complete. The system automatically builds a kernel and then reboots. During this phase of the update, the system configuration file `/sys/conf/<system_name>` is automatically saved to `/sys/conf/<system_name>.bck`, and the following message is displayed:

```
Saving /sys/conf/ARUBA as /sys/conf/ARUBA.bck
```

In the previous example, **ARUBA** is the host name of your system. (If you customized this file, one of the post-installation tasks is to edit the new version and include your customizations.)

The kernel build proceeds with the following messages:

```
      The system will now automatically build a kernel
      and then reboot. This will take approximately 15
      minutes, depending on the processor type.


*** PERFORMING KERNEL BUILD ***
     Working....Tue Aug 21 19:47:16 EDT 1994
```

Caution

The update provides a basic kernel configuration file which includes the required options and pseudodevices needed to be compatible with the current installed version. However, the update does not propagate any special configuration options (such as those required for layered products).

If your system also has devices not supplied by Digital, you will need to manually add these options and/or devices to the kernel configuration file. Use the `doconfig` command and see Chapter 6 for more information.

2.5.10.1 Recovering from Failures During Kernel Build

If the tailored kernel build fails at the end of your update installation, the following reasons are possible:

- A kernel layered product is incompatible with the base operating system.

  If layered products are installed, a tailored kernel build is automatically attempted with only the base operating system. If this build fails or if layered products are not installed, the next reason is more likely.

- The merge of either the `/sys/conf/files` or `/sys/conf/alpha/files` file has failed.

To work around the file merge failure, do the following:

1. Exit the tailored kernel build by pressing Ctrl/c. This causes the generic kernel to boot.
2. Change to the `/sys/conf` directory as follows:

   ```
   # cd /sys/conf
   ```

3. Rename the `files` file as follows:

   ```
   # mv files files.bck
   ```

4. Create a new `files` file as follows:

   ```
   # cp .new..files files
   ```

   This propagates the latest `files` file to the configured state. Be sure to add any customizations contained in the `files.bck` version to the new `files` file.

5. Change to the `/sys/conf/alpha` directory.
6. Repeat steps 3 and 4 for this directory.
7. Rebuild the tailored kernel using `doconfig`. After the tailored kernel builds, copy the kernel to `/vmunix`, and reboot.

2.6 Device Special File Name Changes

Device special file names may change as a result of the update installation. After successfully completing an update installation, it is possible that if you have added tape devices to your system after the initial installation, the unit numbers and device special file names may be reordered (remapped) as a result of the update process.

As an example, tape device tz13 is installed with device special file names `*rmt0*`. Then, tape device tz12 is installed and assigned device special file names `*rmt1*`. After an update installation, tape device tz12 is assigned device special file names `*rmt0*`, and tape device tz13 is assigned device special file names `*rmt1`.

2.7 Postinstallation Tasks

This section describes any tasks that must be completed after the update is complete.

2.7.1 Installation Log Files

Information about the update will be stored in log files. Installation and configuration data is appended to any existing files. Review the last entry in the following files to check the latest installation and configuration data:

- The update installation log is located at:
  `/var/adm/smlogs/update.log`
- Information about the system configuration is stored in a log file at:
  `/var/adm/smlogs/it.log`
- Obsolete files are listed in:
  `/var/adm/smlogs/upd_obsolete_files`
- Customized files are listed in:
  `/var/adm/smlogs/upd_custom_files`
- Failed merges are listed in:
  `/var/adm/smlogs/upd_mergefail_files`

If no obsolete, customized, or failed merge files are detected during the update installation, the relevant log files will not contain any data.

A sample installation dialogue is located in Appendix I. Sample listings of files that were found and saved during the update are shown in Appendix J. Digital recommends that you examine the log file when the update is complete to ensure that all files merged successfully.

2.7.2 Editing the /etc/bootptab File

The `/etc/bootptab` file contains information needed to boot remote clients. The format of the `/etc/bootptab` file has been slightly modified from DEC OSF/1 Version 2.0 to Version 3.0. Non-client (dummy) entries are now prefixed with a period (`.`) in Version 3.0. This prefix distinguishes non-client entries from client entries.

If you performed the update installation on a DEC OSF/1 Version 2.0 operating system that is configured as a RIS server, the `/etc/bootptab` file will not be automatically updated to the Version 3.0 format. Although RIS will still operate properly, messages will be logged in the `syslog` file. Digital recommends that you modify the `/etc/bootptab` file so that the dummy entries are prefixed by the period (`.`). Modifying the `/etc/bootptab` file to include the prefix increases the performance of the RIS server, and prevents the `syslog` file from growing excessively large. Refer to *Sharing Software on a Local Area Network* for more information about the entries in the `bootptab` file.

2.7.3 Manually Merging Customizations

Some protected files may not be correctly merged during the update, and some unprotected files are not automatically merged. Manual merging involves editing the new versions of system files with a text editor to paste in your customizations. The following information is saved so that you can merge your customizations into the new versions.

- Unprotected system files

  When the update is complete, you should check for any saved files. Refer to the log file: `/var/adm/smlogs/upd_custom_files.` Edit the new version of each logged file to include your customizations.

- Configuration file

  You must also edit the system configuration file `/sys/conf/`*`system_name`* if you customized this file in the previous version of DEC OSF/1. The saved version is located in `/sys/conf/`*`system_name`*`.bck`.

- Failed merges

  If any files failed to merge during the update, an error message is displayed on your screen. This error is also logged in a file located at: `/var/adm/smlogs/upd_mergefail_files.` Check the log to identify any failed merges and manually edit any files that failed to merge, adding your customizations. The original version of the files will always be preserved for your reference as: *`filename`*`.PreMRG`. See Section 2.8 for information on how to access the original version of a file.

When any manual merges are complete, your system is ready to use. At this time you can install additional optional subsets provided on the DEC OSF/1 Version 3.0 distribution media. Refer to Chapter 8 for information about installing optional subsets.

2.8 Update Administration Utility

When you are satisfied that all merges are correct and your system is working as expected, use the Update Administration Utility to perform management tasks (such as saving, viewing, or deleting files) on the unprotected customized, obsolete, and PreMRG files. Unprotected customized files are saved to files with `.PreUPD` extensions.

Apart from managing system resources effectively, using this utility provides two important safeguards:

- You can archive and delete customized files so that future update installations can reuse the filenames. If you attempt to run an update without having first used this utility to administer PreUPD files from the previous update, the installation will detect these and prompt you to overwrite the existing PreUPD files or to exit the utility.
- You can remove obsolete files that may cause problems when running the new version. In particular, many obsolete reference pages can remain in system directories, and there is a risk that an incorrect reference page might be displayed.

2.8.1 Update Administration Utility Main Menu

Enter the following command to access the Update Administration Utility Main menu:

```
# /usr/sbin/updadmin
```

You can also invoke the Update Administration Utility from the Setup menu. If you have a workstation, choose the `Setup` option from the `Applications` menu in the windows Session Manager. If you do not have a workstation, enter the following command to access the Update Administration Utility from the Setup menu:

```
# /usr/sbin/setup
```

A submenu of options is displayed which varies depending on the software installed on your system. Choose the Update Administration option from this submenu. The Update Administration Utility can be invoked only after an update.

Regardless of the manner in which you invoked the utility, the Update

Administration Utility Main menu is displayed as follows:

```
The Update Administration Utility is used to perform administration
functions on a system that has been updated by /sbin/installupdate.

Please make a selection from the following menu.

        Update Administration Utility Main Menu
        ---------------------------------------
        c) Unprotected Customized File Administration
        o) Obsolete System File Administration
        p) PreMRG File Administration
        x) Exit this utility
```

To exit from the utility and return to the operating system prompt at any time, choose the exit option as follows:

```
#     Enter your choice: x
```

Choose either of the following options to perform file administration tasks (such as saving, viewing, or deleting files):

- Unprotected Customized File Administration

  When you choose this option, the following information is displayed:

  ```
  ******* Unprotected Customized System File Administration ********

  Unprotected customized system files are typically DEC OSF/1 system
  files that have been  customized by users for projects they may be
  working on, or by layered product software implementation.

  Some of these  customized  files  may no longer be compatible with
  the DEC OSF/1 Version 3.0 operating system.
  ```

- Obsolete System File Administration

  When you choose this option, the following information is displayed:

  ```
  *** Obsolete System File Administration ***

  There are DEC OSF/1 files currently installed on your system that are
  no longer shipped or supported in DEC OSF/1 Version 3.0.

  Some of these Obsolete files may no longer be compatible with the DEC
  OSF/1 Version 3.0 operating system.  You may want to back up these
  files and then delete them from your system to regain disk space.
  For your reference, the Obsolete files are listed in
  /var/adm/smlogs/upd_obsolete_files.
  ```

- PreMRG File Administration

  Premerge (PreMRG) files are protected files that are on your system from a previous update. When you choose this option, the following

information is displayed:

```
************  PreMRG System File Administration  ***************

There are .PreMRG files left over on your system from an update
installation. PreMRG files are copies of system files as they existed
prior to updating your system.  They are left on the system after an
update installation for reference purposes only.

If any system file customization merges were not successful, you can
reference the .PreMRG file to include those customizations in the
post merged file now residing on the system.

In most cases, PreMRG files can be deleted from the system.
```

If you choose any of the three main menu options, a submenu is displayed. This submenu displays options to view, save, or delete the unprotected, obsolete, or PreMRG files.

The following examples show only Unprotected Customized File Administration. The administration process, and the submenu options, are exactly the same for Obsolete System File Administration and PreMRG File Administration.

To select an option from any menu, enter the character displayed before each option, followed by <Return>. For example:

```
#     Enter your choice: c
```

2.8.2 File Administration Menu Options

If you select any of the three Administration options from the main menu, the File Admin menu is displayed as follows:

```
Unprotected Customized System File Admin Menu
---------------------------------------------
s) Save files
d) Delete files
v) View list of files
x) Return to previous menu
```

The type of the submenu depends on which option you chose from the Main menu. Enter **x** to return to the Main menu. The other options in this submenu are described in the following sections.

2.8.3 Save Files Option

This option enables you to save all the files that were found during the update installation. You can decide where to store them. This option is useful for managing disk space.

If you choose this option, another menu is displayed as follows:

```
Select a method of archiving your files:
----------------------------------------
d) Save files to directory on disk
i) Save files to tar image on disk
t) Save files to tape media device

Enter your choice from the menu above, or
press <RETURN> to go back to the previous menu:
```

For example, if you want to save the files to a tape device, enter `t` and press Return. You will be prompted to enter the name of a backup device, as follows:

```
Enter the name of the tape backup device (for example: /dev/nrmt0h)
that you want to use to back up customized files, or press <RETURN>
to go back to the previous menu:
```

Enter the device name as follows:

```
...previous menu: /dev/nrmt0h
```

The save utility verifies the device and saves the files as follows:

```
Inspecting /dev/nrmt0h...

Saving customized files to /dev/nrmt0h...
done.
```

If you chose the option to `Save files to directory on disk`, if the pathname that you specified does not already exist, you will be asked to confirm if the directory or file should be created (in this example `/obsolete` does not exist):

```
There is no /obsolete directory on this system.

Do you want to create one? (y/n) [y]: y
```

The files are now saved. You can return to the File Admin menu to either choose another option or exit to the Main menu.

2.8.4 Delete Files Option

This option enables you to delete all the files (obsolete, PreMRG, or unprotected customized) that were found during the update install. Use this option if you have either backed up the files to a storage device or if you no longer need them and you want to recover the disk space.

If you choose this option, the following prompt is displayed:

```
Please confirm your intent to delete customized system files from the
system. (y/n) [n]:y
```

If you confirm the deletion, a message is displayed as follows:

```
Removing customized files...

Finished deleting customized files.
```

When the deletion is complete, the File Admin menu is displayed again.

2.8.5 View List of Files Option

This option is used to display a list of the customized files that were found during the update installation. It can be used to verify what files were found, before you decide whether you want to save or delete the files.

If you choose this option, the list of files is displayed screen by screen and you can press Return to display each screen. At the end of the list you can display the complete list again or return to the File Admin menu. A sample of the output follows:

```
==========================================
= Unprotected Customized OSFBASE Files
==========================================
./etc/zoneinfo/Australia/South.PreUPD

==========================================
= Unprotected Customized OSFINET Files
==========================================
./sbin/named.PreUPD
./usr/sbin/screend.PreUPD

Enter 'r' to review files again, or press RETURN
to go back to the previous menu:
```

2.8.6 Messages and Archive Options

There are several messages and options that the Update Administration Utility displays only under certain conditions. These messages are explained as follows:

- If you choose an option to process certain files and the list of files has already been removed from the system, one or more of the following messages is displayed:

  ```
  No customized file list exists.
  No obsolete file list exists.
  No PreMRG file list exists.
  ```

- If you attempt to save files to a directory that does not exist you are

prompted to confirm that you want this new directory to be created.

```
There is no <name> directory on this system.
Do you want to create one? (y/n) [y]:
```

- If the program cannot create the directory that you specified, the following message is displayed:

```
Cannot create <directory name>.
```

- If you choose an option relating to `.PreMRG` files, the following message warns you that the utility will search every file system that is Unix File System (UFS) mounted:

```
Checking system for .PreMRG files.  Depending on the number
of filesystems mounted, this may take a few minutes...
```

- If you choose an option to save files to a tar image, the following message gives you a further option to compress your tar file and save storage space.

```
Compressing the tar image will result in less disk space used.
Do you want to compress the tar image? (y/n) [y]:
```

- If the save program was unable to compress the tar file, the following warning message is displayed:

```
Unable to compress <tar file>
```

- If you chose an option to delete files that have not been backed up, you are given an option to select another menu item and save the files first.

```
Back up of <file type> files not detected.

If you have not backed up the <file type> files yet, please do so at
this time by answering 'no' to the question below and selecting the
's' option from the previous menu.
```

- If you are attempting to save files that have already been saved, the following message is displayed:

```
You have already saved the <file type> files.
Do you want to save them again? (y/n) [n]:
```

- If you specify a device for a save operation, and the save program cannot access that device, the following message is displayed:

```
Cannot locate a special device named <device name>
```

- If the device that you specified was available, but the save program was

not able to write to that device, the following message is displayed:

```
Cannot write to <device name>
```

- If you specify an existing `tar` file name, you are given the option to append saved files to the existing file:

```
A file named <file name> already exists on this system.
If this is a tar archive file you can append additional files to it.
Otherwise, answer 'n' to the question below.

Do you want to try appending to it? (y/n) [n]:
```

Planning the Disk Space 3

Read this chapter if you plan to perform an advanced installation. This chapter contains information to help you determine which disk partition to use for file systems, swap space, and crash dump space. You should know what the file systems will be used for and understand the concepts associated with allocating a file system to a disk partition. Refer to the *System Administration* manual for more information.

Throughout this chapter you are encouraged to complete worksheets to calculate the size of a file system. These worksheets will help you to:

- Identify available disks
- Plan the swap space
- Plan the `var` area
- Plan the `/usr` file system
- Decide whether to use the default disk partition layout, the existing disk partition layout, or change the partition layout if necessary.

It will be helpful to keep in mind the following equations:

- One block equals 1/2 kilobyte (kB) or 512 bytes.
- One megabyte (MB) equals 1024 kB (1,048,576 bytes), or 2048 blocks.

For example, to determine the size in MB of the default disk partitions for an RZ56 disk, divide the size, in blocks, by 2048.

If you are installing a new system on a disk currently being used under a DEC OSF/1 or another OSF/1 implementation, and the disks have been labeled, you can determine the size of the disk partitions by becoming `root` and using the `disklabel` command, which is described in Chapter 7. You can also refer to the disk information provided in Appendix D to determine the default size of the disk partitions.

The DEC OSF/1 system uses 15 percent of a partition for file system overhead. When you determine the size your disk partitions need to be, subtract 15 percent of the partition size to give you the total available space.

The information in Section 3.1, Section 3.2, Section 3.3, Section 3.4, and Section 3.5 will help you complete the summary worksheet in Section 3.6. When complete, this worksheet provides the file system layout information that is required during the advanced installation.

3.1 Planning Disk Layout

Your system disk must be one of the supported devices. Table 3-1 shows the supported devices and their associated DEC OSF/1 names.

Table 3-1: Supported System Disks

DEC OSF/1 Name	Device Name
`ra`	RA60, RA71, RA72, RA73, RA81, RA82, RA90, RA92
`rz`	RZ24L, RZ25, RZ25L, RZ26, RZ26L, RZ28, RZ35, RZ55, RZ56, RZ57, RZ58, RZ73, RZ74, HSZ10

Note

Refer to Section 5.2.3 for restrictions surrounding the use of the RZ24L and RZ55 disks as system disks.

The system disk contains the `root` file system. The unit number for the system disk must be in the range 0 to 254 for `ra` type devices or in the range 0 to 31 for the other types of devices.

Complete the worksheet in Table 3-2 to identify what disks are in your system's configuration. Use the console command `show device` to determine what drives your system has.

Though the worksheet shows only four devices, you can configure many more devices. See the Software Product Description (SPD) for the number of devices that can be configured on each type of system.

Using your system's hardware documentation and the disk information provided in Appendix D, write in the disk type, the name of that disk, and the size in kB of each partition. Be sure to divide the numbers under the heading "Size" from the appropriate table in Appendix D by 2. Refer to this worksheet when completing the worksheets in the following sections.

If you are installing a new system on a disk, use the `disklabel` command to look at the existing disk partition layout. Invoke the `disklabel` command if your system is already running DEC OSF/1 or invoke `disklabel` from the SYSTEM MANAGEMENT option from the Installation menu.

Enter the `disklabel` command in the following format and replace the variable *n* with the unit number of the disk:

disklabel -r /dev/rrz*n*a

The system displays the existing disk partition layout. If you want to create a new partition table, choose the SYSTEM MANAGEMENT option before starting the installation and use the `disklabel` command to customize partition tables. During an advanced installation, if a customized partition table exists on the system disk, you will be given an option to use either the default partitions or the existing customized partitions. Refer to Section 7.7 for more information about customizing disk partitions.

Table 3-2: Disk Configuration Worksheet

Disk Number	Device Name	Partition	Size (kB)
1	_____	a	_____
		b	_____
		c	_____
		d	_____
		e	_____
		f	_____
		g	_____
		h	_____
2	_____	a	_____
		b	_____
		c	_____
		d	_____
		e	_____
		f	_____
		g	_____
		h	_____
3	_____	a	_____
		b	_____
		c	_____
		d	_____
		e	_____
		f	_____
		g	_____
		h	_____

Table 3-2: (continued)

Disk Number	Device Name	Partition	Size (kB)
4	_____	a	_____
		b	_____
		c	_____
		d	_____
		e	_____
		f	_____
		g	_____
		h	_____

3.2 Planning the Swap Space

Virtual memory is implemented in the DEC OSF/1 operating system by transparently moving pages back and forth between physical memory and swap space. The amount of virtual address space that can be created is limited only by the amount of swap space. This section discusses some of the factors to consider when configuring swap space on your system.

The advanced installation procedure allows you to configure two swap areas: a primary swap partition named `swap1` and an optional swap partition named `swap2`. Additional swap partitions can be configured after installation is complete by using the procedures described in the *System Administration* manual.

During an advanced installation, you are asked to choose which disk partition to use for `swap1`. The default choice is partition `b` of the system disk. The partition chosen must contain at least 131,072 blocks (64 MB). On systems with more than one disk, Digital recommends that you allocate the primary swap partition on the system disk.

An effective strategy to determine how much disk space to set aside for swapping is to compare the aggregate modifiable virtual address space needs of the processes that you plan to run with the size of your system's physical memory. Modifiable virtual address space holds data elements and structures that are modified during process execution, such as heap space, stack space, and data space. If you expect the aggregate need for modifiable virtual address space to be greater than your system's physical memory, consider allocating at least as much swap space as the size of your system's physical memory.

Be prepared to add more swap space later if the system issues warning messages that indicate that swap space is approaching exhaustion. On systems where the balance between modifiable virtual address space usage and available physical memory is more even, somewhat less swap space is required.

Refer to the worksheet in Table 3-2 to identify partitions that are large enough for use as swap partitions. Record the location of the swap space in the following table:

Swap Space	Size in MB	Disk Number	Partition
swap1	_____	_____	_____
swap2	_____	_____	_____

3.3 Planning the Crash Dump Space

Two disks are used when the system produces a crash dump. The first area is used to hold the crash dump until the system is rebooted. This area must be large enough to hold a single crash dump and is referred to as the crash dump partition. The second area is where the `savecore` utility copies the crash dump and a copy of `/vmunix` when the system is rebooted. This area is located in the `/var/adm/crash` directory. The disk partition that contains `/var/adm/crash` must be at least large enough to hold one crash dump and one copy of `/vmunix`, but can be made as large as resources permit if retention of multiple crash dumps is desired.

In the event of a system crash, the kernel writes the contents of physical memory to the crash dump partition. The amount of information written, and hence the size of the crash dump, depends on several factors:

- If the system is configured to produce full dumps as described in the *System Administration* guide, the size of the crash dump will be the same as the size of the system's physical memory.
- If the system is configured to produce partial dumps, the crash dump might be considerably smaller.

The factor that determines the size of a partial crash dump is the amount of physical memory in use at the time of the crash by various kernel data structures that define the state of the system. The more tasks and threads that are active, the more kernel data structures that will be in use, and the larger the resulting partial crash dump.

The crash dump partition must be as large as the size of physical memory on systems configured for full dumps, and can be somewhat smaller on systems configured for partial dumps. The disk partition that contains

/var/adm/crash must be large enough to hold at least one crash dump and one copy of /vmunix. If retention of multiple crash dumps is desired, the required size of this partition can be estimated by multiplying total size required for a single crash dump and a copy of /vmunix by *n*, where *n* is the number of crash dumps that you want to retain. To determine the size and to record the location of the crash dump space, provide the following information:

1. The memory size in MB for your system is _____.
2. You need _____ memory to accommodate your crash dump partition. Refer to Table 3-2 to identify the partition that is large enough for the crash dump space.
3. You need _____ MB minimum disk space in the /var/adm/crash directory.

3.4 Planning the var Area

The var area contains volatile, machine-specific directories and directories such as tmp and adm.

You can allocate the var area either as a file system on its own partition, or as a directory in the /usr file system. Depending on system use, the var area can potentially use large amounts of space in the /usr/var directory. If system use is heavy, you might want to create a separate var area.

If you choose the default allocation, the installation software allocates the var area as the /usr/var directory.

To determine the size of the var area, consider the following:

- Crash dump space
- Error logger
- System accounting
- Size of the /var/adm/ris directory, if your system is a RIS server
- If you are planning to run a dataless environment, you should decide whether you want /var on a separate file system or whether you want to reserve a partition to mount under /var/adm/dms. See *Sharing Software on a Local Area Network* for more information about running a dataless management environment.
- Space required for mail, print, and uucp spooling

Section 3.4.5 describes how these items affect the size of the var area. As you read through each section, complete the worksheet in Table 3-3.

3.4.1 Error Logger and syslog Files

The `var` area requires room to accommodate the log files produced by both `syslog` and the binary error logger. These log files are a record of system events and errors in ASCII text (`syslog`) and binary formats.

The `syslog` utility collects information regarding such system activities as mail, system startup, shutdown, rebooting, root account logins, time daemon, printer subsystem, and `syslog` itself. Summary information on hardware errors is also logged. The amount of data logged is related to system activity and the number of users.

The binary error logger records information on hardware errors and system startup.

If you are creating a new system, estimate your total requirements at about 500 kB per week. There is no limit to how large the `/var/adm/binary.errlog` and the `/var/adm/syslog` files can grow, so they might eventually fill their partition. If you plan to back up or remove these log files once a month, you need to plan your total requirements at about 2 MB.

Enter the amount of space needed for the error logger on the second line of Table 3-3.

3.4.2 System Accounting

The `var/adm` directory in the `var` area contains data files generated by administrative programs such as `acct` and `wtmp`. The data that these programs generate can vary widely from system to system and over time. For example, if you create a `/var/adm/acct` file, it can grow by 50 kB a day for a large system and by 5 kB a day for a workstation.

As a general guideline for system accounting, you should allot 10 kB per day for workstations and 100 kB per day for larger systems. If you back up or remove the system accounting file once a month, you should plan for accounting files that occupy about 300 kB for workstations and 3 MB for large systems. See *System Administration* for more information on the space requirements for system accounting.

Enter the amount of space needed for system accounting on the third line in Table 3-3.

3.4.3 Size of the /var/adm/ris Directory

If you are going to set up your system as a RIS server, you can choose to transfer software subsets from distribution media to the `/var/adm/ris` directory in the `var` area. Anyone with a DEC 2000 series, DEC 3000 series, or a DEC 4000 series processor can then install the software subsets

residing in this directory by using the network. See *Sharing Software on a Local Area Network* for more information on setting up the network kit.

You must reserve enough space in the `/var/adm/ris` directory in the `var` area for the software you want to install. See Appendix B for a description of each software subset and the names of other subsets or kernel configuration file options related to its operation. See the DEC OSF/1 *Release Notes* for the subset sizes.

Fill in the fourth line on the worksheet in Table 3-3 with the amount of space needed for the `/var/adm/ris` directory in the `var` area. If you plan to mount a separate partition on the `/var/adm/ris` directory after the installation, enter a 0 (zero) for item 4 in Table 3-3. (See Section 3.4.5.)

3.4.4 Size of the /var/adm/dms Directory

This section applies only if you are setting up a dataless management environment on a server system.

In a dataless management environment, the dataless server's environment file systems are located in `/var/adm/dms/dmsn.alpha`. Each environment must have at least the DEC OSF/1 mandatory subsets installed as well as other optional software subsets. Space must be reserved for layered products plus an additional 10% for file system administration tasks and file system information. See the *Release Notes* for software subset sizes. For more information about the size requirements of a dataless environment, refer to *Sharing Software on a Local Area Network.* A worksheet in that guide is provided to help you calculate the amount of space required for a single `/var/adm/dms` file system.

Fill in the fifth line on the worksheet in Table 3-3 with the amount of space needed for the `/var/adm/dms` environments in the `var` area. If you plan to mount a separate partition on the `/var/adm/dms` area after the installation, enter a 0 (zero) for item 5 in Table 3-3.

3.4.5 Completing the var Worksheet

Add the values in column 3 of Table 3-3 to determine the space requirements for the `var` area.

Table 3-3: var Worksheet

Item	Obtain Number From ...	Space Required in var
Crash dump space	Section 3.3	_____
Error logger	Section 3.4.1	_____

Table 3-3: (continued)

System accounting	Section 3.4.2	_____
Size of the `/var/adm/ris` directory	Section 3.4.3	_____
Size of the `/var/adm/dms` directory	Section 3.4.4	_____
	Total space required in var	_____

3.5 Planning the /usr File System

The `/usr` directory contains the majority of the operating system files, including libraries, executable programs, and documentation. The directory structure contains directories such as `/usr/sys`, `/usr/adm`, and `/usr/bin`.

During the installation procedure, you allocate the `/usr` file system either by accepting the default partition or by specifying another partition. If you choose the default allocation, the installation software allocates the `g` partition of the system disk.

To determine the size of the `/usr` file system, consider the following:

- Software subsets you plan to install on `/usr`
- Amount of user space needed
- Size of the `var` area if it is on the same partition as `/usr`

Over time, you will probably add files to the `/usr` file system. Because of this, the file system can potentially run out of space. Be sure to allow for free space on the `/usr` file system.

Section 3.5.1 to Section 3.5.3 briefly describe how these items affect the size of the `/usr` file system. As you work through each section, complete the worksheet in Table 3-4.

3.5.1 Software Subsets Within the /usr File System

The `/usr` file system must be large enough to accommodate the software subsets that will reside within it. A software subset is a collection of executable files and data files needed to perform a specific function or to provide a particular class of services; for example, you need the System Accounting Utilities subset to perform system accounting.

Appendix B contains descriptions of the software subsets and a list of other subsets and kernel configuration file options related to each subset. The DEC OSF/1 *Release Notes* contains a table of software subset sizes.

The mandatory subsets are always installed. The optional subsets are not needed for your system to function; you can choose none, some, or all of the optional subsets, depending on your system requirements and available space.

You may want to consider allocating space for other layered products that are available for DEC OSF/1. When planning space requirements `/usr`, allow additional space if you will be adding products in the future. Refer to the specific layered product's *Release Notes* for the exact block size of the application.

Determine which subsets you will install, add their sizes together, and include any additional space that will be required for large applications in the near future. Enter the total on the first line of Table 3-4.

3.5.2 User Space Required

The advanced installation does not provide an area for user files; you need to set up this area after the installation. However, you should consider the amount of space needed for user files when planning your system. If you plan to place the users directory on `/usr`, you should reserve at least 10 MB of disk space for each user on your system. For example, if there are 10 users, you should reserve a minimum of 100 MB of disk space.

If you intend to set quotas on the user area, multiply the quota for each user by the number of users to determine the amount of user space. See the *System Administration* guide for information on disk quotas.

Enter the amount of space needed for the users directory on the second line of Table 3-4.

3.5.3 Size of the var Area

If you plan to place the `var` area on the same partition as `/usr`, you must add the total size of the `var` area from the worksheet in Table 3-3 to the total of `/usr`.

If appropriate for your system, enter the amount of space needed for `/var` on the third line of Table 3-4.

3.5.4 Completing the /usr Worksheet

Add the values in column 3 of Table 3-4 to determine the total space requirements for the `/usr` file system.

Table 3-4: /usr Worksheet

Item	Obtain Number from ...	Space Required in /usr
Software subsets	The DEC OSF/1 *Release Notes*	_____
Size of the user area	Section 3.5.2	_____
Size of the `var` area	Section 3.5.3	_____
	Total space required in /usr	_____

Refer to Table 3-2 to identify partitions that are large enough for the `/usr` file system.

Record the software name, disk number, and partition where you plan to allocate the `/usr` file system in the following table:

Software Name	Disk Number	Partition
_____	_____	_____

3.6 Determining the Disk Partition Layout

After you determine how much space your system needs for each file system, determine whether you can accept the default disk partition layouts. If you want to use a customized disk partition layout, choose the SYSTEM MANAGEMENT option and use the `disklabel` command to modify the disks. The SYSTEM MANAGEMENT option is offered when you start the installation. Refer to Appendix D or the `/etc/disktab` file for information on the default disk partition layout.

If you modify the partition tables for the system disk, The `root`, or `a` partition, must be at least 81,920 blocks (40 MB). If the modified partition does not meet this requirement, the advanced installation requires that you choose the default partition table for the system disk or restart the installation to select a different system disk. Other disks on the system are unaffected.

Enter the values that you determined in the previous sections in Table 3-5. This table will provide you with the complete file system layout and space requirements for your system.

Table 3-5: File System Worksheet

Items	Approximate Size	Device Name	Partition
Root	_____	_____	_____
swap1 (from Section 3.2)	_____	_____	_____
swap2 (from Section 3.2)	_____	_____	_____
Crash dump space (from Section 3.3)	_____	_____	_____
Error logger	_____		
System accounting	_____		
RIS area	_____	_____	
`var` total (from Table 3-3; fill in disk and partition lines if applicable)	_____	(_____)	(_____)
`/usr` total (from Table 3-4)	_____	_____	_____

After completing the worksheet, verify the disk partition layout. If you are installing a system for the first time, refer to Table 3-2 and to Appendix D or the `/etc/disktab` file for the default partition layout for your disk or disks.

Compare the disk partition layout with the total `var` and `/usr` values in Table 3-5. If the space required consumes more than 75 percent of the available disk space, not including the 15 percent of the partition that the file system consumes, consider expanding the partition. After working the math out, choose the SYSTEM MANAGEMENT option when you begin the installation (as described in Chapter 4) and use the `disklabel` command to modify the default partition layout before beginning the installation. See Chapter 7 for more information.

Continue with Chapter 4 to begin the installation procedure.

Booting the System 4

This chapter provides booting instructions for each supported processor type.

Before you install the DEC OSF/1 operating system software, you must prepare the hardware for the installation and then boot the system from the installation media. How you do this depends on which processor you have.

If you are using a CD-ROM optical disc to boot your system, follow the instructions in Appendix A to load the CD–ROM into the disc drive.

If you are booting your system over the network, you are initiating an installation from a remote server. You can also boot a standalone kernel from a remote server to perform system management tasks. To boot over the network, you must be registered as a client on a Remote Installation Services (RIS) server. Refer to *Sharing Software on a Local Area Network* for information about registering your system.

During a boot, the console reserves 2 MB of system memory. The console display at boot time shows 2 MB less than the total configured memory in your system.

4.1 Preparing the Hardware for the Installation

To prepare the hardware for the installation, do the following:

1. If your system is already running you must shut it down and halt the processor. Consult the *System Administration* guide for information.
2. Connect any additional peripheral devices while your system is turned off.
3. Turn on power to the console terminal and all additional peripheral devices; otherwise, they will not be configured by your system.

   If you connect additional peripherals or controllers after the installation, see the *System Administration* guide for instructions on how to reconfigure your system.
4. Turn on power to the processor.

The console subsystem prints various startup and diagnostic messages and

ends with the console mode prompt:

```
>>>
```

The boot command you enter depends on the type of software distribution you are using: CD-ROM or network. The DEC 2000 series, DEC 2100 series, DEC 3000 series, and DEC 4000 series processors provide both CD-ROM and network boot (RIS) capabilities. The DEC 7000 series and DEC 10000 series processors provide only CD-ROM capabilities. The boot command for each distribution kit type is described in this chapter.

Locate your processor in Table 4-1 and follow the instructions for booting your processor in the corresponding section of this guide. Continue the installation procedure in Chapter 5 when you have booted your processor.

Table 4-1: Location of Processor-Specific Boot Instructions

Processor	Section
DEC 2000 Series	Section 4.2
DEC 2100 Series	Section 4.3
DEC 3000 Series	Section 4.4
DEC 4000 Series	Section 4.5
DEC 7000 and 10000 Series	Section 4.6

Note

If you have problems booting your system, refer to the hardware documentation for your particular processor. If the problem is not hardware-related, refer to the *System Administration* guide. This guide provides information about boot options such as booting a generic kernel (`genvmunix`) or booting an alternate custom kernel.

4.2 DEC 2000 Series Processor

The following sections describe how to boot the DEC 2000 processor from a CD-ROM optical disc and from the network.

4.2.1 Firmware Requirements

The minimum required firmware revision for the DEC 2000 series processor is Version 1.4. You must also have the correct firmware for the Adaptec EISA cards on your system. For DEC OSF/1 to run correctly, the Adaptec

AHA1742A and AHA1740A SCSI EISA cards must have firmware with a ROM revision of G.2 or later.

Using the SRM console to determine the correct hardware revision, enter the following command:

```
>>> show config
```

A message similar to the following will be displayed:

```
This 1MB Flash contains VERSION 1.3 DEC 2000 Model 300 AXP console code
```

To determine the Adaptec SCSI EISA card firmware revision, enter the following command:

```
>>> show device
```

The device listing on your screen will contain a line similar to the following:

```
Host  A/7/0 PROC  AHA1742A    G.2
```

Contact your field service representative if you need to obtain updated revisions of the firmware.

4.2.2 EISA Configuration

Before you begin to install DEC OSF/1 you may need to run the EISA Configuration Utility (ECU) if:

- This is a first-time installation of DEC OSF/1
- You have changed the configuration of the machine by adding, removing, or relocating an EISA or ISA option card
- You have upgraded your firmware

Consult your hardware documentation for information on running the ECU.

4.2.3 Console Flag Settings

Before starting the boot procedure, enter the following commands. Each command is echoed by the system when you press Return:

1. Clear the `boot_osflags` variable. This ensures that the correct kernel file boots automatically.

   ```
   >>> set boot_osflags ""
   ```

2. Set the `auto_action` variable to `halt`. This halts the system at the console prompt each time the system is turned on, when the system

crashes, or when you press the Halt button.

```
>>> set auto_action halt
```

3. Set the keyboard variable to match the keyboard type on the system.

   ```
   >>> set keyboard <type>
   ```

   Use the `help set` command to list the available keyboard types.

4.2.4 Booting from the CD-ROM Optical Disc Kit

Place the CD-ROM optical disc into the caddy as described in Appendix A.

Use this procedure to boot the system:

1. Load the CD-ROM optical disc labeled *"DEC OSF/1 3.0 for AXP(tm) Systems"* into the CD-ROM drive.
2. Enter the following command to determine the unit number of the drive for your device:

   ```
   >>> show dev
   ```

   The following information displays about the devices on your system:

```
BOOTDEV      ADDR       DEVTYPE    RM/FX    DEVNAM     REV    NUMBYTES
-------      ----       -------    -----    ------     ---    --------
EZ0A         08-00-2B-38-A1-92
FD0          PC Floppy DISK       RM
SCSI Devices..
DKA200       A/2/0      DISK       FX       RZ25       0700   426.25MB
DKA400       A/4/0      RODISK     RM       RRD43      4.5d   .......
DKA500       A/5/0      DISK       FX       RZ25L      0006   535.65MB
DKA600       A/6/0      DISK       FX       RZ28       435E   2.10GB
HOST         A/7/0      PROC                AHA1742A   G.2
```

   The numbers under BOOTDEV represent the unit number assigned to each drive on your system, where:

   - The letters DK refer to a SCSI disk device
   - The letters MK refer to a SCSI magnetic tape device
   - The third letter (A or B) refers to the SCSI bus designation Refer to the hardware owner's guide for more details.
   - The number refers to the drive number

3. Enter the `boot` command with the following syntax to boot from a CD-ROM. In the display from the `show dev` command entered, the CD-ROM is listed under `DEVNAM` as `RRD43` and under `BOOTDEV` as `DKA400`.

   boot *device*

For example, to boot the system from CD-ROM drive number 4, enter the following command:

```
>>> b dka400
```

You have completed booting your system. Continue the installation procedure with Chapter 5.

4.2.5 Booting from the Network

To boot your system from the network, make sure it is registered as a client on a RIS server. See the *Sharing Software on a Local Area Network* guide for information on registering a client. The client must be on the same subnet as the server.

4.2.5.1 Booting from a DEC OSF/1 Server

When booting from a DEC OSF/1 server, the system uses the `bootp` protocol. Enter the following command to boot your system over the network:

```
>>> boot ez0
```

The installation software displays some system information, the memory and hardware configurations, and then displays the installation menu from which you choose which type of installation you want to perform.

If your initial network boot fails, enter `init` at the console prompt. If you encounter other problems during the RIS install, see the *Sharing Software on a Local Area Network* guide.

You have completed booting your system. Continue the installation procedure with Chapter 5.

4.2.5.2 Booting from an ULTRIX Server

If you are booting from an ULTRIX server, the network uses the `mop` protocol. Enter the following command to boot your system over the network:

```
>>> boot era0
```

The installation software displays some system information, followed by the memory and hardware configurations.

If your initial network boot fails, enter `init` at the console prompt. If you encounter other problems during the RIS installation, refer to *Sharing Software on a Local Area Network.*

You have completed booting your system. Continue the installation procedure with Chapter 5.

4.3 DEC 2100 Series Processor

The following sections describe how to boot the DEC 2100 processor from a CD-ROM optical disc and from the network.

4.3.1 Running the EISA Configuration Utility (ECU) Before Installation

Before installing the DEC OSF/1 Version 3.0 software on a DEC 2100 Server Model A500MP system, you must run the EISA Configuration Utility (ECU) if either of the following conditions is true:

- You are installing the DEC OSF/1 sofware for the first time on your system or you are installing a new version of the DEC OSF/1 software.
- You have changed the configuration of your system by adding, removing, or moving and EISA option card.

See your hardware documentation for complete instructions on how to run the ECU program.

Note

You should always boot the generic kernel and run `doconfig` whenever you change your system configuration by adding, removing, or moving an EISA option card.

4.3.2 Before Starting the Boot Procedure on a DEC 2100

Before starting the boot procedure, complete the following steps:

1. Clear the `boot_osflags` variable. This ensures that the correct kernel file boots automatically.

   ```
   >>> set boot_osflags ""
   ```

2. Set the `auto_action` variable to `halt`. This will halt the system at the console prompt each time the system is turned on, when the system crashes, or when you press the Halt button.

   ```
   >>> set auto_action halt
   ```

4.3.3 Booting from the CD-ROM Optical Disc Kit

If your CD-ROM optical disc is not already in its caddy, follow the instructions in Appendix A.

Follow this procedure to boot the system:

1. Load the CD-ROM optical disc labeled *"DEC OSF/1 3.0 for AXP(tm) Systems"* into the CD-ROM drive.
2. Enter the following command to determine the unit number of the drive for your device:

```
>>> show dev
```

The system displays a device information table similar to the following:

```
dka0.0.0.0.0              DKA0                          RZ28
dkb0.0.0.1.0              DKB0                          RZ28
dkc0.0.0.2.0              DKC0                          RZ26
dkc100.1.0.2.0            DKC100                        RZ26
dkc200.2.0.2.0            DKC200                        RZ26
dkc300.3.0.2.0            DKC300                        RZ26
dke100.1.0.4.0            DKE100                       RRD43
mka500.0.0.0.0            MKA500                        TLZ04
mke0.0.0.4.0              MKE0                          TZ85
ewa0.0.0.6.0              EWA0          08-00-2B-2C-CE-DE
ewb0.0.0.7.0              EWB0          08-00-2B-2C-CE-DF
p_d0.7.0.3.0                                    Bus ID 7
pka0.7.0.0.0              PKA0              SCSI Bus ID 7
pkb0.7.0.1.0              PKB0              SCSI Bus ID 7
pkc0.7.0.2.0              PKC0              SCSI Bus ID 7
pke0.7.0.4.0              PKE0              SCSI Bus ID 7
```

The middle column shows the numbers assigned to each drive, where:

- The letters DK refer to a SCSI disk or CD-ROM device.
- The letters MK refer to a SCSI magnetic tape device.
- The third letter (A, B, C, D, or E) refers to the SCSI or DSA bus designation. Refer to the hardware owner's guide for more details.
- The number refers to the drive number.

3. Enter the `init` command with the following syntax:

```
>>> init
```

4. Enter the `boot` command with the following syntax to boot from a CD-ROM:

boot *device*

For example, to boot the system from CD-ROM drive number 1, enter the following command:

```
>>> boot dke100
```

The system displays output similar to the following:

```
(boot dke100.1.0.4.0)
block 0 of dke100.1.0.4.0 is a valid boot block
reading 16 blocks from dke100.1.0.4.0
bootstrap code read in
base = 1ee000, image_start = 0, image_bytes = 2000
initializing HWRPB at 2000
initializing page table at 1e0000
initializing machine state
setting affinity to the primary CPU
jumping to bootstrap code

OSF boot - Mon Aug 5 15:49:49 EDT 1993
```

4.3.4 Booting from the Network

To boot your system over the network, make sure it is registered as a client on a RIS server. See the *Sharing Software on a Local Area Network* guide for information on registering a client. Note that the client must be on the same subnet as the server.

The `device` parameter is the network device from which you want to boot. The DEC 2100 processor supports two network adapters: `ewa0` and `ewb0`.

Set your device protocols to allow booting from either a DEC OSF/1 server or an ULTRIX server.

4.3.4.1 Booting from a DEC OSF/1 Server

Use the following command syntax to boot your system over the network:

set *device*_**protocols bootp**

For example, if the device you are booting from with the `bootp` protocol is `ewa0`, enter the following commands:

```
>>> set ewa0_protocols bootp
>>> boot ewa0
```

You can override a previously set boot protocol. For example, if your system was previously set to use the `mop` boot protocol, you can overwrite it and use the `bootp` protocol by entering the following command:

```
>>> boot ewa0 -pro bootp
```

The installation software displays some system information, followed by the memory and hardware configurations.

If your initial network boot fails, enter `init` at the console prompt. If you encounter other problems during the RIS install, see the *Sharing Software on a Local Area Network* guide.

You have completed booting your system. Continue the installation procedure with Chapter 5.

4.3.4.2 Booting from an ULTRIX Server

If you are booting from an ULTRIX server, use the following command syntax:

set *device*_**protocols mop**

For example, if the device you are booting from with the `mop` protocol is `ewa0`, enter the following commands:

```
>>> set ewa0_protocols mop
>>> boot ewa0
```

If your initial network boot fails, enter `init` at the console prompt. If you encounter other problems during the RIS install, see the *Sharing Software on a Local Area Network* guide.

The installation software displays some system information, followed by the memory and hardware configurations.

You have completed booting your system. Continue the installation procedure with Chapter 5.

4.3.5 Prestoserve Option

These instructions apply to DEC 2100 systems equipped with the Prestoserve option.

4.3.5.1 Firmware Requirements

The minimum firmware revision is V3.6. To determine which revision is on your system, enter the following command:

```
>>> show conf
```

This will display a line similar o the following:

```
DEC 2100 AXP (tm) console V3.6........
```

4.3.5.2 The prcache Command

The DEC 2100 system console provides the `prcache` command to support the Prestoserve option (NVRAM) see your hardware documentation for a description of this command.

You have completed booting your system. Continue the installation procedure with Chapter 5.

4.4 DEC 3000 Series Processor

The following sections describe how to boot the DEC 3000 series processor from a CD-ROM optical disc and from the network.

Before starting the boot procedure, enter the following commands. Each command is echoed by the system when you press Return:

1. Clear the `boot_osflags` variable. This ensures that the correct kernel file boots automatically.

   ```
   >>> set boot_osflags ""
   ```

2. Set the `auto_action` variable to `halt`. This halts the system at the console prompt each time the system is turned on, when the system crashes, or when you press the Halt button.

   ```
   >>> set auto_action halt
   ```

3. Set the `boot_reset` variable to `on`. This ensures that all devices are initialized prior to booting.

   ```
   >>> set boot_reset on
   ```

4. Set the `scsi_reset` variable to `4`. This ensures that all devices have adequate time to initialize during the boot sequence.

   ```
   >>> set scsi_reset 4
   ```

4.4.1 Booting from the CD-ROM Optical Disc Kit

Place the CD-ROM optical disc into the caddy as described in Appendix A.

Use the following procedure to boot the system:

1. Load the CD-ROM optical disc labeled *"DEC OSF/1 3.0 for AXP(tm) Systems"* into the CD-ROM drive.
2. Enter the following command to determine the unit number of the drive for your device:

   ```
   >>> show dev
   ```

   A display appears showing information about the devices on your system. For example:

```
BOOTDEV     ADDR   DEVTYPE NUMBYTES RM/FX WP  DEVNAM REV
-------     ----   ------- -------- ----- --  ------ ---
DKA0        A/0/0  DISK    426.25MB  FX       RZ25   0700
DKA200      A/2/0  DISK    426.25MB  FX       RZ25   0700
DKA400      A/4/0  DISK      .....   RM   WP  RRD42  4.3d
MKA500      A/5/0  TAPE              RM       TZK10  01B4
MKB500      B/5/0  TAPE              RM       TLZ04
```

The numbers under BOOTDEV represent the unit number assigned to each drive on your system, where:

- The letters DK refer to a SCSI disk device
- The letters MK refer to a SCSI magnetic tape device
- The third letter (A or B) refers to the SCSI bus designation (refer to the hardware owner's guide for more details)
- The number refers to the drive number

3. Enter the `boot` command with the following syntax to boot from a CD-ROM. In the display from the `show dev` command entered, the CD-ROM is listed under `DEVNAM` as `RRD42` and under `BOOTDEV` as `DKA400`.

   boot *device*

   For example, to boot the system from CD-ROM drive number 4, enter the following command:

   ```
   >>> b dka400
   ```

You have completed booting your system. Continue the installation procedure with Chapter 5.

4.4.2 Booting from the Network

To boot your system from the network, make sure it is registered as a client on a RIS server. See the *Sharing Software on a Local Area Network* guide for information on registering a client. The client must be on the same subnet as the server.

4.4.2.1 Booting from a DEC OSF/1 Server

When booting from a DEC OSF/1 server, the system uses the `bootp` protocol. Enter the following command to boot your system over the network:

```
>>> boot ez0
```

The installation software displays some system information, followed by the memory and hardware configurations.

If your initial network boot fails, enter `init` at the console prompt. If you encounter other problems during the RIS install, refer to *Sharing Software on a Local Area Network*.

You have completed booting your system. Continue the installation procedure with Chapter 5.

4.4.2.2 Booting from an ULTRIX Server

If you are booting from an ULTRIX server, the network uses the `mop` protocol. Enter the following command to boot your system over the network:

```
>>> boot esa0
```

The installation software displays some system information, followed by the memory and hardware configurations.

If your initial network boot fails, enter `init` at the console prompt. If you encounter other problems during the RIS install, see the *Sharing Software on a Local Area Network* guide.

You have completed booting your system. Continue the installation procedure with Chapter 5.

4.4.3 Booting from the SCSI TURBOchannel Option Card

To boot from the dual SCSI TURBOchannel option card (PMAZB or PMAZC), complete the following steps:

1. Determine which controllers and devices are configured on your system by entering the following command at the console prompt:

   ```
   >>> show conf
   ```

   Your system will display output similar to the following (the output will differ depending on your system configuration):

   ```
   DEC 3000 - M500
   Digital Equipment Corporation
        VPP PAL X5.37-82000101/OSF PAL X1.28-82000201 -
        Built on 15-JUL-1994 13:39:58.02

   TCINFO     DEVNAM    DEVSTAT
   ------     --------  --------
              CPU       OK KN15-AA -V2.0-S1F4-I039-sV1.0-DECchip 21064
   P3.0
              ASIC      OK
              MEM       OK
   8
              CXT       OK
   7
              NVR       OK
              SCC       OK
               NI       OK
              ISDN      OK
   6
              SCSI      OK
   3-PMAF-AA  TC3
   2-PMAZ-AA  TC2
   1-PMAZB-AA TC1
   0-PMTNV-AA TC0
   ```

The numbers under the TCINFO column (and the entries in the DEVNAM column) represent the unit number assigned to the PMAZB or PMAZC option card.

2. Determine the number of your boot device by entering a command with the following syntax:

   t tc *slot_number* **cnfg**

   For example, to determine the device number of a disk on a PMAZB option card, enter the following command:

   ```
   >> t tc1 cnfg
   ```

   The system displays a table similar to the following:

   ```
   DEC        PMAZB-AA  V1.0         (Dual SCSI [53C96])
   BOOTDEV      ADDR    DEVTYPE NUMBYTES  RM/FX WP  DEVNAM   REV
   -------      ----    ------- --------  ----- --  ------   ---
   DKA200       A/3/0   DISK      426MB   FX        RZ25     0700
   (rz200A)
   DKA400       A/4/0   RODISK    409MB   RM    WP  RRD42    4.3d
   (rz400A)
   ..HostID..   A/7     INITR

   ..HostID..   B/7     INITR
   ```

To boot from the PMAZB (or PMAZC) option card, enter the `boot` command with the following syntax:

boot *"slot_number/device_number"*

For example, to boot from disk number 4 on the PMAZB option card located in slot 1, enter the following command:

```
>>> b "1/dka400"
```

4.4.4 Booting from an FDDI Network Interface

Booting over an FDDI network interface is supported for DEFTA and CRE-DEFTA devices. Consult the *Release Notes* for information on supported devices and firmware.

To boot from an FDDI network interface device, find the device names as described in Section 4.4.3. For example, a DEFTA device appears as "PMAF-FA" when you use the `show conf` command. Identify the slot number and use one of the following commands, depending on the type of server that is required:

1. To boot from a DEC OSF/1 server using the `bootp` protocol, enter the

following command:

```
>>> b "1/ez0"
```

2. To boot from an ULTRIX server using the `mop` protocol, enter the following command:

```
>>> b "1/esa0"
```

You have completed booting your system. Continue the installation procedure with Chapter 5.

4.5 DEC 4000 Series Processor

The following sections describe how to boot the DEC 4000 processor from a CD-ROM optical disc and from the network.

Before starting the boot procedure, complete the following steps:

1. Clear the `boot_osflags` variable. This ensures that the correct kernel file boots automatically.

```
>>> set boot_osflags ""
```

2. Set the `auto_action` variable to `halt`. This halts the system at the console prompt each time the system is turned on, when the system crashes, or when you press the Halt button.

```
>>> set auto_action halt
```

4.5.1 Booting from the CD-ROM Optical Disc Kit

If your CD-ROM optical disc is not already in its caddy, follow the instructions in Appendix A.

Use the following procedure to boot the system:

1. Load the CD-ROM optical disc labeled *"DEC OSF/1 3.0 for AXP(tm) Systems"* into the CD-ROM drive.
2. Enter the following command to determine the unit number of the drive for your device:

```
>>> show dev
```

The system displays a device information table similar to the following:

```
dka0.0.0.0.0              DKA0                    RZ73
dkb0.0.0.1.0              DKB0                    RZ73
dkc0.0.0.2.0              DKC0                    RZ26
dkc100.1.0.2.0            DKC100                  RZ26
dkc200.2.0.2.0            DKC200                  RZ26
dkc300.3.0.2.0            DKC300                  RZ26
dke100.1.0.4.0            DKE100                 RRD42
mka500.0.0.0.0            MKA500                  TLZ04
```

```
mke0.0.0.4.0              MKE0                          TZ85
eza0.0.0.6.0              EZA0          08-00-2B-2C-CE-DE
ezb0.0.0.7.0              EZB0          08-00-2B-2C-CE-DF
p_d0.7.0.3.0                                    Bus ID 7
pka0.7.0.0.0              PKA0              SCSI Bus ID 7
pkb0.7.0.1.0              PKB0              SCSI Bus ID 7
pkc0.7.0.2.0              PKC0              SCSI Bus ID 7
pke0.7.0.4.0              PKE0              SCSI Bus ID 7
```

The middle column shows the numbers assigned to each drive, where:

- The letters DK refer to a SCSI disk or CD-ROM device
- The letters MK refer to a SCSI magnetic tape device
- The third letter (A, B, C, D, or E) refers to the SCSI or DSA bus designation (refer to the hardware owner's guide for more details)
- The number refers to the drive number

3. Enter the `init` command with the following syntax:

```
>>> init
```

4. Enter the `boot` command with the following syntax to boot from a CD-ROM:

   boot *device*

   For example, to boot the system from CD-ROM drive number 1, enter the following command:

```
>>> boot dke100
```

   The system displays output similar to the following:

```
(boot dke100.1.0.4.0)
block 0 of dke100.1.0.4.0 is a valid boot block
reading 16 blocks from dke100.1.0.4.0
bootstrap code read in
base = 1ee000, image_start = 0, image_bytes = 2000
initializing HWRPB at 2000
initializing page table at 1e0000
initializing machine state
setting affinity to the primary CPU
jumping to bootstrap code

OSF boot - Mon Aug 5 15:49:49 EDT 1993
```

4.5.2 Booting from the Network

To boot your system over the network, make sure it is registered as a client on a RIS server. Refer to *Sharing Software on a Local Area Network* for information on registering a client. The client must be on the same subnet as the server.

The `device` parameter is the network device from which you want to boot. The DEC 4000 processor supports two network adapters: `eza0` and `ezb0`.

Set your device protocols to allow booting from either a DEC OSF/1 server or an ULTRIX server.

4.5.2.1 Booting from a DEC OSF/1 Server

Use the following command syntax to boot your system over the network:

set *device*_**protocols bootp**

For example, if the device you are booting from with the `bootp` protocol is `eza0`, enter the following commands:

```
>>> set eza0_protocols bootp
>>> boot eza0
```

You can override a previously set boot protocol. For example, if your system was previously set to use the `mop` boot protocol, you can overwrite it and use the `bootp` protocol by entering the following command:

```
>>> boot eza0 -pro bootp
```

The installation software displays some system information, followed by the memory and hardware configurations.

If your initial network boot fails, enter `init` at the console prompt. If you encounter other problems during the RIS installation, refer to *Sharing Software on a Local Area Network.*

You have completed booting your system. Continue the installation procedure with Chapter 5.

4.5.2.2 Booting from an ULTRIX Server

If you are booting from an ULTRIX server, use the following command syntax:

set *device*_**protocols mop**

For example, if the device you are booting from with the `mop` protocol is `eza0`, enter the following commands:

```
>>> set eza0_protocols mop
>>> boot eza0
```

If your initial network boot fails, enter `init` at the console prompt. If you encounter other problems during the RIS installation, refer to *Sharing Software on a Local Area Network.*

The installation software displays some system information, followed by the memory and hardware configurations.

You have completed booting your system. Continue the installation procedure with Chapter 5.

4.5.3 Prestoserve Option

The following instructions apply to DEC 4000 systems equipped with the Prestoserve option.

4.5.3.1 Firmware Requirements

The minimum firmware revision is Version 3.3. To determine which revision is on your system, enter the following command:

```
>>> show conf
```

A display similar to the following will appear:

```
DEC 4000 AXP (tm) console V3.3.........
```

4.5.3.2 The prcache Command

The DEC 4000 system console provides the `prcache` command to support the Prestoserve option (NVRAM). See the hardware documentation for a description of this command.

You have completed booting your system. Continue the installation procedure with Chapter 5.

4.6 DEC 7000 and DEC 10000 Series Processors

The following sections describe how to boot the DEC 7000 processor and DEC 10000 processor from a CD-ROM optical disc.

Before starting the boot procedure, complete the following steps:

1. Clear the `boot_osflags` variable. This ensures that the correct kernel file boots automatically.

   ```
   >>> set boot_osflags ""
   ```

2. Set the `auto_action` variable to `halt`. This halts the system at the console prompt each time the system is turned on, when the system crashes, or when you press the Halt button.

   ```
   >>> set auto_action halt
   ```

3. Set the `boot_reset` variable to `on`. This must be done if you need to reboot the generic kernel (`genvmunix`) at any time to reconfigure your system for additional peripherals.

```
>>> set boot_reset on
```

4.6.1 Booting from the CD-ROM Optical Disc Kit

If your CD-ROM optical disc is not already in its caddy, follow the instructions in Appendix A.

Use the following procedure to boot the system:

1. Load the CD-ROM optical disc labeled *"DEC OSF/1 3.0 for AXP(tm) Systems"* into the CD-ROM drive.
2. Enter the following command to determine the unit number of the drive for your device:

   ```
   >>> show dev
   ```

   A display appears showing information about the devices on your system. For example:

   ```
   dka0.0.0.5.0        DKA0                              RZ73
   dkb4.4.1.14.0       DKB400                            RRD43
   ```

   The numbers in the middle column are the unit numbers assigned to each drive on your system, where:

   - The letters DK refer to a SCSI CD-ROM or disk device
   - The third letter (A, B, C, D, or E) refers to the SCSI bus designation (refer to the hardware owner's guide for more details)
   - The numbers refer to the drive number

3. Enter the `boot` command with the following syntax to boot from a CD-ROM:

   boot *device-number*

   For example, to boot the system from CD-ROM drive number 4, enter:

   ```
   >>> boot dkb400
   ```

   The system displays output similar to the following:

   ```
   Initializing...

   F  E  D  C  B  A  9  8  7  6  5  4  3  2  1  0  NODE #
                      A  M  M  .  .  .  .  .  P  TYP
                      o  +  +  .  .  .  .  .  +  ST1
                      .  .  .  .  .  .  .  .  B  BPD
                      o  +  +  .  .  .  .  .  +  ST2
                      .  .  .  .  .  .  .  .  B  BPD
                      +  +  +  .  .  .  .  .  +  ST3
                      .  .  .  .  .  .  .  .  B  BPD

         +  .  +  .  +  .  +  .  .  +  .  .  .  .     C0 XMI +
         .  .  .  .  .  .  .  .  .  .  .  .  .  .     C1
   ```

```
    . .   .  .  .  .  . .  .  .  .  .  .  .     C2
    .  .  .  .  .  .  . .  .  .  .  .  .  .     C3

                          .  A0  B0  . . . . .    LV
                          . 256  64  . . . . .    320Mb

Firmware Rev = V2.3  SROM Rev = V2.0  SYS SN = GA12345678

Booting...
Connecting to boot device dkb400
   •
   •
   •
```

You have completed booting your system. Continue the installation procedure with Chapter 5.

4.6.2 Booting from the Network

Booting from the network is not supported for the DEC 7000 and DEC 10000 processors.

Performing the Full Installation 5

This chapter describes how to perform both basic and advanced full installations. Neither the basic nor advanced installation will preserve system customizations. Whether you decide to do a basic or an advanced installation, you need to complete the tasks described in Section 5.1 through Section 5.3. Up to that point, the basic and advanced installation follow similar paths by requiring you to specify a system disk and reboot the system. After Section 5.3, the installation procedures diverge. Review Chapter 1 to understand what is offered with each type of installation.

If you intend to perform the advanced installation, and want to select your own disk partitions, review Chapter 3 to verify that you have enough disk space and that the disk partitions meet your needs. Refer to Table 3-2 and Table 3-5 for this information. See Appendix F for a sample basic installation log file and Appendix G for a sample advanced installation log file.

Throughout the installation procedure you are prompted for information about the installation. Some prompts have a default response, which is shown by brackets surrounding a letter, for example, `[y]`. Press the Return key to accept the default response or enter the letter that corresponds to the option you want. If there is no default response, enter the appropriate option number or letter at the prompt and press the Return key.

Note

The following messages are displayed when rebooting the kernel during the installation. The following messages can be ignored:

```
vm_swap_init: warning /sbin/swapdefault swap device not found
vm_swap_init: in swap over commitment mode
```

5.1 Choosing the Type of Installation

To begin an installation you must have shut down and booted your processor as described in Chapter 4.

After you decided whether you want to perform a basic or advanced installation, the first step of the procedure is to specify which type of installation you want to perform. After your system boots, it displays brief

installation information and a menu similar to the following:

```
***  STANDALONE SYSTEM ENVIRONMENT ***
  Select the BASIC option to install the mandatory
  software subsets for your system configuration.
  Select the ADVANCED option to display optional
  software subsets from a menu and/or customize
  system disks and partitions.
  Select the SYSTEM MANAGEMENT option to customize disk
  partitions on the system disk.
Select one of the following options:

        1) BASIC Installation
        2) ADVANCED Installation
        3) SYSTEM MANAGEMENT

Enter your choice:
```

Enter the option number of the installation you want and press Return.

If you chose the SYSTEM MANAGEMENT option, refer to Chapter 7 for more information.

5.2 Selecting the System Disk for the root Partition

The following sections provide information you may need to consider when choosing your system disk.

5.2.1 Disks Used on ULTRIX Systems

Read this section if you intend to use a disk that was previously used on a system running ULTRIX.

During the installation the following message might appear:

```
rzn: using ULTRIX partition info found on disk.
```

In the display, *n* in the string `rzn` would be replaced by the SCSI drive identifier.

You can ignore this message. The message is informational and notes whether the disk being targeted has ULTRIX partition information.

5.2.2 Disk Labels on Existing System Disks

The disk selected to be the system disk always has a new disk label written to it, regardless of whether one already exists or not. This ensures that a valid bootstrap exists on the disk. Without one, the disk is not bootable.

Before writing a new disk label, the disk is checked for a pre-existing disk label. If none is found (typical for a never before used disk), a disk label is

written using the default partition information. If a disk label is found, several different scenarios can occur:

- During a basic installation, the default partition information is used and it does not matter if a disk label already exists or contains partition information different from the default partition information.
- During an advanced installation, if no disk label exists, a disk label containing the default partition information is used. If a disk label does exist, its partition information is compared to the default partition information. If they differ, the installer can choose one or the other.

If an existing disk label is selected, it is saved and rewritten to the disk. The new disk label is identical to the previous disk label. If the default disk label is selected, a disk label containing the default partition information is used. If it is determined that the existing disk label had partition information that matched the defaults, a new disk label which contains the default partition information is used.

5.2.2.1 Preserving Data on an Existing System Disk

During an advanced installation, you can choose the partitions on which `root`, `swap`, `usr`, and `var` will be located. If the partitions that contain data to be preserved are chosen during the installation for `root`, `swap`, `usr`, or `var`, the data will be lost. Selecting a partition that overlaps the partition(s) containing the data to be preserved has the same effect. Also, modifying the partition information in the disk label in such a way that the partition(s) containing data have their size and/or offset modified will cause the data to be lost. However, if the partitions containing the data are undisturbed, the contents of them should be recoverable.

Assuming that the partition(s) to be preserved were undisturbed during the advanced installation, the partitions can be used on the newly installed system. If the partition contained a file system, it should be capable of being mounted and accessed. However, unless the installation used the custom partition information that existed on the disk prior to the installation, the disk label may not correctly show the existence of the pre-existing file systems. In situations where the disk label used had the default partition information, the `fstype` field for all partitions is reset to `unused`. Only those partitions selected during the installation will have values different from `unused`. To avoid the confusion that the inaccurate disk label may create, use the following command to edit the disk label and modify the `fstype` field:

```
# disklabel -e
```

You might also need to modify the `fsize`, `bsize`, and `cpg` fields for the partition(s). These fields vary depending on the type of file system built on the partition. If you have a copy of the disk label that existed before the installation, you can determine the value of the fields from that label.

5.2.3 Disk Size Restrictions

Disks that do not have partitions large enough to hold the root and `/usr` file systems are marked with an asterisk next to the entry under the `Software Name` header in the system disk table. This table is explained in Section 5.2.4. As an example, RZ55 and RZ24L disks have `a` partitions large enough to contain the root file system, but neither disk has a `g` (or other) partition large enough for the `/usr` file system. Neither disk type is able to hold all file systems and another disk is required.

This is not a problem during advanced installations because you have the opportunity to select different disks and partitions. If you choose to do an advanced installation, you can, for example, use RZ55 and RZ24L disks as required and allocate `/usr` (and other) file systems to other disks and disk partitions on your system.

The basic installation uses only default partitions and puts all file systems on a single system disk. Therefore, disk types such as the RZ55 and RZ24L cannot be used for a basic installation.

If you are doing a basic installation, and you try to install on a disk that is too small to hold the root partition, you will see a message similar to the following:

```
You selected RZ55, device number 10. This device is not
supported for BASIC installations.

Select one of the following courses of action:

        1) Perform ADVANCED installation to rz10
        2) Select another drive
        3) Exit the Installation

Enter your choice:
```

If you select option 1, you can use the advanced installation procedure to allocate partitions on other disks for the `/usr` and other file systems. Review Chapter 1 and read Chapter 3 before you proceed with the advanced installation.

Option 2 lets you choose a different disk. You must choose a disk large enough to contain root, swap, and `/usr` to continue the basic install or the same message is repeated. If you have another disk, and you are certain that it has a partition that is large enough to hold the root, swap, and `/usr`, you can choose this option and proceed with the installation. Consult Appendix D and the *Release Notes* to ensure that the disk you choose has enough space.

If you need to review the disks available on your system and do some disk planning, select option 3 to exit the installation at this time. Begin the installation again when you have collected the information that you need.

5.2.4 System Disk Table

The installation procedure next requires that you specify your system disk. The system disk will contain the root file system.

The installation procedure displays a table that lists the following information:

- Selection number associated with each possible system disk
- Device name for each disk
- Software name for each disk
- Device number of each disk
- Controller name associated with each disk
- Controller number associated with each disk

For example, the following table might be displayed if you are installing a DEC 3000 series processor. This table lists the disks available for your processor. Enter the selection number of the disk where you want to locate the root file system.

```
*** SYSTEM DISK SELECTION ***

The DEC OSF/1 Installation Guide explains the following table
of system disk drives.  Select one of the disks in the table
to contain the root file system:

SYSTEM DISK TABLE

Selection   Device     Software    Device       Controller   Controller
            Name        Name       Number       Name         Number
-------------------------------------------------------------------------
    1       RZ26L        rz0          0          SCSI           0
    2       RZ26         rz3          3          SCSI           0
    3       RZ58         rz8          8          SCSI           1
-------------------------------------------------------------------------

Enter your choice: 3
```

After you enter your selection number, you are asked to make sure the disk drive is on line and write enabled, and to confirm your choice.

```
You selected RZ58, device number 8. Make sure this disk drive
is online and write-enabled (if applicable to your disk drive),
then confirm your choice.
Use RZ58, rz8, for your system disk? (y/n) []: y
```

If you decide not to use the device you selected, enter n at the prompt. The system redisplays the table and you can reenter your choice.

5.2.5 Selecting File System Type for root

This section applies only if you chose the advanced installation.

After you select the disk to be used for your system disk, you are asked to choose between the UNIX File System (UFS) or the POLYCENTER Advanced File System (AdvFS) as the file system type for the `root` file system. You also have this option for the `/usr` and `/var` file systems later on in the installation.

AdvFS is a log-based, local file system that addresses the needs of large scale commercial storage systems. AdvFS provides rapid rebooting, data integrity protection, and enhanced file system performance.

Refer to the *System Administration* guide or the *POLYCENTER Advanced File System Utilities Technical Summary* for more information about AdvFS.

UFS has a more rigid hierarchy than AdvFS. In a UFS file system, each disk (or disk partition) contains one separate file system. The UFS file system is characterized by a hierarchical structure, the ability to create and delete files, dynamic growth of files, the protection of file data, and the treatment of peripheral devices. Refer to the *System Administration* guide for more information about UFS.

The following message allows you to select either AdvFS or UFS as the file system type for `root`:

```
You can select to use the UNIX File System (ufs) or the Advanced
File System (advfs) for the root file system.  See the Installation
Guide for further information.

Select the file system type for the root file system (advfs/ufs)
[ufs]: advfs
```

After you select the file system type for `root`, system disk initialization begins, and you will see output similar to the following:

```
Initializing the system disk RZ58, rz8...
        Working....Tue Jul 12 21:20:49 GMT 1994
        Working....Tue Jul 12 21:22:52 GMT 1994
```

5.2.6 ULTRIX Partition Tables

This section applies only if you chose the advanced installation. If the disk you choose to contain the root file system was previously used on an ULTRIX system, it will be formatted with ULTRIX partition tables. You will

see a message similar to the following:

```
ULTRIX compatible partition data found.
This data may be different than the standard
partition layout information in /etc/disktab.

ULTRIX partition table layout is:
partition     bottom        top        size     overlap
    a              0      40959       40960     c,h
    b          40960     163839      122880     c
    c              0     832526      832527     a,b,d,e,f,g,h
    d         163840     386735      222896     c,g
    e         386736     609631      222896     c,g
    f         609632     832526      222895     c,g
    g         163840     832526      668687     c,d,e,f
    h              0          0           0     a,c

Use the ULTRIX-style partition data? [y]:
```

If enter **y** to use the ULTRIX layout, a DEC OSF/1 disk label will be created for the disk. This label will correspond to the existing ULTRIX partition table. If you enter **n**, the default partitions for DEC OSF/1 will be created.

5.2.7 Selecting Disk Partitions

If you chose the advanced installation and you already have nonstandard disk partitions on the system disk, you are asked to choose either your nonstandard partitions or the system's default partitions.

Note

You will not see this information unless the existing disk label is different from the default disk label. Refer to Section 5.2.2 for more information about disk labels on system disks.

If you have carefully planned your partition layout and you want to keep the partitions you have on the disk, choose the existing partition table. For example:

```
Select one of the following partition tables to be displayed
for the system disk rz0 RZ26:

     1 ) Default Disk Label
     2 ) Existing Disk Label

Enter your choice: 1
The following table shows the default disk partitions.

partition      start     size      end    overlap
-------------------------------------------------------------------------
    a  ----        0    131072    131072  c
    b  ----   131072    262144    393216  c
    c  ----        0   2050860   2050860  a, b, d, e, f, g, h
    d  ----   393216    552548    945764  c, g
    e  ----   945764    552548   1498312  c, g, h
    f  ----  1498312    552548   2050860  c, h
    g  ----   393216    819200   1212416  c, d, e
    h  ----  1212416    838444   2050860  c, e, f
-------------------------------------------------------------------------
Are these the partitions you want? (y/n) [y]:
```

Depending on your choice, the system displays either the default partition table or the existing partition table and asks you to confirm your choice. Enter `y` at the prompt to use the partition table that is displayed or enter `n` at the prompt to be able to display the default or existing disk label.

After you enter and confirm your choice, the system displays a message that it is initializing the system disk. Your output will be similar to the following:

```
Working....Tue Jul 12 21:20:49 GMT 1994
Working....Tue Jul 12 21:22:48 GMT 1994
Working....Tue Jul 12 21:24:30 GMT 1994
```

5.3 Rebooting the System

After restoring the root file system to the `a` partition, the installation procedure displays the boot command that you must enter at the console prompt to reboot your system. As shown in the following example, the boot command sequence is provided by the installation procedure for a DEC 3000 processor with the root file system on the disk, rz8. The example also shows a remote installation (using Remote Installation Services [RIS]), so the name of the remote server (ds9) is displayed.

```
*** BOOTSTRAP COMMAND SEQUENCE ***

Distribution source is remote server ds9
The system disk has been initialized.

Issue the following console commands to set your default bootpath
variable and to boot your system disk to multiuser:

        >>> set boot_osflags A
        >>> set bootdef_dev "DKB0"
        >>> boot
```

At the console prompt (>>>), enter the boot command sequence exactly as shown. Write these commands here in case you need them again:

- >>>
- >>>
- >>>

The system displays informational messages, the memory and hardware configurations, and a message saying the DEC OSF/1 installation is continuing.

Note

The console reserves 2 MB of memory. Therefore, the console display at boot time shows 2 MB less than the total configured memory.

At this point, the basic and advanced installation procedures diverge. If you selected the advanced installation, continue with Section 5.4.

If you selected the basic installation, the system displays a message telling you the location of the `/usr` file system and the swap space. For example:

```
*****  CREATING DEFAULT FILE SYSTEMS

     The default location for the /usr file system is rz8g
     The default location for the var area is rz8g (in /usr)
     The default location for the swap space is rz8b
     The default filesystem type for /usr is ufs (UNIX File System)

Making the new file system for /usr on rrz8g RZ26
        Working....Tue Jul 12 17:45:35 GMT 1994
```

Refer to Section 5.5 to continue the basic installation procedure.

5.4 Allocating File Systems

The advanced installation procedure continues as follows.

The system disk you chose contains the root file system on partition `a`. A message is displayed telling you the default location for the `/usr` file system and swap space and you are asked if you want to use these defaults. To accept the defaults, enter `y` at the prompt. For example:

```
*****   SELECT FILE SYSTEMS

     The default location for the /usr file system is rz8g
     The default location for the var area is rz8g (in /usr)
     The default location for the swap space is rz8b
     The default filesystem type for /usr is ufs (UNIX File System)
Would you like to use these defaults? (y/n): y

Making the new file system for /usr on rrz8g RZ26
        Working....Tue Jul 12 17:45:35 GMT 1994
```

If you entered **y** to accept the defaults, continue with Section 5.5.

If you do not want to accept the defaults, enter **n** at the prompt and continue with Section 5.4.1.

5.4.1 Allocating the /usr File System

If you chose not to use the default file system layout, the system displays a table similar to the one shown in the following example. This table lists the disks connected to your processor. Enter the selection number of the disk on which you want to allocate the `/usr` file system. Refer to the file system worksheet, Table 3-5, for the disk name.

```
***             Allocate the /usr file system
You can allocate the /usr file system to one of the disks listed in
the table below.  See the DEC OSF/1 Installation Guide for an
explanation of this table:
/usr file system ALLOCATION TABLE
Selection   Device     Software     Device       Controller Controller
            Name       Name       Number       Name         Number
-------------------------------------------------------------------
    1       RZ26L       rz0          0          SCSI           0
    2       RZ26        rz3          3          SCSI           0
    3       RZ58        rz8          8          SCSI           1
-------------------------------------------------------------------
Enter your choice: 3
You selected RZ58, device number 8.  Make sure this disk is
online and write-enabled (if applicable), then confirm your choice.
Use RZ58, rz8 for /usr file system? (y/n) []: y
```

After you confirm your choice, you are asked to choose the partition on which you want to allocate the `/usr` file system. You are also asked to choose between UFS or AdvFS as the file system type for the `/usr` file system.

The following example shows partition and file system type selection for `/usr`:

```
Select the rz8 partition on which the /usr file system
will be mounted:

partition          start     size      end     overlap
-----------------------------------------------------------------------
    b     ----     131072    262144    393216
    d     ----     393216    768281   1161497     g
    e     ----    1161497    768282   1929779     g, h
    f     ----    1929779    768282   2698061     h
    g     ----     393216    819200   1212416     d, e
    h     ----    1212416   1485645   2698061     e, f
-----------------------------------------------------------------------

Enter the letter specifying which partition to use: h

Use rz8 partition 'h' for the /usr file system (y/n) []? y

You can select to use the UNIX File System (ufs) or the Advanced
File System (advfs) for the /usr file system.  See the DEC OSF/1
Installation Guide for further information.

Select the file system type for the /usr file system
(advfs/ufs) [ufs]: advfs
```

After you confirm your choice of which disk partition you want to use for `/usr` and enter the file system type for `/usr`, the system displays a message similar to the following:

```
Making the new file system for /usr on /dev/rrz8h RZ58
```

5.4.2 Allocating the swap Space

You must select the disk on which you want to allocate the swap1 space. The installation procedure displays a table similar to the one shown in the following example:

```
  ***              Allocate the SWAP1 space

You can allocate the swap1 space to one of the disks listed in the
table below.  See the DEC OSF/1 Installation Guide for an
explanation of this table:

swap1 space ALLOCATION TABLE

Selection   Device     Software     Device       Controller   Controller
            Name        Name        Number       Name         Number
-------------------------------------------------------------------------
    1       RZ26L        rz0          0          SCSI           0
    2       RZ26         rz3          3          SCSI           0
    3       RZ58         rz8          8          SCSI           1
-------------------------------------------------------------------------

Enter your choice: 2

You selected RZ26, device number 3.  Make sure this disk is
online and write-enabled (if applicable), then confirm your choice.

Use RZ26, rz3 for swap1 space? (y/n) []: y
```

After you confirm your choice, you are asked to choose the partition on which you want to allocate the swap1 space. Only the available partitions are listed in the table.

```
Select the rz3 partition on which the swap1 space
will be mounted:

partition          start      size       end      overlap
-------------------------------------------------------------------------
    a      ----          0    131072     131072     c
    b      ----     131072    262144     393216     c
    c      ----          0   2050860    2050860     a, b, d, e, f, g, h
    d      ----     393216    552548     945764     c, g
    e      ----     945764    552548    1498312     c, g, h
    f      ----    1498312    552548    2050860     c, h
    g      ----     393216    819200    1212416     c, d, e
    h      ----    1212416    838444    2050860     c, e, f
-------------------------------------------------------------------------

Enter the letter specifying which partition to use: e

Use rz3 partition 'e' for the swap1 space (y/n) []? y
```

After you confirm your choice, the system asks if you want to allocate a second swap space. If you do not want to allocate a second swap space, enter n and continue with Section 5.4.3.

If you want to allocate a second swap space, enter y at the prompt. The system displays a table similar to the one shown in the following example.

Choose the disk on which you want to allocate the swap2 space.

```
  *****   Allocate the SWAP2 Space

Do you want to allocate a second swap space? (y/n) []: y

You can allocate the swap2 space to one of the disks listed in the
table below.  See the DEC OSF/1 Installation Guide for an
explanation of this table:

swap2 space ALLOCATION TABLE

Selection   Device     Software    Device       Controller   Controller
            Name       Name        Number       Name         Number
-------------------------------------------------------------------------
    1       RZ26L       rz0          0          SCSI           0
    2       RZ26        rz3          3          SCSI           0
    3       RZ58        rz8          8          SCSI           1
-------------------------------------------------------------------------

Enter your choice: 1

You selected RZ26L, device number 0.  Make sure this disk is
online and write-enabled (if applicable), then confirm your choice.

Use RZ26L, rz0 for swap2 space? (y/n) []: y
```

After you confirm your choice, you are asked to choose the partition on which you want to allocate the swap2 space. Then, you are asked to confirm your choice. For example:

```
Select the rz0 partition on which the swap2 space
will be mounted:

partition          start     size      end     overlap
-------------------------------------------------------------------------
    a      ----          0    131072    131071     c
    b      ----     131072    262144    393215     c
    c      ----          0   2050860   2050859     a, b, d, e, f, g, h
    d      ----     393216    552548    945763     c, g
    e      ----     945764    552548   1498311     c, g, h
    f      ----    1498312    552548   2050859     c, h
    g      ----     393216    819200   1212415     c, d, e
    h      ----    1212416    838444   2050859     c, e, f
-------------------------------------------------------------------------

Enter the letter specifying which partition to use: b

Use rz0 partition 'b' for the swap2 space (y/n) []? y
```

5.4.3 Allocating the var Area

You can place the `var` area of your system either in the `/usr` file system or on a separate file system.

If the system you are installing is a Dataless Management Services (DMS) server, you should allocate a separate file system for `/var` because all dataless environments reside in `/var/adm/dms` on the server. Putting `/var` under `/usr` could mean that your system will run out of disk space when you create dataless environments. Refer to *Sharing Software on a Local Area Network* for more information about allocating the `/var` area and calculating disk space for DMS environments.

Your screen display will be similar to the following:

```
*****   ALLOCATE THE /var FILE SYSTEM

The /var area of your system can either be placed in the /usr
file system or on a separate file system.

Do you want to allocate a separate file system for /var? (y/n): y
```

Enter n at the prompt if you do not want to allocate a separate file system for `var`, go to Section 5.5. If you want to allocate a separate file system for `var`, enter `y` at the prompt. The system displays a `var` allocation table similar to the one shown in the following example. Choose the disk on which you want to allocate the `var` area.

```
You can allocate the /var file system to one of the disks listed in
the table below.  See the DEC OSF/1 Installation Guide for an
explanation of this table:

/var file system ALLOCATION TABLE

Selection   Device     Software     Device    Controller  Controller
            Name        Name        Number    Name        Number
-----------------------------------------------------------------
    1       RZ26L        rz0          0      SCSI          0
    2       RZ26         rz3          3      SCSI          0
    3       RZ58         rz8          8      SCSI          1
-----------------------------------------------------------------

Enter your choice: 1

You selected RZ26L, device number 0.  Make sure this disk is
online and write-enabled (if applicable), then confirm your choice.

Use RZ26L, rz0 for /var file system? (y/n) []: y
```

After you confirm your choice about which disk you want to use for the `var` file system, you are asked to choose the partition on which you want to allocate the `/var` file system. You are also asked to choose between the UFS or AdvFS as the file system type for `var`.

```
Select the rz0 partition on which the /var file system
will be mounted:
partition           start     size      end     overlap
-------------------------------------------------------------------------
    a     ----          0    131072    131071
    d     ----     393216    552548    945763     g
    e     ----     945764    552548   1498311     g, h
    f     ----    1498312    552548   2050859     h
    g     ----     393216    819200   1212415     d, e
    h     ----    1212416    838444   2050859     e, f
-------------------------------------------------------------------------
Enter the letter specifying which partition to use: g
Use rz0 partition 'g' for the /var file system (y/n) []? y
You can select to use the UNIX File System (ufs) or the Advanced
File System (advfs) for the /var file system.  See the 'DEC OSF/1
Installation Guide' for further Information.
Select the file system type for the /var file system
(advfs/ufs) [ufs]: advfs
Making the new file system for /var on /dev/rrz0g RZ26L
```

5.5 Installing Subsets

At this point, the installation procedure installs the software subsets. The system displays a message similar to the following:

```
***             Loading the operating system software subsets
The installation procedure will now load the software on your
disk partitions. This process will take anywhere between
20 minutes to an hour, depending on your distribution media
and processor type.
You will be presented with a menu of software options in a
few moments.
        Working....Tue Jul 12 21:05:36 GMT 1994
        Working....Tue Jul 12 21:07:37 GMT 1994
        Working....Tue Jul 12 21:09:37 GMT 1994
        Working....Tue Jul 12 21:11:37 GMT 1994
```

If you are installing from CD-ROM, the installation software loads the software from the disc you used to begin the installation. You do not have to change the CD-ROM media.

5.5.1 Subsets for the Basic Installation

If you chose the basic installation, the system displays a message that it is loading subsets. If your system is a workstation, the windowing subsets are also installed. Copying, working, and verifying messages similar to the following are displayed while the system loads the mandatory subsets:

```
The following subsets will be installed:

     Base System
     Base System - Hardware Support
     Compiler Back End
     Kernel Header and Common Files
     Standard Kernel Objects
     Hardware Kernel Objects
     Hardware Kernel Header and Common Files
     Basic Networking Services
     X Servers
     Basic X Environment
     X Fonts
     DECwindows 100dpi Fonts
     Adobe Fonts
     NFS(tm) Utilities

Base System
   Copying from ds9 (inet)
        Working....Tue Jul 12 21:27:41 GMT 1994
   Verifying
        Working....Tue Jul 12 21:29:59 GMT 1994

Base System - Hardware Support
   Copying from ds9 (inet)
        Working....Tue Jul 12 21:30:31 GMT 1994
   Verifying

Compiler Back End
   Copying from ds9 (inet)
        Working....Tue Jul 12 21:31:22 GMT 1994
   Verifying
   .
   .
   .
DECwindows 100dpi Fonts
   Copying from ds9 (inet)
   Verifying

Adobe Fonts
   Copying from ds9 (inet)
   Verifying

NFS(tm) Utilities
   Copying from ds9 (inet)
   Verifying

The installation procedure has successfully installed the
software subsets.
```

If there are mandatory update subsets, the system displays a message saying it is checking to see if there is enough file system space to install the subsets. Next, the name of the update subsets as well as copying and verifying messages are displayed.

At this point, the basic installation procedure configures your system. Refer to Chapter 6 for information about setting up your system for general use.

5.5.2 Subsets for the Advanced Installation

If you chose the advanced installation, the system displays a working message followed by a list of mandatory subsets. If your system is a workstation, the windowing subsets are also installed.

```
*** Enter subset selections ***
The following subsets are mandatory and will be installed by default:
     Base System
     Base System - Hardware Support
     Hardware Kernel Header and Common Files
     Hardware Kernel Objects
     Kernel Header and Common Files
     POLYCTR advfs Kernel Objects
     Standard Kernel Objects
     Basic Networking Services
     NFS(tm) Utilities
     Compiler Back End
     POLYCTR advfs
     Adobe Fonts
     Basic X Environment
     DECwindows 100dpi Fonts
     X Fonts
     X Servers
```

The POLYCTR subsets are mandatory only if AdvFS was chosen as the file system type for `root`, `/usr`, or `/var`.

The system then displays a list of the optional subsets.

The installation procedure prevents you from putting all subsets on a disk that is not large enough to hold them. To avoid this problem, install only those optional subsets that you actually need.

Note

All subset dependencies are listed in Appendix B. It is suggested that you review this appendix before choosing your subsets to make sure you install all dependent subsets. The *Release Notes* may also contain information about subset dependencies.

For full System V compatibility, you must install the Software Development Environment (OSFPGMR300) subset; otherwise the `./usr/lib/libsys5.a` symbolic link will not be present.

There may be more subsets presented in the menu than can be displayed on a single screen. You can either select subsets in each screen, or select them all together on the last screen. If you select subsets as each screen is displayed, all your choices are presented for you to confirm on the final screen. You can also change your choices or redisplay the subset options.

At the prompt, enter the number or numbers associated with the subsets you want to install. As shown in this example, separate multiple selections with a space (or a comma) and enter consecutive ranges with a hyphen between the two selections:

```
The subsets listed below are optional:

There may be more optional subsets than can be presented on a single
screen. If this is the case, you can choose subsets screen by screen
or all at once on the last screen. All of the choices you make will
be collected for your confirmation before any subsets are installed.

 - General Applications:
     1) Common Agent
     2) Computer Aided System Tutor
     3) GNU Emacs
     4) Local Area Transport (LAT)
     5) Logical Storage Manager
     6) Logical Storage Manager GUI
     7) Logical Volume Manager
     8) UNIX(tm) SVID2 Compatibility
     9) UNIX(tm) to UNIX(tm) Copy Facility

 - Kernel Build Environment:
    10) Logical Storage Manager Kernel Header and Common Files
    11) Logical Storage Manager Kernel Objects

 - Mail Applications:
    12) DECwindows Mail Interface
    13) RAND Corp. Mail Handler (MH)

 - Network-Server/Communications:
    14) Additional Networking Services
    15) Dataless Management Services
    16) Remote Installation Service

 - Printing Environment:
    17) Adobe Font Metric Files
    18) Local Printer Support

--- MORE TO FOLLOW ---
Enter your choices or press RETURN to display the next screen.

Choices (for example, 1 2 4-6): 10-11 14-16

 - Reference Pages:
    19) Ref Pages: Admin/User
    20) Ref Pages: Programming
    21) Ref Pages: Realtime
    22) Ref Pages: Windows Admin/User
    23) Ref Pages: Windows Programming

 - Software Development:
    24) Additional Motif Demo Sources
    25) CDA(tm) Software Development
    26) CDA(tm) for X/Motif Development
    27) DEC C (cc -migrate)
    28) GNU Revision Control System
    29) LSM Software Development
    30) Realtime Software Development
```

```
    31) Software Development Environment
    32) Source Code Control System
    33) X Window Software Development

 - Supplemental Documentation:
    34) XIE Version 5 Online Documentation

 - System Administration:
    35) C2-Security
    36) C2-Security GUI
    37) Kernel Debugging Tools
    38) Obsolete Commands and Utilities
    39) Obsolete Locale databases
    40) Single-Byte European Locales
    41) System Accounting Utilities
    42) System Exercisers
    43) Verifier/Exerciser GUI
    44) Verifier/Exerciser Tool

 - Text Processing:
    45) Doc. Preparation Tools
    46) Doc. Preparation Tools Extensions

 - Windowing Environment:
    47) DECwindows 75dpi Fonts
    48) X Customizations for OEM

 - Windows Applications:
    49) Additional DECwindows Applications
    50) Additional X Applications

The following choices override your previous selections:

    51) ALL mandatory and all optional subsets
    52) MANDATORY subsets only
    53) CANCEL selections and redisplay menus

Add to your choices, choose an overriding action or
press RETURN to confirm previous selections.

Choices (for example, 1 2 4-6):  10-11 14-16 47
```

After entering your choice(s), the system displays the following list of mandatory subsets:

```
You are installing the following mandatory subsets:

        Base System
        Base System - Hardware Support
        Hardware Kernel Header and Common Files
        Hardware Kernel Objects
        Kernel Header and Common Files
        POLYCTR advfs Kernel Objects
        Standard Kernel Objects
        Basic Networking Services
        NFS(tm) Utilities
        Compiler Back End
        POLYCTR advfs
        Adobe Fonts
        Basic X Environment
```

```
        DECwindows 100dpi Fonts
        X Fonts
        X Servers
```

Next, the system displays your choice of optional subsets and asks you to confirm your choice. For example:

```
You are installing the following optional subsets:

 - Kernel Build Environment:
        Logical Storage Manager Kernel Header and Common Files
        Logical Storage Manager Kernel Objects

 - Network-Server/Communications:
        Additional Networking Services
        Dataless Management Services
        Remote Installation Service

 - Windowing Environment:
        DECwindows 75dpi Fonts
Is this correct? (y/n): y
```

If the displayed subsets are not the subsets you want to install, enter `n`. The system redisplays the subset selection menu and you can reenter your choice(s). If the correct subsets are displayed, enter `y`. The system displays a message saying it is checking to see if there is enough file system space to install the selected subsets. For example:

```
Checking file system space required to install selected subsets:

File system space checked OK.
```

The installation procedure temporarily uses `root` space for logging purposes. This space is reflected in the previous message. This space is made available after the installation procedures complete.

The system displays the subset name as well as copying, working, and verifying messages similar to the following:

```
Base System
   Copying from ds9 (inet)
        Working....Tue Jul 12 21:14:53 GMT 1994
        Working....Tue Jul 12 21:16:54 GMT 1994
   Verifying
        Working....Tue Jul 12 21:19:04 GMT 1994

Base System - Hardware Support
   Copying from ds9 (inet)
        Working....Tue Jul 12 21:19:36 GMT 1994
   Verifying

Compiler Back End
   Copying from ds9 (inet)
        Working....Tue Jul 12 21:20:50 GMT 1994
   Verifying

Kernel Header and Common Files
```

```
   Copying from ds9 (inet)
        Working....Tue Jul 12 21:22:17 GMT 1994
   Verifying

Standard Kernel Objects
   Copying from ds9 (inet)
        Working....Tue Jul 12 21:23:14 GMT 1994
        Working....Tue Jul 12 21:25:15 GMT 1994
   Verifying
        Working....Tue Jul 12 21:26:25 GMT 1994

Hardware Kernel Objects
   Copying from ds9 (inet)
        Working....Tue Jul 12 21:26:53 GMT 1994
   Verifying
        Working....Tue Jul 12 21:29:09 GMT 1994
   .
   .

POLYCTR advfs
   Copying from ds9 (inet)
        Working....Tue Jul 12 21:41:12 GMT 1994
   Verifying

Remote Installation Service
   Copying from ds9 (inet)
   Verifying

Dataless Management Services
   Copying from ds9 (inet)
   Verifying
```

When the system finishes installing the software subsets, a message informs you that the installation software has successfully installed the software subsets:

```
The installation procedure has successfully installed the
software subsets
```

The installation of the DEC OSF/1 software subsets is now complete.

If you installed DEC OSF/1 from a CD-ROM, you can remove the CD-ROM at this time. However, before you can remove it, you must unmount the CD–ROM using a command similar to the following:

```
# umount /dev/rz4c
```

If you do not unmount the CD–ROM before trying to remove it, the CD will not eject from the drive when you press the button.

Proceed to Chapter 6 for information about configuring and setting up your system.

5.6 Files on Your System After the Installation

The installation procedure leaves the `init` file in the `/tmp` directory. This is an unnecessary file that you can delete.

Many files with the prefixes `.new..` and `.proto` are left on the system. The Update Installation (documented in Chapter 2) requires the `.new..` files to retain customizations during the update installation process. The `.proto..` files are used for customizing Dataless Management Services (DMS) client systems. *Do not remove these files.*

5.6.1 Installation Log Files

A list of the log files created during the installation, along with a brief description of each file, is displayed on the screen when the installation is complete:

```
There are logfiles which contain a record of your installation.
These are:

 /var/adm/smlogs/install.log     - general log file
 /var/adm/smlogs/install.FS.log  - file system creation logs
 /var/adm/smlogs/setld.log       - log for the setld(8) utility
 /var/adm/smlogs/fverify.log     - verification log file

The above message is also recorded in /etc/motd for your
future reference.
```

In the previous example, `/etc/motd` is the file that contains the message of the day that is displayed each time a user logs in.

5.7 After the Software Subset Installation

Proceed to Chapter 6 for information about configuring and setting up your operating system for general use.

Configuring and Setting Up the System 6

This chapter provides information about:

- Configuring your system
- Entering system information
- Building the kernel
- Logging in for the first time
- Installing software licenses
- Displaying Bookreader (online) documentation
- Setting up your system for general use
- Setting up the networking, mail, and print subsystems using the Setup menu
- Enabling realtime preemption

6.1 Configuring the System

System configuration refers to the process of tailoring the operating system software for use. After the software installation is complete, a prompt asks whether or not you want to configure the system:

```
You can now choose to configure the system for use or you can
defer configuration.  If you choose to defer configuration, the
system will halt.  Configuration will happen next time the system
is booted.

If you choose to configure now, you will be asked a series
of questions.  The system will then generate a customized kernel,
reboot and be ready to use.

Would you like to configure the system for use at this time? (y/n):
```

In almost all cases you should answer `y` to this prompt. After configuration is complete you must be prepared to answer system information questions (such as your system name, your superuser password, your time zone, and the current date and time).

Note

You will not be prompted to enter your system name, the time zone, and the current date and time if this is a Remote Installation Services (RIS) installation. A RIS installation means that you installed your operating system software over a local area network (LAN) from a server system, not from a CD–ROM.

If you enter **y**, the system configuration process begins. The name of each software subset is displayed as it is being configured. Your output depends upon the software subsets you chose to install and will be similar to the following:

```
** SYSTEM CONFIGURATION ***

Configuring "Base System " (OSFBASE300)

Configuring "Base System - Hardware Support " (OSFHWBASE300)

Configuring "Compiler Back End " (OSFCMPLRS300)

Configuring "Kernel Header and Common Files " (OSFBINCOM300)

Configuring "Standard Kernel Objects " (OSFBIN300)

Configuring "Hardware Kernel Objects " (OSFHWBIN300)

Configuring "Hardware Kernel Header and Common Files"
(OSFHWBINCOM300)

Configuring "Logical Storage Manager Kernel Header and
Common Files" (OSFLSMBINCOM300)

Configuring "Basic Networking Services " (OSFCLINET300)

   •
   •
   •

Configuring "X Servers " (OSFSER300)

Configuring "Basic X Environment " (OSFX11300)

Configuring "X Fonts " (OSFMITFONT300)

Configuring "DECwindows 100dpi Fonts " (OSFFONT15300)

Configuring "DECwindows 75dpi Fonts " (OSFFONT300)

Configuring "Adobe Fonts " (OSFDPSFONT300)

Configuring "Additional Networking Services " (OSFINET300)
```

When subset configuration is complete you must enter the system information that is shown in Section 6.2. If you choose to defer configuration until a later time, enter `n` at the prompt. This halts the system and the console prompt (`>>>`) displays.

If you defer configuration, you need to boot the system to restart the system configuration process:

```
>>> b
```

After the system boots, the subsets installed during the installation procedure are configured. The name of each subset is displayed as it is being configured.

6.2 Entering System Information

After the subsets are configured, the system displays a series of prompts that ask you to enter the following system information:

- Your system name
- Your superuser (root) password
- Your time zone
- The current date and time

This information must be entered in the specified format. If you enter an inappropriate response, the prompt is redisplayed until you enter a valid response.

If you performed a Remote Installation Services (RIS) installation, the system attempts to obtain your system name, the time zone, and the current date and time from the network.

6.2.1 Entering the System Name

If the system name was not obtained from the network (during a RIS installation), you must enter a system name. The system name is used to identify your system on the network. You can use up to 64 alphanumeric characters (`a-z and 0-9`) in a system name, and the first character must be a letter. You can also use the following special characters in a system name: a hyphen (`-`), an underscore (`_`), and a period (`.`).

Following are examples of correct and incorrect system names:

Correct: George_Washington
my.new.alpha
Alpha-1994.com

Incorrect: //mysystem
1994-Alpha.system
_my.new.alpha

You may want to consult your System Administrator before choosing your system name because your System Administrator may have defined site-specific restrictions (such as maximum length).

Your screen display will be similar to the following:

```
*** SYSTEM NAME SPECIFICATION ***

Select the name of your system using alphanumeric characters.
The first character must be a letter.   For example, tinker.
Enter your system name: aruba
You selected 'aruba' as the name of your system.
Is this correct? (y/n) [y]:
```

6.2.2 Entering the Superuser (Root) Password

When you are prompted to enter your superuser password, enter the superuser password using a combination of upper and lower case letters. Passwords can contain from 5 to 16 characters, but the DEC OSF/1 operating system only verifies the first 8 characters. Digital suggests using numbers and special characters such as the dollar sign ($), the percent sign (%), the number sign (#), the period (.), the hyphen (-), the underscore (_), or the at sign (@) in your password.

The following example shows correct and incorrect superuser password specification:

Correct: What%is-it
dl_Wrote@home
9Point.99

Incorrect: lowercaseonly
nouppercase
Four

Choose a password that is easy for you to remember because you will need to use it to log in as `root` for the first time. You can change your superuser password to something more cryptic later (using the `passwd` command). When you enter the password, it is not displayed on your screen for security reasons. You will be prompted to enter your new password again as validation.

Your screen display will be similar to the following:

```
*** SUPERUSER PASSWORD SPECIFICATION **

Changing password for root.

New password:
Retype new password:
```

6.2.3 Entering the Time Zone

If the time zone was not obtained from the network (during a RIS installation), a Time Zone menu lists the time zones that are available. You should select the time zone that best describes your location. If you do not select a time zone, the default is Greenwich Mean Time (GMT). If you choose the United States (US) time zone, a second menu displays the specific time zones in the United States. Table 6-1 describes the acronyms that appear in the Main Time Zone menu:

Table 6-1: Time Zone Menu Definitions

Time Zone Acronym	Description
CET	Central European Time
EET	Eastern European Time
Factory	Specifies No Time Zone
GB-Eire	Great Britain/Ireland
GMT	Greenwich Mean Time
NZ	New Zealand
NZ-CHAT	New Zealand, Chatham Islands
MET	Middle European Time
PRC	Peoples Republic of China
ROC	Republic of China
ROK	Republic of Korea
SystemV	Specific to System V operating systems
UCT	Greenwich Mean Time
US	United States
UTC	Greenwich Mean Time
Universal	Greenwich Time
W-SU	Middle European Time
WET	Western European Time

Your screen display will be similar to the following:

```
***** Main Timezone Menu *****
------------------------------------------------------------
 1) Australia     2) Brazil       3) CET          4) Canada
 5) Chile         6) Cuba         7) EET          8) Egypt
 9) Factory      10) GB-Eire     11) GMT         12) Greenwich
13) Hongkong     14) Iceland     15) Iran        16) Israel
17) Jamaica      18) Japan       19) Libya       20) MET
21) Mexico       22) NZ          23) NZ-CHAT     24) Navajo
25) PRC          26) Poland      27) ROC         28) ROK
29) Singapore    30) SystemV     31) Turkey      32) UCT
33) US           34) UTC         35) Universal   36) W-SU
37) WET          38) Zulu

 0) None of the above
```

```
------------------------------------------------------------
Select the number above that best describes your location: 33

***** US Timezone Menu *****

------------------------------------------------------------

 1) Alaska          2) Aleutian    3) Arizona    4) Central
 5) East-Indiana    6) Eastern     7) Hawaii     8) Indiana-Stark
 9) Michigan       10) Mountain   11) Pacifi    12) Samoa

 0) None of the above

------------------------------------------------------------
Select the number above that best describes your location: 6
You selected US/Eastern as your time zone.
Is this correct? (y/n) [y]: y
```

6.2.4 Entering the Date and Time

If the date and time was not obtained from the network (during a RIS installation), you will be prompted to enter the current date and time. The system date and time is entered in the format yymmddhhmm where yy represents the year, mm represents the month, dd represents the day of the month, hh represents the current hour in 24-hour (military) time, and mm represents the minutes. For example, August 15, 1994, 4:30PM is entered as follows: 9408151630.

To enter an accurate time, it is advisable to type the minutes value one minute in the future, and when your wristwatch (or clock) reaches that minute value, you should press the Return key.

Your screen display will be similar to the following:

```
*** DATE AND TIME SPECIFICATION ***

The current date and time should be specified using the following
format:

        yymmddhhmm

Use two digits for year (yy), month (mm), day (dd), hour (hh), and
minute (mm).  Enter the time in 24-hour format.  For example, 11:30
p.m. on July 25, 1993 would be entered as:

        9307252330

Enter the date and time: 9408151630

The date and time has been set to Mon Aug 15 16:30:09 EST 1994
Is this correct? (y/n) [y]:
```

If the current date and time was obtained from the network during a RIS installation, you will not be prompted to enter the information, and the following message displays automatically:

```
The date and time has been set to Mon Aug 15 16:30:09 EDT 1994
```

Note

The installation procedure includes the date and time in Greenwich Mean Time (GMT) in some displays. The date and time recorded by the installation procedure might be later or earlier than the date and time for your time zone. Although the absolute time displayed in the installation is incorrect, relative time elapsed is accurate. Therefore, you can still use time-stamping to determine how long the installation is taking.

6.3 Building the Kernel

If you performed a basic installation, the kernel is built automatically. Continue with Section 6.4.

If you performed an advanced installation, the kernel options that you see on your display will depend on the subsets that you selected during installation. The system displays a menu of kernel options similar to the following:

```
*** KERNEL CONFIGURATION AND BUILD PROCEDURE ***

*** KERNEL OPTION SELECTION ***
    Selection   Kernel Option
-----------------------------------------------------------------
        1       System V Devices
        2       Logical Volume Manager (LVM)
        3       Kernel Breakpoint Debugger (KDEBUG)
        4       Packetfilter driver (PACKETFILTER)
        5       STREAMS pckt module (PCKT)
        6       X/Open Transport Interface (XTISO, TIMOD, TIRDWR)
        7       File on File File System (FFM)
        8       ISO 9660 Compact Disc File System (CDFS)
        9       Audit Subsystem
        10      Local Area Transport
        11      Logical Storage Manager (LSM)
        12      All of the above
        13      None of the above
-----------------------------------------------------------------
Enter the selection number for each kernel option you want.
For example, 1 3 : 12
```

The following is a description of each kernel option:

System V Devices
: The System V Devices option includes kernel options for devices required for the System V environment product. These devices are `/dev/prf` (System V kernel profiler) and `FFM_FS` (File On File File System).

Advanced File System (AdvFS)
: The Advanced File System is a log-based, local file system that allows modification and expansion of file systems by mounting on different devices or adding devices to that file system.

  If you chose AdvFS as the file system type for `/usr` or `/var` the subset is not optional and will not be displayed in the menu; AdvFS will be configured automatically.

Logical Volume Manager
: The Logical Volume Manager provides a virtual disk that enables you to store data without regard to the physical boundaries of individual disks.

Kernel Breakpoint Debugger (KDEBUG)
: The Kernel Breakpoint Debugger loads the kernel debugger `kdebug` and provides physical memory space for debugging custom kernels.

Packetfilter driver
: The packetfilter is a software interface that allows an application to send and receive packets directly to or from a LAN (Ethernet or FDDI). The packetfilter provides flexible demultiplexing ("filtering") of incoming packets, so that many such applications may run simultaneously. Refer to `packetfilter(7)` for more information.

STREAMS pckt module (PCKT)
: The STREAMS pckt module provides emulation for the SVR4 pty packet module.

Data Link Bridge (DPLI V2.0 Service Class 1)
: Provides a DLPI V2.0 (Service Class 1) interface to BSD IFNET based network interfaces which allows STREAMS based protocol stacks to utilize BSD IFNET based network interfaces.

  This kernel option is mandatory for LAT (Local Area Transport). If you installed LAT, Data Link Bridge does not appear as a kernel option.

X/Open Transport Interface (XTISO)
: The X/Open Transport Interface (XTISO) defines an application interface that is independent of any transport provider. Programs written to XTI can be run over a variety of transport providers, such as Transmission Control Protocol (TCP) or User Datagram Protocol (UDP). The application specifies which transport provider to use.

File on File File System (FFM)
: File on File (FFM) is a file system that permits mounting a regular, character, or block special file on top of a regular file to support the STREAMS subsystem. This feature is used mainly by SVR4 compatible system calls. It can be viewed as a dynamic version of named pipes. The contents of the covered file are still available to any process that had the file open at the time of the FFM mount. FFM is required for the System V Environment.

ISO 9660 Compact Disc File System (CDFS)
: CDFS provides the ability to mount CD-ROMs formatted to the ISO 9660 standard or the High Sierra Group (HSG) format.

Audit Subsystem
: The Audit Subsystem provides a security audit system configurable through the `audit_setup` command. The subset provides additional security on system features such as passwords, account ownership, and remote access.

Local Area Transport Support
: The LAT protocol provides an efficient means of logically connecting terminal servers to one or more nodes on the same local area network (LAN).

  LAT software has the features required for a host to function as a service node, so requests for connections can be made by server users. It also permits host applications to initiate connections to a server's ports, designated as applications ports, to access remote devices.

  If you chose the LAT subset when you made your subset selections, the subset is not displayed in the menu and is configured automatically.

  If you add the LAT subset at a later time, you will have to reconfigure the kernel.

Logical Storage Manager (LSM)
: The Logical Storage Manager is an integrated, host- based disk storage management tool that protects against data loss and improves disk input/output (I/O) performance. System Administrators use LSM to perform disk management functions without disrupting users or applications accessing data on those disks.

After entering your choice of kernel options, the system displays a list of options you selected and asks you to verify your choice. For example:

```
You selected the following kernel options:

        Logical Volume Manager
        Kernel Breakpoint Debugger (KDEBUG)
        Packetfilter driver (PACKETFILTER)
        STREAMS pckt module (PCKT)
        Streams Socket Coexistence (DLB & STRIFNET)
```

```
        X/Open Transport Interface (XTISO, TIMOD, TIRDWR)
        File on File File System (FFM)
        ISO 9660 Compact Disc File System (CDFS)
        Audit Subsystem
        Local Area Transport Support
        Logical Storage Manager (LSM)

Is that correct? (y/n) [y]:
```

If the displayed kernel options are not the ones you want, enter `n` at the prompt. If the displayed kernel options are the ones you want, enter `y` or press Return to accept the default response. Next, the system asks if you want to edit the configuration file, for example:

```
Do you want to edit the configuration file? (y/n) [n]:
```

If you enter `n` or press Return (to enter the default response), the kernel build process begins:

```
The system will now automatically build a kernel
and then reboot. This will take approximately 15
minutes, depending on the processor type.

When  the login prompt appears after the system
has rebooted, use 'root' as the  login name and
the SUPERUSER  password that was entered during
this procedure, to log into the system.
```

When the subsets are configured and the configuration file is completed, the `doconfig` utility makes the special device files needed by the hardware and builds the kernel for your system. Messages similar to the following are displayed:

```
*** PERFORMING KERNEL BUILD ***
        Working....Tue Jul 12 15:45:24 EST 1994
        Working....Tue Jul 12 15:47:24 EST 1994
        Working....Tue Jul 12 15:49:25 EST 1994
        Working....Tue Jul 12 15:51:26 EST 1994
```

Note

If you did not set the `boot_osflags` variable, by default the system is in single-user mode when it reboots. The system reboots using the new kernel when `doconfig` completes. To bring the system to multiuser mode, press Ctrl/d at the prompt (#).

If you want to edit the configuration file before the kernel build process begins, the system gives you the opportunity to enter the `ed` text editor to

edit the configuration file. If you enter `y` at the following prompt:

```
Do you want to edit the configuration file? (y/n) [n]:
```

the following message displays:

```
Using ed to edit the configuration file.  Press return when ready,
or type 'quit' to skip the editing session:
```

Press Return if you want to enter the `ed` text editor. Enter the word `quit` if you want to skip the editing session and start the kernel build process.

The *Command and Shell User's Guide* contains a tutorial that teaches you how to use the `ed` text editor. Refer to *System Administration* for information about the contents of the configuration file and the entries that you may want to edit.

Refer to Section 6.10 if you want to enable realtime preemption.

6.4 Logging in to the System

What happens when you log in for the first time depends upon whether you have a workstation or a terminal:

- If you have a workstation, a login window is displayed. Enter `root` as the login name and enter the superuser password you set up earlier when you entered your system information. When you correctly enter your system name and password, a setup message displays. You will only see this message the first time you log in. For subsequent logins, a Session Manager window and a DECterm window will appear. If you have a workstation, proceed to Section 6.5 for an explanation of the setup message.
- If you do not have a workstation, enter `root` at the login prompt (as the user name) and enter the superuser password you specified earlier when you entered your system information. Proceed to Section 6.6 for information about registering and loading the licenses for the DEC OSF/1 operating system.

6.5 The Setup Welcome Message

If you have a workstation, the first time you log in as `root` after a system installation or the first time you activate a FIS (factory installed software) system, the DEC OSF/1 operating system displays a setup welcome message.

This message tells you how to prepare your operating system for general use now that you have installed the DEC OSF/1 software and built the kernel. The topics in the welcome message contain information about Product Authorization Keys (PAKs), adding users, and reading online documentation. An example of the setup welcome message and topics follows:

```
                Welcome to DEC OSF/1 Version V3.0
                =================================

To prepare this system for general use, the Product Authorization
Keys (PAKs) that were purchased with this system must be installed
to allow users to login and/or access licensed software packages.
In addition, several DEC OSF/1 subsystems, such as networking,
mail, printing and others, must be configured.

This utility, in addition to allowing for the configuration of
DEC OSF/1 subsystems, provides information on other tasks that you
may want to do during or after this utility runs.  You can access
this information from the menu presented below.  If you wish to
view this information, do so prior to selecting
"Begin system configuration".  This information is also
available in the "Installation Guide" and the "FIS Guide".

1) Read this first!
2) Information about loading license PAKs
3) Information about accessing on-line documentation
4) Information about adding users
5) Begin system configuration
6) Exit

Please enter your selection:
```

If you enter 6 and exit the setup welcome message, you still need to configure your DEC OSF/1 subsystems at a later time by entering `/usr/sbin/setup` or by selecting `System Setup` from the Session Manager's application menu when logged in as root. Section 6.6 through Section 6.9 also describe the topics presented in the setup welcome message.

The following examples show the contents of each topic in the welcome message:

1. Read This First:

```
   This system should have included all of the software, hardware
   options, documentation, and product authorization keys (PAKs)
   that you ordered.  In some cases, documentation sets and/or
   DEC OSF/1 distribution CD-ROMs may not have been purchased for
   each system ordered.

   The configuration utilities invoked by this utility are designed
   to simplify the configuration process and have been made as
   self-explanatory as possible.  However, before beginning to
   configure your system, it is highly recommended that you refer
   to the following guides--either on-line, as part of the
```

```
DEC OSF/1 distribution CD-ROM, or in the startup kit or the
separately orderable hardcopy documentation set:

                + Installation Guide

                + Network Configuration

                + System Administration


In addition, please remember to read the "Release Notes" for
your version of DEC OSF/1, since they contain important
information about the installation and about the operating
system in general.

Press RETURN to continue
```

2. Information about loading license PAKS:

```
                        LOADING LICENSE PAKS

Product Authorization Keys (PAKs) are included with your
distribution kit and are used to register a license for a
product.  To register and load the license PAKs for the
DEC OSF/1 operating system and other products, you must use
the License Management Facility (LMF).

The OSF-BASE PAK must be registered before you can use DEC
OSF/1.  This PAK provides simultaneous login capacity for two
users and allows you to access the on-line documentation.
The user root does not count as an Interactive Operating
System User.

The OSF-BASE PAK is an availability PAK (see LMF documentation
for further explanation of PAK types).  This PAK comes in
varying denominations corresponding to your system type.
If you have upgraded your system by purchasing new or additional
CPU modules, you may need to upgrade your OSF-BASE license.
This can be accomplished by registering the OSF-BASE PAK
provided with your original system purchase along with
additional OSF-BASE PAKS provided with your system upgrade
purchases.

OSF-USR PAKs provide simultaneous login capacity for additional
users above and beyond those provided by the OSF-BASE PAK.
NOTE:  If you have an OSF-USR PAK having zero units, which
allows an unlimited number of users, remove all other
OSF-USR PAKs, including the one automatically registered during
the installation, before registering the unlimited OSF-USR PAK.

You may have purchased other PAKs, or have other PAKs which were
included with your system purchase that should also be
registered using the License Management Facility.
```

If you have an existing PAK with an Availability Code of "H" please refer to the chart below for the required license units. In the event that you need additional license units, please contact your sales representative.

AVAILABILITY "H" LICENSE REQUIREMENTS

Processor Name	Lic Units
DEC 2000-300	1050
DEC 2000-500	1050
DEC 3000-300	1050
DEC 3000-400	1050
DEC 3000-600	1050
DEC 3000-700	1050
DEC 3000-500	1100
DEC 3000-800	1100
DEC 3000-900	1100
Digital 2100 A500/600MP	1100
DEC 4000-610	1150
DEC 4000-620	1200
DEC 4000-710	1150
DEC 4000-720	1200
DEC 7000-710 thru 760	1150
DEC 7000-610	1200
DEC 7000-620 thru 660	1250
DEC 10000-610	1250
DEC 10000-620 thru 660	1300

When you begin the system configuration, PAKs can be registered by selecting License Management Facility (LMF) from the menu. You may optionally execute lmf to manage PAKS (see lmf(8)) at a later time.

The Installation Guide provides additional information about registering the OSF-BASE and OSF-USR PAKS.

Press RETURN to continue

3. Information about accessing on-line documentation:

ACCESSING ON-LINE DOCUMENTATION

The DEC OSF/1 documentation is provided on the CD-ROM as files that can be displayed using the Bookreader, a DECwindows application. If you have a workstation and the DEC OSF/1 CD-ROM, you can view the documentation on your system by following these steps:

1. Log in as root or become superuser.

2. Place the DEC OSF/1 CD-ROM in the CD-ROM drive.

3. Mount the DEC OSF/1 CD-ROM on /cdrom by entering the following commands:

```
# mkdir /cdrom

# mount -r /dev/rz<unit #>c /cdrom
```

(Replace <unit #> with the unit number of your CD-ROM drive.)

In almost all cases, the unit number of the CD-ROM drive on a new system will be 4 (/dev/rz4c). However, to ensure that you have the correct unit number for the drive, enter the following command as root:

```
# file /dev/rrz*c
```

The file command will identify the CD-ROM drive as an RRD disk. The unit number of the drive will be in the left-hand column (rrz4c in the following example):

```
/dev/rrz4c:  character special (8/4098) SCSI #0 RRD42 disk #32
             (SCSI ID #4)
```

4. Change the permissions of the file /usr/lib/dxbook/library.decw_bookshelf by entering the following command:

```
# chmod 644 /usr/lib/dxbook/library.decw_bookshelf
```

5. Using the text editor of your choice, append the following SINGLE line to the file /usr/lib/dxbook/library.decw_bookshelf:

```
shelf\/cdrom/DOCUMENTATION/BOOKREADER/decosf1\DEC OSF/1 Online Doc
```

6. To bring up Bookreader, do one of the following:

   1) Enter the following command:

      ```
      # /usr/bin/X11/dxbook &
      ```

   2) Select the Bookreader option from the 'Applications' menu of the Session Manager.

For information on how to serve Bookreader files across NFS or to review these setup instructions, see the Installation Guide.

For additional information on using Bookreader, see the book Using Bookreader, accessible on Bookreader itself.

Press RETURN to continue

4. Information about adding users:

```
                        ADDING USERS

The way to add users to your system varies depending on how
your system is configured.

If your system has Enhanced Security, you should use the
XSysAdmin utility to add users.  The Security guide has more
information.

If your system uses the Network Information Service (NIS),
the local or distributed passwd file may need to be modified.
To set passwords when NIS is in use, the yppasswd command is
used.  The Network Configuration guide has more information.

If this system uses neither Enhanced Security nor NIS, you can
use the adduser command to create user accounts.  The System
Administration guide has more information.
```

5. Begin system configuration:

```
You can use this menu to set up your system and network.
Select the item you want to set up and answer the questions.

For more information on the items in the menu see the System
Administration and Network Configuration guides.


        1) Internet Networking
         ) Local Area Transport (LAT)
        2) Berkeley Internet Name Domain Service (BIND)
        3) Network Information Service (NIS)
        4) Network File System (NFS)
         ) UNIX-to-UNIX Copy Program (UUCP)
        5) Network Time Protocol (NTP)
        6) Mail
         ) POLYCENTER Common SNMP Agent
         ) Printers
        7) Security (BSD/C2)
        8) Security Auditing
        9) License Management Facility (LMF)
       10) Prestoserve I/O Acceleration
         ) Verifier/Exerciser Tool (VET)
       11) Update Administration Utility
       12) Exit

Enter the menu item number that you want:
```

The setup welcome message is displayed only on your workstation the first time you log in as `root` or the first time you access your FIS system. If you do not choose to perform the necessary subsystem configuration at this time,

you must do so at a later time through the use of the `setup` utility. This utility is accessed by entering the following command (as superuser):

```
# /usr/sbin/setup
```

If you did not choose to use the setup welcome menu to set up your system, Section 6.6 contains more information about the License Management Facility and how to install your PAKs, Section 6.7 describes how to display online documentation, and Section 6.9 contains information about system setup in general. Continue with Section 6.6 to install your PAKs.

6.6 Using the License Management Facility

To register and load the licenses for the DEC OSF/1 operating system and other products, you must use the License Management Facility (LMF). Before registering a license for a product, you need a Product Authorization Key (PAK). A PAK contains licensing information for the product and is included with your distribution kit. This information must be registered in the License Database (LDB) and loaded into the kernel cache to use the product.

This section describes how to register and load the Base System license. The Base System PAK provides simultaneous login capacity for two users and allows you to access the online documentation. An example of a license PAK follows:

```
 - - - - - - - TM
| | | | | | | |      LICENSE SOFTWARE PRODUCT     |DOCUMENT ISSUE DATE |
|d|i|g|i|t|a|l|      PRODUCT AUTHORIZATION KEY   |     1-JUL-1994     |
| | | | | | | |                                   |____________________|
 - - - - - - -
Digital Equipment Corporation
Maynard, MA.

 _____________________________________
| LICENSE ADMINISTRATION LOCATION:    |  ORDERED BY: USER
|                                     |              USER
| Digital Equipment Corporation       |              USER
| Corporate Business Practices        |
| 110 Spit Brook Road                 |
| Nashua, N.H. 03062                  |
 -------------------------------------
*************************************************************************
 PAK ID:
                    Issuer: DEC
      Authorization Number: CBPTMP011317

 PRODUCT ID:
               Product Name: OSF-BASE
                   Producer: DEC

 NUMBER OF UNITS:
            Number of units: 50

 KEY LEVEL:
                    Version: 3.0
      Product Release Date: 26-JUL-1994

 KEY TERMINATION DATE:
      Key Termination Date: 30-JUL-1995

 RATING:
   Availability Table Code: A
       Activity Table Code:

 MISCELLANEOUS:
                Key Options: ALPHA
              Product Token:
                Hardware-Id:
                   Checksum: 2-DMNK-NCGN-AIOI-ODEG
*************************************************************************
```

To install a PAK, use the `lmfsetup` (License Management Facility) program. You can access this program as `root` either from the command line or by using the `setup` menu. Refer to Section 6.9.1 for information on using the Setup menu. In either case, the `lmfsetup` program prompts you for information and then registers the license data. Use the information provided in the paper PAK that is included with your distribution kit to answer the prompts. Some items in the PAK may not have an associated value; press Return at these prompts.

Note

Use the `lmf reset` command or reboot your system to enable PAKs that were loaded since the last system reboot.

Example 6-1 shows a sample `lmfsetup` session. Complete the following steps to register and load the Base System license:

1. To run the `lmfsetup` program, enter the following command:

   ```
   # /usr/sbin/lmfsetup
   ```

   The program displays the `lmfsetup` menu as shown in Example 6-1. Use the information provided in the paper PAK to answer the prompts.

Example 6-1: Sample lmfsetup Session

```
Register PAK (type q or quit to exit)  [template]
                    Issuer : DEC
  Authorization Number : CBPTMP011317
          Product Name : OSF-BASE
              Producer : DEC
       Number of units : 50
               Version : 3.0
  Product Release Date : 01-JUL-1994
  Key Termination Date : 30-JUN-1995
Availability Table Code : A
    Activity Table Code :
           Key Options : ALPHA
         Product Token :
           Hardware-Id :
              Checksum : 2-DMNK-NCGN-AIOI-ODEG
PAK registered for template successfully
Register PAK (type q or quit to exit) [template] q
Would you like an lmf reset to be performed at this time? [Yes]
```

2. To load the license into the kernel cache, enter the following command:

   ```
   # /usr/sbin/lmf load 0 OSF-BASE
   ```

3. To display details of the registered products on your screen, enter the following command:

   ```
   # /usr/sbin/lmf list
   ```

   Information similar to the following is displayed on the screen:

   ```
   Product             Status              Users: Total     Active

   OSF-BASE            active                     2
   OSF-USR             active                     2
   ```

   An `active` status for a product indicates that it is registered and loaded into the kernel cache. An `enabled` status indicates that the product is registered, but not loaded.

If you purchased the Server Extension PAK or the Developer's Extension PAK, it can be installed at this time.

6.7 Displaying the Documentation

The DEC OSF/1 documentation is provided on the CD-ROM as files that can be displayed using Bookreader, a DECwindows application. You must install the OSF-BASE PAK provided with your kit to use Bookreader.

These instructions explain how to view Bookreader files on either a standalone workstation or client/server installations.

6.7.1 Accessing the Documentation from a Workstation

To access the documentation on a workstation, follow these steps:

1. If you do not know the device name for the CD-ROM drive, use the `file` command to find it. Enter the following command as superuser:

   ```
   # file /dev/rrz*c
   ```

   The `file` command returns output similar to that shown in the following example. The entry for the CD-ROM drive includes the words `RRD42 disk`. On a DEC 3000 Model 500 processor, the CD-ROM is usually `rz4`. The backslashes in this example indicate line continuations and are not in the actual display.

   ```
   /dev/rrz2c: character special (8/2050) SCSI \
   #0 RZ25 disk #16 (SCSI ID #2)
   /dev/rrz3c: character special (8/3074) SCSI \
   #0 RZ25 disk #24 (SCSI ID #3)
   /dev/rrz4c: character special (8/4098) SCSI \
   #0 RRD42 disk #32 (SCSI ID #4)
   /dev/rrz8c: character special (8/16386) SCSI \
   #1 RZ56 disk #64 (SCSI ID #0)
   /dev/rrz9c: character special (8/17410) SCSI \
   #1 RZ57 disk #72 (SCSI ID #1)
   ```

2. As superuser, use the `mkdir` command to make a directory. Then use the `mount` command to mount the CD-ROM As shown in the following example, substitute the unit number of your CD-ROM drive for the *`unit_number`*.

   mount -r /dev/rz *unit_number* **c /cdrom**

   For example, to mount a directory named `cdrom` on `rz4c`, enter the

following commands:

```
# mkdir /cdrom
# mount -r /dev/rz4c /cdrom
```

To ensure that the CD-ROM is remounted in the event that your system crashes or is rebooted, use the text editor of your choice and open the `/etc/fstab` file. Add the following line:

```
/dev/rz4c   /cdrom   ufs   ro   0  0
```

When your edits are correct, write and quit the file.

The system will now mount the CD-ROM on `/cdrom` on every reboot.

3. Change the permissions for the file `/usr/lib/dxbook/library.decw_bookshelf` by entering the following command:

```
# chmod 644 /usr/lib/dxbook/library.decw_bookshelf
```

4. Edit the `/usr/lib/dxbook/library.decw_bookshelf` file and append the following single line to the file:

```
shelf\/cdrom/DOCUMENTATION/BOOKREADER/decosf1\DEC OSF/1 X3.0 Online
Docs
```

You can change the file name `/decosf1` to anything that you want. By doing this, you prevent an extra level of documentation hierarchy in the Bookreader library window. The file `library.decw_bookshelf` in directory `/usr/lib/dxbook` also contains a TITLE line that displays the title of `dxbook`. You can change this title from "Sample Library" to something else, for example, *Documentation Library.* Search for the following line:

```
TITLE\sample_lib\Sample Library
```

Replace the line in the previous example with the following line:

```
TITLE\/usr/lib/dxbook\Documentation Library
```

Once Bookreader is running, you can use it to read the books on the disc. For more information, read the online book *Using Bookreader.*

6.7.2 Accessing the Documentation from a Server

Because Bookreader does not support character cell terminals in the base product, to view the DEC OSF/1 Bookreader files you must export them to a workstation running either ULTRIX Version 4.2 (or higher), DEC OSF/1 Version 1.3 (or higher), or DEC OSF/1 Version 3.0.

The following steps assume that networking is set up on the server system. For further information on setting up the network, refer to `netsetup`(8) and `nfssetup`(8) or *Network Configuration.*

To export the Bookreader files to a workstation, follow these steps:

- On the server system:
  1. Log in as root or become superuser.
  2. Ensure that the DEC OSF/1 CD-ROM is mounted or that the Bookreader files have been copied to disk. This example assumes that the server system has mounted the DEC OSF/1 CD-ROM on `/cdrom`. For instructions on how to mount the CD-ROM, see Section 6.7.1.
  3. Using the text editor of your choice, place an entry in the `/etc/exports` file for the `/cdrom` directory and make sure that you specify the `-ro` option for a read-only export, as follows:

     ```
     /cdrom -ro
     ```

- On the client system:
  1. Log in as root or become superuser.
  2. Run `nfssetup` and import the `/cdrom` directory from the server as a read-only file system.
  3. When `nfssetup` completes, mount the `/cdrom` directory by entering the following command:

     ```
     # mount /cdrom
     ```

  4. Change the permissions for the `/usr/lib/dxbook/library.decw_bookshelf` file by entering the following command:

     ```
     # chmod 644 /usr/lib/dxbook/library.decw_bookshelf
     ```

  5. Edit the `/usr/lib/dxbook/library.decw_bookshelf` file and append the following single line to the file:

     ```
     shelf\/cdrom/DOCUMENTATION/BOOKREADER/decosf1\DEC OSF/1 X3.0
     Online Docs
     ```

The `/usr/lib/dxbook/library.decw_bookshelf` file also contains a TITLE line that displays the title of `dxbook`. You can change this title from ''Sample Library'' to something else, for example, *Documentation Library*. Search for the following line:

```
TITLE\sample_lib\Sample Library
```

Replace the line in the previous example with the following line:

```
TITLE\/usr/lib/dxbook\Documentation Library
```

Once Bookreader is running, you can use it to read the books on the disc. For more information, read the online book *Using Bookreader.*

6.8 Documentation on the DEC OSF/1 CD-ROM

Table 6-2 lists all the documentation included on your DEC OSF/1 CD-ROM in Bookreader (.DECW_BOOK) format. These files are in the directory /DOCUMENTATION. In addition to documentation files, the disc contains bookshelf files, which Bookreader uses to organize the library of books into bookshelves. Once Bookreader is running, the manual *Using Bookreader* and the bookshelf for the DEC OSF/1 Operating System books appear in the library window. The DEC OSF/1 bookshelves are arranged as follows:

- Startup Documentation
- General User Documentation
- System and Network Administration Documentation
- Programming Documentation
  - Windows Programming Documentation
  - General Programming Documentation
- Writing Device Drivers Documentation
- Migration Documentation
- Security Documentation
- Reference Pages

Table 6-2: Bookreader Bookshelves and Titles

Bookshelf	Book Title
Startup	*Installation Guide*
	New and Changed Features
	Release Notes
General User	*Command and Shell User's Guide*
	DECwindows User's Guide
	Documentation Overview and Glossary
	Security
	New and Changed Features

Table 6-2: (continued)

Bookshelf	Book Title
	Release Notes
	Technical Overview
	ULTRIX to DEC OSF/1 Migration Guide
System and Network Administration	*DEC Verifier and Exerciser Tool User's Guide*
	Security
	Guide to Prestoserve
	Kernel Debugging
	Logical Storage Manager
	Network Administration and Problem Solving
	Network Configuration
	New and Changed Features
	Release Notes
	Sharing Software on a Local Area Network
	Software License Management
	System Administration
	System Tuning and Performance Management
	ULTRIX to DEC OSF/1 Migration Guide
	X Window System Environment
Windows Programming	*DECwindows Companion to the OSF/Motif Style Guide*
	DECwindows Extensions to Motif
	DECwindows Motif Guide to Application Programming
	Developing Applications for the Display PostScript System
	New and Changed Features
	OSF/Motif Programmer's Guide
	OSF/Motif Style Guide
	Release Notes
	X Window System Environment

Bookshelf	Book Title
General Programming	*Assembly Language Programmer's Guide*
	DEC OSF/1 Calling Standard for AXP Systems
	Security
	Digital Portable Mathematics Library
	DECladebug Debugger Manual: Command-Line Interface
	Guide to DECthreads
	Guide to Realtime Programming
	Network Programmer's Guide
	New and Changed Features
	Programmer's Guide
	Programming with ONC RPC
	Programming Support Tools
	Release Notes
	ULTRIX to DEC OSF/1 Migration Guide
	Writing Software for the International Market
Writing Device Drivers	*Writing Device Drivers: Tutorial*
	Writing Device Drivers: Reference
	Writing Device Drivers: Advanced Topics
	Writing Device Drivers for the SCSI/CAM Architecture Interfaces
	Writing EISA and ISA Bus Device Drivers
	Writing PCI Bus Device Drivers
	Writing TURBOchannel Device Drivers
	Writing VMEbus Device Drivers
	Release Notes
	New and Changed Features
Migration	*ULTRIX to DEC OSF/1 Migration Guide*
Reference Pages	*Reference Pages Section 1*
	Reference Pages Section 2
	Reference Pages Section 3
	Reference Pages Section 4
	Reference Pages Section 5

Bookshelf	Book Title
	Reference Pages Section 7
	Reference Pages Section 8

6.9 Setting Up the System

This section describes the steps necessary to prepare your operating system for general use. If you have a workstation and you did not perform these steps from the DEC OSF/1 Welcome Menu the first time you logged in as `root` or the first time you activated your FIS system, you must follow the instructions in this section to perform the required subsystem configurations.

This section explains how to do the following:

- Use setup scripts

  There are programs (scripts) to help you perform tasks such as setting up the network or setting up mail.
- Add users and groups
- Run the SVID2 Habitat
- Verify the installation
- Set up security features

6.9.1 Using the Setup Programs

There are programs such as `lprsetup`, `netsetup`, and `bindsetup` to help you set up your printer and network. These programs are available from a menu and from the command line.

To use the Setup menu on a workstation, log in as `root` and choose `System Setup` from the `Applications` menu. You can also access the Setup menu from the command line by becoming root and entering the `setup` command. For example:

```
# su - password:
# /usr/sbin/setup
```

In either case, the system displays a menu similar to the following:

```
You can use this menu to set up your system and network.
Select the item you want to set up and answer the questions.

For more information on the items in the menu see the "System
Administration" and "Network Configuration" guides.
```

```
 1) Internet Networking
 2) Local Area Transport (LAT)
 3) Berkeley Internet Name Domain Service (BIND)
 4) Network Information Service (NIS)
 5) Network File System (NFS)
 6) UNIX-to-UNIX Copy Program (UUCP)
 7) Network Time Protocol (NTP)
 8) Mail
 9) POLYCENTER Common SNMP Agent
10) Printers
11) Security (BSD/C2)
12) Security Auditing
13) License Management Facility (LMF)
14) Prestoserve I/O Acceleration
15) Verifier/Exerciser Tool (VET)
16) Update Administration Utility
17) Exit

Please enter your selection:
```

The options on this menu differ depending on which subsets were chosen during the installation. In the previous example, all mandatory and optional subsets were chosen during the installation. If a subset was not installed, the option appears on the menu, but the number next to it will not be displayed. When a number is not displayed next to an option, you cannot choose that option.

When you choose an option, messages may be displayed that scroll off the top of the screen. Use the scroll bar at the left of the screen to review these messages. Each of the setup programs is a series of interactive prompts during which questions are displayed on the screen and you respond accordingly. Most questions provide you with default responses and in most cases, you can choose the defaults. Any default parameters that you accept can always be changed at a later time.

You should read the relevant sections of the DEC OSF/1 documentation set before running a setup program or choosing an option from the Setup menu. The documentation will tell you what information you need to answer screen prompts. It will also tell you if there are any prerequisites to running a specific setup program.

The *Network Configuration* guide provides information that you will need to use the networking programs. The *System Administration* guide provides information on system administration tasks such as configuring printers. Other options, such as the License Management Facility, refer to specific documents from the DEC OSF/1 documentation set.

6.9.2 Adding a User Account

This section describes how to add a user account by using the `adduser` program. The `adduser` program can be used if you are running the Berkeley Internet Name Domain (BIND) naming service. If you are running the Network Information Service (NIS) naming service, refer to *Network*

Configuration for information on how to add a user on a networked system.

Note

If you have enhanced security installed on your system, you should use the `XSysAdmin` windowing interface to add users. Refer to *Security* and `XSysAdmin`(8) for more information.

Use the `adduser` command to add user accounts to the system. You can use the `addgroup` command to modify the `/etc/group` database file.

To use the `adduser` program, enter the following command:

```
# adduser
```

The program responds with a series of prompts and messages, as shown in the following examples. The brackets ([ ]) indicate a default response. Press Return to accept the default, or enter a different response and press Return.

```
Enter a login name for the new user (for example, john): chris
Enter a UID for (chris) [5006]:  Return
Enter a full name for (chris): Christopher Ryan
Enter a login group for (chris) [users]:  Return
Enter another group that (chris) should be a member of.
(<Return> only if none):  Return
Enter a parent directory for (chris) [/usr/users]:    Return
The shells are:
/usr/bin/sh       /usr/bin/ksh      /bin/csh          /bin/ksh
/usr/bin/csh      /bin/sh
Enter a login shell for (chris) [/bin/sh]:  Return
```

Then `adduser` asks if you want to edit the authentication entry for the user. If you have enhanced security installed on your system, you can answer `y` to this prompt. If the environment variable EDITOR is set, `adduser` will use $EDITOR to edit the user's authentication entries. If you do not have enhanced security installed, press Return to accept the default response.

```
Do you wish to edit the auth file entry for this user (y/[n])?  Return
```

Next, the `adduser` program displays informational messages and asks you to enter a new password for the user. To ensure confidentiality, the password will not be displayed.

```
Adding new user ...
Rebuilding the password database...
10 password entries, maximum length 145
Creating home directory...

You must enter a new password for (chris).
Changing password for chris.

New password:
Retype new password:
```

If you mistype the password when you are asked to verify it, no password is set and the account is disabled. To enable the user account, enter the

passwd command followed by the user name.

A hashed passwd database allows for faster searches of the passwd file. If a hashed passwd database did not exist previously, the program displays a message informing you that the hashed passwd database does not exist and asks if you want a database created. If you want a hashed passwd database, enter yes at the prompt and the adduser program will create one for you. If you do not want a hashed passwd database, enter no at the prompt. Refer to the vipw(8) reference page for more information.

The adduser program automatically creates a /var/spool/mail directory for the user. If the user plans to use the Network File System (NFS) to mount the mail file to a workstation, you might want to create the mail file for the user. Refer to *Network Configuration* for information on exporting a mail file to a workstation.

For more information on the adduser utility, see adduser(8). For information on adding a group, see *System Administration* or addgroup(8).

6.9.3 Setting Up Printers

Printers are setup up with the lprsetup program.

The lprsetup program prompts you for the name and type of the printer. After answering these questions, you are prompted with a series of other questions, which you can answer by taking the default.

Note

Printing cannot take place unless the lpd daemon is running.

Refer to lprsetup(8) for more information.

6.9.4 Running the SVID2 Habitat

If you have installed the SVID subsets and want to run the SVID2 Habitat, execute the following command (as superuser) after the system is booted.

```
# /usr/sbin/timezone
```

6.9.5 Verifying the Installation

If you installed the Verifier/Exerciser Tool (VET) subset, you can use VET to verify that the hardware and the operating system installed successfully. Refer to the *DEC Verifier and Exerciser Tool User's Guide* for information on VET.

6.9.6 Setting up Security

Refer to *Security* for information on setting up the enhanced security option. You must install the C2 security subsets before you can use this feature.

6.9.7 Setting Up the Logical Storage Manager (LSM)

Refer to *Logical Storage Manager* for information about setting up LSM. You must install the LSM subsets before you can use this feature.

6.10 Enabling Realtime Preemption

By default, most POSIX 1003.1b realtime features are configured into your kernel, however, the option to enable realtime preemption is not presented or configured when you run `doconfig` to build a kernel. There are two methods to get additional realtime capabilities:

- You can use the `setld` command to enable realtime preemption as shown in the following example:

  1. Issue the following command:

     ```
     # setld -c OSFBIN300 RT_ON
     ```

  2. Run `doconfig` without any options to generate a new configuration file. After the RT_ON operation, the configuration file will contain the entry `options RT_PREEMPT_OPT` which causes preemption to be on by default (in the appropriate lockmode).

Or, you can:

- Use a text editor of your choice to edit the `/etc/sysconfigtab` file and set the `rt-preempt-opt` parameter equal to 1 as shown in the following example:

  rt-preempt-opt=1

  After setting this parameter, you must reboot your system. When the `rt-preempt-opt` parameter is set, the system chooses the correct lockmode to support realtime preemption. On a uniprocessor system, the lockmode is set to `1`. On a multiprocessor system, the lockmode is set to `3`.

Working in the Standalone Environment 7

This chapter describes the standalone environment that is accessed from the SYSTEM MANAGEMENT option on the installation menu. This chapter describes how to:

- Invoke the standalone environment
- Access devices in the standalone environment
- Mount file systems in the standalone environment
- Restore file systems in the standalone environment
- Change the size of disk partitions in the standalone environment

7.1 What is the Standalone Environment?

The standalone environment is a combination of a virtual disk and file system environment. Part of the environment resides only in physical memory and part is mounted from a disk. This disk can be either the distribution media (CD-ROM) or a disk on the the RIS server. The primary purpose of the standalone environment, which is also known as the standalone system (SAS), is to support the initial phases of an installation, which include selecting the distribution and system devices, and restoring the root file system image to the target system disk.

The standalone environment also supports system management activities. These activities include:

- Restoring a damaged root file system
- Checking the consistency of the root file system
- Restoring the boot block image
- Performing disk maintenance operations such as changing the disk partition layout prior to performing an advanced installation

The standalone environment provides commands that help you recover from serious problems, such as root file system corruption, and enable you to perform general file system and disk maintenance tasks when no other environment is available. The standalone environment is a primitive environment and does not perform like a full operating system environment. You should perform system management activities in the standalone

environment only if you have extensive UNIX operating system experience and an operating system environment is not available.

7.2 Invoking the Standalone Environment

The type of processor that you use determines the media and the commands used to invoke the standalone environment. These media and commands are identified and described in Chapter 4.

After you boot your processor, the system displays brief installation information and a menu similar to the following.

```
***  STANDALONE SYSTEM ENVIRONMENT ***

  Select the BASIC option to install the mandatory
  software subsets for your system configuration.

  Select the ADVANCED option to display optional
  software subsets from a menu and/or customize
  system disks and partitions.

  Select the SYSTEM MANAGEMENT option to customize disk
  partitions on the system disk.

Select one of the following options:


        1) BASIC Installation
        2) ADVANCED Installation
        3) SYSTEM MANAGEMENT

Enter your choice: 3
```

To invoke the standalone environment, choose the SYSTEM MANAGEMENT option from the menu. When you choose the SYSTEM MANAGEMENT option, the system is in single-user mode and the superuser prompt (#) is displayed.

Figure 7-1 shows the DEC OSF/1 SAS file system, including those commands you need to change disk partition layouts. The boxes in the diagram denote directory files. Files not in boxes may be executable files (commands or scripts), special files, or ordinary files. An example of an executable file is `/kit/isl/disklabel` which is used to display or change disk partition tables.

The PATH shell variable is aware of the layout of the SAS file system which makes it unnecessary to specify the complete path name when executing a command. For example, `/kit/isl/disklabel` can be invoked simply by entering `disklabel`.

Figure 7-1: Partial Layout of the Standalone File System

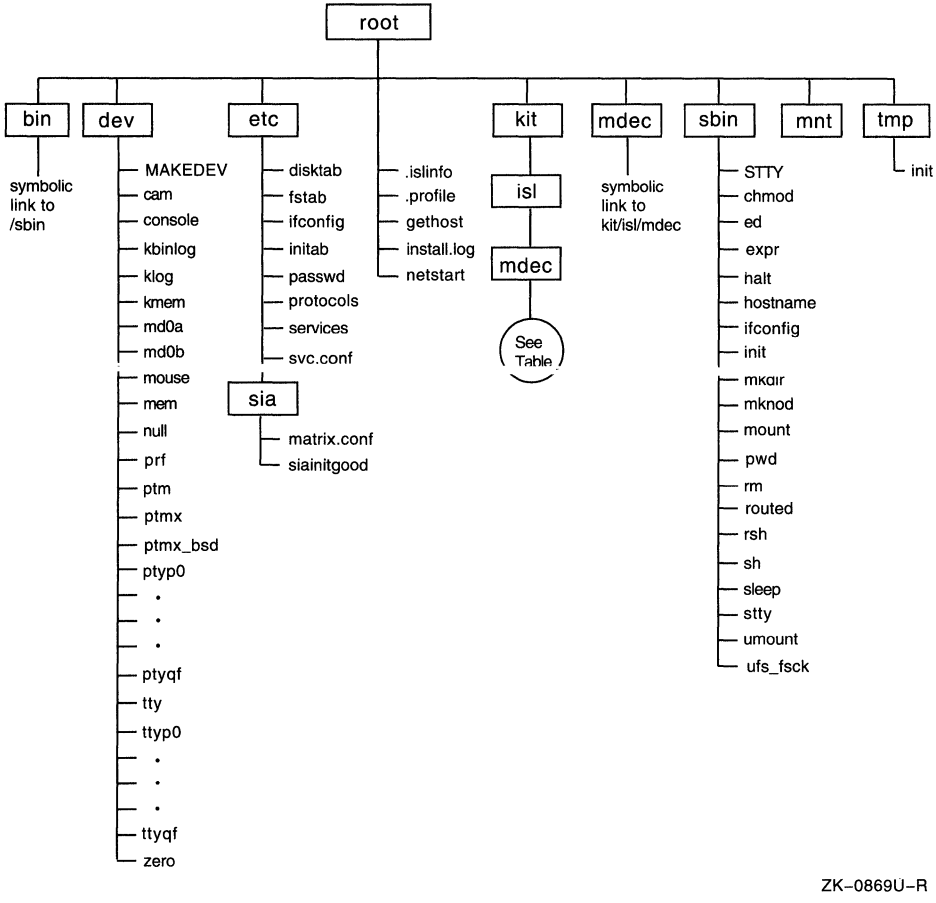

Table 7-1 lists the commands and utilities available in the `/kit/isl` directory on the standalone environment.

Table 7-1: Contents of the /kit/isl Directory

Error	depord	libscp	rcp	ufs_fsck
Lists	diff	ln	restore	updadmin
Logging	disklabel	log	rm	updeng
Pwd	disktab	lpblocker	rsh	updmore
Ready	dump	ls	scu	updpblock.dat
Strings	egrep	machine	sed	updpinfo
Ticker	finder	mdec/	setld	updpnowarn.dat
Wait	fitset	mkfdmn	sifsync	updrepack.dat
awk	fsck	mkfset	sizer	updtypechg.dat
cat	fverify	mount_advfs	sleep	vdump
cdl	getopt	mt	sort	vrestore
chgrp	install.1	mv	stlmenu	whoami
compress	install.osf	newfs	sync	
cp	installupdate	pickapart	tar	
date	kill	pwd	tclear	
dd	libmrg	radisk	udetect	

7.3 Standalone Environment Capabilities

The standalone environment is a primitive environment that lacks most of the capabilities of a full operating system environment. This environment works without a swap device and with very limited free disk space within the memory file system. These two factors mean that tasks requiring large amounts of memory that create the need to swap or tasks requiring large amounts of disk space (such as `/tmp` space) are likely to encounter failures in the standalone environment.

You can use the standalone system to perform the following tasks:

- Edit a file with the `ed` editor
- Create new file systems with the `newfs` command (for UNIX File Systems) or with the `/mkfdmn/mkfset` command (for Advanced File Systems)
- Restore file systems with the `restore` command
- Modify partition tables with the `disklabel` command before the advanced installation
- Mount other disks and file systems with the `mount` command

- Fix file systems with the `fsck` command

The commands in the `/kit` directory are exported read-only and reside in a read-only file system.

Note

The root file system in this environment is located on a virtual disk that is mounted with read-write permissions. However, any changes that you make on files that you create in `root` are volatile and will not be saved when you exit the SAS.

After performing preinstallation, system maintenance, or troubleshooting activities, you can return to the installation procedure and select the advanced or basic installation options by entering the `restart` command at the console terminal.

7.4 Accessing Devices in the Standalone Environment

Device special files must be present in the `/dev` directory to access your system's disk and tape devices. Execute `ls ./dev` to see if the required device special files exist. If these files do not exist, use the `MAKEDEV` command to create them.

For example, to create the device special file for a SCSI disk, unit number 0 (zero), execute the following commands:

1. Change to the `/dev` directory by entering:

   ```
   # cd /dev
   ```

2. Use the `MAKEDEV` command to create the disk device special file for rz0 by entering:

   ```
   # ./MAKEDEV rz0
   ```

7.5 Mounting File Systems in the Standalone Environment

The standalone environment can be used for performing maintainence operations on existing file systems. For instance, if the kernel (`vmunix`) on your `root` file system becomes damaged and you have a good backup, you can mount your `root` file system and replace the damaged kernel.

To mount an existing root file system located on `/dev/rz0a` in this environment, execute the following commands:

- Create the device special files for the disk containing the root file system:

  cd /dev

```
./MAKEDEV rz0
```

- Prepare to mount the file system.
  a. For UNIX file systems (ufs) enter:

     ```
     mount /dev/rz0a /mnt
     ```

  b. For Advanced File Systems (AdvFS) enter:

     ```
     mkdir -p /etc/fdmns/root_domain
     cd /etc/fdmns/root_domain
     ln -s /dev/rz0a
     mount root_domain#root /mnt
     ```

The existing root file system is accessible at `/mnt` and can be modified at this point.

7.6 Restoring File Systems in the Standalone Environment

The standalone environment is ideal for restoring damaged root file systems. To restore your root file system, first create the device special files for the disk on which the root file system is to reside. Next create the device special files for the tape device which contains the dump of the root file system to be restored. Create these device special files using the `MAKEDEV` command as shown in Section 7.4.

Use the `restore` command to build a new root file system as shown in this example:

1. If the disk does not have a label, which could occur if the disk was physically damaged or replaced, write the default disk partition tables and bootstrap programs. The disk partitions and bootstrap programs should be operational. To determine if the disk has a valid label, use the `disklabel` command with the following syntax:

   disklabel -r *disk*

   Use the `disklabel` command with the following syntax to write the default disk partition table:

   disklabel -rw *disk disk_type*

   The *`disk`* parameter specifies the disk that includes the device mnemonic and unit number. The *`disk_type`* parameter specifies the type of disk associated with *`disk`* as described in the `/etc/disktab` file.

For example, to write the default disk partition tables on an RZ57 disk, unit 0, enter the following command:

```
# disklabel -rw rz0 rz57
```

Note

The `disklabel` command used in this procedure writes the default disk partition tables to the disk. Writing a label with customized partition table settings may affect the entire disk. If the disk you are restoring has customized partition table settings, invoke the editing option of the `disklabel` command. Refer to *System Administration* or to `disklabel`(8) for more information.

2. Create a new root file system by using the following command syntax:

   newfs *raw_device*

   The *raw_device* parameter specifies the full raw device path name of the disk device on your system. For example, to create a new file system on an RZ57, unit 0, enter the following command:

   ```
   # newfs /dev/rrz0a rz57
   ```

3. Mount the file system by using the following command syntax:

   mount *block_device* **/mnt**

   In the previous example, the `/mnt` directory must be created if it does not already exist (directories are created using the `mkdir` command). The *block_device* parameter specifies the full block device path name of the disk device. For example, to mount the file system created in the previous step, enter the following command:

   ```
   # mount /dev/rz0a /mnt
   ```

4. Next, restore the file system. If you are restoring dump files from a local file system, change to the `/mnt` directory, insert the medium containing the dump file, and enter the `restore` command with the following command syntax:

   restore -Yrf *dumpfile*

   The *dumpfile* parameter specifies the path name of the file containing the dump data. For a tape, enter the following commands:

```
# cd /mnt
# restore -Yrf /dev/rmt0h
```

You can use the standalone environment to restore other file systems. However, the environment's limitations (see Section 7.3 for more information) may cause failures during the restore. Digital recommends performing file system restores from a full operating system environment. If such an environment is unavailable due to the need to restore `/var` and/or `/usr`, you should boot your system to single user mode using your existing or restored root file system. In the single user mode, more disk space is available, and swap space can be made available by issuing the following command:

```
# swapon -a
```

7.7 Changing the Size of the Disk Partition

You use the `disklabel` command to change the drive identification or the disk partitions on the drive or to replace a damaged label or bootstrap.

Note

You must be experienced with using the `ed` editor when using the `disklabel` command in the standalone environment.

To look at the existing disk partition layout, enter the `disklabel` command in the following format and replace the variable *n* with the unit number of the disk. For example, to look at the existing disk partition layout of an RZ disk, enter the following command:

disklabel -r /dev/rz*n*

In the previous example, *n* is the unit number of the disk. The system displays the existing disk partition layout.

To change the size of the disk partition, complete the following steps. The following example uses an `rz26` disk, unit number `0`. In this example, the size of the `b` partition is decreased and the size of the `g` partition is increased to include the space no longer being used by the `b` partition.

1. Change to the `/dev` directory:

   ```
   # cd /dev
   ```

2. Use the `MAKEDEV` command to create the disk device special files for

rz0:

```
# ./MAKEDEV rz0
```

3. Check the disk label information on rz0:

```
# disklabel -r rz0
```

If there is no label, the following message is displayed:

```
Bad pack magic number (label is damaged, or pack is unlabeled)
```

To label the disk with the default partitions, enter the following command:

```
# disklabel -rw rz0 rz26
```

Note

The kernel device drivers do not allow the size of a disk partition to be decreased or the offset of a partition to be changed while it is open. Some device drivers create a label containing only a single large partition if a disk is unlabeled; thus the label must be written to the a or c partition of the disk while it is open. This sometimes requires the desired label to be set in two steps, the first one creating at least one other partition, and the second setting the label on the new partition while shrinking the a partition.

4. Set the EDITOR environment variable to use the ed editor:

```
# EDITOR=ed
export EDITOR
```

5. Edit the disk label for rz0:

```
# disklabel -e rz0
```

6. Display the disk label by entering the following command:

```
1,$p
```

7. Search for the b partition by entering the following command:

```
/b:
```

Information similar to the following is displayed:

```
b:  262144  131072  unused  1024  8192  #  (Cyl. 164*- 402*)
```

8. Change the size of the b partition from 262144 sectors to 131072 sectors

by entering the following command:

```
s/262144/131072/p
```

This reduces the size of the b partition from 128 MB to 64 MB.

The revised information is displayed:

```
b:  131072  131072  unused  1024  8192  # (Cyl. 164*- 492)
```

Note

There is no need to modify cylinder information; cylinder information is automatically modified when you save and exit the file.

9. Search for the g partition by entering the following command:

   ```
   /g:
   ```

   Information similar to the following is displayed:

   ```
   g:  819200  393216  unused  1024  8192   # (Cyl. 492*- 1519*)
   ```

10. Because the size of the b partition was reduced by 131072 sectors, the size of the g partition should be increased by 131072 sectors. Change the size of the g partition from 819200 sectors to 950272 sectors by entering the following command:

    ```
    s/819200/950272/p
    ```

    This increases the size of the g partition from 400 MB to 464 MB.

11. Change the offset of the g partition by entering the following command:

    ```
    s/393216/262144/p
    ```

    The revised information is displayed:

    ```
    g: 950272  262144  unused  1024  8192  # (Cyl. 492*- 1519*)
    ```

12. To verify your changes, redisplay the disk label by entering the following command:

    ```
    1,$p
    ```

13. Save your edits and quit the editor by entering the following command:

    ```
    wq
    ```

    The system prompts if you want to write the new label. If you are satisfied with your changes, press Return to accept the default answer, y.

    ```
    Write new label? [y] Return
    ```

14. Display the newly customized disk by entering the following command:

```
# disklabel -r rz0
```

15. Restart the installation by typing `restart`.

    The system displays the following installation menu. Choose the Advanced Installation option by entering the number 2 at the prompt. If you choose the Basic Installation option, the changes you made to the disk label will be lost because the default partitions are always used on the disk selected as the system disk.

```
***  STANDALONE SYSTEM ENVIRONMENT ***

  Select the BASIC option to install the mandatory
  software subsets for your system configuration.

  Select the ADVANCED option to display optional
  software subsets from a menu and/or customize
  system disks and partitions.

  Select the SYSTEM MANAGEMENT option to customize disk
  partitions on the system disk.

Select one of the following options:

        1) BASIC Installation
        2) ADVANCED Installation
        3) SYSTEM MANAGEMENT

Enter your choice: 2
```

7.8 Using a Disk That Contains ULTRIX Partition Information

Any disk that was in use under ULTRIX will have a partition table. In such cases, the `disklabel` command displays the ULTRIX partition information and gives you the following options:

- To create a disk label based on the contents of the ULTRIX partition table
- To create a disk label based on the default DEC OSF/1 partition information found in `/etc/disktab`

The following is an example of the ULTRIX partition table display:

```
ULTRIX compatible partition data found.
This data may be different than the standard
partition layout information in /etc/disktab.

ULTRIX partition table layout is:
partition     bottom        top        size     overlap
    a              0      32767      32768     c
    b          32768     163839     131072     c
    c              0    2050859    2050860     a,b,d,e,f,g,h
    d         163840     792845     629006     c,g
    e         792846    1421851     629006     c,g,h
    f        1421852    2050859     629008     c,h
    g         163840     983039     819200     c,d,e
    h         983040    2050859    1067820     c,e,f
Use the ULTRIX-style partition data? [y]: n
```

If you want to preserve the ULTRIX partition data, enter `y` at the prompt; otherwise, enter `n`.

If you changed the partition data, the installation procedure recognizes the changes to the disk label and prompts if you want to use the customized partition layout or the default layout. To preserve your changes, choose the customized partition layout.

The *System Administration* manual provides an example of how to use the standalone environment to restore the root file system after a catastrophic event has occurred.

To exit from the standalone environment and to halt the processor, type `halt` and press Return. To exit from the standalone environment and return to the Installation menu, enter `restart`.

Installing Software Subsets After the Installation 8

This chapter describes how to use the `setld` command to install additional software subsets after the system installation procedure completes. You can use the `setld` command to perform the following software management tasks:

- Display an inventory of subsets or files within a subset
- Install or remove software subsets
- Perform node-specific subset configuration
- Verify subset installation

You can find a detailed technical explanation of the `setld` command functions in the *Programming Support Tools* manual.

8.1 Using the setld Command

The syntax of the `setld` command is as follows:

setld [**–D** *root-path*] **–c** *subset-id message*

setld [**–D** *root-path*] **–d** *subset-id* [*subset-id...*]

setld [**–D** *root-path*] **–i** [*subset-id* [*subset-id...*]]

setld [**–D** *root-path*] **–l** *location* [*subset-id* [*subset-id...*]]

setld [**–D** *root-path*] **–v** *subset-id* [*subset-id...*]

The following table provides brief descriptions of the `setld` command's options:

Option	Description
–D	In conjunction with any other option, specifies an alternative root directory. For example: `# setld -D /usr/doctools -i`

Option	Description
	The directory specified must be the root directory of an entire system hierarchy. Do not attempt to use this option to place software in a directory that is not a system root.
–l	Loads the software kits that are in the specified location; if subsets are specified, only the named subsets are installed. For example: `# setld -l /mnt/ALPHA/BASE DNABASE100`
–c	Runs the configuration phase of the named subset's subset control program. Refer to the document supplied by your software vendor for the command syntax. For example: `# setld -c DNABASE100 INSTALL`
–i	Displays a list of subsets and their installation status. If a subset is named, displays a list of that subset's contents. For example: `# setld -i OSFMANOS300`
–v	Runs the named subset's Installation Verification Procedure (IVP). For example: `# setld -v OSFMANOS300`
–d	Deletes the named subset or subsets. For example: `# setld -d OSFMANOS300 OSFMANOP300`

To list all the options available for the `setld` command, use the –h option:

```
# setld -h
```

8.2 Displaying Subset Inventories

You can use the `setld` command to display an inventory of the subsets recognized by your system, showing the status (installed or not installed) of each subset.

To display a subset inventory, use the `setld –i` command with the following syntax:

/usr/sbin/setld [**–D** *root_path*] **–i** [*subset-id subset-id...*]

The following command shows the status of the software subsets:

```
# /usr/sbin/setld -i
Subset        Status     Description
------        ------     -----------
OSFACCT300 incomplete System Accounting Utilities (System Administration)
OSFAFM300             Adobe Font Metric Files (Printing Environment)
OSFBASE300 installed  Base System (- Required -)
OSFBIN300  installed  Standard Kernel Objects (Kernel Build Environment)
   •
   •
   •
```

If you use the –i option to specify a subset, the `setld` command displays a list of the files in the specified subset. This is useful if you want to determine which subset you need to reload or delete if a particular file is damaged or deleted.

The following command displays the files in the OSFCLINET300 subset:

```
# /usr/sbin/setld -i OSFCLINET300
  ./etc/.new..acucap
  ./etc/.new..hosts
  ./etc/.new..hosts.equiv
   •
   •
   •
  ./usr/sbin/arp
  ./usr/sbin/bindsetup
  ./usr/sbin/fddi_config
   •
   •
   •
```

Use the –D option to specify a root directory other than the system root.

8.3 Installing a Software Subset

This section describes how to install software subsets from a specified location. To install a software subset, log in as root and use the `setld –l` command with the following syntax:

/usr/sbin/setld [**–D** *root_path*] **–l** *location* [*subset-id* [*subset-id...*]]

The *location* variable specifies the location of the software subset that you want to install. You can specify the following *location* variables:

hostname:
Specifies the name of the remote host.

directory
Specifies the disk distribution directory.

The *subset-id* variable specifies the name of the subset. If you do not specify a *subset-id* variable, a list of subsets is displayed, allowing you to choose the ones to install. If you specify one or more *subset-id* variables, only those subsets are installed.

To install subsets from CD–ROM, use the following procedure. The distribution path given in the following examples is for the DEC OSF/1 base operating system CD–ROM. For other distribution kits, refer to the document supplied by your software vendor.

1. Place your CD–ROM optical disc in its caddy and insert the CD–ROM into the disc drive.
2. To determine what drive the CD–ROM device is located on, enter the following command as superuser:

   ```
   # file /dev/rrz*c
   ```

   Information from the `file` command is displayed. For example:

```
/dev/rrz1c: character special (8/1026) SCSI #0 RZ25 disk #8 (SCSI ID #1)
/dev/rrz2c: character special (8/2050) SCSI #0 RZ25 disk #16 (SCSI ID #2)
/dev/rrz3c: character special (8/3074) SCSI #0 RZ26 disk #24 (SCSI ID #3)
/dev/rrz4c: character special (8/4098) SCSI #0 RRD42 disk #32 (SCSI ID #4)
```

   In this output from the `file` command, RRD indicates the CD–ROM device.
3. To mount the distribution media, enter the following command. The following example shows the CD–ROM device is located on the `c` partition of the `rz4` disk:

   ```
   # mount -r /dev/rz4c /mnt
   ```

4. To install a DEC OSF/1 base subset, enter:

   ```
   # setld -l /mnt/ALPHA/BASE
   ```

5. The `setld` command displays a numbered list of subset titles and prompts you to enter the number of the subsets you want to install. As shown in the following example, only the subsets not yet installed on

your system are displayed in the list.

```
The subsets listed below are optional:

There may be more optional subsets than can be presented on a
single screen. If this is the case, you can choose subsets
screen by screen or all at once on the last screen. All of the
choices you make will be collected for your confirmation before
any subsets are installed.

 - General Applications:
     1) Computer Aided System Tutor
     2) Logical Volume Manager
     3) UNIX(tm) SVID2 Compatibility
     4) UNIX(tm) to UNIX(tm) Copy Facility

 - Reference Pages:
     5) Ref Pages: Admin/User
     6) Ref Pages: Programming
     7) Ref Pages: Realtime
     8) Ref Pages: Windows Admin/User
     9) Ref Pages: Windows Programming

 - Software Development:
    10) Additional Motif Demo Sources
    11) CDA(tm) for X/Motif Development
    12) DEC C (cc -migrate)
    13) GNU Revision Control System
    14) Realtime Software Development

 - Supplemental Documentation:
    15) XIE Version 5 Online Documentation

 - System Administration:
    16) C2-Security GUI
    17) Obsolete Locale databases

Or you may choose one of the following options:

    18) ALL of the above
    19) CANCEL selections and redisplay menus
    20) EXIT without installing any subsets

Enter your choices or press RETURN to redisplay menus.

Choices (for example, 1 2 4-6): 5-9
```

6. Enter the number or numbers associated with the subsets that you want to install. There may be more subsets presented in the menu than can be displayed on a single screen. You can either select subsets in each screen, or select them all together on the last screen. If you select subsets as each screen is displayed, all your choices are presented for you to confirm on the final screen. You can also change your choices or redisplay the subset options.

7. After you enter your choices, the following confirmation message is displayed:

```
You are installing the following optional subsets:

 - Reference Pages:
        Ref Pages: Admin/User
        Ref Pages: Programming
        Ref Pages: Realtime
        Ref Pages: Windows Admin/User
        Ref Pages: Windows Programming

Is this correct? (y/n):
```

8. After you confirm your choice, messages similar to the following display as the subsets are loaded and configured:

```
Checking file system space required to install selected subsets:
        Working....Fri Jul 22 11:08:02 EDT 1994

File system space checked OK.

Ref Pages: Windows Programming
   Copying from /mnt/ALPHA/BASE (disk)
        Working....Fri Jul 22 11:08:36 EDT 1994
   Verifying

Ref Pages: Windows Admin/User
   Copying from /mnt/ALPHA/BASE (disk)
   Verifying

Ref Pages: Programming
   Copying from /mnt/ALPHA/BASE (disk)
        Working....Fri Jul 22 11:10:06 EDT 1994
   Verifying

Ref Pages: Admin/User
   Copying from /mnt/ALPHA/BASE (disk)
        Working....Fri Jul 22 11:11:06 EDT 1994
   Verifying

Ref Pages: Realtime
   Copying from /mnt/ALPHA/BASE (disk)
   Verifying

Configuring "Ref Pages: Windows Programming " (OSFMANWOP300)

Configuring "Ref Pages: Windows Admin/User " (OSFMANWOS300)

Configuring "Ref Pages: Programming " (OSFMANOP300)

Configuring "Ref Pages: Admin/User " (OSFMANOS300)

Configuring "Ref Pages: Realtime " (OSFMANRT300)
```

9. After the subsets are installed, unmount the distribution media.

```
# umount /mnt
```

Note

If there are upgrades to the subsets you installed previously, you may need to install these upgrade subsets. To perform an upgrade, enter the following command:

```
# setld -l /mnt/ALPHA/UPDATE
```

To install Digital software subsets on Remote Installation Services (RIS) clients, refer to *Sharing Software on a Local Area Network.*

Loading and Inserting a DEC OSF/1 Compact Disc A

This appendix provides information about loading a DEC OSF/1 Compact Disc (CD-ROM). It describes the following:

- Loading a disc into a caddy
- Inserting and removing a disc from a disc drive

Note

The software subsets contained on the DEC OSF/1 CD–ROM are documented in Appendix B and Appendix C.

Before you insert a CD–ROM into its drive, make sure you know how to operate the disc drive. The *Optical Disc Drive Owner's Manual* for each type of drive contains instructions for using the disc drive.

A.1 Loading a Disc into a Caddy

The disc accompanying must be loaded into a caddy before it can be inserted into an RRD42, RRD43, or RRD44 disc drive. Follow these steps to load a disc into a caddy:

1. If a protective film is on the caddy, remove the film before using the caddy.
2. Press the tabs on both sides of the caddy and lift the lid.
3. Remove the disc from its packaging. Hold the disc by the edge.
4. Place the disc in the caddy, making sure that the labeled side faces up.
5. Close the lid of the caddy by pressing both corners down firmly.

Figure A-1 shows how to press the tabs of the caddy and lift the lid:

Figure A-1: Pressing Tabs and Lifting Lid of a CD-ROM Caddy

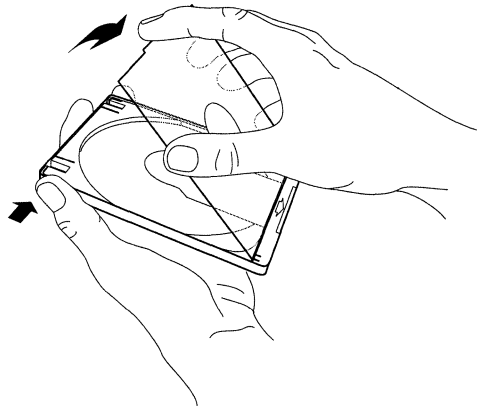

ZS-0443-MH

Figure A-2 shows how to place the disc in the caddy:

Figure A-2: Placing A Disc in a CD-ROM Caddy

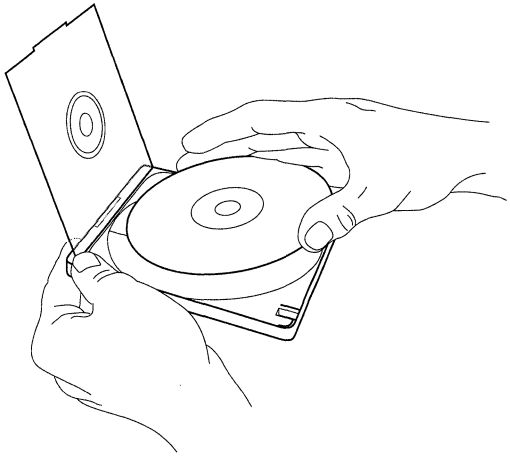

ZS-0444-MH

A.2 Inserting and Removing a Disc from a Drive

Follow these steps to insert a disc caddy into a disc drive:

1. Insert the caddy into the slot in the disc drive. The disc label should be facing up.
2. Push the caddy in until it stops.

Figure A-3 shows a disc (in its caddy) being inserted into a disc drive:

Figure A-3: Inserting a CD-ROM into a Disc Drive

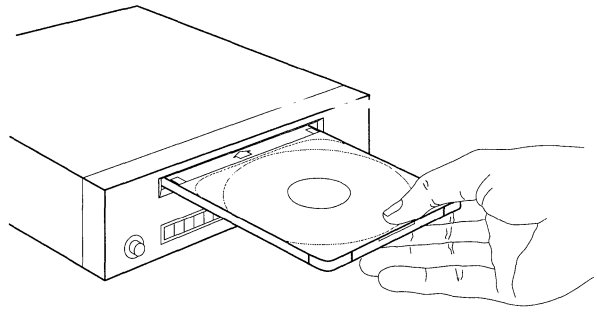

ZS-0445-MH

To remove a disc caddy from a disc drive, press the EJECT button on the drive.

If the EJECT button is disabled by software, or if the drive does not eject the caddy after you press the EJECT button, refer to the *Optical Disc Drive Owner's Manual* for instructions.

Note

Before you can eject a CD–ROM from the disc drive, you must first unmount it using the `umount` command as shown in the following example:

umount /dev/rz4c

Software Subsets B

This appendix describes the DEC OSF/1 software subsets. To help you decide which subsets to install, the software is divided into separate categories: mandatory and optional.

At installation time, the mandatory subsets are installed during the basic and the advanced installations. The optional subsets are not offered during the basic installation, but you can install them after the installation. If you do an advanced installation, you can install the optional subsets during the installation or at a later time. See Chapter 8 for information on using the `setld` utility to install subsets after the installation.

The mandatory subsets are described in Section B.1.

The optional subsets are described in Section B.2.

B.1 Mandatory Subsets

The mandatory subsets are installed automatically for both the basic and advanced installations.

The Base System and the Base System–Hardware Support subsets cannot be deleted once they are installed.

The Standard Kernel Objects, the Kernel Header and Common Files, the Hardware Kernel Objects, and the Compiler Back End subsets contain object files needed to build the standard kernel. You can delete these subsets by using the `setld -d` command to reclaim disk space after the kernel is built. However, you will not be able to rebuild your kernel. If you need to rebuild your kernel for any reason, you must reinstall the subsets with the `setld -l` command.

Table B-1 describes the subsets in this category.

Table B-1: Description of the Mandatory Subsets

Title and Contents	Subset Name	Dependencies
Adobe Fonts This subset contains the Type1 fonts and the Adobe font metrics files supplied by Adobe Systems Incorporated to be used by the DPS extension of the server. It also contains the `.upr` file, which defines these fonts and their location for the DPS extension of the server.	OSFDPSFONT300	
Base System This subset includes fundamental utilities and data files for the DEC OSF/1 operating system. The Base System includes the editors and many of the general-purpose programs.	OSFBASE300	Required for all subsets. This subset cannot be deleted.
Base System–Hardware Support This subset provides the hardware-dependent portion of the BASE subset.	OSFHWBASE300	Required for all subsets. This subset cannot be deleted.
Basic Networking Services This subset contains the software required to provide services over the network using the TCP/IP protocols. These services include remote login (`rlogin`) and Network Time Protocol (`xntp`).	OSFCLINET300	Required for Local Area Transport (LAT), NFS Utilities, and Additional Networking Services
Basic X Environment This subset provides programs required for X11/DECwindows and includes Bookreader.	OSFX11300	

Table B-1: (continued)

Title and Contents	Subset Name	Dependencies
Compiler Back End C Language Compiler. This subset provides the minimum level of C language support required to build operating system kernels. This subset must be used in conjunction with the Software Development Environment subset for C language software development.	OSFCMPLRS300	Required for Kernel Header and Common Files, Software Development Environment, and selected language layered products
DECwindows 100dpi Fonts This subset provides workstation font files for systems using either the VR160 15-inch monitor or higher resolution graphics (1280 x 1024).	OSFFONT15300	
Hardware Kernel Objects This subset provides hardware-dependent kernel object, header, and data files.	OSFHWBIN300	Requires Kernel Header and Common Files
Kernel Header and Common Files This subset provides the common kernel object header and data files that together with the Standard Kernel Objects and Hardware Kernel Objects subsets, allow you to configure and build the kernel.	OSFBINCOM300	Requires Compiler Back End Required for Standard Kernel Objects, Hardware Kernel Objects, and Local Area Transport (LAT)
NFS(tm) Utilities This subset provides the software required to mount remote file systems, using the Network File System (NFS).	OSFNFS300	Requires Basic Networking Services

Table B-1: (continued)

Title and Contents	Subset Name	Dependencies
Standard Kernel Objects This subset contains hardware-independent kernel object, header, and data files.	OSFBIN300	Required to build DEC OSF/1 kernels Requires Kernel Header and Common Files
X Fonts This subset provides X11 fonts from the X Consortium compiled for the DEC X server.	OSFMITFONT300	
X Servers This subset provides X11/DECwindows server support. A DECwindows server is the software that provides windowing on a workstation.	OSFSER300	

B.2 Optional Subsets

The optional subsets contain software that supports a variety of applications. If you choose the basic installation procedure, these subsets are not available during the installation, but can be installed after the installation completes by using the `setld` command. If you choose the advanced installation, you can select these subsets at installation time.

The optional subsets can be deleted after they are installed. Be aware that some optional subsets are dependent upon other subsets. For example, the Doc. Preparation Tools Extensions subset requires the Doc. Preparation Tools subset; therefore, if you delete the Doc. Preparation Tools subset, the Doc. Preparation Tools Extensions subset will not work.

The following is a list of the optional subset categories. Locate the category in which you are interested and refer to the corresponding table for subset descriptions.

- General Applications – Table B-2
- Kernel Build Environment– Table B-3
- Mail Applications – Table B-4

- Network-Server/Communications – Table B-5
- Printing Environment – Table B-6
- Reference Pages – Table B-7
- Software Development – Table B-8
- Supplemental Documentation – Table B-9
- System Administration – Table B-10
- Text Processing – Table B-11
- Windowing Environment – Table B-12
- Windows Applications – Table B-13
- Worldwide Language Support – Table B-14

B.2.1 General Applications Subsets

Table B-2 describes the subsets in this category.

Table B-2: Description of the General Applications Subsets

Title and Contents	Subset Name	Dependencies
Common Agent This subset contains the Digital Common Agent Utilities.	OSFCOMAGENT300	
Computer Aided System Tutor This subset provides computer-aided instruction courses and practice in the use of the DEC OSF/1 operating system.	OSFLEARN300	
GNU Emacs The GNU Emacs editor is an advanced, self-documenting, extensible, real-time display text editor that can be customized.	OSFEMACS300	

Table B-2: (continued)

Title and Contents	Subset Name	Dependencies
Local Area Transport (LAT) Local Area Transport (LAT) is a protocol that provides a means of logically connecting terminal servers to one or more nodes on the same local area network (LAN). LAT software has the features required for a host to function as a service node, so requests for connections can be made by server users.	OSFLAT300	Requires Kernel Header and Common Files and Basic Networking Services
Logical Storage Manager This subset contains the LSM administrative commands and tools to manage an LSM configuration.	OSFLSMBASE300	Requires LSM Kernel Build Objects (OSFLSMBIN300)
Logical Storage Manager Graphical User Interface This subset contains the LSM Motif-based graphical user interface management tool and related utilities.	OSFLSMX11300	Requires Base System, OSFLSMBASE300, and OSFLSMBIN300
Logical Volume Manager The Logical Volume Manager (LVM) is a subset that is composed of physical devices and logical (virtual) entities to offer you a mechanism for transparently and dynamically storing and retrieving files and file systems across multiple devices and in multiple copies.	OSFLVM300	
UNIX SVID2 Compatibility This subset brings the DEC OSF/1 system into compliance with the Base System and Kernel Extensions of the System V Interface Definition Issue 2 (SVID2). It also adds a higher degree of compatibility with the Basic Utilities Extensions of SVID2.	OSFSVID2300	

Table B-2: (continued)

Title and Contents	Subset Name	Dependencies
UNIX to UNIX Copy Facility This subset provides programs and data files needed for a system to participate in a network of machines using the UUCP facility. This facility transmits files over serial communications lines.	OSFUUCP300	

B.2.2 Kernel Build Environment Subsets

Table B-3 describes the subsets in this category.

Table B-3: Description of the Kernel Build Environment Subsets

Title and Contents	Subset Name	Dependencies
Hardware Kernel Header and Common Files This subset contains the binary common files that are hardware specific. This subset supports uniprocessor, symmetric multiprocessing (SMP), and realtime configurations.	OSFHWBINCOM300	Requires Kernel Header and Common Files
Logical Storage Manager Kernel Header and Common Files This subset contains the LSM kernel include files to build LSM with the kernel. This subset supports uniprocessor, SMP, and realtime configurations.	OSFLSMBINCOM300	Requires Compiler Back End
Logical Storage Manager Kernel Build Objects This subset provides the kernel objects to build the kernel with LSM drivers. This subset supports uniprocessor, SMP, and realtime configurations.	OSFLSMBIN300	Requires Kernel Header and Common Files and OSFLSMBINCOM300

Table B-3: (continued)

Title and Contents	Subset Name	Dependencies
POLYCTR AdvFS Kernel Objects This subset contains program and data files for the POLYCENTER Advanced File System (AdvFS). This subset supports uniprocessor, SMP, and realtime configurations.	OSFADVFSBIN300	

B.2.3 Mail Applications Subsets

Table B-4 describes the subsets in this category.

Table B-4: Description of the Mail Applications Subsets

Title and Contents	Subset Name	Dependencies
DECwindows Mail Interface This subset provides the DECwindows mail application for `dxmail`.	OSFXMAIL300	Requires RAND Corp. Mail Handler (MH) and OSFDECW300, Additional DECwindows Applications
RAND Corp. Mail Handler (MH) This subset provides programs that constitute the RAND Corporation MH mail reader interface.	OSFMH300	Required for DECwindows Mail Interface

B.2.4 Network-Server/Communications Subsets

Table B-5 describes the subsets in this category.

Table B-5: Description of the Network-Server/Communications Subsets

Title and Contents	Subset Name	Dependencies
Additional Networking Services This subset contains the software that provides the networking services; Berkeley Internet Name Domain (BIND) and Network Information Services (NIS).	OSFINET300	Requires Basic Networking Services Required for Remote Installation Services (RIS) and Dataless Management Services (DMS)
Dataless Management Service This subset provides the software needed to run Dataless Management Services. The OSF-SVR PAK is required.	OSFDMS300	The server requires Hardware Kernel Objects, LSM Kernel Objects, Standard Kernel Objects, AdvFS Kernel Objects, and Additional Networking Services.
Remote Installation Services This subset provides services that allow network installations of the operating system and applications. The Product Authorization Key (PAK), OSF-SVR is required.	OSFRIS300	Requires Additional Networking Services

B.2.5 Printing Environment Subsets

Table B-6 describes the subsets in this category.

Table B-6: Description of the Printing Environment Subsets

Title and Contents	Subset Name	Dependencies
Adobe Font Metric Files This subset contains font metrics (character bounding box, width, name, ligature, kerning, and font properties) for PostScript outline fonts used by text formatting applications on PostScript output devices.	OSFAFM300	
Local Printer Support This subset provides printer commands such as `lpr`, `lpq`, and `lpd`; utilities; configuration files; filters; and PostScript printer support.	OSFPRINT300	

B.2.6 Reference Pages Subsets

Table B-7 describes the subsets in this category.

Table B-7: Description of the Reference Pages Subsets

Title and Contents	Subset Name	Dependencies
Ref Pages: Admin/User This subset provides the online reference pages for system administrators and general users.	OSFMANOS300	Requires Doc. Preparation Tools
Ref Pages: Programming This subset provides the online reference pages for programmers.	OSFMANOP300	Requires Doc. Preparation Tools

Table B-7: (continued)

Title and Contents	Subset Name	Dependencies
Ref Pages: Realtime This subset provides the online reference pages for the Realtime kernel.	OSFMANRT300	Requires Doc. Preparation Tools
Ref Pages: Windows Admin/User This subset provides the online reference pages for windows administrators and users.	OSFMANWOS300	Requires Doc. Preparation Tools
Ref Pages: Windows Programming This subset provides the online reference pages for windows programmers.	OSFMANWOP300	Requires Doc. Preparation Tools

B.2.7 Software Development Subsets

Table B-8 describes the subsets in this category.

Table B-8: Description of the Software Development Subsets

Title and Contents	Subset Name	Dependencies
CDA Software Development The CDA Software Development environment provides C header files that enable programmer access to the CDA Base Services run-time libraries.	OSFCDAPGMR300	Requires Software Development Environment
DEC C Compiler This subset contains the DEC C compiler executable.	OSFDECC300	
LSM Software Development This subset contains the LSM include files.	OSFLSMPGMR300	

Table B-8: (continued)

Title and Contents	Subset Name	Dependencies
CDA for X/Motif Development This subset provides a developer's environment for X11/DECwindows CDA architecture.	OSFXCDADEV300	Requires X Window Software Development
GNU Revision Control System This subset contains programs that make up the UNIX Revision Control System (RCS), which provides a regulation mechanism for large software projects.	OSFRCS300	
Realtime Software Development This subset provides libraries and utilities useful for real-time software development.	OSFRTDEV300	
Software Development Environment This subset provides libraries and utilities useful for software development. These include the libraries for linking programs to be analyzed with the `dbx` debugger, the `lint` program verifier, and the `lex` and `yacc` parser packages.	OSFPGMR300	Requires Compiler Back End Required for CDA Software Development
Source Code Control System This subset contains programs that make up the UNIX Source Code Control System (SCCS), which provides a regulation mechanism for large software projects.	OSFSCCS300	
X Window Software Development This subset provides the library and data files needed to produce X/Motif Window System client applications. This subset also includes example programs demonstrating how to get started.	OSFXDEV300	Required for CDA for X/Motif Development

Table B-8: (continued)

Title and Contents	Subset Name	Dependencies
Additional Motif Demo Sources This subset provides demonstration programs for many Motif features and programming techniques. It contains sources from OSF/Motif V1.2 and sources that demonstrate the use of the extended Motif widget set supplied by Digital.	OSFMOTDEM300	Requires OSFBASE300 Base System

B.2.8 Supplemental Documentation Subset

Table B-9 describes the subset in this category.

Table B-9: Description of the Supplemental Documentation Subset

Title and Contents	Subset Name	Dependencies
XIE Version 5 Online Documentation This subset provides compressed PostScript files of documents for the X Window System Image Extension (XIE) Version 5.0 software.	OSFXIEDOC300	

B.2.9 System Administration Subsets

Table B-10 describes the subsets in this category.

Table B-10: Description of the System Administration Subsets

Title and Contents	Subset Name	Dependencies
C2-Security This subset provides additional configurable system security features such as identification, authentication and audit.	OSFC2SEC300	

Table B-10: (continued)

Title and Contents	Subset Name	Dependencies
Kernel Debugging Tools This subset provides tools for analyzing and debugging kernels.	OSFKTOOLS300	
Obsolete Commands and Utilities This subset contains the commands and utilities that are no longer supported for DEC OSF/1 Version 3.0.	OSFOBSOLETE300	
POLYCTR advfs System Administration commands required for creating and managing the Advanced File System.	OSFADVFS300	
System Accounting Utilities This subset provides programs and data files needed to perform system accounting. This subset contains log files that grow automatically.	OSFACCT300	
System Exercisers This subset provides programs that help in diagnosing problems with hardware and peripheral devices.	OSFEXER300	
Verifier/Exerciser GUI This subset provides the graphical user interface for the Verifier/Exerciser Tool subset. This subset includes the DEC VET Motif interface.	OSFXVET300	Requires OSFVET300, Verifier/Exerciser
Verifier/Exerciser Tool This subset provides exercisers and utilities to enhance the serviceability of the system, including the Verifier and Exerciser Tool (VET).	OSFVET300	

Table B-10: (continued)

Title and Contents	Subset Name	Dependencies
C2-Security GUI This subset provides the graphical user interface for the C2 Security subset.	OSFXC2SEC300	Requires OSFC2SEC300, C2-Security

B.2.10 Text-Processing Subsets

Table B-11 describes the subsets in this category.

Table B-11: Description of the Text Processing Subsets

Title and Contents	Subset Name	Dependencies
Doc. Preparation Tools This subset provides tools to format, manage, and display reference pages, including the `nroff` formatter and required macros.	OSFDCMT300	Required for all reference page subsets
Doc. Preparation Tools Extensions This subset contains additional `nroff` macro packages, bibliography tools, and `roff` tools.	OSFDCMTEXT300	Requires Doc. Preparation Tools

B.2.11 Windowing Environment Subsets

Table B-12 describes the subsets in this category.

Table B-12: Description of the Windowing Environment Subset

Title and Contents	Subset Name	Dependencies
DECwindows 75dpi Fonts This subset provides fonts for X11/DECwindows and is needed for specific layered products and low resolution (1024 x 768) monitors.	OSFFONT300	

Table B-12: (continued)

Title and Contents	Subset Name	Dependencies
X Customizations for OEM This subset contains X Window customizations and special logo information for use by specific OEM's when they install DEC OSF/1 . This subset is not available for general use.	OSFXOEM300	

B.2.12 Windows Applications Subsets

Table B-13 describes the subsets in this category.

Table B-13: Description of the Windows Applications Subsets

Title and Contents	Subset Name	Dependencies
Additional DECwindows Applications This subset provides additional X11/DECwindows client applications, such as Calendar.	OSFDECW300	
Additional X Applications This subset contains the X Consortium X11 R5 client applications.	OSFXMIT300	

B.2.13 Worldwide Language Support Subsets

Table B-14 describes the subsets in this category.

Table B-14: Description of the Language Support Subsets

Title and Contents	Subset Name	Dependencies
Retired Locales This subset contains obsolete locale databases and should be installed only if you are running applications that require internationalization support and were built on DEC OSF/1 V1.2 or DEC OSF/1 V1.3 systems.	OSFCTABLOC300	
Single-Byte European Locales This subset provides basic internationalization and localization information for 21 Western European locales.	OSFEURLOC300	

Additional Subsets C

This appendix describes the additional subsets that are shipped on the DEC OSF/1 Version 3.0 CD–ROM. Check the DEC OSF/1 *Release Notes* for any additional subset information. Subset sizes are listed in the *Release Notes*.

Table C-1 lists the additional subsets that can be installed from `/mnt/ALPHA`:

Table C-1: Additional Software Subsets

Product Directory	Description	Subset Name
`ADA`	DEC ADA Run-Time Support Library for DEC OSF/1 AXP Systems	ADALIB321
`ATOM`	ATOM Program Analysis Tools	ATMBASE300
`COMPILERS`	Development Enhancements for DEC OSF/1 AXP Systems - Software Development	CMPDEVENH300
`DECLADEBUG`	DECLadebug debugger DECLadebug debugger remote server	LDBBASE309 LDBSRV309
`DEC_C++_RTL`	DEC C++ RTL (shared libraries)	CXXSHRDA201
`DEC_Cobol_RTL`	DEC Cobol Run-Time Support Library for DEC OSF/1 AXP Systems DEC Decimal Run-Time Support Library	DCARTL110 02ABASE110
`DEC_Fortran_RTL`	DEC Fortran for DEC OSF/1 AXP Run-Time Support	DFARTL353

Table C-1: (continued)

Product Directory	Description	Subset Name
DEC_Pascal_RTL	DEC Pascal for DEC OSF/1 AXP Run-Time Support	DPORTL513
GNU Source	GNU awk Source GNU Emacs Source GNU Revision Control System Source	FSFGAWKSRC300 FSFEMACSSRC300 FSFRCSSRC300
SORT	Sort Run Time Library	SORLIB201

International subsets are located in /mnt/ALPHA/WORLDWIDE/BASE on the DEC OSF/1 Version 3.0 CD-ROM. Section C.13 lists the international subsets that are available.

C.1 Atom Performance Analysis Tool (ATMBASE)

Atom is a performance analysis and debugging tool kit. This kit is being provided as an ADK (Advanced Developer's Kit). As such, the tools may be used to help diagnose application problems, but it is not a fully supported product at this time. It will be provided as a fully supported product in a future release.

Atom is an object modificaton tool. It allows customized debugging and performance analysis tools to be developed by the user. The Atom kit supplies a set of tools which can be used to analyze programs and as references for developing new tools. The tools consist of two components: the instrumentation code and the analysis code. The instrumentation code controls the points at which the application is to be monitored. The analysis code controls what is monitored at those points. The reference pages, stored under /usr/lib/atom/man, describe the supplied tools and how to use Atom.

The software and documentation are installed in the directory /usr/lib/atom. The Atom utility is stored under /usr/lib/cmplrs/cc/atom. The file /usr/lib/atom/README contains information about the contents of /usr/lib/atom. There are two manpages included: atom(1) and atomtools(5). The kit also includes postscript versions of Atom manuals.

The OSFCMPLRS300 subset should be installed before installing Atom. Follow these steps to install Atom:

1. Deinstall any previous version of the kit that may have been installed:

   setld -d ATMBASE300

2. Install Atom:

   setld -l *location* **ATMBASE300**

3. Enter `1` or `2` at the prompt which asks which subset you want to install. Atom consists of only one subset, so the answers (`1 or 2`) are equivalent.

When the installation completes, the verification script may optionally be run:

setld -v ATMBASE300

The verification process runs a set of confidence tests and stores the results under `/usr/lib/atom/confidence`.

C.2 Development Enhancements (Compiler) for DEC OSF/1 AXP Systems (CMPDEVENH)

The following is a brief guide to the most important items in this subset. See the product documentation for a full description.

There are static and shared libraries which contain the `malloc()` system call as it was implemented in DEC OSF/1 V1.2 and V1.3. The libraries are shipped to ensure backwards compatability with previous versions of DEC OSF/1.

The file `mmap_32.c` is a C source file that provides a jacket for the `mmap()` system call. This is provided to support the Truncated Address Support Option (TASO) in DEC OSF/1 Version 1.3. refer to the TASO documentation for more information if your TASO code contains `mmap()`calls.

To install the Compiler Development Enhancements subset from CD–ROM, become superuser or root and follow the steps described in Chapter 8 for installing software subsets. Enter the command:

```
# setld -l /mnt/ALPHA/COMPILERS
```

Choose the Compiler Development Enhancements subset from the menu.

If you are doing a Remote Installation Services (RIS) installation of your software, choose the Compiler Development Enhancements subset from the

RIS menu. Use the following command to install the subset:

```
# setld -l hostname:
```

Replace *hostname* with the name of your RIS server.

C.3 DEC Ada Run-Time Library Support for DEC OSF/1 AXP Systems (ADALIB)

The Ada Run-Time Library subset is included on the DEC OSF/1 CD–ROM to facilitate deployment of applications built using DEC Ada.

The following table describes the contents of the DEC Ada Run-Time Library kit:

File Name	Description
`libada.so`	DEC Ada Run-Time Library, shared object
`libada.a`	DEC Ada Run-Time Library, archive library

Inclusion of the DEC Ada Run-Time Library in the base system allows end users to run applications that were linked with the DEC Ada (run-time) libraries without requiring the end user to purchase DEC Ada.

To install the DEC Ada Run-Time Library subset from the distribution CD–ROM, log in as root (or become superuser) and follow the steps described in Chapter 8 for installing software subsets or enter the following command:

```
# setld -l /mnt/ALPHA/DEC_Ada_RTL
```

Choose the DEC Ada Run-Time Library subset from the menu.

If you are performing a Remote Installation Services (RIS) installation of your software, choose the DEC Ada Run-Time Library subset from the RIS menu. Use the following command to install the subset:

```
# setld -l hostname:
```

Replace *hostname* with the name of your RIS server.

C.4 DECLadebug for DEC OSF/1 AXP Systems (LDBBASE and LDBSRV)

The DECLadebug Debugger is a symbolic source-level debugger that currently supports debugging of C++ and C applications. It has a command line interface similar to `dbx`.

To install the DECLadebug Debugger subset from CD–ROM, become superuser or root and follow the steps described in Chapter 8 for installing

software subsets. Enter the command:

```
# setld -l /mnt/ALPHA/DECLADEBUG
```

Choose the DECLadebug Debugger subset from the menu.

The `setld` utility presents you with a menu from which you can install either the debugger or the Bookreader subset, or you can install both subsets.

After you install the Bookreader subset, you can invoke the online version of the *Guide to the DECLadebug Debugger* by entering the following command. (If you have not set up your workstation or server to access the Bookreader documentation, follow the instructions in Chapter 6.)

```
# dxbook decladebug.book &
```

If you are doing a RIS installation of your software, choose the DECLadebug subset from the RIS menu. Use the following command to install the subset:

```
# setld -l hostname:
```

Replace *hostname* with the name of your RIS server.

C.5 DEC C++ RTL for DEC OSF/1 AXP Systems (CXXSHRDA)

The C++ Run-Time Libraries subset is included on the DEC OSF/1 CD–ROM to facilitate deployment of applications built using DEC C++.

The following table describes the contents of the DEC C++ Run-Time Libraries kit:

File Name	Description
`libcxx.so`	DEC C++ language support, iostream and miscellaneous class libraries
`libcomplex.so`	DEC C++ complex class
`libtask.so`	DEC C++ task classes
`cxxl.cat`	DEC C++ RTL message catalog

Inclusion of the DEC C++ Run-Time Libraries in the base system allows end users to run applications that were linked with the DEC C++ shared object (run-time) libraries, without requiring the end user to purchase DEC C++.

To install the DEC C++ Run-Time Libraries subset from CD–ROM, become superuser or root and follow the steps described in Chapter 8 for installing

software subsets. Enter the command:

```
# setld -l /mnt/ALPHA/DEC_C++_RTL
```

Choose the DEC C++ Run-Time Libraries subset from the menu.

If you are doing a RIS installation of your software, choose the DEC C++ Run-Time Libraries subset from the RIS menu. Use the following command to install the subset:

```
# setld -l hostname:
```

Replace *hostname* with the name of your RIS server.

C.6 DEC Cobol Run-Time Support Library for DEC OSF/1 AXP Systems (DCARTL)

DEC Cobol Run-Time Support Library for DEC OSF/1 AXP Systems is a software library that provides compiled code support for file processing, format processing, I/O processing and other capabilities to the DEC Cobol programming language implementation. The DEC Fortran for DEC OSF/1 AXP Run-Time Support subsets must be installed at the same time as the DEC Cobol Run-Time Support subsets.

This subset contains:

- DCARTL110 - DEC Cobol Run-Time Support Library
- 02ABASE110 - DEC Decimal Run-Time Support Library

Both subsets must be installed together. The following table lists the contents of the DCARTL110 subset:

File Name	Description
`libcob.a`	DEC Cobol Run Time (archive) library
`libcob.so`	DEC Cobol Run Time (sharable) library
`libisam_stub.a`	DEC Cobol ISAM stub (archive) library
`cob_msg.cat`	DEC Cobol Run Time library message catalog

The following table lists the contents of the O2ABASE110 subset:

File Name	Description
`libots2.a`	DEC Decimal Support Run Time (archive) Library
`libots2.so`	DEC Decimal Support Run Time (shareable) Library

To install the Cobol Run-Time Support Library subset from CD–ROM, become superuser or root and follow the steps described in Chapter 8 for installing software subsets. Enter the command:

```
# setld -l /mnt/ALPHA/DEC_Cobol_RTL
```

Choose both subsets from the menu.

If you are doing a RIS installation of your software, choose the DCARTL110 subset from the RIS menu. Use the following command to install the subset:

```
# setld –l hostname:
```

Replace *hostname* with the name of your RIS server.

C.7 DEC Fortran for DEC OSF/1 AXP Run-Time Support (DFARTL)

This section discusses the DEC Fortran for DEC OSF/1 AXP Run-Time Support subset.

The DEC Fortran for DEC OSF/1 AXP Run-Time Support is a software library that provides compiled code support for file processing, format processing, I/O processing and other capabilities to the DEC Fortran programming language implementation.

The following table lists the contents of the DEC Fortran for DEC OSF/1 AXP Run-Time Support kit:

File Name	Description
`libFutil.a`	DEC Convert RTL
`libUfor.a`	DEC Fortran Unsupported RTL
`libfor.a`	DEC Fortran RTL
`libFutil.so`	DEC Convert RTL
`libUfor.so`	DEC Fortran Unsupported RTL
`libfor.so`	DEC Fortran RTL
`for_msg.cat`	DEC Fortran RTL Message Catalog

To install the DEC Fortran for DEC OSF/1 AXP Run-Time Support subset from CD–ROM become superuser or root and follow the steps described in Chapter 8 for installing software subsets. Enter the command:

```
# setld -l /mnt/ALPHA/DEC_Fortran_RTL
```

Choose the DEC Fortran for DEC OSF/1 AXP Run-Time Support subset from the menu.

If you are doing a RIS installation of your software, choose the DEC Fortran Run-Time Support subset from the RIS menu. Use the following command to install the subset:

```
# setld –l hostname:
```

Replace *hostname* with the name of your RIS server.

C.8 DEC Pascal for DEC OSF/1 AXP Run-Time Support (DPORTL)

The DEC Pascal for DEC OSF/1 AXP Run-Time Support is a software library that provides compiled code support for file processing, format processing, I/O processing and other capabilities to the DEC Pascal programming language implementation. The DEC Fortran for DEC OSF/1 AXP Run-Time Support subsets must be installed at the same time as the DEC Pascal for DEC OSF/1 AXP Run-Time Support Library subset.

File Name	Description
libpas.a libpas.so	DEC Pascal RTL
libpas_msg.cat	DEC Pascal RTL message catalog

To install the DEC Pascal for DEC OSF/1 AXP Run-Time Support subset from CD–ROM, become superuser or root and follow the steps described in Chapter 8 for installing software subsets. Enter the command:

```
# setld -l /mnt/ALPHA/DEC_Pascal_RTL
```

Choose the DEC Pascal for DEC OSF/1 AXP Run-Time Support subset from the menu.

If you are doing a RIS installation of your software, choose the DEC Pascal for DEC OSF/1 AXP Run-Time Support subset from the RIS menu. Use the following command to install the subset:

```
# setld –l hostname:
```

Replace *hostname* with the name of your RIS server.

C.9 GNU awk Source (FSFGAWKSRC)

The GNU awk Source subset contains source files for the GNU awk programming language.

To install the GNU awk Source subset from CD–ROM, become superuser or root and follow the steps described in Chapter 8 for installing software subsets. Enter the command:

```
# setld -l /mnt/ALPHA/GNUSRC
```

Choose the GNU awk Source subset from the menu.

If you are doing a RIS installation of your software, choose the GNU awk Source subset from the RIS menu. Use the following command to install the subset:

```
# setld –l hostname:
```

Replace *hostname* with the name of your RIS server.

C.10 GNU Emacs Source (FSFEMACSSRC)

The GNU Emacs Source subset contains the source files for the GNU Emacs editor. The subset OSFBASE300 must be installed.

To install the GNU Emacs Source subset from CD–ROM become superuser or root and follow the steps described in Chapter 8 for installing software

subsets. Enter the command:

```
# setld -l /mnt/ALPHA/GNUSRC
```

Choose the GNU Emacs Source subset from the menu.

If you are doing a RIS (Remote Installation Services) installation of your software, choose the GNU Emacs Source subset from the RIS menu. Use the following command to install the subset:

```
# setld –l hostname:
```

Replace *hostname* with the name of your RIS server.

C.11 GNU Revision Control System Source (FSFRCSSRC)

GNU Revision Control System Source subset contains source files for the GNU Revision Control System (RCS).

To install the GNU Revision Control System Source subset from CD–ROM, become superuser or root and follow the steps described in Chapter 8 for installing software subsets. Enter the command:

```
# setld -l /mnt/ALPHA/GNUSRC
```

Choose the GNU Revision Control System Source subset from the menu.

If you are doing a RIS installation of your software, choose the GNU Revision Control System Source subset from the RIS menu. Use the following command to install the subset:

```
# setld –l hostname:
```

Replace *hostname* with the name of your RIS server.

C.12 Sort Library (SORLIB)

The Sort subset provides a run-time library of sort routines that provide applications programming interface compatibility with a subset of the VMS sort utility. This functionality is provided to assist in the migration to DEC DEC OSF/1 of several VMS products that depend on VMS SORT. It also provides a high performance sort package that takes advantage of the AXP architecture for better performance.

The following table lists the contents of the SORLIB201 subset.

File Name	Description
`libsort.so`	Shareable object of Sort RTL routines

File Name	Description
`libsort.a`	Library of Sort RTL routines
`libsort.cat`	Sort message catalog

To install the Sort subset from CD–ROM, become superuser or root and follow the steps described in Chapter 8 for installing software subsets. Enter the command:

```
# setld -l /mnt/ALPHA/SORT
```

Choose the SORLIB201 subset from the menu.

If you are doing a RIS installation of your software, choose the Sort subset from the RIS menu. Use the following command to install the subset:

```
# setld –l hostname:
```

Replace *hostname* with the name of your RIS server.

C.13 Worldwide Support

DEC OSF/1 Alpha AXP International Support provides the following subsets to support international implementations. These subsets are located on the DEC OSF/1 Version 3.0 CD–ROM in `/mnt/ALPHA/WORLDWIDE/BASE:`

- DEC OSF/1 Worldwide Support Version 3.0
- DEC OSF/1 Czech Support Version 3.0
- DEC OSF/1 German Support Version 3.0
- DEC OSF/1 Greek Support Version 3.0
- DEC OSF/1 Spanish Support Version 3.0
- DEC OSF/1 French Support Version 3.0
- DEC OSF/1 Hungarian Support Version 3.0
- DEC OSF/1 Italian Support Version 3.0
- DEC OSF/1 Hebrew Support Version 3.0
- DEC OSF/1 Japanese Support Version 3.0
- DEC OSF/1 Korean Support Version 3.0
- DEC OSF/1 Polish Support Version 3.0
- DEC OSF/1 Russian Support Version 3.0
- DEC OSF/1 Slovak Support Version 3.0

- DEC OSF/1 Swedish Support Version 3.0
- DEC OSF/1 Thai Support Version 3.0
- DEC OSF/1 Turkish Support Version 3.0
- DEC OSF/1 Chinese Support Version 3.0

An installation script is provided in `/ALPHA/WORLDWIDE/wwinstall` and documentation is located in `/DOCUMENTATION/WORLDWIDE`. The documentation covers installation and use of the utilities in each subset. Both Bookreader and PostScript(R) versions of the books are available.

There is no license registration required for the international subsets.

C.13.1 DEC OSF/1 Worldwide Support Version 3.0

DEC OSF/1 Worldwide Support Version 3.0 provides the following subsets:

- IOSWWBASE300 Worldwide Base System (Operating System)
- IOSWWBIN300 Worldwide Standard Kernel Objects (Operating System)
- IOSWWBINCOM300 Worldwide Kernel Headers and Common Files (Operating System)
- IOSWWDECW300 Worldwide Additional DECwindows Applications (Operating System)
- IOSWWFONT300 Worldwide DECwindows Fonts (Windowing Environment)
- IOSWWLAT2FONT15300 Worldwide ISO-LATIN2 DECwindows 100dpi Fonts (Windowing Environment)
- IOSWWLAT2FONT300 Worldwide ISO-LATIN2 DECwindows 75dpi Fonts (Windowing Environment)
- IOSWWLATCFONT15300 Worldwide ISO-LATIN Cyrillic DECwindows 100dpi Fonts (Windowing Environment)
- IOSWWLATCFONT300 Worldwide ISO-LATIN Cyrillic DECwindows 75dpi Fonts (Windowing Environment)
- IOSWWMANOS300 Worldwide Support English Reference Pages (Operating System)
- IOSWWMH300 Worldwide Mail Handler (Operating System)
- IOSWWPHRASE300 Worldwide Phrase Input Support (Operating System)
- IOSWWPRINT300 Worldwide Printer Support (Operating System)
- IOSWWUDCOS300 Worldwide User Defined Character Support (Operating System)

- IOSWWUDCWOS300 Worldwide User Defined Character Workstation Service (Windowing Environment)
- IOSWWX11300 Worldwide Basic X Environment (Windowing Environment)
- IOSWWXDEV300 Worldwide X Window Software Development (Windowing Environment)
- IOSWWXMAIL300 Worldwide DECwindows Mail Interface (Windowing Environment)

C.13.2 DEC OSF/1 Czech Support Version 3.0

DEC OSF/1 Czech Support Version 3.0 contains the following subsets:

- IOSCSDECW300 Czech Additional DECwindows Applications (Windowing Environment)
- IOSCSX11300 Czech Basic X Environment (Windowing Environment)
- IOSCSXCDA300 Czech CDA Workstation Base Services (Windowing Environment)
- IOSCSXDEV300 Czech X Window Software Development (Windowing Environment)
- IOSCSXMAIL300 Czech DECwindows Mail Interface (Windowing Environment)

C.13.3 DEC OSF/1 German Support Version 3.0

DEC OSF/1 German Support Version 3.0 contains the following subsets:

- IOSDEDECW300 German Additional DECwindows Applications (Windowing Environment)
- IOSDEX11300 German Basic X Environment (Windowing Environment)
- IOSDEXCDA300 German CDA Workstation Base Services (Windowing Environment)
- IOSDEXDEV300 German X Window Software Development (Windowing Environment)
- IOSDEXMAIL300 German DECwindows Mail Interface (Windowing Environment)

C.13.4 DEC OSF/1 Greek Support Version 3.0

DEC OSF/1 Greek Support Version 3.0 provides the following subsets:

- IOSELDECW300 Greek Additional DECwindows Applications (Windowing Environment)
- IOSELFONT15300 Greek DECwindows 100dpi Fonts (Windowing Environment)
- IOSELFONT300 Greek DECwindows 75dpi Fonts (Windowing Environment)
- IOSELX11300 Greek Basic X Environment (Windowing Environment)
- IOSELXMAIL300 Greek DECwindows Mail Interface (Windowing Environment)

C.13.5 DEC OSF/1 Spanish Support Version 3.0

DEC OSF/1 Spanish Support Version 3.0 contains the following subsets:

- IOSESDECW300 Spanish Additional DECwindows Applications (Windowing Environment)
- IOSESX11300 Spanish Basic X Environment (Windowing Environment)
- IOSESXCDA300 Spanish CDA Workstation Base Services (Windowing Environment)
- IOSESXDEV300 Spanish X Window Software Development (Windowing Environment)
- IOSESXMAIL300 Spanish DECwindows Mail Interface (Windowing Environment)

C.13.6 DEC OSF/1 French Support Version 3.0

DEC OSF/1 French Support Version 3.0 contains the following subsets:

- IOSFRDECW300 French Additional DECwindows Applications (Windowing Environment)
- IOSFRX11300 French Basic X Environment (Windowing Environment)
- IOSFRXCDA300 French CDA Workstation Base Services (Windowing Environment)
- IOSFRXDEV300 French X Window Software Development (Windowing Environment)
- IOSFRXMAIL300 French DECwindows Mail Interface (Windowing Environment)

C.13.7 DEC OSF/1 Hungarian Support Version 3.0

DEC OSF/1 Hungarian Support Version 3.0 contains the following subsets:

- IOSHUDECW300 Hungarian Additional DECwindows Applications (Windowing Environment)
- IOSHUX11300 Hungarian Basic X Environment (Windowing Environment)
- IOSHUXCDA300 Hungarian CDA Workstation Base Services (Windowing Environment)
- IOSHUXDEV300 Hungarian X Window Software Development (Windowing Environment)
- IOSHUXMAIL300 Hungarian DECwindows Mail Interface (Windowing Environment)

C.13.8 DEC OSF/1 Italian Support Version 3.0

DEC OSF/1 Italian Support Version 3.0 contains the following subsets:

- IOSITDECW300 Italian Additional DECwindows Applications (Windowing Environment)
- IOSITX11300 Italian Basic X Environment (Windowing Environment)
- IOSITXCDA300 Italian CDA Workstation Base Services (Windowing Environment)
- IOSITXDEV300 Italian X Window Software Development (Windowing Environment)
- IOSITXMAIL300 Italian DECwindows Mail Interface (Windowing Environment)

C.13.9 DEC OSF/1 Hebrew Support Version 3.0

DEC OSF/1 Hebrew Support Version 3.0 contains the following subsets:

- IOSIWBASE300 Hebrew Base System (Required)
- IOSIWFONT15300 Hebrew DECwindows 100dpi Fonts (Windowing Environment)
- IOSIWFONT300 Hebrew DECwindows 75dpi Fonts (Windowing Environment)
- IOSIWX11300 Hebrew Basic X Environment (Windowing Environment)
- IOSIWXDEV300 Hebrew X Window Software Development (Windowing Environment)

C.13.10 DEC OSF/1 Japanese Support Version 3.0

DEC OSF/1 Japanese Support Version 3.0 provides the following subsets:

- IOSJPABASE300 Additional Japanese Software (Operating System)
- IOSJPAMANOS300 Japanese Ref. Pages for Additional Software (Operating System)
- IOSJPAMANOSSJIS300 SJIS Japanese Ref. Pages for Additional Software (Operating System)
- IOSJPBASE300 Japanese Base System (Required)
- IOSJPDECW300 Japanese Additional DECwindows Applications (Windowing Environment)
- IOSJPFONT15300 Japanese DECwindows 100dpi Fonts (Windowing Environment)
- IOSJPFONT300 Japanese DECwindows 75dpi Fonts (Windowing Environment)
- IOSJPMANOS300 Japanese Reference Pages (Operating System)
- IOSJPMANOSSJIS300 Japanese (SJIS) Reference Pages (Operating System)
- IOSJPMANWOS300 Japanese Windows Reference Pages (Windowing Environment)
- IOSJPMSG300 Japanese Message Catalogs (Operating System)
- IOSJPMSGSJIS300 SJIS Formatted Japanese Message Catalogs (Operating System)
- IOSJPNEMACS300 Japanese Nemacs (Operating System)
- IOSJPPGMR300 Japanese Software Development (Operating System)
- IOSJPSJISMANOS300 SJIS Formatted Japanese Reference Pages (Operating System)
- IOSJPWNN300 Wnn Input Method (Operating System)
- IOSJPWNNPGMR300 Wnn Software Development (Operating System)
- IOSJPX11300 Japanese Basic X Environment (Windowing Environment)
- IOSJPXCDA300 Japanese CDA Workstation Base Services (Windowing Environment)
- IOSJPXDEV300 Japanese X Window Software Development (Windowing Environment)
- IOSJPXMAIL300 Japanese DECwindows Mail Interface (Windowing Environment)

C.13.11 DEC OSF/1 Korean Support Version 3.0

DEC OSF/1 Korean Support Version 3.0 provides the following subsets:

- IOSKOBASE300 Korean Base System (Required)
- IOSKODECW300 Korean Additional DECwindows Applications (Windowing Environment)
- IOSKOFONT300 Korean DECwindows Fonts (Windowing Environment)
- IOSKOFONT2300 Korean DECwindows Optional Fonts (Windowing Environment)
- IOSKOX11300 Korean Basic X Environment (Windowing Environment)
- IOSKOXCDA300 Korean CDA Workstation Base Services (Windowing Environment)
- IOSKOXDEV300 Korean X Window Software Development (Windowing Environment)
- IOSKOXMAIL300 Korean DECwindows Mail Interface (Windowing Environment)

C.13.12 DEC OSF/1 Polish Support Version 3.0

DEC OSF/1 Polish Support Version 3.0 provides the following subsets:

- IOSPLDECW300 Polish Additional DECwindows Applications (Windowing Environment)
- IOSPLX11300 Polish Basic X Environment (Windowing Environment)
- IOSPLXCDA300 Polish CDA Workstation Base Services (Windowing Environment)
- IOSPLXDEV300 Polish X Window Software Development (Windowing Environment)
- IOSPLXMAIL300 Polish DECwindows Mail Interface (Windowing Environment)

C.13.13 DEC OSF/1 Russian Support Version 3.0

DEC OSF/1 Russian Support Version 3.0 provides the following subsets:

- IOSRUDECW300 Russian Additional DECwindows Applications (Windowing Environment)
- IOSRUX11300 Russian Basic X Environment (Windowing Environment)
- IOSRUXCDA300 Russian CDA Workstation Base Services (Windowing Environment)

- IOSRUXDEV300 Russian X Window Software Development (Windowing Environment)
- IOSRUXMAIL300 Russian DECwindows Mail Interface (Windowing Environment)

C.13.14 DEC OSF/1 Slovak Support Version 3.0

DEC OSF/1 Slovak Support Version 3.0 provides the following subsets:

- IOSSKDECW300 Slovak Additional DECwindows Applications (Windowing Environment)
- IOSSKX11300 Slovak Basic X Environment (Windowing Environment)
- IOSSKXCDA300 Slovak CDA Workstation Base Services (Windowing Environment)
- IOSSKXDEV300 Slovak X Window Software Development (Windowing Environment)
- IOSSKXMAIL300 Slovak DECwindows Mail Interface (Windowing Environment)

C.13.15 DEC OSF/1 Swedish Support Version 3.0

DEC OSF/1 Swedish Support Version 3.0 provides the following subsets:

- IOSSVDECW300 Swedish Additional DECwindows Applications (Windowing Environment)
- IOSSVX11300 Swedish Basic X Environment (Windowing Environment)
- IOSSVXCDA300 Swedish CDA Workstation Base Services (Windowing Environment)
- IOSSVXDEV300 Swedish X Window Software Development (Windowing Environment)
- IOSSVXMAIL300 Swedish DECwindows Mail Interface (Windowing Environment)

C.13.16 DEC OSF/1 Thai Support Version 3.0

DEC OSF/1 Thai Support Version 3.0 provides the following subsets:

- IOSTHBASE300 Thai Base System (Required)

  IOSIBASE300 Internationalized Base System is required for this subset
- IOSIBIN300 Standard Kernel Objects (Operating System)

- IOSTHDECW300 Thai Additional DECwindows Applications (Windowing Environment)
- IOSTHFONT300 Thai DECwindows Fonts (Windowing Environment)
- IOSTHPRINT300 Thai Printer Support Environment (Operating System)
- IOSTHX11300 Thai Basic X Environment (Windowing Environment)
- IOSTHXDEV300 Thai X Window Software Development (Windowing Environment)
- IOSTHXCDA300 Thai CDA Workstation Base Services (Windowing Environment)
- IOSTHXMAIL300 Thai DECwindows Mail Interface (Windowing Environment)

C.13.17 DEC OSF/1 Turkish Support Version 3.0

DEC OSF/1 Turkish Support Version 3.0 provides the following subsets:

- IOSTRDECW300 Turkish Additional DECwindows Applications (Windowing Environment)
- IOSTRFONT15300 Turkish DECwindows 100dpi Fonts (Windowing Environment)
- IOSTRFONT300 Turkish DECwindows 75dpi Fonts (Windowing Environment)
- IOSTRX11300 Turkish Basic X Environment (Windowing Environment)
- IOSTRXMAIL300 Turkish DECwindows Mail Interface (Windowing Environment).

C.13.18 DEC OSF/1 Chinese Support Version 3.0

DEC OSF/1 Chinese Support Version 3.0 provides the following subsets:

- IOSZHBASE300 Chinese Base System (Required)
- IOSZHBIG5300 Big-5 Character Set Support (Operating System)
- IOSZHCNBASE300 Chinese Base System for China (Operating System)
- IOSZHCNLOC300 Additional Chinese Locales for China (Operating System)
- IOSZHCONV300 Traditional and Simplified Chinese Conversion (Operating System.
- IOSZHEUCTW300 Taiwanese EUC Character Set Support (Operating System)

- IOSZHHANYU300 DEC Hanyu Character Set Support (Operating System)
- IOSZHHANZI300 DEC Hanzi Character Set Support (Operating System)
- IOSZHHKBASE300 Chinese Base System for Hong Kong (Operating System)
- IOSZHMTELEX300 Mitac Telex Character Set Support (Operating System)
- IOSZHSDECW300 Simplified Chinese Additional DECwindows Applications (Windowing Environment)
- IOSZHSFONT2300 Simplified Chinese DECwindows Optional Fonts (Windowing Environment)
- IOSZHSFONT300 Simplified Chinese DECwindows Fonts (Windowing Environment)
- IOSZHSX11300 Simplified Chinese Basic X Environment (Windowing Environment)
- IOSZHSXCDA300 Simplified Chinese CDA Workstation Base Services (Windowing Environment)
- IOSZHSXDEV300 Simplified Chinese X Window Software Development (Windowing Environment)
- IOSZHSXMAIL300 Simplified Chinese DECwindows Mail Interface (Windowing Environment)
- IOSZHTDECW300 Traditional Chinese Additional DECwindows Applications (Windowing Environment)
- IOSZHTFONT2300 Traditional Chinese DECwindows Optional Fonts (Windowing Environment)
- IOSZHTFONT300 Traditional Chinese DECwindows Fonts (Windowing Environment)
- IOSZHTWBASE300 Chinese Base System for Taiwan (Operating System)
- IOSZHTWLOC300 Additional Chinese Locales for Taiwan (Operating System)
- IOSZHTX11300 Traditional Chinese Basic X Environment (Windowing Environment)
- IOSZHTXCDA300 Traditional Chinese CDA Workstation Base Services (Windowing Environment)
- IOSZHTXDEV300 Traditional Chinese X Window Software Development (Windowing Environment)

- IOSZHTXMAIL300 Traditional Chinese DECwindows Mail Interface (Windowing Environment)
- IOSZHX11300 Base Chinese X Environment (Windowing Environment)

C.14 Additional International Support

The following international subsets are located in `/mnt/ALPHA/WORLDWIDE/SRCS` on the DEC OSF/1 Version 3.0 CD–ROM:

- IOSJPNEMACSSRC300 Japanese Nemacs Source Files (Operating System)
- IOSJPWNNSRC300 Japanese Wnn Source Files (Operating System)

The following international subsets are located in `/mnt/ALPHA/WORLDWIDE/FONT` on the DEC OSF/1 Version 3.0 CD–ROM:

- IOSELOLFONT300 Greek Outline Fonts
- IOSIWOLFONT300 Hebrew Outline Fonts
- IOSKOOLFONT300 Korean Outline Fonts
- IOSTHOLFONT300 Thai Outline Fonts
- IOSTROLFONT300 Turkish Outline Fonts
- IOSWWLAT2OLFONT300 Latin 2 Outline Fonts
- IOSWWLATCOLFONT300 Latin Cyrillic Outline Fonts
- IOSZHSOLFONT300 Simplified Chinese Outline Fonts
- IOSZHTOLFONT300 Traditional Chinese Outline Fonts

Disk Partition Information D

This appendix provides disk partition information for the supported Digital Storage Architecture (DSA) and Small Computer System Interface (SCSI) disk drives. This information will help you complete the tables in Chapter 3.

See Section D.1 for a list of the supported DSA disk drives. See Section D.2 for a list of the supported SCSI disk drives.

D.1 DSA Disk Drives

The following `ra` disks are supported:

- RA60
- RA71, RA72, RA73
- RA81, RA82
- RA90, RA92

This section includes partition information for each of these disks.

RA60 Partitions

Partition	Start	End	Size	MB	Overlap
a	0	40959	40960	20	c
b	40960	82927	41968	20	c
c	0	400175	400176	195	a, b, d, e, f, g, h
d	242928	295343	52416	26	c, h
e	295344	347759	52416	26	c, h
f	347760	400175	52416	26	c, h
g	82928	242927	160000	78	c
h	242928	400175	157248	77	c, d, e, f

RA71 Partitions

Partition	Start	End	Size	MB	Overlap
a	0	131071	131072	64	c
b	131072	393215	262144	128	c
c	0	1367309	1367310	668	a, b, d, e, f, g, h
d	393216	717913	324698	159	c, g
e	717914	1042611	324698	159	c, g
f	1042612	1367309	324698	159	c, g, h
g	393216	1212415	819200	400	c, d, e, f
h	1212416	1367309	154894	76	c, f

RA72 Partitions

Partition	Start	End	Size	MB	Overlap
a	0	131071	131072	64	c
b	131072	393215	262144	128	c
c	0	1953299	1953300	954	a, b, d, e, f, g, h
d	393216	913243	520028	254	c, g
e	913244	1433271	520028	254	c, g, h
f	1433272	1953299	520028	254	c, h
g	393216	1212415	819200	400	c, d, e
h	1212416	1953299	740884	362	c, e, f

RA73 Partitions

Partition	Start	End	Size	MB	Overlap
a	0	131071	131072	64	c
b	131072	393215	262144	128	c
c	0	3920489	3920490	1914	a, b, d, e, f, g, h
d	393216	1568767	1175552	574	c, g, h
e	1568768	2744319	1175552	574	c, h
f	2744320	3920489	1176170	574	c, h
g	393216	1212415	819200	400	c, d
h	1212416	3920489	2708074	1322	c, d, e, f

RA81 Partitions

Partition	Start	End	Size	MB	Overlap
a	0	81919	81920	40	c
b	81920	344063	262144	128	c
c	0	891071	891072	435	a, b, d, e, f, g
d	344064	526399	182336	89	c, g
e	526400	708735	182336	89	c, g
f	708736	891071	182336	89	c, g
g	344064	891071	547008	267	c, d, e, f
h	0	0	0	0	

RA82 Partitions

Partition	Start	End	Size	MB	Overlap
a	0	131071	131072	64	c
b	131072	393215	262144	128	c
c	0	1216664	1216665	594	a, b, d, e, f, g
d	393216	667698	274483	134	c, g
e	667699	942181	274483	134	c, g
f	942182	1216664	274483	134	c, g
g	393216	1216664	823449	402	c, d, e, f
h	0	0	0	0	

RA90 Partitions

Partition	Start	End	Size	MB	Overlap
a	0	131071	131072	64	c
b	131072	393215	262144	128	c
c	0	2376152	2376153	1160	a, b, d, e, f, g, h
d	393216	1054194	660979	323	c, g
e	1054195	1715173	660979	323	c, g, h
f	1715174	2376152	660979	323	c, h
g	393216	1212415	819200	400	c, d, e
h	1212416	2376152	1163737	568	c, e, f

RA92 Partitions

Partition	Start	End	Size	MB	Overlap
a	0	131071	131072	64	c
b	131072	393215	262144	128	c
c	0	2940950	2940951	1436	a, b, d, e, f, g, h
d	393216	1054194	660979	323	c, g
e	1054195	1715173	660979	323	c, g, h
f	1715174	2376152	660979	323	c, h
g	393216	1212415	819200	400	c, d, e
h	1212416	2940950	1728535	844	c, e, f

D.2 SCSI Disk Drives

The following `rz` disks are supported:

- RZ24L
- RZ25, RZ25L, RZ26, RZ26L, RZ28, RZ28B
- RZ55, RZ56, RZ58
- RZ73, RZ74
- HSZ10, HSZ40

This section includes partition information for each of these disks.

RZ24L Partitions

Partition	Start	End	Size	MB	Overlap
a	0	40959	40960	20	c
b	40960	163839	122880	60	c
c	0	479349	479350	234	a, b, d, e, f, g
d	163840	269009	105170	51	c, g
e	269010	374179	105170	51	c, g
f	374180	479349	105170	51	c, g
g	163840	479349	315510	154	c, d, e, f
h	0	0	0	0	

RZ25 Partitions

Partition	Start	End	Size	MB	Overlap
a	0	131071	131072	64	c
b	131072	393215	262144	128	c
c	0	832526	832527	407	a, b, d, e, f, g
d	393216	539652	146437	72	c, g
e	539653	686089	146437	72	c, g
f	686090	832526	146437	72	c, g
g	393216	832526	439311	215	c, d, e, f
h	0	0	0	0	

RZ25L Partitions

Partition	Start	End	Size	MB	Overlap
a	0	131071	131072	64	c
b	131072	393215	262144	128	c
c	0	1046205	1046205	510	a, b, d, e, f, g
d	393216	610878	217663	106	c, g
e	610879	828541	217663	106	c, g
f	828542	1046205	146437	72	c, g
g	393216	1046205	439311	215	c, d, e, f
h	0	0	0	0	

RZ26 Partitions

Partition	Start	End	Size	MB	Overlap
a	0	131071	131072	64	c
b	131072	393215	262144	128	c
c	0	2050859	2050860	1001	a, b, d, e, f, g, h
d	393216	945763	552548	270	c, g
e	945764	1498311	552548	270	c, g, h
f	1498312	2050859	552548	270	c, h
g	393216	1212415	819200	400	c, d, e
h	1212416	2050859	838444	409	c, e, f

RZ26L Partitions

Partition	Start	End	Size	MB	Overlap
a	0	131071	131072	64	c
b	131072	393215	262144	128	c
c	0	2050859	2050860	1001	a, b, d, e, f, g, h
d	393216	945763	552548	270	c, g
e	945764	1498311	552548	270	c, g, h
f	1498312	2050859	552548	270	c, h
g	393216	1212415	819200	400	c, d, e
h	1212416	2050859	838444	409	c, e, f

RZ28 Partitions

Partition	Start	End	Size	MB	Overlap
a	0	131071	131072	64	c
b	131072	532479	401408	196	c
c	0	4110480	4110480	2007	a, b, d, e, f, g, h
d	532480	1724415	1191936	581	c, g
e	1724416	2916351	1191936	581	c, g, h
f	2916352	4110480	1194129	583	c, h
g	532480	2320383	1787904	873	c, d, e
h	2320384	4110480	1790097	874	c, ,e, f

RZ28B Partitions

Partition	Start	End	Size	MB	Overlap
a	0	131071	131072	64	c
b	131072	532479	401408	196	c
c	0	4110480	4110480	2007	a, b, d, e, f, g, h
d	532480	1724415	1191936	581	c, g
e	1724416	2916351	1191936	581	c, g, h
f	2916352	4110480	1194129	583	c, h
g	532480	2320383	1787904	873	c, d, e
h	2320384	4110480	1790097	874	c, ,e, f

RZ55 Partitions

Partition	Start	End	Size	MB	Overlap
a	0	131071	131072	64	c
b	131072	393215	262144	128	c
c	0	649039	649040	317	a, b, g
d	0	0	0	0	
e	0	0	0	0	
f	0	0	0	0	
g	393216	649039	255824	125	c
h	0	0	0	0	

RZ56 Partitions

Partition	Start	End	Size	MB	Overlap
a	0	131071	131072	64	c
b	131072	393215	262144	128	c
c	0	1299173	1299174	634	a, b, d, e, f, g, h
d	393216	695201	301986	147	c, g
e	695202	997187	301986	147	c, g
f	997188	1299173	301986	147	c, g, h
g	393216	1212415	819200	400	c, d, e, f
h	1212416	1299173	86758	42	c, f

RZ58 Partitions

Partition	Start	End	Size	MB	Overlap
a	0	131071	131072	64	c
b	131072	393215	262144	128	c
c	0	2698060	2698061	1317	a, b, d, e, f, g, h
d	393216	1161496	768281	375	c, g
e	1161497	1929778	768282	375	c, g, h
f	1929779	2698060	768282	375	c, h
g	393216	1212415	819200	400	c, d, e
h	1212416	2698060	1485645	725	c, e, f

RZ73 Partitions

Partition	Start	End	Size	MB	Overlap
a	0	131071	131072	64	c
b	131072	393215	262144	128	c
c	0	3907910	3907911	1908	a, b, d, e, f, g, h
d	393216	1564780	1171565	572	c, g, h
e	1564781	2736345	1171565	572	c, h
f	2736346	3907910	1171565	572	c, h
g	393216	1212415	819200	400	c, d
h	1212416	3907910	2695495	1316	c, d, e, f

RZ74 Partitions

Partition	Start	End	Size	MB	Overlap
a	0	131071	131072	64	c
b	131072	524287	393216	192	c
c	0	6976374	6976375	3406	a, b, d, e, f, g, h
d	524288	2674687	2150400	1050	c, g
e	2674688	4825087	2150400	1050	c, g, h
f	4285088	6976374	2691287	1414	c,h
g	524287	3749887	3225600	1575	c, d, e
h	3749888	6976374	3226486	1575	c, e, f

HSZ10 Partitions

Partition	Start	End	Size	MB	Overlap
a	0	131071	131072	64	n/a
b	131072	262144	131072	64	n/a
c	0	end of media	n/a	n/a	a, b, g
d	0	0	n/a	n/a	n/a
e	0	0	n/a	n/a	n/a
f	0	0	n/a	n/a	n/a
g	393216	end of media	n/a	n/a	n/a
h	0	0	n/a	n/a	n/a

HSZ40 Partitions

Partition	Start	End	Size	MB	Overlap
a	0	131071	131072	64	n/a
b	131072	262144	131072	64	n/a
c	0	end of media	n/a	n/a	a, b, g
d	0	0	n/a	n/a	n/a
e	0	0	n/a	n/a	n/a
f	0	0	n/a	n/a	n/a
g	393216	end of media	n/a	n/a	n/a
h	0	0	n/a	n/a	n/a

(HSZ10 and HSZ40 are SCSI disk arrays employing RAID technology. Disk partition sizes are dependent on the number of disk devices in the array, and how they have been configured.)

Installation Error Messages E

This appendix explains some of the error messages that you might encounter if there is a problem during an installation.

```
<string>: unknown machine type
```

The program used to determine the type of machine being installed has not found the expected AXP(TM) architecture. *string* is the value returned from the program.

The system installation cannot continue and you must contact your field service representative.

```
Do you want to quit the installation? (y/n) []:
```

For some special installation cases, there might be a release note that asks you to press Ctrl/c and enter commands. In these cases, there will also be instructions on how to restart or continue the installation procedure.

If you answer `y`, it means that you want to terminate the installation and restart at the beginning. If you answer `n`, the installation procedure will continue.

```
No valid device is found.  Contact a DIGITAL field service
representative.
```

A device that is supported by the operating system as a valid distribution device cannot be found on the system.

Contact your Digital field service representative.

```
The MAKEDEV command could not make the special files on device <device
name>This error causes the installation procedure to stop.  One possible
cause for the error is a corrupt system disk.  You may want to replace
or use another system disk, and begin the installation again.  If this
error message appears a second time, contact a DIGITAL representative.
```

The system is unable to create the device special file for the load device. The in-memory file system might not be mounted read-write. The `MAKEDEV` command might not understand how to create special files for the device.

Verify that the file system is read-write by using the `mount` command. Restart the installation by pressing Ctrl/d. If the problem persists,

contact your Digital field service representative.

```
No valid device is found.  Contact a DIGITAL field service
representative.
```

There are no disks on the system that are supported for the purpose of storing the root file system.

Consult the Software Product Description (SPD) and Appendix D for a list of supported disks.

If you have disks which are listed as supported for use as system disks connected to your system, use the following steps to check the cables:

1. Turn off the system and all connected expansion cabinets.
2. Check the cabling to all disks and expansion cabinets.
3. Turn on all expansion cabinets.
4. Turn on the system box.
5. Start the installation again by booting the standalone (SAS) environment.

```
You attempted to allocate the root file system on rz?a, which contains
your distribution medium.  Select another disk device from the table.
```

You tried to use the distribution device as the system disk. This situation will not occur if you are installing from a CD-ROM drive, but it might occur if you copied your CD-ROM onto a magnetic disk and attempted to use the magnetic disk as the distribution device.

The system disk selection menu will reappear. Select a different drive.

Basic Installation Log F

The following is an example of a basic installation performed on a DEC 3000 processor. The exact text displayed by the installation software depends on the type of system you have and the type of media you are using, but the installation procedure for all systems and media is similar.

```
*** STANDALONE SYSTEM ENVIRONMENT ***

  Select the BASIC option to install the mandatory
  software subsets for your system configuration.

  Select the ADVANCED option to display optional
  software subsets from a menu and/or customize
  system disks and partitions.

  Select the SYSTEM MANAGEMENT option to customize disk
  partitions on the system disk.


Select one of the following options:


        1) BASIC Installation
        2) ADVANCED Installation

        3) SYSTEM Management

Enter your choice: 1

*** SYSTEM DISK SELECTION ***

The Installation Guide explains the following table
of system disk drives.  Select one of the disks in the table
to contain the root file system:

SYSTEM DISK TABLE

Selection   Device    Software    Device       Controller
Controller
            Name       Name       Number       Name         Number
-------------------------------------------------------------------
    1       RZ26L       rz0          0         SCSI           0
    2       RZ26        rz3          3         SCSI           0
    3       RZ58        rz8          8         SCSI           1
-------------------------------------------------------------------

Enter your choice: 3

You selected RZ58, device number 8. Make sure this disk drive
is online and write-enabled (if applicable to your disk drive),
```

```
then confirm your choice.

Use RZ58, rz8, for your system disk? (y/n) []: y
Initializing the system disk RZ58, rz8...
        Working....Mon Jul 11 13:47:30 GMT 1994
        Working....Mon Jul 11 13:49:31 GMT 1994

*** BOOTSTRAP COMMAND SEQUENCE ***

Distribution source is remote server ds9
The system disk has been initialized.

Issue the following console commands to set your default bootpath
variable and to boot your system disk to multiuser:

        >>> set boot_osflags A
        >>> set bootdef_dev "DKB0"
        >>> boot

*****   Continuing DEC OSF/1 installation


*****   CREATING DEFAULT FILE SYSTEMS

        The default location for the /usr file system is rz8g
        The default location for the var area is rz8g (in /usr)
        The default location for the swap space is rz8b
        The default filesystem type for /usr is ufs (UNIX File
System)

Making the new file system for /usr on /dev/rrz8g RZ58
        Working....Mon Jul 11 13:51:21 GMT 1994

***             Loading the operating system software subsets

The installation procedure will now load the software on your
disk partitions. This process will take anywhere between
20 minutes to an hour, depending on your distribution media
and processor type.
        Working....Mon Jul 11 13:51:58 GMT 1994

The following subsets will be installed:
        Base System
        Base System - Hardware Support
        Compiler Back End
        Kernel Header and Common Files
        Standard Kernel Objects
        Hardware Kernel Objects
        Hardware Kernel Header and Common Files
        Basic Networking Services
        X Servers
        Basic X Environment
        X Fonts
        DECwindows 100dpi Fonts
        Adobe Fonts
        NFS(tm) Utilities

Base System
   Copying from ds9 (inet)
        Working....Mon Jul 11 13:54:22 GMT 1994
```

```
   Verifying
        Working....Mon Jul 11 13:56:33 GMT 1994

Base System - Hardware Support
   Copying from ds9 (inet)
        Working....Mon Jul 11 13:57:08 GMT 1994
   Verifying

Compiler Back End
   Copying from ds9 (inet)
        Working....Mon Jul 11 13:57:47 GMT 1994
   Verifying

Kernel Header and Common Files
   Copying from ds9 (inet)
        Working....Mon Jul 11 13:58:40 GMT 1994
   Verifying

Standard Kernel Objects
   Copying from ds9 (inet)
        Working....Mon Jul 11 13:59:51 GMT 1994
   Verifying

Hardware Kernel Objects
   Copying from ds9 (inet)
        Working....Mon Jul 11 14:00:54 GMT 1994
   Verifying

Hardware Kernel Header and Common Files
   Copying from ds9 (inet)
   Verifying

Basic Networking Services
   Copying from ds9 (inet)
   Verifying

X Servers
   Copying from ds9 (inet)
        Working....Mon Jul 11 14:02:44 GMT 1994
   Verifying

Basic X Environment
   Copying from ds9 (inet)
        Working....Mon Jul 11 14:03:36 GMT 1994
   Verifying

X Fonts
   Copying from ds9 (inet)
        Working....Mon Jul 11 14:04:58 GMT 1994
   Verifying

DECwindows 100dpi Fonts
   Copying from ds9 (inet)
   Verifying

Adobe Fonts
   Copying from ds9 (inet)
   Verifying

NFS(tm) Utilities
```

```
   Copying from ds9 (inet)
   Verifying

The installation procedure has successfully installed the software
subsets
```

Advanced Installation Log G

The following is an example of an advanced installation performed on a DEC 3000 processor. The exact text displayed by the installation software depends on the type of system you have and the type of media you are using, but the installation procedure for all systems and media is similar.

```
*** STANDALONE SYSTEM ENVIRONMENT ***

  Select the BASIC option to install the mandatory
  software subsets for your system configuration.

  Select the ADVANCED option to display optional
  software subsets from a menu and/or customize
  system disks and partitions.

  Select the SYSTEM MANAGEMENT option to customize disk
  partitions on the system disk.


Select one of the following options:


      1) BASIC Installation
      2) ADVANCED Installation

      3) SYSTEM Management

Enter your choice: 2

*** SYSTEM DISK SELECTION ***

The Installation Guide explains the following table
of system disk drives.  Select one of the disks in the table
to contain the root file system:

SYSTEM DISK TABLE

Selection   Device     Software    Device       Controller   Controller
            Name        Name       Number       Name         Number
-------------------------------------------------------------------------
    1       RZ26L       rz0          0          SCSI           0
    2       RZ26        rz3          3          SCSI           0
    3       RZ58        rz8          8          SCSI           1
-------------------------------------------------------------------------

Enter your choice: 3

You selected RZ58, device number 8. Make sure this disk drive
is online and write-enabled (if applicable to your disk drive), then
confirm your choice.
```

```
Use RZ58, rz8, for your system disk? (y/n) []: y

You can select to use the UNIX File System (ufs) or the Advanced File
System (advfs) for the root file system.  See the Installation Guide
for further information.

Select the file system type for the root file system
(advfs/ufs) [ufs]: advfs


Initializing the system disk RZ58, rz8...
     Working....Tue Jul 12 14:42:47 GMT 1994

*** BOOTSTRAP COMMAND SEQUENCE ***

Distribution source is remote server ds9

Issue the following console commands to set your default
bootpath variable and to boot your system disk to multiuser:

     >>> set boot_osflags A
     >>> set bootdef_dev "DKB0"
     >>> boot

***** Continuing DEC OSF/1 installation


***** SELECT FILE SYSTEMS

     The default location for the /usr file system is rz8g
     The default location for the var area is rz8g (in /usr)
     The default location for the swap space is rz8b
     The default filesystem type for /usr is ufs (UNIX File System)

     Would you like to use these defaults? (y/n): n

***         Allocate the /usr file system

You can allocate the /usr file system to one of the disks listed in the
table below.  See the Installation Guide for an explanation of
this table:


/usr file system ALLOCATION TABLE

Selection   Device     Software    Device       Controller   Controller
            Name        Name       Number       Name         Number
-------------------------------------------------------------------------
    1       RZ26L       rz0          0          SCSI           0
    2       RZ26        rz3          3          SCSI           0
    3       RZ58        rz8          8          SCSI           1
-------------------------------------------------------------------------

Enter your choice: 3

You selected RZ58, device number 8.  Make sure this disk is
online and write-enabled (if applicable), then confirm your choice.

Use RZ58, rz8 for /usr file system? (y/n) []: y
```

```
Select the rz8 partition on which the /usr file system
will be mounted:


partition       start     size      end  overlap
-----------------------------------------------------------------
    b   ----         131072    262144    393215
    d   ----         393216    768281   1161496        g
    e   ----        1161497    768282   1929778        g, h
    f   ----        1929779    768282   2698060        h
    g   ----         393216    819200   1212415        d, e
    h   ----        1212416   1485645   2698060        e, f
-----------------------------------------------------------------

Enter the letter specifying which partition to use: h


Use rz8 partition 'h' for the /usr file system (y/n) []? y

You can select to use the UNIX File System (ufs) or the Advanced File
System (advfs) for the /usr file system.  See Installation Guide for
further information.

Select the file system type for the /usr file system
(advfs/ufs) [ufs]: advfs

Making the new file system for /usr on /dev/rrz8h RZ58

***         Allocate the SWAP1 space

You can allocate the swap1 space to one of the disks listed in the
table below.  See the Installation Guide for an explanation of
this table:


swap1 space ALLOCATION TABLE

Selection   Device     Software     Device       Controller   Controller
            Name        Name        Number       Name         Number
-----------------------------------------------------------------------
    1       RZ26L        rz0          0          SCSI           0
    2       RZ26         rz3          3          SCSI           0
    3       RZ58         rz8          8          SCSI           1
-----------------------------------------------------------------------

Enter your choice: 2

You selected RZ26, device number 3.  Make sure this disk is
online and write-enabled (if applicable), then confirm your choice.

Use RZ26, rz3 for swap1 space? (y/n) []: y

Select the rz3 partition on which the swap1 space
will be mounted:


partition       start     size      end  overlap
-----------------------------------------------------------------
    a   ----             0    131072    131071       c
    b   ----         131072    262144    393215       c
```

```
    c   ----          0   2050860   2050859      a, b, d, e, f, g, h
    d   ----     393216    552548    945763      c, g
    e   ----     945764    552548   1498311      c, g, h
    f   ----    1498312    552548   2050859      c, h
    g   ----     393216    819200   1212415      c, d, e
    h   ----    1212416    838444   2050859      c, e, f
-------------------------------------------------------------------

Enter the letter specifying which partition to use: e


Use rz3 partition 'e' for the swap1 space (y/n) []? y

***         Allocate the SWAP2 space

Do you want to allocate a second swap space? (y/n) []: y

You can allocate the swap2 space to one of the disks listed in the
table below.  See the Installation Guide for an explanation of
this table:


swap2 space ALLOCATION TABLE

Selection   Device     Software     Device       Controller   Controller
            Name        Name        Number       Name         Number
-------------------------------------------------------------------------
    1       RZ26L       rz0           0          SCSI           0
    2       RZ26        rz3           3          SCSI           0
    3       RZ58        rz8           8          SCSI           1
-------------------------------------------------------------------------

Enter your choice: 1

You selected RZ26L, device number 0.  Make sure this disk is
online and write-enabled (if applicable), then confirm your choice.

Use RZ26L, rz0 for swap2 space? (y/n) []: y

Select the rz0 partition on which the swap2 space
will be mounted:


partition      start     size      end  overlap
-------------------------------------------------------------------
    a   ----          0    131072    131071      c
    b   ----     131072    262144    393215      c
    c   ----          0   2050860   2050859      a, b, d, e, f, g, h
    d   ----     393216    552548    945763      c, g
    e   ----     945764    552548   1498311      c, g, h
    f   ----    1498312    552548   2050859      c, h
    g   ----     393216    819200   1212415      c, d, e
    h   ----    1212416    838444   2050859      c, e, f
-------------------------------------------------------------------

Enter the letter specifying which partition to use: b


Use rz0 partition 'b' for the swap2 space (y/n) []? y
```

```
***         Allocate the /var file system

The /var area of your system can either be placed in the /usr
file system or on a separate file system.

Do you want to allocate a separate file system for /var? (y/n): y

You can allocate the /var file system to one of the disks listed in the
table below.  See the Installation Guide for an explanation of
this table:


/var file system ALLOCATION TABLE

Selection   Device     Software    Device       Controller   Controller
            Name        Name       Number       Name         Number
-------------------------------------------------------------------------
    1       RZ26L       rz0          0          SCSI           0
    2       RZ26        rz3          3          SCSI           0
    3       RZ58        rz8          8          SCSI           1
-------------------------------------------------------------------------

Enter your choice: 1

You selected RZ26L, device number 0.  Make sure this disk is
online and write-enabled (if applicable), then confirm your choice.

Use RZ26L, rz0 for /var file system? (y/n) []: y

Select the rz0 partition on which the /var file system
will be mounted:


partition      start     size      end  overlap
-------------------------------------------------------------------------
    a   ----             0    131072    131071
    d   ----        393216    552548    945763       g
    e   ----        945764    552548   1498311       g, h
    f   ----       1498312    552548   2050859       h
    g   ----        393216    819200   1212415       d, e
    h   ----       1212416    838444   2050859       e, f
-------------------------------------------------------------------------

Enter the letter specifying which partition to use: g


Use rz0 partition 'g' for the /var file system (y/n) []? y

You can select to use the UNIX File System (ufs) or the Advanced File
System (advfs) for the /var file system.  See Installation Guide for
further information.

Select the file system type for the /var file system
(advfs/ufs) [ufs]: advfs

Making the new file system for /var on /dev/rrz0g RZ26L

***         Loading the operating system software subsets

The installation procedure will now load the software on your
```

```
disk partitions. This process will take anywhere between
20 minutes to an hour, depending on your distribution media
and processor type.

You will be presented with a menu of software options in a
few moments.
      Working....Tue Jul 12 14:50:09 GMT 1994

*** Enter subset selections ***

The following subsets are mandatory and will be installed by default:

      * Base System
      * Base System - Hardware Support
      * Hardware Kernel Header and Common Files
      * Hardware Kernel Objects
      * Kernel Header and Common Files
      * POLYCTR advfs Kernel Objects
      * Standard Kernel Objects
      * Basic Networking Services
      * NFS(tm) Utilities
      * Compiler Back End
      * POLYCTR advfs
      * Adobe Fonts
      * Basic X Environment
      * DECwindows 100dpi Fonts
      * X Fonts
      * X Servers

The subsets listed below are optional:

There may be more optional subsets than can be presented on a single
screen. If this is the case, you can choose subsets screen by screen
or all at once on the last screen. All of the choices you make will
be collected for your confirmation before any subsets are installed.

 - General Applications:
     1) Common Agent
     2) Computer Aided System Tutor
     3) GNU Emacs
     4) Local Area Transport (LAT)
     5) Logical Storage Manager
     6) Logical Storage Manager GUI
     7) Logical Volume Manager
     8) UNIX(tm) SVID2 Compatibility
     9) UNIX(tm) to UNIX(tm) Copy Facility

 - Kernel Build Environment:
    10) Logical Storage Manager Kernel Header and Common Files
    11) Logical Storage Manager Kernel Objects

 - Mail Applications:
    12) DECwindows Mail Interface
    13) RAND Corp. Mail Handler (MH)

 - Network-Server/Communications:
    14) Additional Networking Services
    15) Dataless Management Services
    16) Remote Installation Service
```

```
 - Printing Environment:
    17) Adobe Font Metric Files

--- MORE TO FOLLOW ---
Enter your choices or press RETURN to display the next screen.

Choices (for example, 1 2 4-6):

    18) Local Printer Support

 - Reference Pages:
    19) Ref Pages: Admin/User
    20) Ref Pages: Programming
    21) Ref Pages: Realtime
    22) Ref Pages: Windows Admin/User
    23) Ref Pages: Windows Programming

 - Software Development:
    24) Additional Motif Demo Sources
    25) CDA(tm) Software Development
    26) CDA(tm) for X/Motif Development
    27) DEC C (cc -migrate)
    28) GNU Revision Control System
    29) LSM Software Development
    30) Realtime Software Development
    31) Software Development Environment
    32) Source Code Control System
    33) X Window Software Development

 - Supplemental Documentation:
    34) XIE Version 5 Online Documentation

 - System Administration:
    35) C2-Security
    36) C2-Security GUI
    37) Kernel Debugging Tools
    38) Obsolete Commands and Utilities
    39) Obsolete Locale databases
    40) Single-Byte European Locales
    41) System Accounting Utilities
    42) System Exercisers
    43) Verifier/Exerciser GUI
    44) Verifier/Exerciser Tool

 - Text Processing:
    45) Doc. Preparation Tools
    46) Doc. Preparation Tools Extensions

 - Windowing Environment:
    47) DECwindows 75dpi Fonts
    48) X Customizations for OEM

 - Windows Applications:
    49) Additional DECwindows Applications
    50) Additional X Applications

Or you may choose one of the following options:

    51) ALL mandatory and all optional subsets
    52) MANDATORY subsets only
```

```
    53) CANCEL selections and redisplay menus

Enter your choices or press RETURN to redisplay menus.

Choices (for example, 1 2 4-6): 51

You are installing the following mandatory subsets:

        Base System
        Base System - Hardware Support
        Hardware Kernel Header and Common Files
        Hardware Kernel Objects
        Kernel Header and Common Files
        POLYCTR advfs Kernel Objects
        Standard Kernel Objects
        Basic Networking Services
        NFS(tm) Utilities
        Compiler Back End
        POLYCTR advfs
        Adobe Fonts
        Basic X Environment
        DECwindows 100dpi Fonts
        X Fonts
        X Servers

You are installing the following optional subsets:

 - General Applications:
        Common Agent
        Computer Aided System Tutor
        GNU Emacs
        Local Area Transport (LAT)
        Logical Storage Manager
        Logical Storage Manager GUI
        Logical Volume Manager
        UNIX(tm) SVID2 Compatibility
        UNIX(tm) to UNIX(tm) Copy Facility

 - Kernel Build Environment:
        Logical Storage Manager Kernel Header and Common Files
        Logical Storage Manager Kernel Objects

 - Mail Applications:
        DECwindows Mail Interface
        RAND Corp. Mail Handler (MH)

 - Network-Server/Communications:
        Additional Networking Services
        Dataless Management Services
        Remote Installation Service

 - Printing Environment:
        Adobe Font Metric Files
        Local Printer Support

 - Reference Pages:
        Ref Pages: Admin/User
        Ref Pages: Programming
        Ref Pages: Realtime
        Ref Pages: Windows Admin/User
```

```
        Ref Pages: Windows Programming

Press RETURN to display the next screen:


 - Software Development:
        Additional Motif Demo Sources
        CDA(tm) Software Development
        CDA(tm) for X/Motif Development
        DEC C (cc -migrate)
        GNU Revision Control System
        LSM Software Development
        Realtime Software Development
        Software Development Environment
        Source Code Control System
        X Window Software Development

 - Supplemental Documentation:
        XIE Version 5 Online Documentation

 - System Administration:
        C2-Security
        C2-Security GUI
        Kernel Debugging Tools
        Obsolete Commands and Utilities
        Obsolete Locale databases
        Single-Byte European Locales
        System Accounting Utilities
        System Exercisers
        Verifier/Exerciser GUI
        Verifier/Exerciser Tool

 - Text Processing:
        Doc. Preparation Tools
        Doc. Preparation Tools Extensions

 - Windowing Environment:
        DECwindows 75dpi Fonts
        X Customizations for OEM

 - Windows Applications:
        Additional DECwindows Applications
        Additional X Applications

Is this correct? (y/n): y

Checking file system space required to install selected subsets:
      Working....Tue Jul 12 14:53:57 GMT 1994

File system space checked OK.

Base System
   Copying from ds9 (inet)
      Working....Tue Jul 12 14:54:29 GMT 1994
   Verifying
      Working....Tue Jul 12 14:55:57 GMT 1994

Base System - Hardware Support
   Copying from ds9 (inet)
      Working....Tue Jul 12 14:56:30 GMT 1994
```

```
   Verifying

Compiler Back End
   Copying from ds9 (inet)
      Working....Tue Jul 12 14:57:08 GMT 1994
   Verifying

Kernel Header and Common Files
   Copying from ds9 (inet)
      Working....Tue Jul 12 14:57:59 GMT 1994
   Verifying

Standard Kernel Objects
   Copying from ds9 (inet)
      Working....Tue Jul 12 14:58:56 GMT 1994
   Verifying

Hardware Kernel Objects
   Copying from ds9 (inet)
      Working....Tue Jul 12 14:59:47 GMT 1994
   Verifying

Hardware Kernel Header and Common Files
   Copying from ds9 (inet)
   Verifying

Logical Storage Manager Kernel Header and Common Files
   Copying from ds9 (inet)
   Verifying

Basic Networking Services
   Copying from ds9 (inet)
   Verifying

X Servers
   Copying from ds9 (inet)
      Working....Tue Jul 12 15:01:59 GMT 1994
   Verifying

Basic X Environment
   Copying from ds9 (inet)
      Working....Tue Jul 12 15:02:49 GMT 1994
   Verifying

X Fonts
   Copying from ds9 (inet)
      Working....Tue Jul 12 15:04:04 GMT 1994
   Verifying

DECwindows 100dpi Fonts
   Copying from ds9 (inet)
   Verifying

DECwindows 75dpi Fonts
   Copying from ds9 (inet)
   Verifying

Adobe Fonts
   Copying from ds9 (inet)
   Verifying
```

```
Additional Networking Services
   Copying from ds9 (inet)
   Verifying

NFS(tm) Utilities
   Copying from ds9 (inet)
   Verifying

Logical Storage Manager
   Copying from ds9 (inet)
   Verifying

POLYCTR advfs Kernel Objects
   Copying from ds9 (inet)
   Verifying

Logical Storage Manager Kernel Objects
   Copying from ds9 (inet)
   Verifying

Common Agent
   Copying from ds9 (inet)
   Verifying

System Accounting Utilities
   Copying from ds9 (inet)
   Verifying

Single-Byte European Locales
   Copying from ds9 (inet)
   Verifying

Obsolete Locale databases
   Copying from ds9 (inet)
   Verifying

System Exercisers
   Copying from ds9 (inet)
   Verifying

RAND Corp. Mail Handler (MH)
   Copying from ds9 (inet)
   Verifying

Kernel Debugging Tools
   Copying from ds9 (inet)
   Verifying

Local Printer Support
   Copying from ds9 (inet)
   Verifying

Adobe Font Metric Files
   Copying from ds9 (inet)
   Verifying

DEC C (cc -migrate)
   Copying from ds9 (inet)
   Verifying
```

```
Software Development Environment
   Copying from ds9 (inet)
      Working....Tue Jul 12 15:14:21 GMT 1994
   Verifying

CDA(tm) Software Development
   Copying from ds9 (inet)
   Verifying

LSM Software Development
   Copying from ds9 (inet)
   Verifying

Source Code Control System
   Copying from ds9 (inet)
   Verifying

Doc. Preparation Tools
   Copying from ds9 (inet)
   Verifying

Doc. Preparation Tools Extensions
   Copying from ds9 (inet)
   Verifying

UNIX(tm) SVID2 Compatibility
   Copying from ds9 (inet)
   Verifying

Local Area Transport (LAT)
   Copying from ds9 (inet)
   Verifying

Logical Volume Manager
   Copying from ds9 (inet)
   Verifying

POLYCTR advfs
   Copying from ds9 (inet)
   Verifying

Remote Installation Service
   Copying from ds9 (inet)
   Verifying

GNU Revision Control System
   Copying from ds9 (inet)
   Verifying

UNIX(tm) to UNIX(tm) Copy Facility
   Copying from ds9 (inet)
   Verifying

Additional X Applications
   Copying from ds9 (inet)
   Verifying

Additional DECwindows Applications
   Copying from ds9 (inet)
   Verifying
```

```
X Window Software Development
   Copying from ds9 (inet)
      Working....Tue Jul 12 15:22:29 GMT 1994
   Verifying

DECwindows Mail Interface
   Copying from ds9 (inet)
   Verifying

CDA(tm) for X/Motif Development
   Copying from ds9 (inet)
   Verifying

Additional Motif Demo Sources
   Copying from ds9 (inet)
   Verifying

Verifier/Exerciser Tool
   Copying from ds9 (inet)
   Verifying

Verifier/Exerciser GUI
   Copying from ds9 (inet)
   Verifying

GNU Emacs
   Copying from ds9 (inet)
      Working....Tue Jul 12 15:26:03 GMT 1994
   Verifying

Computer Aided System Tutor
   Copying from ds9 (inet)
   Verifying

Realtime Software Development
   Copying from ds9 (inet)
   Verifying

C2-Security
   Copying from ds9 (inet)
   Verifying

Dataless Management Services
   Copying from ds9 (inet)
   Verifying

Obsolete Commands and Utilities
   Copying from ds9 (inet)
   Verifying

C2-Security GUI
   Copying from ds9 (inet)
   Verifying

Logical Storage Manager GUI
   Copying from ds9 (inet)
   Verifying

X Customizations for OEM
   Copying from ds9 (inet)
```

```
   Verifying

XIE Version 5 Online Documentation
   Copying from ds9 (inet)
   Verifying

Ref Pages: Windows Programming
   Copying from ds9 (inet)
      Working....Tue Jul 12 15:31:39 GMT 1994
   Verifying

Ref Pages: Windows Admin/User
   Copying from ds9 (inet)
   Verifying

Ref Pages: Programming
   Copying from ds9 (inet)
      Working....Tue Jul 12 15:33:05 GMT 1994
   Verifying

Ref Pages: Admin/User
   Copying from ds9 (inet)
      Working....Tue Jul 12 15:33:57 GMT 1994
   Verifying

Ref Pages: Realtime
   Copying from ds9 (inet)
   Verifying

The installation procedure has successfully installed
the software subsets
```

System Configuration Log File H

The following is a sample configuration log file:

```
*** SYSTEM CONFIGURATION ***


Configuring "Base System " (OSFBASE300)

Configuring "Base System - Hardware Support " (OSFHWBASE300)

Configuring "Compiler Back End " (OSFCMPLRS300)

Configuring "Kernel Header and Common Files " (OSFBINCOM300)

Configuring "Standard Kernel Objects " (OSFBIN300)

Configuring "Hardware Kernel Objects " (OSFHWBIN300)

Configuring "Hardware Kernel Header and Common Files"
(OSFHWBINCOM300)

Configuring "Logical Storage Manager Kernel Header and Common
Files" (OSFLSMBINC
OM300)

Configuring "Basic Networking Services " (OSFCLINET300)

Configuring "X Servers " (OSFSER300)

Configuring "Basic X Environment " (OSFX11300)

Configuring "X Fonts " (OSFMITFONT300)

Configuring "DECwindows 100dpi Fonts " (OSFFONT15300)

Configuring "DECwindows 75dpi Fonts " (OSFFONT300)

Configuring "Adobe Fonts " (OSFDPSFONT300)

Configuring "Additional Networking Services " (OSFINET300)

Configuring "NFS(tm) Utilities " (OSFNFS300)

Configuring "Logical Storage Manager " (OSFLSMBASE300)

Configuring "POLYCTR advfs Kernel Objects " (OSFADVFSBIN300)

Configuring "Logical Storage Manager Kernel Objects" (OSFLSMBIN300)

Configuring "Common Agent " (OSFCOMAGENT300)
```

```
Configuring "System Accounting Utilities " (OSFACCT300)
Configuring "Single-Byte European Locales " (OSFEURLOC300)
Configuring "Obsolete Locale databases " (OSFCTABLOC300)
Configuring "System Exercisers " (OSFEXER300)
Configuring "RAND Corp. Mail Handler (MH) " (OSFMH300)
Configuring "Kernel Debugging Tools " (OSFKTOOLS300)
Configuring "Local Printer Support " (OSFPRINT300)
Configuring "Adobe Font Metric Files " (OSFAFM300)
Configuring "DEC C (cc -migrate) " (OSFDECC300)
Configuring "Software Development Environment " (OSFPGMR300)
Configuring "CDA(tm) Software Development " (OSFCDAPGMR300)
Configuring "LSM Software Development " (OSFLSMPGMR300)
Configuring "Source Code Control System " (OSFSCCS300)
Configuring "Doc. Preparation Tools " (OSFDCMT300)
Configuring "Doc. Preparation Tools Extensions " (OSFDCMTEXT300)
Configuring "UNIX(tm) SVID2 Compatibility " (OSFSVID2300)
Configuring "Local Area Transport (LAT) " (OSFLAT300)
Configuring "Logical Volume Manager " (OSFLVM300)
Configuring "POLYCTR advfs " (OSFADVFS300)
Configuring "Remote Installation Service " (OSFRIS300)
Configuring "GNU Revision Control System " (OSFRCS300)
Configuring "UNIX(tm) to UNIX(tm) Copy Facility " (OSFUUCP300)
Configuring "Additional X Applications " (OSFXMIT300)
Configuring "Additional DECwindows Applications " (OSFDECW300)
Configuring "X Window Software Development " (OSFXDEV300)
Configuring "DECwindows Mail Interface " (OSFXMAIL300)
Configuring "CDA(tm) for X/Motif Development " (OSFXCDADEV300)
Configuring "Additional Motif Demo Sources " (OSFMOTDEM300)
Configuring "Verifier/Exerciser Tool " (OSFVET300)
Configuring "Verifier/Exerciser GUI " (OSFXVET300)
```

```
Configuring "GNU Emacs " (OSFEMACS300)

Configuring "Computer Aided System Tutor " (OSFLEARN300)

Configuring "Realtime Software Development " (OSFRTDEV300)

Configuring "C2-Security " (OSFC2SEC300)

Configuring "Dataless Management Services " (OSFDMS300)

Configuring "Obsolete Commands and Utilities " (OSFOBSOLETE300)

Configuring "C2-Security GUI " (OSFXC2SEC300)

Configuring "Logical Storage Manager GUI " (OSFLSMX11300)

Configuring "X Customizations for OEM " (OSFXOEM300)

Configuring "XIE Version 5 Online Documentation " (OSFXIEDOC300)

Configuring "Ref Pages: Windows Programming " (OSFMANWOP300)

Configuring "Ref Pages: Windows Admin/User " (OSFMANWOS300)

Configuring "Ref Pages: Programming " (OSFMANOP300)

Configuring "Ref Pages: Admin/User " (OSFMANOS300)

Configuring "Ref Pages: Realtime " (OSFMANRT300)

*** SYSTEM NAME SPECIFICATION ***

Select the name of your system using alphanumeric characters.
The first character must be a letter.   For example, tinker.
Enter your system name:  aruba

You selected 'aruba' as the name of your system.
Is this correct? (y/n) [y]: y

*** TIME ZONE SPECIFICATION ***

***** Main Timezone Menu *****

------------------------------------------------------------------------

     1) Australia      2) Brazil        3) CET           4) Canada
     5) Chile          6) Cuba          7) EET           8) Egypt
     9) Factory       10) GB-Eire      11) GMT          12) Greenwich
    13) Hongkong      14) Iceland      15) Iran         16) Israel
    17) Jamaica       18) Japan        19) Libya        20) MET
    21) Mexico        22) NZ           23) NZ-CHAT      24) Navajo
    25) PRC           26) Poland       27) ROC          28) ROK
    29) Singapore     30) SystemV      31) Turkey       32) UCT
    33) US            34) UTC          35) Universal    36) W-SU
    37) WET           38) Zulu

     0) None of the above

------------------------------------------------------------------------
```

```
Select the number above that best describes your location: 33

***** US Timezone Menu *****

-----------------------------------------------------------------

 1) Alaska          2) Aleutian       3) Arizona      4) Central
 5) East-Indiana    6) Eastern        7) Hawaii       8) Indiana-Stark
 9) Michigan       10) Mountain      11) Pacific     12) Samoa

 0) None of the above

-----------------------------------------------------------------

Select the number above that best describes your location: 6

You selected US/Eastern as your time zone.
Is this correct? (y/n) [y]: y


*** DATE AND TIME SPECIFICATION ***

The current date and time should be specified using the following
format:

      yymmddhhmm

Use two digits for year (yy), month (mm), day (dd), hour (hh), and
minute (mm).  Enter the time in 24-hour format.  For example, 11:30
p.m. on July 25, 1993 would be entered as:

      9307252330

Enter the date and time: 9407121150

The date and time has been set to Tue Jul 12 11:50:20 EDT 1994
Is this correct? (y/n) [y]: y


*** KERNEL CONFIGURATION AND BUILD PROCEDURE ***


*** KERNEL OPTION SELECTION ***

    Selection   Kernel Option
-------------------------------------------------------------
        1       System V Devices
        2       Logical Volume Manager (LVM)
        3       Kernel Breakpoint Debugger (KDEBUG)
        4       Packetfilter driver (PACKETFILTER)
        5       STREAMS pckt module (PCKT)
        6       X/Open Transport Interface (XTISO, TIMOD, TIRDWR)
        7       File on File File System (FFM)
        8       ISO 9660 Compact Disc File System (CDFS)
        9       Audit Subsystem
        10      Logical Storage Manager (LSM)
        11      All of the above
        12      None of the above
-------------------------------------------------------------
```

```
Enter the selection number for each kernel option you want.
For example, 1 3 : 11


You selected the following kernel options:

        System V Devices
        Logical Volume Manager (LVM)
        Kernel Breakpoint Debugger (KDEBUG)
        Packetfilter driver (PACKETFILTER)
        STREAMS pckt module (PCKT)
        X/Open Transport Interface (XTISO, TIMOD, TIRDWR)
        File on File File System (FFM)
        ISO 9660 Compact Disc File System (CDFS)
        Audit Subsystem
        Logical Storage Manager (LSM)

Is that correct? (y/n) [y]: y

Do you want to edit the configuration file? (y/n) [n]: n


       The system will now automatically build a kernel
       and then reboot. This will take approximately 15
       minutes, depending on the processor type.

       When  the login prompt appears after the system
       has rebooted, use 'root' as the  login name and
       the SUPERUSER  password that was entered during
       this procedure, to log into the system.


*** PERFORMING KERNEL BUILD ***
        Working....Tue Jul 12 11:51:35 EDT 1994
        Working....Tue Jul 12 11:53:36 EDT 1994
        Working....Tue Jul 12 11:55:36 EDT 1994
```

Update Installation Log

The following is a sample of an update installation log. The number of files processed in an update installation can be greater than shown in this example and will take longer to process. A *Working...* message will be printed every two minutes to indicate that the update is proceeding. Do not use Ctrl/c to exit the installation unless you are certain that the installation has stalled for some reason.

```
      Working....Tue Jul 19 11:29:29 EDT 1994

The DEC OSF/1 V3.0 (Rev. 331) Update Installation will update the
following DEC OSF/1 products:

      DEC OSF/1 V2.0
      DEC OSF/1 V2.0B
      DEC OSF/1 V2.1
      DEC OSF/1 V2.1B

Digital Equipment Corporation recommends that you perform complete
system software backups before proceeding.

WARNING:  OSF-BASE  PAK  not installed.  The OSF-BASE PAK  must be
registered  before you  can use  DEC OSF/1 V3.0 (Rev. 331).  After
the update installation completes, refer to the License Management
Facility (LMF) section in the  Installation Guide  for information
about registering PAKS.

Press <RETURN> to review message again.
Do you want to continue the update installation? (y/n) []: y



******   Checking current state of system

Depending on the system configuration, this may take
up to 20 minutes...
      Working....Tue Jul 19 11:29:59 EDT 1994
      Working....Tue Jul 19 11:31:40 EDT 1994
      Working....Tue Jul 19 11:33:40 EDT 1994
      Working....Tue Jul 19 11:35:40 EDT 1994
      Working....Tue Jul 19 11:37:41 EDT 1994
      Working....Tue Jul 19 11:39:42 EDT 1994
      Working....Tue Jul 19 11:41:10 EDT 1994
      Working....Tue Jul 19 11:43:10 EDT 1994



Unprotected customized system files have been found on
this system and have been saved to  'filename.PreUPD'.
```

```
A listing of the files has been logged in
/var/adm/smlogs/upd_custom_files.

After the update installation has completed,  use the
Update  Administration  Utility  (/usr/sbin/updadmin)
to perform system administration tasks on these files.


******   Updating system to DEC OSF/1 V3.0 (Rev. 331)
      Working....Tue Jul 19 11:44:03 EDT 1994

Base System
   Copying from ds9 (inet)
      Working....Tue Jul 19 11:46:57 EDT 1994
   Verifying
      Working....Tue Jul 19 11:49:05 EDT 1994

Base System - Hardware Support
   Copying from ds9 (inet)
      Working....Tue Jul 19 11:49:51 EDT 1994
   Verifying

Compiler Back End
   Copying from ds9 (inet)
      Working....Tue Jul 19 11:50:30 EDT 1994
   Verifying

Kernel Header and Common Files
   Copying from ds9 (inet)
      Working....Tue Jul 19 11:51:18 EDT 1994
   Verifying

Standard Kernel Objects
   Copying from ds9 (inet)
      Working....Tue Jul 19 11:52:26 EDT 1994
   Verifying

Hardware Kernel Objects
   Copying from ds9 (inet)
      Working....Tue Jul 19 11:53:30 EDT 1994
   Verifying

Hardware Kernel Header and Common Files
   Copying from ds9 (inet)
   Verifying

Basic Networking Services
   Copying from ds9 (inet)
   Verifying

X Servers
   Copying from ds9 (inet)
      Working....Tue Jul 19 11:55:18 EDT 1994
   Verifying

Basic X Environment
   Copying from ds9 (inet)
      Working....Tue Jul 19 11:56:10 EDT 1994
   Verifying
```

```
X Fonts
   Copying from ds9 (inet)
      Working....Tue Jul 19 11:57:30 EDT 1994
   Verifying

DECwindows 100dpi Fonts
   Copying from ds9 (inet)
   Verifying

Adobe Fonts
   Copying from ds9 (inet)
   Verifying

Additional Networking Services
   Copying from ds9 (inet)
   Verifying

NFS(tm) Utilities
   Copying from ds9 (inet)
      Working....Tue Jul 19 12:00:03 EDT 1994
   Verifying

System Exercisers
   Copying from ds9 (inet)
      Working....Tue Jul 19 12:00:47 EDT 1994
   Verifying

RAND Corp. Mail Handler (MH)
   Copying from ds9 (inet)
      Working....Tue Jul 19 12:01:25 EDT 1994
   Verifying

Kernel Debugging Tools
   Copying from ds9 (inet)
      Working....Tue Jul 19 12:02:16 EDT 1994
   Verifying

Local Printer Support
   Copying from ds9 (inet)
      Working....Tue Jul 19 12:02:55 EDT 1994
   Verifying

Software Development Environment
   Copying from ds9 (inet)
      Working....Tue Jul 19 12:03:36 EDT 1994
   Verifying

Doc. Preparation Tools
   Copying from ds9 (inet)
   Verifying

Doc. Preparation Tools Extensions
   Copying from ds9 (inet)
   Verifying

Local Area Transport (LAT)
   Copying from ds9 (inet)
   Verifying

UNIX(tm) to UNIX(tm) Copy Facility
```

```
   Copying from ds9 (inet)
      Working....Tue Jul 19 12:06:43 EDT 1994
   Verifying

Additional X Applications
   Copying from ds9 (inet)
   Verifying

Additional DECwindows Applications
   Copying from ds9 (inet)
   Verifying

X Window Software Development
   Copying from ds9 (inet)
      Working....Tue Jul 19 12:08:34 EDT 1994
   Verifying

DECwindows Mail Interface
   Copying from ds9 (inet)
   Verifying

GNU Emacs
   Copying from ds9 (inet)
      Working....Tue Jul 19 12:10:13 EDT 1994
   Verifying

Ref Pages: Windows Programming
   Copying from ds9 (inet)
      Working....Tue Jul 19 12:11:03 EDT 1994
   Verifying

Ref Pages: Windows Admin/User
   Copying from ds9 (inet)
   Verifying

Ref Pages: Programming
   Copying from ds9 (inet)
      Working....Tue Jul 19 12:12:36 EDT 1994
   Verifying

Ref Pages: Admin/User
   Copying from ds9 (inet)
      Working....Tue Jul 19 12:13:41 EDT 1994
   Verifying

Ref Pages: Realtime
   Copying from ds9 (inet)
   Verifying

      *** Merging new file ./etc/.new..gettydefs into
               existing ./etc/.proto..gettydefs

            adding new version mechanism to console entry

            Merge completed successfully.

      *** Merging new file ./etc/.new..sysconfigtab into
               existing ./etc/.proto..sysconfigtab
```

```
      Merge completed successfully.

*** Merging new file ./etc/sec/.new..audit_events into
          existing ./etc/sec/.proto..audit_events


      Merge completed successfully.

*** Merging new file ./etc/sec/.new..event_aliases into
          existing ./etc/sec/.proto..event_aliases


      Merge completed successfully.

*** Merging new file ./sbin/init.d/.new..rmtmpfiles into
          existing ./sbin/init.d/.proto..rmtmpfiles


      Merge completed successfully.

*** Merging new file ./usr/var/shlib/.new..so_locations into
          existing ./usr/var/shlib/.proto..so_locations


      Merge completed successfully.

*** Merging new file ./usr/share/lib/kernel_options/
                     .new..kernel_options.db into
          existing ./usr/share/lib/kernel_options/
                      .proto..kernel_options.db

      removing Processors option
      removing obsolete netthreads value
      adding SMP and Realtime options
      removing obsolete RT option
      removing obsolete realtime options
      removing mandatory Logical Volume Manager option
      adding optional Logical Volume Manager option
      adding Logical Storage Manager (LSM) option
      deleting obsolete Streams Protocol options
      adding new Streams modules options
      adding Clist Terminal subsystem option
      deleting Streams Sockets Coexistance option
      adding Data Link Bridge option
      adding System V Devices option

      Merge completed successfully.

*** Merging new file ./usr/sys/conf/.new..files into
          existing ./usr/sys/conf/.proto..files


      Merge completed successfully.

*** Merging new file ./usr/sys/conf/.new..param.c into
          existing ./usr/sys/conf/.proto..param.c


      Merge completed successfully.
```

```
*** Merging new file ./usr/sys/conf/alpha/.new..files into
          existing ./usr/sys/conf/alpha/.proto..files


      Merge completed successfully.

*** Merging new file ./usr/sys/io/common/.new..conf.c into
          existing ./usr/sys/io/common/.proto..conf.c


      Merge completed successfully.

*** Merging new file ./usr/var/X11/.new..Xserver.conf into
          existing ./usr/var/X11/.proto..Xserver.conf


      Merge completed successfully.

*** Merging new file ./usr/lib/X11/app-defaults/
                        .new..DXConsole into
          existing ./usr/lib/X11/app-defaults/
                        .proto..DXConsole


      Merge completed successfully.

*** Merging new file ./usr/lib/X11/app-defaults/
                        .new..DXpause into
          existing ./usr/lib/X11/app-defaults/
                        .proto..DXpause

      Replacing .proto..DXpause with .new..DXpause.
      Customizations to .proto..DXpause should be
      manually included from .proto..DXpause.PreMRG.

      Merge completed successfully.

*** Merging new file ./usr/var/X11/xdm/.new..Xservers into
          existing ./usr/var/X11/xdm/.proto..Xservers

      Merge completed successfully.

*** Merging new file ./usr/lib/X11/config/.new..osf1.cf into
          existing ./usr/lib/X11/config/.proto..osf1.cf


      Merge completed successfully.


Update Installation complete with loading of subsets.
Rebooting system with DEC OSF/1 V3.0 (Rev. 331)
generic kernel for configuration phase...

Exiting Update Installation...
```

Sample File Logs from Update Installations J

J.1 List of Protected .new.. Files

```
./.new...cshrc
./.new...login
./.new..DXsession
./etc/.new..TIMEZONE
./etc/.new..acucap
./etc/.new..autopush.conf
./etc/.new..binlog.conf
./etc/.new..disktab
./etc/.new..exports
./etc/.new..fstab
./etc/.new..ftpusers
./etc/.new..gettydefs
./etc/.new..group
./etc/.new..hosts
./etc/.new..hosts.equiv
./etc/.new..inetd.conf
./etc/.new..inittab
./etc/.new..lprsetup.dat
./etc/.new..magic
./etc/.new..motd
./etc/.new..networks
./etc/.new..ntp.conf
./etc/.new..passwd
./etc/.new..phones
./etc/.new..profile
./etc/.new..protocols
./etc/.new..rc.config
./etc/.new..remote
./etc/.new..rpc
./etc/.new..securettys
./etc/.new..services
./etc/.new..setup.conf
./etc/.new..shells
./etc/.new..strsetup.conf
./etc/.new..svc.conf
./etc/.new..sysconfigtab
./etc/.new..syslog.conf
./etc/.new..ultrix_login
./etc/.new..ultrix_path
./etc/.new..ultrix_profile
./etc/auth/subsystems/.new..users
./etc/auth/system/.new..authorize
./etc/auth/system/.new..default
./etc/auth/system/.new..devassign
./etc/auth/system/.new..files
```

```
./etc/auth/system/.new..subsystems
./etc/auth/system/.new..ttys
./etc/sec/.new..audit_events
./etc/sec/.new..event_aliases
./etc/sia/.new..bsd_matrix.conf
./etc/sia/.new..matrix.conf
./sbin/.new..bcheckrc
./sbin/.new..rc0
./sbin/.new..rc2
./sbin/.new..rc3
./sbin/init.d/.new..lat
./sbin/init.d/.new..rmtmpfiles
./tcb/files/auth/a/.new..adm
./tcb/files/auth/a/.new..auth
./tcb/files/auth/b/.new..bin
./tcb/files/auth/c/.new..cron
./tcb/files/auth/d/.new..daemon
./tcb/files/auth/l/.new..lp
./tcb/files/auth/r/.new..ris
./tcb/files/auth/r/.new..root
./tcb/files/auth/t/.new..tcb
./tcb/files/auth/u/.new..uucp
./tcb/files/auth/u/.new..uucpa
./usr/lib/X11/.new..system.mwmrc
./usr/lib/X11/app-defaults/.new..Bitmap
./usr/lib/X11/app-defaults/.new..Bitmap-color
./usr/lib/X11/app-defaults/.new..Chooser
./usr/lib/X11/app-defaults/.new..Clock-color
./usr/lib/X11/app-defaults/.new..DXBookreader
./usr/lib/X11/app-defaults/.new..DXBookreader_prolog.ps
./usr/lib/X11/app-defaults/.new..DXConsole
./usr/lib/X11/app-defaults/.new..DXMail
./usr/lib/X11/app-defaults/.new..DXcalc
./usr/lib/X11/app-defaults/.new..DXcalendar
./usr/lib/X11/app-defaults/.new..DXcardfiler
./usr/lib/X11/app-defaults/.new..DXclock
./usr/lib/X11/app-defaults/.new..DXlsm
./usr/lib/X11/app-defaults/.new..DXnotepad
./usr/lib/X11/app-defaults/.new..DXpaint
./usr/lib/X11/app-defaults/.new..DXpause
./usr/lib/X11/app-defaults/.new..DXpresto
./usr/lib/X11/app-defaults/.new..DXprint
./usr/lib/X11/app-defaults/.new..DXsession
./usr/lib/X11/app-defaults/.new..DXterm
./usr/lib/X11/app-defaults/.new..DxDiff
./usr/lib/X11/app-defaults/.new..Editres
./usr/lib/X11/app-defaults/.new..Editres-color
./usr/lib/X11/app-defaults/.new..FontSelect
./usr/lib/X11/app-defaults/.new..MailScanFormat
./usr/lib/X11/app-defaults/.new..Mwm
./usr/lib/X11/app-defaults/.new..Mwm_bw
./usr/lib/X11/app-defaults/.new..Mwm_gray
./usr/lib/X11/app-defaults/.new..Viewres
./usr/lib/X11/app-defaults/.new..XCalc
./usr/lib/X11/app-defaults/.new..XCalc-color
./usr/lib/X11/app-defaults/.new..XClipboard
./usr/lib/X11/app-defaults/.new..XClock
./usr/lib/X11/app-defaults/.new..XConsole
./usr/lib/X11/app-defaults/.new..XFontSel
./usr/lib/X11/app-defaults/.new..XIsso
```

```
./usr/lib/X11/app-defaults/.new..XLoad
./usr/lib/X11/app-defaults/.new..XLogo
./usr/lib/X11/app-defaults/.new..XLogo-color
./usr/lib/X11/app-defaults/.new..XSysAdmin
./usr/lib/X11/app-defaults/.new..XTerm
./usr/lib/X11/app-defaults/.new..Xdefaults
./usr/lib/X11/app-defaults/.new..Xedit
./usr/lib/X11/app-defaults/.new..Xfd
./usr/lib/X11/app-defaults/.new..Xgc
./usr/lib/X11/app-defaults/.new..Xmag
./usr/lib/X11/app-defaults/.new..Xman
./usr/lib/X11/app-defaults/.new..Xmh
./usr/lib/X11/app-defaults/.new..dxcalendar_prolog.ps
./usr/lib/X11/config/.new..osf1.cf
./usr/lib/X11/config/.new..site.def
./usr/lib/X11/twm/.new..system.twmrc
./usr/share/lib/.new..Mail.rc
./usr/share/lib/.new..termcap
./usr/share/lib/kernel_options/.new..kernel_options.db
./usr/share/lib/terminfo/.new..dec.ti
./usr/shlib/.new..so_locations
./usr/sys/conf/.new..files
./usr/sys/conf/.new..param.c
./usr/sys/conf/alpha/.new..files
./usr/sys/io/common/.new..conf.c
./usr/sys/streams/.new..str_config.c
./usr/var/X11/.new..Xserver.conf
./usr/var/X11/fs/.new..config
./usr/var/X11/xdm/.new..GiveConsole
./usr/var/X11/xdm/.new..TakeConsole
./usr/var/X11/xdm/.new..Xaccess
./usr/var/X11/xdm/.new..Xkeymaps
./usr/var/X11/xdm/.new..Xresources
./usr/var/X11/xdm/.new..Xservers
./usr/var/X11/xdm/.new..Xservers.fs
./usr/var/X11/xdm/.new..Xsession
./usr/var/X11/xdm/.new..Xsetup_0
./usr/var/X11/xdm/.new..xdm-config
./usr/var/X11/xdm/.new..xdm-config.fs
./usr/var/adm/.new...login
./usr/var/adm/.new...profile
./usr/var/adm/.new..utmp
./usr/var/adm/.new..wtmp
./usr/var/adm/cron/.new...proto
./usr/var/adm/cron/.new..at.deny
./usr/var/adm/cron/.new..cron.deny
./usr/var/adm/cron/.new..log
./usr/var/adm/cron/.new..queuedefs
./usr/var/adm/sendmail/.new..aliases
./usr/var/adm/sendmail/.new..sendmail.cf
./usr/var/adm/sendmail/.new..sendmail.st
./usr/var/shlib/.new..so_locations
./usr/var/spool/cron/crontabs/.new..adm
./usr/var/spool/cron/crontabs/.new..root
./usr/var/spool/cron/crontabs/.new..sys
./usr/var/yp/.new..Makefile
./usr/var/yp/.new..ypxfr_1perday
./usr/var/yp/.new..ypxfr_1perhour
./usr/var/yp/.new..ypxfr_2perday
```

J.2 Sample Customized File List

```
==========================================
= Unprotected Customized OSFFONT15 Files
==========================================
./usr/lib/X11/fonts/decwin/100dpi/fonts.dir.PreUPD
```

J.3 Sample Obsolete File List

```
==========================================
= Files no longer shipped in OSFBASE
==========================================
./usr/sbin/setrah
./usr/lib/nls/msg/en_US.ISO8859-1/cfgmgr.cat
./usr/bin/yearistype
./upgrade0
./sbin/installupgrade

==========================================
= Files no longer shipped in OSFBIN
==========================================

==========================================
= Files no longer shipped in OSFBINCOM
==========================================

==========================================
= Files no longer shipped in OSFCLINET
==========================================
./usr/sbin/trn_mom
./usr/sbin/snmpsetup
./usr/sbin/snmp_pe
./usr/sbin/momgen
./usr/sbin/mold
./usr/sbin/internet_mom
./usr/sbin/fddi_mom
./sbin/rc3.d/S50common_agent
./sbin/rc2.d/K10common_agent
./sbin/rc0.d/K15common_agent
./etc/eca/snmp_pe.conf
./etc/eca/mir.dat
./etc/eca/internet_mom.conf
./etc/eca/builtin_types.dat

==========================================
= Files no longer shipped in OSFCMPLRS
==========================================
./usr/ccs/lib/vmcrt0.o
./usr/ccs/lib/vcrt0.o
./usr/ccs/lib/pmcrt0.o
./usr/ccs/lib/pcrt0.o
./usr/ccs/lib/cmplrs/cc/vmcrt0.o
./usr/ccs/lib/cmplrs/cc/vcrt0.o
./usr/ccs/lib/cmplrs/cc/pmcrt0.o
./usr/ccs/lib/cmplrs/cc/pcrt0.o

==========================================
```

```
= Files no longer shipped in OSFDECW
============================================
./usr/lib/X11/uid/lwk_reg_DwCalendar.uid
./usr/lib/X11/uid/lwk_reg_DWCF.uid

============================================
= Files no longer shipped in OSFDPSFONT
============================================
./usr/lib/X11/DPS/PSres.upr

============================================
= Files no longer shipped in OSFEMACS
============================================
./usr/lib/emacs/etc/DOC-18.59.2

============================================
= Files no longer shipped in OSFEXER
============================================
./usr/field/rt

============================================
= Files no longer shipped in OSFHWBIN
============================================

============================================
= Files no longer shipped in OSFINET
============================================
./usr/examples/packetfilter/pfopen.c

============================================
= Files no longer shipped in OSFKTOOLS
============================================
./usr/sbin/gprof

============================================
= Files no longer shipped in OSFMANOP
============================================
./usr/share/man/man3/wait.3
./usr/share/man/man3/unlink.3
./usr/share/man/man3/system.3f
./usr/share/man/man3/sleep.3f
./usr/share/man/man3/signal.3
./usr/share/man/man3/qsort.3f
./usr/share/man/man3/loc.3
./usr/share/man/man3/link.3
./usr/share/man/man3/kill.3
./usr/share/man/man3/itime.3
./usr/share/man/man3/idate.3
./usr/share/man/man3/iargc.3
./usr/share/man/man3/getpid.3
./usr/share/man/man3/getlog.3
./usr/share/man/man3/getenv.3f
./usr/share/man/man3/getarg.3
./usr/share/man/man3/fork.3
./usr/share/man/man3/flush.3
./usr/share/man/man3/fdate.3
./usr/share/man/man3/chmod.3
./usr/share/man/man3/chdir.3
./usr/share/man/man3/alarm.3f
./usr/share/man/man3/access.3
```

```
./usr/share/man/man3/abort.3f
./usr/share/man/.OSFMANOP200.whatis

============================================
= Files no longer shipped in OSFMANOS
============================================
./usr/share/man/man8/kdebug.8
./usr/share/man/man8/diskpart.8
./usr/share/man/man4/prpwd.4
./usr/share/man/man1/prof2.1
./usr/share/man/man1/fddi_config.1
./usr/share/man/.OSFMANOS200.whatis

============================================
= Files no longer shipped in OSFMANWOP
============================================
./usr/share/man/.OSFMANWOP200.whatis

============================================
= Files no longer shipped in OSFMANWOS
============================================
./usr/share/man/man1/Xconsole.1X
./usr/share/man/.OSFMANWOS200.whatis

============================================
= Files no longer shipped in OSFPGMR
============================================
./usr/share/doclib/dps/DPS.pswrap.ps
./usr/share/doclib/dps/DPS.perspective.ps
./usr/share/doclib/dps/DPS.clientlib.ps
./usr/share/doclib/dps/DPS.Xtoolkit.ps
./usr/share/doclib/dps/DPS.Xsupplement.ps
./usr/lib/nls/msg/en_US.ISO8859-1/lint.cat
./usr/include/wstring.h
./usr/include/pcc.h
./usr/include/jctype.h
./usr/include/gmon.h
./usr/include/disktab.h

============================================
= Files no longer shipped in OSFSER
============================================
./usr/lib/X11/DPS/DPSVM.upr

============================================
= Files no longer shipped in OSFX11
============================================
./usr/lib/X11/uid/lwk_reg_Bookreader.uid
./usr/lib/X11/keymaps/us_pcxalka.decw_keymap
./usr/lib/X11/keymaps/us_lk443aa.decw_keymap
./usr/lib/X11/keymaps/us_lk421aa.decw_keymap
./usr/lib/X11/keymaps/us_lk401aa.decw_keymap
./usr/lib/X11/keymaps/us_lk201re.decw_keymap
./usr/lib/X11/keymaps/uk_pcxalae.decw_keymap
./usr/lib/X11/keymaps/uk_lk444ae.decw_keymap
./usr/lib/X11/keymaps/uk_lk421aa.decw_keymap
./usr/lib/X11/keymaps/uk_lk401aa.decw_keymap
./usr/lib/X11/keymaps/uk_lk201re.decw_keymap
./usr/lib/X11/keymaps/swiss_german_pcxalmh.decw_keymap
./usr/lib/X11/keymaps/swiss_german_lk444mh.decw_keymap
```

```
./usr/lib/X11/keymaps/swiss_german_lk401al_tw.decw_keymap
./usr/lib/X11/keymaps/swiss_german_lk401al_dp.decw_keymap
./usr/lib/X11/keymaps/swiss_german_lk201ll_tw.decw_keymap
./usr/lib/X11/keymaps/swiss_german_lk201ll_dp.decw_keymap
./usr/lib/X11/keymaps/swiss_french_pcxalap.decw_keymap
./usr/lib/X11/keymaps/swiss_french_lk444ap.decw_keymap
./usr/lib/X11/keymaps/swiss_french_lk401ak_tw.decw_keymap
./usr/lib/X11/keymaps/swiss_french_lk401ak_dp.decw_keymap
./usr/lib/X11/keymaps/swiss_french_lk201lk_tw.decw_keymap
./usr/lib/X11/keymaps/swiss_french_lk201lk_dp.decw_keymap
./usr/lib/X11/keymaps/swedish_pcxalma.decw_keymap
./usr/lib/X11/keymaps/swedish_lk444ma.decw_keymap
./usr/lib/X11/keymaps/swedish_lk401am_tw.decw_keymap
./usr/lib/X11/keymaps/swedish_lk401am_dp.decw_keymap
./usr/lib/X11/keymaps/swedish_lk201nm_tw.decw_keymap
./usr/lib/X11/keymaps/swedish_lk201nm_dp.decw_keymap
./usr/lib/X11/keymaps/swedish_lk201lm_tw.decw_keymap
./usr/lib/X11/keymaps/swedish_lk201lm_dp.decw_keymap
./usr/lib/X11/keymaps/spanish_pcxalks.decw_keymap
./usr/lib/X11/keymaps/spanish_lk444ks.decw_keymap
./usr/lib/X11/keymaps/spanish_lk401as_tw.decw_keymap
./usr/lib/X11/keymaps/spanish_lk401as_dp.decw_keymap
./usr/lib/X11/keymaps/spanish_lk201ls_tw.decw_keymap
./usr/lib/X11/keymaps/spanish_lk201ls_dp.decw_keymap
./usr/lib/X11/keymaps/portuguese_pcxalkv.decw_keymap
./usr/lib/X11/keymaps/portuguese_lk444kv.decw_keymap
./usr/lib/X11/keymaps/portuguese_lk401av.decw_keymap
./usr/lib/X11/keymaps/portuguese_lk201lv.decw_keymap
./usr/lib/X11/keymaps/norwegian_pcxalkn.decw_keymap
./usr/lib/X11/keymaps/norwegian_lk444kn.decw_keymap
./usr/lib/X11/keymaps/norwegian_lk401an_tw.decw_keymap
./usr/lib/X11/keymaps/norwegian_lk401an_dp.decw_keymap
./usr/lib/X11/keymaps/norwegian_lk201rn_tw.decw_keymap
./usr/lib/X11/keymaps/norwegian_lk201rn_dp.decw_keymap
./usr/lib/X11/keymaps/norwegian_lk201ln_tw.decw_keymap
./usr/lib/X11/keymaps/norwegian_lk201ln_dp.decw_keymap
./usr/lib/X11/keymaps/north_american_lk201la.decw_keymap
./usr/lib/X11/keymaps/italian_pcxalki.decw_keymap
./usr/lib/X11/keymaps/italian_lk444ki.decw_keymap
./usr/lib/X11/keymaps/italian_lk401ai_tw.decw_keymap
./usr/lib/X11/keymaps/italian_lk401ai_dp.decw_keymap
./usr/lib/X11/keymaps/italian_lk201li_tw.decw_keymap
./usr/lib/X11/keymaps/italian_lk201li_dp.decw_keymap
./usr/lib/X11/keymaps/icelandic_lk201lu_tw.decw_keymap
./usr/lib/X11/keymaps/icelandic_lk201lu_dp.decw_keymap
./usr/lib/X11/keymaps/french_pcxalkp.decw_keymap
./usr/lib/X11/keymaps/french_lk444kp.decw_keymap
./usr/lib/X11/keymaps/french_canadian_pcxalac.decw_keymap
./usr/lib/X11/keymaps/french_canadian_lk444ac.decw_keymap
./usr/lib/X11/keymaps/flemish_lk401ab_tw.decw_keymap
./usr/lib/X11/keymaps/flemish_lk401ab_dp.decw_keymap
./usr/lib/X11/keymaps/flemish_lk201lb_tw.decw_keymap
./usr/lib/X11/keymaps/flemish_lk201lb_dp.decw_keymap
./usr/lib/X11/keymaps/finnish_pcxalca.decw_keymap
./usr/lib/X11/keymaps/finnish_lk444ca.decw_keymap
./usr/lib/X11/keymaps/finnish_lk401af_tw.decw_keymap
./usr/lib/X11/keymaps/finnish_lk401af_dp.decw_keymap
./usr/lib/X11/keymaps/finnish_lk201nx_tw.decw_keymap
./usr/lib/X11/keymaps/finnish_lk201nx_dp.decw_keymap
./usr/lib/X11/keymaps/finnish_lk201lf_tw.decw_keymap
```

```
./usr/lib/X11/keymaps/finnish_lk201lf_dp.decw_keymap
./usr/lib/X11/keymaps/dutch_us_lk401ah.decw_keymap
./usr/lib/X11/keymaps/dutch_uk_lk401ah.decw_keymap
./usr/lib/X11/keymaps/dutch_pcxalgh.decw_keymap
./usr/lib/X11/keymaps/dutch_lk444gh.decw_keymap
./usr/lib/X11/keymaps/dutch_lk201nh.decw_keymap
./usr/lib/X11/keymaps/dutch_lk201lh_tw.decw_keymap
./usr/lib/X11/keymaps/dutch_lk201lh_dp.decw_keymap
./usr/lib/X11/keymaps/danish_pcxalkd.decw_keymap
./usr/lib/X11/keymaps/danish_lk444kd.decw_keymap
./usr/lib/X11/keymaps/danish_lk401ad_tw.decw_keymap
./usr/lib/X11/keymaps/danish_lk401ad_dp.decw_keymap
./usr/lib/X11/keymaps/danish_lk201rd_tw.decw_keymap
./usr/lib/X11/keymaps/danish_lk201rd_dp.decw_keymap
./usr/lib/X11/keymaps/danish_lk201ld_tw.decw_keymap
./usr/lib/X11/keymaps/danish_lk201ld_dp.decw_keymap
./usr/lib/X11/keymaps/canadian_french_lk401ac_tw.decw_keymap
./usr/lib/X11/keymaps/canadian_french_lk401ac_dp.decw_keymap
./usr/lib/X11/keymaps/canadian_french_lk201lc_tw.decw_keymap
./usr/lib/X11/keymaps/canadian_french_lk201lc_dp.decw_keymap
./usr/lib/X11/keymaps/canadian_english_lk401aq_tw.decw_keymap
./usr/lib/X11/keymaps/canadian_english_lk401aq_dp.decw_keymap
./usr/lib/X11/keymaps/british_lk201le_tw.decw_keymap
./usr/lib/X11/keymaps/british_lk201le_dp.decw_keymap
./usr/lib/X11/keymaps/belgian_pcxalkb.decw_keymap
./usr/lib/X11/keymaps/belgian_lk444kb.decw_keymap
./usr/lib/X11/keymaps/belgian_french_lk401ap_tw.decw_keymap
./usr/lib/X11/keymaps/belgian_french_lk401ap_dp.decw_keymap
./usr/lib/X11/keymaps/belgian_french_lk201lp_tw.decw_keymap
./usr/lib/X11/keymaps/belgian_french_lk201lp_dp.decw_keymap
./usr/lib/X11/keymaps/austrian_german_pcxalkg.decw_keymap
./usr/lib/X11/keymaps/austrian_german_lk444kg.decw_keymap
./usr/lib/X11/keymaps/austrian_german_lk401ag.decw_keymap
./usr/lib/X11/keymaps/austrian_german_lk201ng_tw.decw_keymap
./usr/lib/X11/keymaps/austrian_german_lk201ng_dp.decw_keymap
./usr/lib/X11/keymaps/austrian_german_lk201lg_tw.decw_keymap
./usr/lib/X11/keymaps/austrian_german_lk201lg_dp.decw_keymap
./usr/lib/X11/japanese/Codeset
./usr/lib/X11/japan/Codeset
./usr/lib/X11/ja_JP.SJIS/Codeset
./usr/lib/X11/ja_JP.EUC/Codeset
./usr/lib/X11/ja/Codeset
./usr/lib/X11/C/Codeset
./usr/bin/X11/getcons

============================================
= Files no longer shipped in OSFXDEV
============================================
./usr/doc/motif/Motif-1.2.2.notes.ps

============================================
= Files no longer shipped in OSFXMIT
============================================
./sbin/init.PreUPD
./sbin/sh.PreUPD

.EE
```

Index

A

accessing
devices in standalone environment, 7–5
online documentation, 6–14, 6–20
accounts
adding a user account to the system, 6–28
addgroup utility, 6–28
adding
a user to your system, 6–27
groups to the system, 6–28
users, 6–16
additional applications
installing, C–1
adduser program, 6–27
Advanced File System
See also AdvFS
advanced installation
default location for swap space, 5–9
default location for /usr file system, 5–9
defined, 1–7
example log file, G–1 to G–14
for dataless management, 1–5
installing mandatory and optional subsets, 5–17
performing, 5–1
AdvFS
choosing as file system type for root, 5–6
AdvFS (cont.)
choosing as file system type for /usr, 5–10
choosing as file system type for var, 5–14
defined, 5–6
information about, xvii
kernel option, 6–8
allocating
disk space, 3–1
file systems during installation, 5–9
second swap space, 5–12
separate var area for DMS server, 5–13
space for user files, 3–10
swap space, 3–4
/usr file system, 3–9, 5–10
var file system, 3–6, 5–13
Atom performance analysis tool, C–2
audit subsystem, 6–9
availability PAK, 6–13

B

base operating system subsets, B–1
basic installation
defined, 1–6
example log file, F–1
installing mandatory subsets, 5–15
performing, 5–1
restrictions on system disk, 5–4

BIND setup, 6–26
block size, 3–1
Bookreader application
description of the subset containing the, B–1
viewing files on a server system, 6–21
viewing files on a workstation, 6–20
books
viewing online, 6–20
boot block
restoring, 7–2
boot command sequence
during installation, 5–9
boot_osflags variable, 6–10
booting, 4–1
alternate kernel, 4–2
DEC 2000 processor, 4–2
DEC 2100 processor, 4–6
DEC 3000 processor, 4–10
DEC 4000 processor, 4–14
DEC 7000 and DEC 10000 processors, 4–17
over the network, 4–1
problems encountered during, 4–2
processor-specific instructions, 4–2
bootptab file
editing after update installation, 2–21
Bourne shell
in the standalone environment, 1–9
building
new root file system in standalone environment, 7–6
building the kernel, 6–7

C

C2 security, 6–30
CD-ROM optical disc, 1–4
determining device name of, 2–4
installing subsets, 5–15
mounting via fstab file, 2–8
unmounting before removing, 5–21
CDFS, 6–9
Chinese software subsets, C–19
choosing
a superuser password, 6–4
a time zone for your system, 6–5
file system type for root, 5–6
file system type for /usr, 5–10
file system type for var, 5–14
system disk, 5–5
type of installation to perform, 5–1
client
registering as, 4–1
Cobol Run-Time Support Library
installing, C–7
commands
available in standalone environment, 7–4
Compiler Development Enhancements
installing, C–3
configuration file
editing, 6–10
realtime preemption, 6–30
configuration log file, H–1
configuring the system, 6–1
configuring the system for general use, 6–16
console terminal
defined, 1–3
crash dumps, 3–5
creating
device special files, 7–5

creating (cont.)
new file system in standalone environment, 7–7
current date and time
entering for the system, 6–6
customizations
manually merging after update install, 2–2
customized files
preserving during update installation, 2–1
Czech software subsets, C–13

D

data disk
defined, 1–2
Data Link Bridge, 6–8
dataless management
allocating file systems on server, 5–13
allocating var area for, 3–6
performing advanced installation, 1–5
space requirements, 3–8
date
setting during system configuration, 6–3
date and time
entering for the system, 6–6
debugger
kernel breakpoint, 6–8
DEC 2000 processor
booting from CD-ROM, 4–4
booting from the network, 4–5
clearing the boot flags, 4–2
resetting the flags variables, 4–2
DEC 2100
running EISA configuration utility, 4–6
DEC 2100 processor
booting from CD-ROM, 4–6
booting from the network, 4–8
DEC 2100 processor (cont.)
clearing the boot flags, 4–6
DEC 3000 processor
booting from CD-ROM, 4–10
booting from the network, 4–11
clearing the boot flags, 4–10
preparing for installation, 4–1
resetting the flags variables, 4–10
DEC 4000 processor
booting from CD-ROM, 4–14
booting from the network, 4–15
clearing the boot flags, 4–14
preparing for installation, 4–1
DEC 7000 processor
booting from CD-ROM, 4–18
clearing the boot flags, 4–17
preparing for installation, 4–1
DEC 10000 processor
booting from CD-ROM, 4–18
booting from the network, 4–17
clearing the boot flags, 4–17
DEC C++ Run Time Libraries
installing, C–5
DEC Fortran
installing, C–8
DECLadebug debugger
installing, C–4
default disk partition size, 3–1
dependencies
between software subsets, 5–17
device name
determining, 2–4
device special file names
changed during update install, 2–20
device special files
in standalone environment, 7–5

devices
accessing in standalone environment, 7–5
directory
/isl, 7–4
/usr, 3–9
/var/adm, 3–7
/var/adm/ris, 3–7
disk label
error reading, 5–2
on existing system disk, 5–2
disklabel command
using, 3–2
using in standalone environment, 7–6
using to change disk partition size, 7–8
disks
allocating space for user files, 3–10
changing disk partition size, 7–8
choosing nonstandard partitions, 5–7
configuration worksheet, 3–3
existing partition layout, 3–2
partition layout, 3–11
partition sizes for DSA drives, D–1
partition sizes for SCSI drives, D–6
planning layout, 3–2
setting quotas, 3–10
size restrictions, 5–4
space requirements for, 3–1
supported, 3–2
unsupported as system disk, 5–4
used on ULTRIX systems, 5–2
displaying
online documentation, 6–20
DMS
See also dataless management
DMS server
allocating separate var area for, 5–13
DMS server (cont.)
space requirements for, 3–8
doconfig command, 6–30
documentation
Bookreader application, 6–20
displaying online, 6–20
how to access online, 6–14
DSA disk interface
partition tables, D–1
dual SCSI TURBOchannel option card (PMAZB, PMAZC)
booting the system from the, 4–12
dumps
full or partial, 3–5

E

editing
/etc/sysconfigtab file, 6–30
the configuration file, 6–10
EISA configuration utility
running for DEC 2000, 4–3
running for DEC 2100, 4–6
enabling realtime preemption, 6–30
entering
a password, 6–4
a system name, 6–3
a time zone, 6–5
system date and time, 6–6
error logger file
space requirements for, 3–7
error messages, E–1
error reading disk label, 5–2
error starting named
during update installation, 2–8
/etc/disktab file, 3–11

/etc/sysconfigtab file, 6–30
existing disk partition layout, 3–2

F

Factory Installed Software
problems during setup, 1–3
FDDI network interface, 4–13
FFM, 6–9
File on File File System, 6–9
file system
checking space during installation, 5–20
choosing, 5–9
mounting in standalone environment, 7–5
overhead, 3–1
restoring in standalone environemnt, 7–6
worksheet, 3–12t
file system type
AdvFS, 5–10, 5–14, 5–6
choosing for root, 5–6
choosing for /usr, 5–10
choosing for var, 5–14
UFS, 5–10, 5–14, 5–6
files
affected by update installation, 2–1
created by users, 3–10
left on system after installation, 5–22
FIS
See also Factory Installed Software
Fortran
installing, C–8
French software subsets, C–14
fstab file, 2–8
full dumps
space for, 3–5

G

German software subsets, C–13
GNU Sources
installing
GNU awk Source, C–9
GNU Emacs Source, C–9
GNU Revision Control System Source, C–10
Greek software subsets, C–14
groups
adding to the system, 6–28

H

hardware
installation requirements, 1–2
Hebrew software subsets, C–15
host names
registering, 2–5
Hungarian software subsets, C–15

I

increasing
number of allowable users, 1–10
init file in /tmp directory, 5–22
install update
See also update installation
installation
See advanced installation
See basic installation
choosing file system type during, 5–10, 5–14, 5–6
choosing type to perform, 5–1
files left on system, 5–22
full, 5–1
log files, 5–22

installation (cont.)
planning disk space, 3–1
verification, 6–29
installation types, 1–4
installing
additional applications, C–1
installing subsets, 8–1
international software subsets
Chinese, C–19
Czech, C–13
French, C–14
German, C–13
Greek, C–14
Hebrew, C–15
Hungarian, C–15
Italian, C–15
Japanese, C–16
Korean, C–17
Polish, C–17
Russian, C–17
Slovak, C–18
Spanish, C–14
Swedish, C–18
Thai, C–18
Turkish, C–19
worldwide, C–12
international support, C–10
internationalization, C–10
Internet name and address
setting up for servers, 2–5
/isl directory, 7–4
Italian software subsets, C–15

J

Japanese software subsets, C–16

K

kernel
booting alternate, 4–2
build fails during update installation, 2–19
building, 6–7
debugger, 6–8
enabling realtime preemption, 6–30
kernel breakpoing debugger, 6–8
kernel options
Advanced File System, 6–8
Audit Subsystem, 6–9
Data Link Bridge, 6–8
File on File File System (FFM), 6–9
ISO 9660 Compact Disc File System (CDFS), 6–9
Kernel Breakpoint Debugger, 6–8
Local Area Transport Support, 6–9
Logical Volume Manager, 6–8
Packetfilter Driver, 6–8
STREAMS Packet Module, 6–8
System V Devices, 6–8
table of, 6–7
X/Open Transport Interface (XTISO), 6–8
Korean software subsets, C–17

L

LAT, 6–9
layered product installation, 8–3
layered products
during update installation, 2–1
installing subsets after the installation, 8–3

layout
of existing partitions, 3–2
license information, 1–9
License Management Facility
See also LMF
how to use, 6–17
LMF, 6–18
how to use, 6–17
loading OSF-BASE PAK, 1–9
loading OSF-USR PAK, 1–10
lmfsetup program, 6–18
loading
license for operating system, 1–9
license PAKS, 6–13
local area network
providing support for, 6–9
local area transport support, 6–9
log file
syslog, 3–7
log files
location of, 5–22
logging in to the system, 6–11
logging system activity, 3–7
Logical Storage Manager
See also LSM
Logical Volume Manager
See also LVM
logins
adding to the system, 6–27
lpd daemon, 6–29
lprsetup program, 6–29
LSM
during update installation, 2–6
kernel option, 6–9
setting up, 6–30
starting before install update, 2–7, 2–9
LSM (cont.)
unreferenced file messages during reboot, 2–17
lsmbstartup command, 2–7, 2–9
LVM
kernel option, 6–8

M

mail
setting up on your system, 6–29
MAKEDEV command, 7–5
mandatory subsets, B–1
for the advanced installation, 5–17
for the basic installation, 5–15
space allocation for, 3–10
manuals
viewing online, 6–20
merge files, 2–2
merging customizations, 2–2, 2–21
modifying
resolution of hosts, 2–6
mounting
CD-ROM via CDFS, 6–9
CD-ROM via entry in fstab file, 2–8
file systems in standalone environment, 7–5
multiprocessor system
enabling realtime preemption, 6–30

N

named not found
during update installation, 2–8
names
adding users to the system, 6–27
naming your system
restrictions, 6–3

netsetup command, 2–5
network
booting over the, 4–1
checking status of, 2–5
network interface
data link bridge, 6–8
network setup, 6–26
networking
setting up your system, 6–27
.new.. files, 2–1, 5–22
nonstandard disk partitions, 5–7

O

obsolete system files, 2–2
online documentation
displaying, 6–20
how to access, 6–14
operating system
loading license to use, 1–9
optional subsets, B–4
for the advanced installation, 5–17
OSF-BASE PAK, 1–9
OSF-USR PAK, 1–10
OSFINET subset
required for update installation, 2–8

P

packetfilter driver, 6–8
packets
sending and receiving, 6–8
PAK
availability license requirements, 6–13
information about loading, 6–13
installing, 6–17
registering OSF-BASE, 1–9
PAK (cont.)
registering the Base System license, 6–17
partial dumps
space for, 3–5
partition
default for swap space, 3–4
determining size of, 3–1
displaying for ULTRIX disks, 7–11
existing layout, 3–2
for crash dump, 3–5
for the swap space, 5–9
for the /usr file system, 5–9
for /usr, 3–9
minimum size for root, 3–11
modifying root, 3–11
modifying swap, 3–11
nonstandard, 5–7
not large enough for system disk, 5–4
overhead, 3–1
selecting the default table, 5–7
selecting the existing table, 5–7
partition sizes, D–1
password
entering, 6–4
PMAZB option card
See dual SCSI TURBOchannel option card
PMAZC option card
See dual SCSI TURBOchannel option card
Polish software subsets, C–17
POLYCENTER Advanced File System
See also AdvFS
postinstallation tasks
after update install, 2–20
preserving
customized files during update installation, 2–1

Prestoserve option, 4–17, 4–9
printer setup, 6–26, 6–29
printers
  setting up on your system, 6–27
problems removing CD-ROM, 5–21
processors
  booting instructions for, 4–2
Product Authorization Key
  See also PAK
protected files
  for update installations, 2–2
protected system files, 2–1
.proto.. files, 2–1, 5–22
prototype files, 2–1

Q

quotas
  setting, 3–10

R

read this first
  setup message, 6–12
reading
  documentation online, 6–20
realtime kernel, 6–30
rebooting the system, 5–8
registering
  host names, 2–5
Remote Installation Service
  See also RIS
removing
  CD-ROM from drive, 5–21
requirements
  between software subsets, 5–17
restore
  boot block, 7–2
  damaged root file system, 7–6
  file systems in standalone environement, 7–6
  root file system, 7–2
restrictions
  for superuser password, 6–4
  for system name, 6–3
RIS
  booting over the network, 4–1
  installation, 1–4
  space requirements for, 3–7
root file system
  choosing file system type for, 5–6
  minimum partition size, 3–11
  restoring, 7–2
  restoring damaged, 7–6
root partition
  selecting disk for, 5–2
root password
  setting during system configuration, 6–3
Russian software subsets, C–17

S

SAS environment, 7–1
saving
  information on system disk, 5–3
SCSI disk interface
  partition tables, D–6
SCSI TURBOchannel Option, 4–12
security
  audit subsystem, 6–9
  setting up C2, 6–30
server
  allocating var file system for DMS, 5–13

setld command
displaying subset inventory, 8–2
installing subsets after the installation, 8–3
options to the, 8–2
uses of, 8–1
using with CD-ROM, 8–4
setting up
C2 security on your system, 6–30
LSM on the system, 6–30
mail on your system, 6–29
networking, 6–27
printers, 6–27
printers on your system, 6–29
users on the system, 6–27
setting up the system, 6–1, 6–16
setting up your system, 6–26
setup menu, 6–16, 6–26
setup message
at first-time log in, 6–11
sign on to the system, 6–11
simultaneous users
increasing allowable number of, 1–10
single-user mode, 7–2
size
minimum for root, 3–11
of crash dump partition, 3–5
of disk partitions, 3–1
of system disk, 3–11
of /usr, 3–9
of var area, 3–6
Slovak software subsets, C–18
software distribution kit, 1–3
software license, 1–9
software subsets
See also subsets
sort library
installing, C–11
space
for file system, 5–20
space requirements
DMS server, 3–8
Spanish software subsets, C–14
standalone environment
accessing devices, 7–5
capabilities, 7–4
changing disk partitions, 7–8
command and utilities available in, 7–4
defined, 7–1
in Bourne shell, 1–9
mounting file systems, 7–5
restoring file systems, 7–6
using ULTRIX partitions, 7–11
via SYSTEM MANAGEMENT option, 1–9
starting
LSM before install update, 2–7, 2–9
subset
additional applications, C–1
descriptions, B–1
for applications, B–5
mandatory, B–1
subsets
dependencies, 5–17
displaying inventory, 8–2
for System V compatibility, 5–17
for the advanced installation, 5–17
for the basic installation, 5–15
international, C–10
kernel build environment, B–7
language support, B–17
LSM part of base operating system, 2–6
mail applications, B–8

subsets (cont.)
network-server/communications, B–9
printing environment, B–10
reference pages, B–10
software development, B–11
space allocation for, 3–9
supplemental documentation, B–13
system administration, B–13
text processing, B–15
update installation of LSM, 2–6
windowing environment, B–15
windows applications, B–16
superuser password
setting during system configuration, 6–3
svcsetup command, 2–6
SVID2 habitat, 6–29
SVR4, 6–8
swap space, 5–12
default location, 5–9
planning, 3–4
Swedish software subsets, C–18
syslog file
space requirements for, 3–7
system
configuring for general use, 6–16
enabling realtime preemption, 6–30
logging in, 6–11
system accounting
space for, 3–7
system activity
logging, 3–7
system crash, 3–5
system date and time
specifying, 6–6
system disk
choosing, 5–5
system disk (cont.)
default layout, 3–11
defined, 1–2
existing disk label, 5–2
minimum size for root, 3–11
planning layout, 3–2
preserving information on, 5–3
restrictions, 3–2
selecting, 5–2
supported, 3–2
table, 5–5
system files
obsolete, 2–2
protected, 2–1
unprotected, 2–2
system information
entering, 6–3
SYSTEM MANAGEMENT option, 1–9
invoking standalone environment, 7–1
system name
entering, 6–3
setting during system configuration, 6–3
system reboot, 5–8
system setup, 6–26
System V compatibility, 5–17
System V devices, 6–8

T

Thai software subsets, C–18
time
entering for the system, 6–6
setting during system configuration, 6–3
time zone
selecting, 6–5
specifying during system configuration, 6–3
table of acronyms, 6–5

time zone (cont.)
time-stamping, 6–7
timezone command
running the SVID2 Habitat, 6–29
/tmp/init file, 5–22
troubleshooting, E–1
Turkish software subsets, C–19

U

UFS, 5–14, 5–6
defined, 5–6
ULTRIX systems
disks used on, 5–2
displaying partitions in standalone environment, 7–11
using ULTRIX disk as system disk, 5–6
uniprocessor system
enabling realtime preemption, 6–30
UNIX File System
See also UFS
unmounting CD-ROM, 5–21
unprotected system files, 2–2
unreferenced files
messages during LSM update installation, 2–17
update administration utility, 2–22
update installation
defined, 1–5
device special file names changed during, 2–20
dialog, 2–9
files affected by, 2–1
kernel build fails, 2–19
log files, I–1
media options, 2–7
merging customizations, 2–2
update installation (cont.)
named file, 2–8
obsolete files, 2–2
post-installation work, 2–20
preparation, 2–4
starting LSM before, 2–7, 2–9
unreferenced file messages during reboot, 2–17
updated files, J–1
user files
setting quotas on, 3–10
space requirements for, 3–10
users
adding to the system, 6–27
how to add, 6–16
loading license for more, 1–10
using
the setup scripts, 6–26
/usr file system
allocating, 3–9
allocating var area under, 5–13
choosing file system type for, 5–10
default location, 5–9
defined, 3–9
restoring, 7–8
space requirements for, 3–10
worksheet to calculate space for, 3–11

V

var area
allocating for DMS server, 5–13
choosing file system type for, 5–14
planning, 3–6
restoring, 7–8
worksheet, 3–8

/var/adm directory
system accounting, 3–7
Verifier/Exerciser Tool, 6–29
VET, 6–29
viewing
online documentation, 6–20

W

welcome message
at first-time log in, 6–11
worksheets
disk configuration, 3–3
file system, 3–12t
/usr, 3–11
var, 3–8
worldwide software subsets, C–12

X

X/Open Transport Interface, 6–8
XTISO, 6–8

How to Order Additional Documentation

Technical Support

If you need help deciding which documentation best meets your needs, call 800-DIGITAL (800-344-4825) before placing your electronic, telephone, or direct mail order.

Electronic Orders

To place an order at the Electronic Store, dial 800-234-1998 using a 1200- or 2400-bps modem from anywhere in the USA, Canada, or Puerto Rico. If you need assistance using the Electronic Store, call 800-DIGITAL (800-344-4825).

Telephone and Direct Mail Orders

Your Location	Call	Contact
Continental USA, Alaska, or Hawaii	800-DIGITAL	Digital Equipment Corporation P.O. Box CS2008 Nashua, New Hampshire 03061
Puerto Rico	809-754-7575	Local Digital subsidiary
Canada	800-267-6215	Digital Equipment of Canada Attn: DECdirect Operations KAO2/2 P.O. Box 13000 100 Herzberg Road Kanata, Ontario, Canada K2K 2A6
International	————	Local Digital subsidiary or approved distributor
Internal[a]	————	SSB Order Processing – NQO/V19 *or* U. S. Software Supply Business Digital Equipment Corporation 10 Cotton Road Nashua, NH 03063-1260

[a] For internal orders, you must submit an Internal Software Order Form (EN-01740-07).

Reader's Comments

DEC OSF/1
Installation Guide
AA-PS2DD-TE

Digital welcomes your comments and suggestions on this manual. Your input will help us to write documentation that meets your needs. Please send your suggestions using one of the following methods:

- This postage-paid form
- Internet electronic mail: `readers_comment@zk3.dec.com`
- Fax: (603) 881-0120, Attn: UEG Publications, ZKO3-3/Y32

If you are not using this form, please be sure you include the name of the document, the page number, and the product name and version.

Please rate this manual:	Excellent	Good	Fair	Poor
Accuracy (software works as manual says)	☐	☐	☐	☐
Completeness (enough information)	☐	☐	☐	☐
Clarity (easy to understand)	☐	☐	☐	☐
Organization (structure of subject matter)	☐	☐	☐	☐
Figures (useful)	☐	☐	☐	☐
Examples (useful)	☐	☐	☐	☐
Index (ability to find topic)	☐	☐	☐	☐
Usability (ability to access information quickly)	☐	☐	☐	☐

Please list errors you have found in this manual:

Page	Description
_____	_____
_____	_____
_____	_____
_____	_____
_____	_____

Additional comments or suggestions to improve this manual:

_____

_____

_____

_____

_____

What version of the software described by this manual are you using? _____

Name/Title _____ Dept. _____

Company _____ Date _____

Mailing Address _____

_____ Email _____ Phone _____

Do Not Tear - Fold Here and Tape

digital™

No Postage
Necessary
if Mailed in the
United States

BUSINESS REPLY MAIL
FIRST CLASS PERMIT NO.33 MAYNARD MASS.

POSTAGE WILL BE PAID BY ADDRESSEE

DIGITAL EQUIPMENT CORPORATION
UEG PUBLICATIONS MANAGER
ZKO3-3/Y32
110 SPIT BROOK ROAD
NASHUA, NH 03062-9987

Do Not Tear - Fold Here

Cut
Along
Dotted
Line

digital

Printed in the U.S.A.