THIS SCHEMATIC IS FURNISHED ONLY FOR TEST AND MAINTENANCE PURPOSES. THE CIRCUITS ARE PROPRIETARY IN NATURE AND SHOULD BE TREATED ACCORDINGLY
COPYRIGHT 1970 BY DIGITAL EQUIPMENT CORPORATION

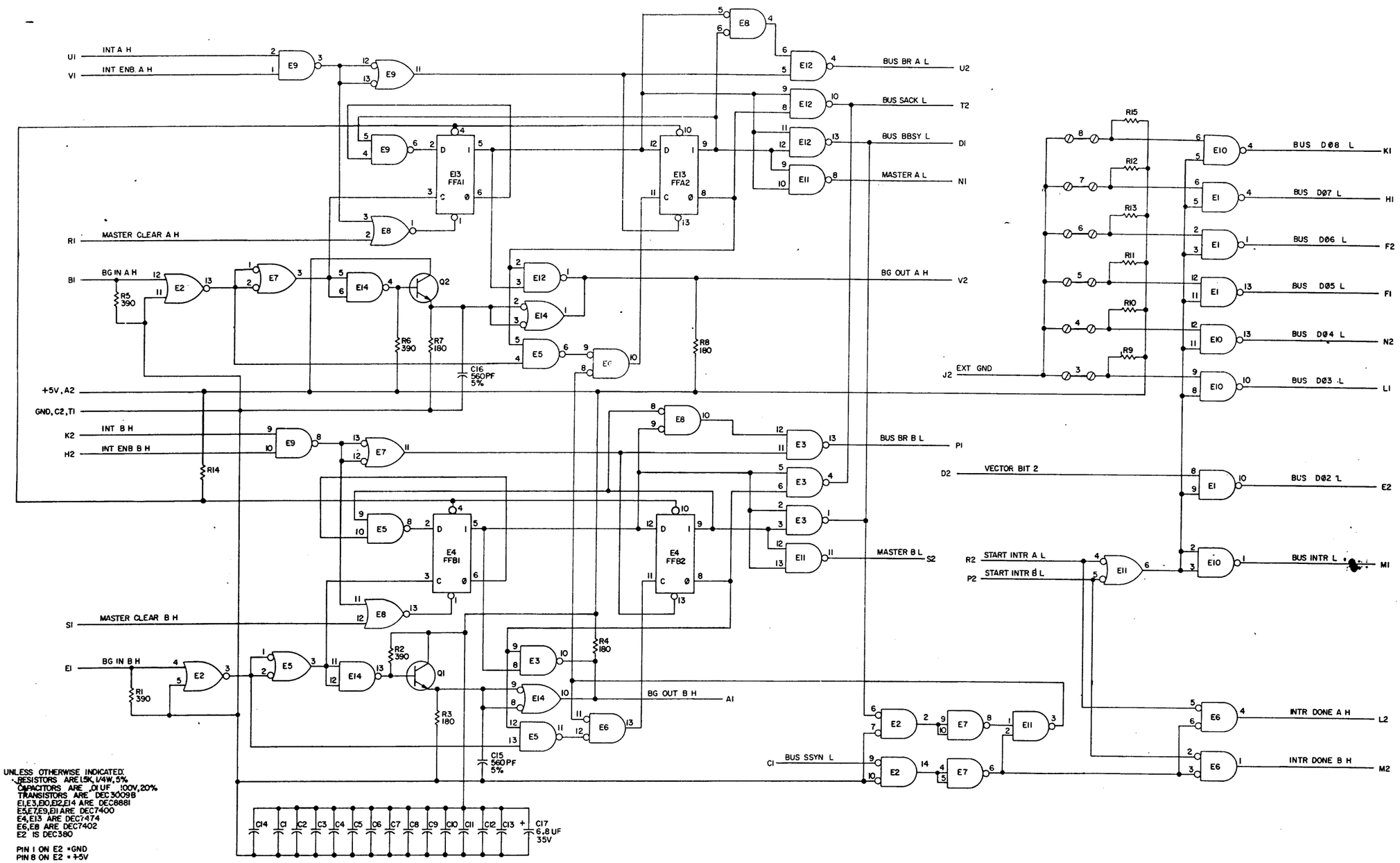

UNLESS OTHERWISE INDICATED
RESISTORS ARE 1.5K, 1/4W, 5%
CAPACITORS ARE .01 UF 100V, 20%
TRANSISTORS ARE DEC 3009B
E1, E3, E10, E12, E14 ARE DEC8881
E5, E7, E9, E11 ARE DEC7400
E4, E13 ARE DEC7474
E6, E8 ARE DEC7402
E2 IS DEC380

PIN 1 ON E2 = GND
PIN 8 ON E2 = +5V
PIN 7 ON E1, E3 - E14 = GND
PIN 14 ON E1, E3 - E14 = +5V
⊘ = SPLIT LUGS
—— = JUMPERS

REVISIONS			
CHR	CHG NO	REV	B
FLD	00005		

DRN S. COOPER DATE 12/31/70
CHK'D DATE 4 Mar 71
DATE
PROD. DATE

TRANSISTOR & DIODE CONVERSION CHART

DEC	EIA	DEC	EIA
DEC30098	2N30098		

digital EQUIPMENT CORPORATION MAYNARD, MASSACHUSETTS

TITLE INTERRUPT CONTROL M7820

SIZE	CODE	NUMBER	REV
D	CS	M7820-0-1	B

PRINTED CIRCUIT REV. B C

DIST. 3 2 4 1 5 6 7 8 9

(4)

PINK

SIZE D CODE CS NUMBER M7820-0-1 REV B