49769000

CONTROL DATA CORPORATION

STREAMING TAPE UNIT 92181 - VERTICAL MOUNT

THEORY OF OPERATION
DIAGRAMS
MAINTENANCE
PARTS IDENTIFICATION

HARDWARE MAINTENANCE MANUAL

REVISION RECORD

REVISION	DESCRIPTION
A (09-30-84) Series Code 15	Released. This manual along with the Hardware Reference/Maintenance Manual Pub. No. 49768900 supersedes Field Service Manual 49761800, Technical Reference Manual 49761500 and Parts Identification Manual 49762000 for Vertical Mounted STU's.
B (03-30-85) Series Code 16	This revision incorporates editorial changes affecting pages: ii, iii/iv, v, vi, vii, viii, ix, x, xi, xii, xiii, 4-5, 4-6, 4-8, 4-9, 4-13, 4-16, 4-17, 4-18, 6-63, 6-155 thru 6-159, 6-189, 6-190, and technical changes affecting pages: 4-66, 6-63, and 6-185. ECO 51055 changes page 6-156 and adds pages 6-197 thru 6-199/6-200. ECO 51615 has no effect on this manual.
C (08-28-85) Series Code 17 , 18	This revision incorporates ECO 51629 and technical changes affecting pages: 4-6, 4-17, 4-41, 4-42, 4-44, 5-58, 5-84, and 7-1 thru 7-28,
PUB. NO. 49769000	Revision letters I, O, Q, and X are not used.

© 1984, 85
By Control Data Corporation
Printed in the United States
of America

Address comments concerning this manual to:

Computer Peripherals, Inc.
Technical Publications Dept.
2621 Van Buren Avenue
Norristown, PA 19403

or use the comment sheet in the back of this manual.

PREFACE

The purpose of this manual is to furnish to the customer engineer information needed to maintain the 92181 STU. It is assumed that the customer engineer has had training and/or experience on the 92181 or similar tape units. Under no circumstances should maintenance be attempted by any one without the prerequisite skills and experience.

Hardware reference/maintenance information is separated into two publications on a task-oriented basis. This manual, publication number 49769000 presents technical maintenance information in the following sections:

4 - THEORY OF OPERATION
5 - DIAGRAMS
6 - MAINTENANCE
7 - PARTS IDENTIFICATION

The other manual, publication number 49768900, presents routine operation, maintenance, and installation instructions in the following sections:

1 - GENERAL INFORMATION
2 - OPERATION
3 - INSTALLATION AND CHECKOUT

The manuals identified above are available through the nearest Control Data Sales Office.

WARNING

This equipment generates, uses, and can radiate radio frequency energy, and if not installed and used in accordance with the instructions manual, may cause interference to radio communications. It has been tested and found to comply with the limits for a Class A peripheral computing device pursuant to Subpart J of Part 15 of the FCC Rules, which are designed to provide reasonable protection against such interference when operated in a commercial environment. Operation of this equipment in a residential area is likely to cause interference, in which case, the user, at his own expense, will be required to take whatever measures may be required to correct the interference.

TABLE OF CONTENTS

	PAGE
Section 4 - THEORY OF OPERATION	
GENERAL DESCRIPTION	4-1
PHYSICAL DESCRIPTION	4-1
POWER SUPPLY	4-3
TENSION/SPEED CONTROL	4-3
MAGNETIC HEAD	4-3
FORMAT CONTROL	4-4
INTERFACE	4-4
Streaming Mode Operations	4-4
Gap Length Controls	4-4
Sense Transfer	4-4
Interface Loopback	4-4
POWER SUPPLY	4-5
GENERAL DESCRIPTION	4-5
PHYSICAL DESCRIPTION	4-5
Voltage Select PWA	4-6
Power Supply Control PWA	4-6
Power Supply Main PWA	4-6
POWER SUPPLY FUNCTIONAL DESCRIPTION	4-8
GENERAL	4-8
INPUT POWER SELECTION	4-8
STANDBY VOLTAGE GENERATION	4-9
POWER-ON SEQUENCE	4-11
SWITCHING CONVERTER	4-13
DC VOLTAGES	4-14
LOW VOLTAGE/OVER-VOLTAGE DETECTION	4-15
POWER SUPPLY SHUTDOWN	4-15
PNEUMATIC SYSTEM FUNCTIONAL DESCRIPTION	4-16
PNEUMATIC SYSTEM OPERATIONAL DESCRIPTION	4-17

TABLE OF CONTENTS (Cont'd)

	PAGE
READ/WRITE/SERVO PWA FUNCTIONAL DESCRIPTION	4-19
INTRODUCTION	4-19
MICROPROCESSOR	4-19
TENSION SERVO	4-23
VELOCITY SERVO	4-24
WRITE CIRCUITS	4-26
Write Drivers	4-26
Degauss	4-26
Erase	4-27
READ CIRCUITS	4-28
ELECTRONIC GAIN CONTROL (EGC)	4-31
FORMATTER/CONTROL PWA FUNCTIONAL DESCRIPTION	4-33
MICROPROCESSOR	4-33
WRITE CIRCUITS	4-38
READ CIRCUITS	4-39
POWER DRIVER PWA FUNCTIONAL DESCRIPTION	4-41
HEAD ASSEMBLY OPERATION	4-45
RECORDING TECHNIQUES AND FORMATS	4-45
Tape Composition	4-45
Phase Modulation - Technique and Format	4-46
Phase Modulation - Character Configuration	4-47
STU/ADAPTER INTERFACE	4-49
ELECTRICAL INTERFACE	4-49
MECHANICAL INTERFACE	4-49
Connector Requirements	4-49
I/O Cabling Requirement	4-49
CONNECTOR PIN CONFIGURATION	4-50
INTERFACE REQUIREMENTS	4-52
Minimum System Configuration	4-53
Maximum System Configuration	4-53

	PAGE
INTERFACE DESCRIPTION	4-54
Mode of Operation	4-54
Command Set	4-54
STATUS AND SENSE INFORMATION	4-57
Status Information	4-57
Sense Data	4-60
SIGNAL DESCRIPTION	4-65
Lines To The STU	4-65
Lines From The STU	4-68
SYSTEM AND TIMING CONSIDERATION	4-70
MOTION CHARACTERISTICS	4-70
Start/Stop Mode	4-71
Streaming Mode	4-76
25 ips Mode Control	4-81
Optional Adaptive Velocity Control (AVC)	4-82
COMMAND CLASSIFICATION	4-83
Interface States	4-83

Section 5 - DIAGRAMS

GENERAL	5-1

TABLE OF CONTENTS (Cont'd)

	PAGE
Section 6 - MAINTENANCE	
GENERAL DESCRIPTION	6-1
TROUBLE ANALYSIS	6-1
REMOVAL/REPLACEMENT PROCEDURES	6-2
- TROUBLE ANALYSIS	6-3
GENERAL DESCRIPTION	6-3
CUSTOMER ENGINEER PROCEDURES	6-4
PRE-SITE PROCEDURES	6-4
Corrective Action Matrices	6-4
ON-SITE PROCEDURES	6-14
Diagnostic Tests	6-16
Operator Diagnostics	6-16
Diagnostic Test Procedure	6-17
Customer Engineer Diagnostics	6-18
Customer Engineer Special Procedure	6-20
Sub-Fault Codes	6-20
STRUCTURED ANALYSIS METHOD (SAM) TABLES	6-21
SUB-FAULT CODE INTERPRETATION	6-22
- TEST DESCRIPTIONS	6-97

TABLE OF CONTENTS (Cont'd)

	PAGE
GENERAL INFORMATION	6-97
INITIATING A DIAGNOSTIC TEST AND SELECTING OPTIONS	6-98
LIST OF DIAGNOSTIC TESTS	6-99
- REMOVAL/REPLACEMENT (R/R) PROCEDURES	6-155
GENERAL	6-155
TAPE CLEANER ASSEMBLY R/R	6-160
DOOR INTERLOCK SWITCH R/R	6-161
FILE PROTECT SENSOR R/R	6-162
EOT/BOT SENSOR ASSEMBLY R/R	6-163
HUB ASSEMBLY TAKE-UP REEL R/R	6-165
MOTOR ASSEMBLY TAKE-UP REEL R/R	6-166
HUB ASSEMBLY - SUPPLY REEL R/R	6-167
MOTOR ASSEMBLY - SUPPLY REEL R/R	6-169
TACH AND SENSOR - SUPPLY MOTOR R/R	6-172
AIR BEARING TRANSDUCER R/R	6-173
AIR BEARING SPRING GUIDE R/R	6-175
PNEUMATIC PUMP ASSEMBLY R/R	6-177
PRESSURE REGULATOR AND FILTER ASSEMBLY R/R	6-178
MAGNETIC HEAD ASSEMBLY R/R	6-181
OPERATOR PANEL ASSEMBLY R/R	6-185
COOLING FAN ASSEMBLY R/R	6-186
POWER SUPPLY R/R	6-187
READ/WRITE/SERVO PWA R/R	6-189
FORMATTER/CONTROL PWA R/R	6-191
POWER AMPLIFIER PWA R/R	6-192
CAPACITOR ASSEMBLY R/R (Units with Acoustic Shield Assembly)	6-193
ACOUSTIC SHIELD ASSEMBLY R/R	6-195
Drive Cover R/R	6-197
Capacitor Assembly R/R (Units with Drive Cover)	6-198

Section 7 - PARTS IDENTIFICATION

PARTS DATA	7-1

LIST OF FIGURES

NO.	TITLE	PAGE
4-1	Functional Block Diagram	4-2
4-2	Major Power Supply Components	4-5
4-3	Power Supply Block Diagram	4-7
4-4	Voltage Select PWA	4-8
4-5	Cooling Fan Wiring	4-9
4-6	Stand-By Voltage Generation	4-10
4-7	Power-On Sequence Flowchart	4-12
4-8	High Voltage Generation	4-13
4-9	Switching Converter Circuit	4-14
4-10A	Vacuum and Pressure Distribution	4-16
4-10B	Vacuum and Pressure Distribution	4-17
4-11A	Pneumatic Pump Wiring, 120 VAC Configuraion	4-18
4-11B	Pneumatic Pump Wiring, 220 VAC Configuraion	4-18
4-12	Read/Write/Servo PWA Block Diagram	4-20
4-13	Tension Servo - Simplified	4-23
4-14	Velocity Servo - Simplified	4-25
4-15	Write/Erase Block Diagram	4-27
4-16	Read Circuits Block Diagram	4-29
4-17	Read Chain Waveforms	4-30
4-18	Electronic Gain Control Waveforms	4-32
4-19	Formatter/Control Block Diagram	4-34
4-20	PIA Communication Protocol	4-35
4-21	Processor Read Operation	4-37
4-22	Processor Write Operation	4-37
4-23	Formatter Write Operation	4-38
4-24	PE Recovery - Data Cell Timing	4-40
4-25	PE Read Recovery Timing	4-40
4-26	Power Driver Block Diagram	4-41
4-27	Power Driver Waveforms	4-42
4-28	H-Bridge Switching	4-43
4-29	Switched +5 Volts	4-44
4-30	PE Modulation Recording	4-46
4-31	Phase Encoded Tape Format	4-48
4-32	Interface Configuration	4-49
4-33	Minimum System Configuration	4-53
4-34	Maximum System Configuration	4-53
4-35	Start/Stop Tape Motion Control	4-75
4-36	Streaming Mode Velocity Diagram	4-77
4-37	Case 1 - Tape Motion Control	4-78
4-38	Case 2 - Tape Motion Control	4-78
4-39	Case 2 - Tape Motion Control (Cont'd)	4-79
4-40	Case 3 - Tape Motion Control	4-80
4-41	Case 3 - Tape Motion Control (Cont'd)	4-81

LIST OF FIGURES (Cont'd)

NO.	TITLE	PAGE
4-42	Start/Stop - New Command Received During Reinstruct	4-84
4-43	Start/Stop - No New Command Received	4-85
4-44	Streaming - No New Command Received	4-85
4-45	Streaming - New Command Received During Repositioning	4-86
4-46	Streaming - New Command Received During Reinstruct	4-86
6-1	Flowchart of On-Site Trouble Analysis	6-15
6-2	Example of Structured Analysis Method (SAM)	6-21
6-3	Sub-Fault Code Interpretation - Example 1	6-22
6-4	Sub-Fault Code Interpretation - Example 2	6-23
6-5	STU Assembly Locator	6-157
6-6	Tape Cleaner	6-160
6-7	Door Interlock Switch (Rear View)	6-161
6-8	File Protect Sensor Alignment	6-162
6-9	EOT/BOT Sensor	6-163
6-10	Take-Up Reel	6-165
6-11	Supply Reel Hub Assembly	6-167
6-12	Supply Reel Assembly	6-169
6-13	Take-Up Reel Motor Assembly	6-170
6-14	Tach/Sensor Assembly/Adjustments	6-172
6-15	Air Bearing Transducers	6-173
6-16	Air Bearing Spring Guide	6-175
6-17	Pneumatic Pump	6-177
6-18	Regulator & Filter Removal (S/N 838 & Below)	6-178
6-18A	Regulator & Filter Removal (S/N 839 & Above)	6-179
6-19	Magnetic Head Assembly	6-182
6-20	Magnetic Head Connectors	6-183
6-21	Read/Write/Servo PWA	6-184
6-22	Operator Panel Assembly	6-185
6-23	Cooling Fan Assembly	6-186
6-24	Logic Cage Assembly	6-190
6-25	Capacitor Assembly (Units with Acoustic Shield Assembly)	6-193
6-26A	Acoustic Shield Assembly (Unmounted)	6-195
6-26B	Acoustic Shield Assembly (Mounted)	6-196
6-27	Drive Cover	6-197
6-28	Capacitor	6-198

LIST OF FIGURES (Cont'd)

NO.	TITLE	PAGE
7-1	Equipment Assembly - Front (S/N 838 & Below)	7-3
7-2	Equipment Assembly - Front (S/N 839 & Above)	7-8
7-3	Equipment Assembly - Rear (S/N 838 & Below)	7-14
7-4	Equipment Assembly - Rear (S/N 839 & Above)	7-20
7-5	Equipment Assembly - Rear	7-24
7-6	Equipment Assembly - Rear	7-26
7-7	Air Bearing Assembly - Upper	7-28
7-8	Air Bearing Assembly - Lower	7-29
7-9	Motor Assembly - Supply Reel	7-30
7-10	Motor Assembly - Take-Up Reel	7-32

LIST OF TABLES

NO.	TITLE	PAGE
4-1	Processor Read/Write Timing Constraints	4-33
4-2	STU Sense Byte Summary	4-64
4-3	STU Interface Commands	4-67
4-4	Motion Characteristics	4-72
4-5	Streaming Mode Motion Sequence Chart	4-77
5-1	Schematic Index	5-1
6-1	Referenced Maintenance Aids	6-2
6-2	Malfunction Matrix	6-5
6-3	Fault Code Matrix (Operator Test 01)	6-6
6-4	Test 02 Termination Codes Following Test 01 Fault Code 22	6-8
6-5	Test 02 Termination Codes Following Test 01 Fault Code 24	6-8
6-6	Test 02 Termination Codes Following Test 01 Fault Code 26	6-9
6-7	Test 02 Termination Codes Following Test 01 Fault Codes 30, 31, or 36	6-9
6-8	Test 03 Termination Codes Following Test 01 Fault Code 04 or 06	6-10
6-9	Test 03 Termination Codes Following Test 01 Fault Code 26 or 32	6-10
6-10	Test 03 Termination Codes Following Test 01 Fault Code 22	6-11
6-11	Test 03 Termination Codes Following Test 01 Fault Code 25	6-11
6-12	Test 03 Termination Codes Following Test 01 Fault Code 33 or 35	6-12
6-13	Test 03 Termination Codes Following Test 01 Fault Code 48	6-12
6-14	Test 03 Termination Codes Following Test 01 Fault Code 52	6-13
6-15	Test 03 Termination Codes Following Test 01 Fault Code 30 or 31	6-13
6-16	Test 03 Termination Codes Following Test 01 Fault Code 36	6-14
6-17	Removal/Replacement Index	6-155
7-1	PWA Complement	7-36 |

THEORY OF OPERATION 4

GENERAL DESCRIPTION

This section of the manual discusses the principles of operation of the Streaming Tape Unit (STU). Descriptions are provided for all functions of the STU on a major component basis. Major areas of discussion are as follows:

- o Power Generation and Distribution
- o Pneumatic System
- o Servo-Read/Write Board Functions
- o Formatter/Control Functions
- o Power Amplifier Operation
- o Head Operation/Recording
- o Interface and Timing Considerations

Text is supported by diagrams, flowcharts and timing charts, where required, to simplify understanding of the description. Diagrams contained herein are condensed and simplified and, in no way, should they be used for STU troubleshooting. Logic diagrams and schematics contained in the Field Service Manual take preference over any diagrams contained in the theory of operation. Refer to Figure 4-1 for a block diagram of the Streaming Tape Unit (STU).

A brief functional description of major areas of the STU is given in succeeding paragraphs. A more detailed circuit description is then discussed with accompanying block diagrams and flowcharts.

PHYSICAL DESCRIPTION

The STU is a manual load, reel-to-reel tape drive unit requiring no capstan drive, tension arms or vacuum columns. Tape is transported directly under electronic control, with no tape buffers required. Tension is sensed electronically by tension sensors built directly into the tape path. The five major equipment components or subsystems are Formatter/Control logic, Servo circuits, Read/Write Head assembly and circuits, Pneumatics/Cooling systems, and the Power Supply and Distribution circuitry. The following paragraphs give a brief description of the overall STU functions.

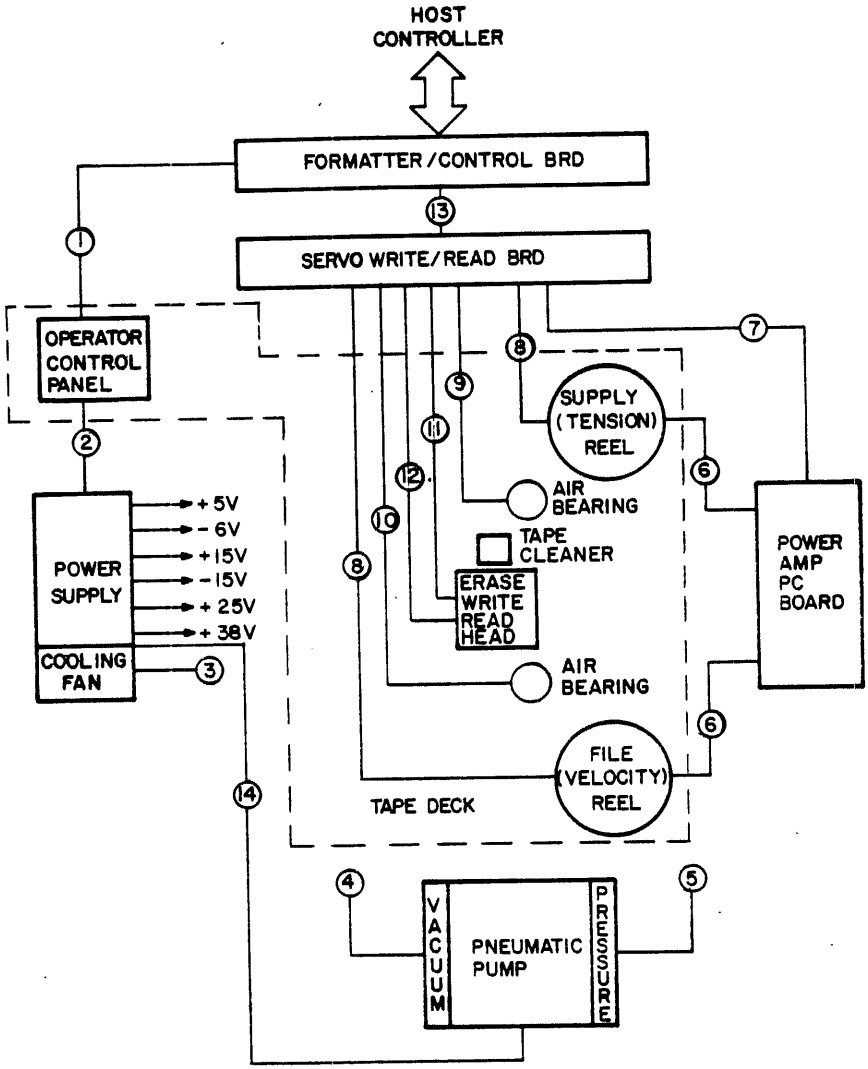

1. OPERATOR/DIAGNOSTIC COMMANDS
2. ON/OFF SWITCHES AND PANEL INDICATOR VOLTAGES
3. COOLING AIR TO ALL ASSEMBLIES
4. VACUUM SUPPLY TO TAPE CLEANER
5. PRESSURE TO AIR BEARINGS
6. DRIVE CURRENT TO REEL MOTORS
7. SPEED/TENSION CONTROL
8. TACH INFO TO SERVO CIRCUITS
9. BEARING TRANSDUCER TENSION INFO
10. BEARING TRANSDUCER TENSION INFO
11. WRITE DATA TO TAPE
12. READ DATA FROM TAPE
13. LOGIC CONTROL AND FORMATTING INFO
14. POWER TO PUMP MOTOR

Figure 4-1. FUNCTIONAL BLOCK DIAGRAM

POWER SUPPLY

The power supply is partially activated when the main circuit breaker is in the ON position. This allows the LOGIC OFF indicator on the control panel to illuminate, and also supplies the AC power to operate the cooling fan motor.

Pressing the LOGIC ON switch generates all the necessary DC voltages used throughout the STU logic circuits, as well as initiating a MASTER CLEAR pulse. This pulse is used to steer the control logic functions to a starting or known state prior to starting a Load operation.

TENSION/SPEED CONTROL

The Load function is initiated by the LOAD switch on the control panel. The pneumatic pump is activated at this time, causing air pressure to be gated to the upper and lower air bearings. Air pressure gated through holes in the bearings actually senses the tension of the tape through transducers physically located on the air bearings. The transducer output signals are applied to a tension servo circuit, whereby, the supply (file) reel is directed to drive so that a constant tension of approximately 8 ounces is maintained across the tape path at all times.

Tape speed is maintained through the use of a 1000 line tach and a 1 line tach located on the rear of the reel motors. Tach information is applied to an electronically controlled servo, whereby, a calculation is made of the linear velocity (inches per second) and the radius of the take-up reel. Because the radius of tape on the reel is always a known factor, then the linear velocity can be compensated for without the use of a capstan drive circuit.

MAGNETIC HEAD

The magnetic head fulfills the objective of the STU; ie., read from or write to the magnetic tape. This assembly consists of a sectionalized read/write head and an erase head. Selection of the read or write modes of operation is made by the host controller through the control logic circuits. Data is transferred from or to the host controller via data lines that are gated to the individual read heads by the read/write circuits. Read recovery circuits convert the readback data to a digital format compatible with the control and formatter logic. Write driver circuits convert the logic-compatible write data to current levels required to drive the write head coils.

FORMAT CONTROL

The STU performs all data formatting functions internal in the formatter logic circuits. Functions controlled by the transport include PE ID Burst, Preamble, Postamble, File Mark, and Skew Compensation.

INTERFACE

The STU interface is based upon the Industry Standard Interface for 1/2 inch tape products. Modifications to this standard interface are required to accommodate the STU. The modifications are in the form of expansion to accommodate streaming mode operations and increased functionality, as well as deletions of unused functions. More specifically, the following additional capability is provided:

Streaming Mode Operations

Speed Select Command and Status Lines are required for setting start/stop or streaming modes and identifying motion states.

Gap Length Controls

Establish normal (0.6 inch nominal) or long (1.2 inch nominal) Inter-block Gap (IBG). Optional gap lengths in the short and long gap are selectable via change to printed circuit board. The short gap is fixed at 0.6 inch or variable 0.6 to 0.9 inch. The long gap is fixed at 1.2 inches or variable 0.6 to 1.2 inches. The STU is shipped with the gaps selected in the fixed modes.

Sense Transfer

Allows for the transfer of sense information.

Interface Loopback

Allows for the looping of write-to-read lines on the STU Interface.

The deletions consist of removing the functions of density selection (NRZI/PE), Edit Command (not supported), and clip level threshold selection (performed automatically in the transport).

POWER SUPPLY

GENERAL DESCRIPTION

The power supply located at the top rear of the transport provides all power from a single AC appliance input. A circuit breaker or similar protective device rated at 15 amps is required at the customer power source.

The power supply accepts inputs of 120 VAC or 220-240 VAC power, with the only change in configuration being the positioning of the Voltage Select PWA. A functional description of this change is discussed in succeeding paragraphs. The major function of the power supply is to provide AC power to the cooling fan and pneumatic pump, generate DC voltages used throughout the transport, and provide shut-down capabilities in the event of abnormal voltage conditions.

PHYSICAL DESCRIPTION

Power supply components consist of the AC input receptacle, line filter, circuit breaker (mounted on the top front of tape deck), Voltage Select PWA, Main Power Supply PWA, and Power Supply Control PWA. A simplified block diagram of major power components is shown in Figure 4-2. A brief functional description of the three power supply PWA's is as follows:

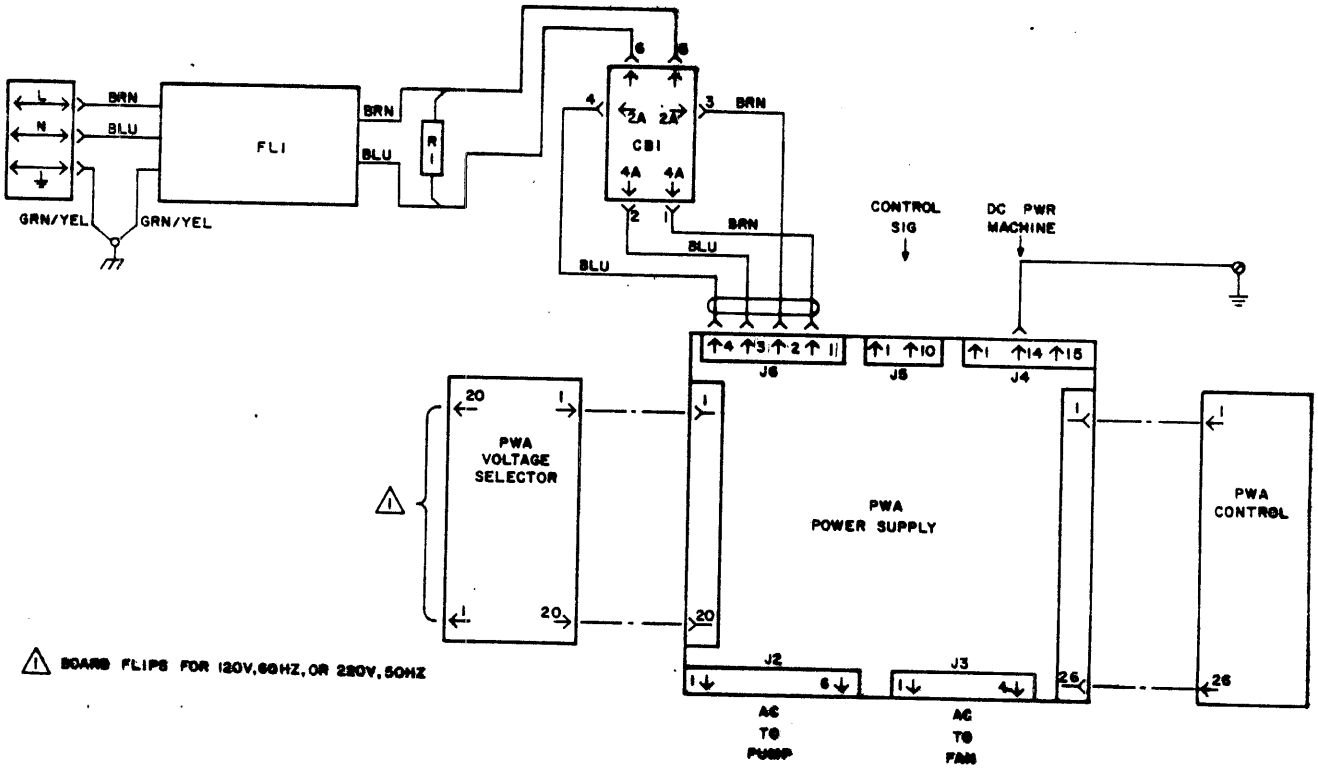

Figure 4-2. MAJOR POWER SUPPLY COMPONENTS

Voltage Select PWA

This PWA consists of two connectors labeled J1A and J1B and two fuses. One fuse is used in the input AC lines to a standby voltage supply, and the remaining fuse is used for protection of components in the board is such that the input transformer in a configuration compatible with either 120 VAC or 220-240 VAC. Connector J1A is inserted into the Main PWA if 120 VAC is provided; connector J1B is used for the 220-240 VAC requirement. Connector keys are provided on the board edge connectors to reduce the possibility of incorrect insertion. The Voltage Select PWA is mounted vertically into the Power Supply Main PWA at connector J6.

Power Supply Control PWA

The Control PWA consists of the low voltage and over-voltage detect circuits, LOGIC ON switch and LOGIC OFF switch input circuits, LOGIC ON/OFF control panel indicator circuits, master clear circuit and power-on latching circuit. Like the Voltage Select PWA, the Control PWA is mounted vertically into the Main PWA at connector J8.

Power Supply Main PWA

The Main PWA is responsible for the function of the power supply; i.e., generating DC voltages for all functions in the STU. A brief description of the circuits, comprising the Main PWA, is as follows:

- Standby Voltage Circuit - Standby voltages of +20, +15 and +5 volts are developed to provide a separate supply voltage for all other control circuits associated with the power supply. The standby voltages are used only within the power supply.

- Pulse Width Modulator - This circuit monitors the +5 volt output logic level and developes a pulse train to drive the half bridge switching converter. The pulse width modulator also provides the means by which abnormal conditions cause the shut-down of the output voltages.

- Half-Bridge Switching Converter - This circuit contains the pulse width modulator, totem-pole driver circuits, high voltage rectifier, and transformers coupling the converted primary energy to the regulated DC voltage output circuits.

- Regulated DC Voltages - The regulated DC voltages generated on the main PC board include +5V, -6V, $\pm$ 15V, +25V and +38V. The circuits consist of output transformers, full wave rectifiers, filtering networks and regulators.

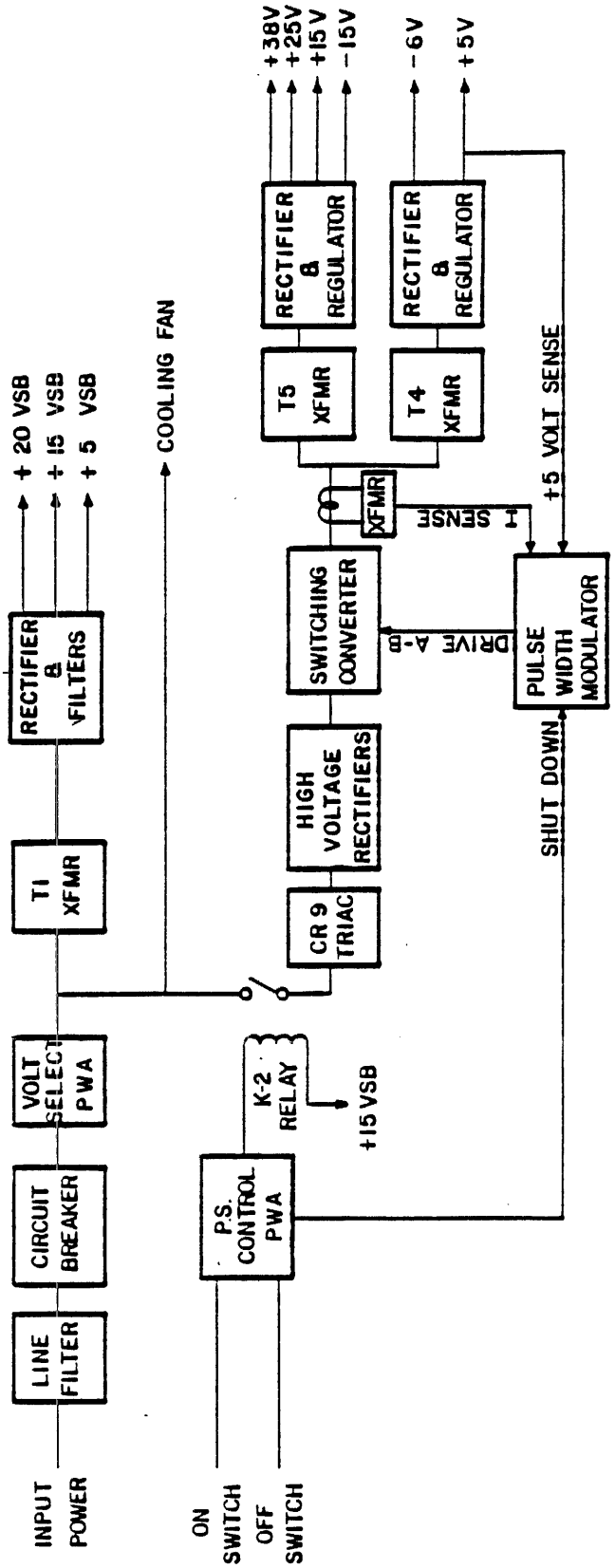

Figure 4-3. POWER SUPPLY BLOCK DIAGRAM

POWER SUPPLY FUNCTIONAL DESCRIPTION

GENERAL

The following discussion of circuit operation is presented in the sequence in which the power supply is activated. Reference should be made to the accompanying block diagrams or to the Power Supply Schematics contained in the Diagram section of the Field Service Manual.

INPUT POWER SELECTION

Input power (120V or 220-240V) is applied from the input line cord connected to the power supply receptacle and into a line filter for noise suppression. Power is then supplied to the transport circuit breaker located on the tape deck. The switch portion of the circuit breaker is labeled 1 (ON) and 0 (OFF). With the circuit breaker placed in the 1 position, input power is routed through connectors and into the Voltage Select PWA. It is, at this point, that circuit selection is made for either 120 or 220-240 volts AC. Refer to Figure 4-4 for circuit differences.

If 120V input power is being applied, the Voltage Select PWA is positioned such that connector J1A is plugged into the Main PWA. If an overload condition is present at transformer T1, the F3 and/or the F2, 1/8A fuses would blow. The fuses are situated so that any external taps of the primary (i.e., pneumatic pump operation) do not affect the fuses, which are used only for detection of an overload condition at transformer T1.

If 220-240V input power is being applied, then the Voltage Select PWA is positioned such that connector J1B is plugged into the Main PWA. With this configuration, the two primaries of transformer T1 are wired in series, with only the F3 fuse applicable to the circuit.

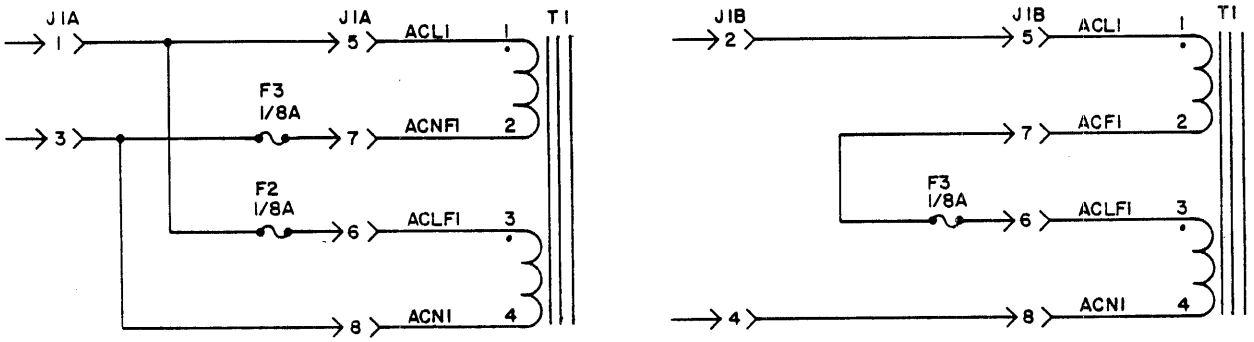

A. 120 VAC Power Input

B. 220-240 VAC Power Input

Figure 4-4. VOLTAGE SELECT PWA

Also, note that, at this point (power applied, circuit breaker ON), the AC line is applied to the cooling fan motor. The cooling blower has a three-line input and is configured as shown for either 120 or 220-240 volt application. Wiring to the neutral line is determined in the Voltager Select PWA.

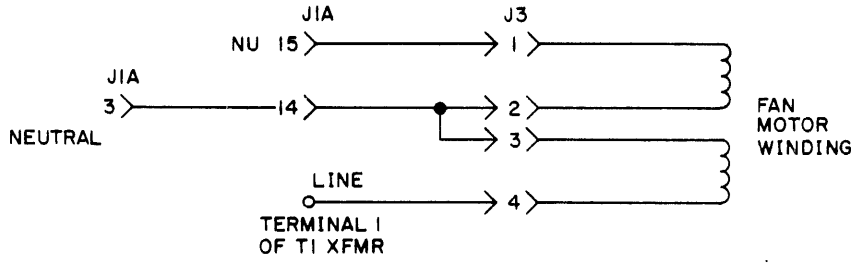

A. 120 VAC Power Input

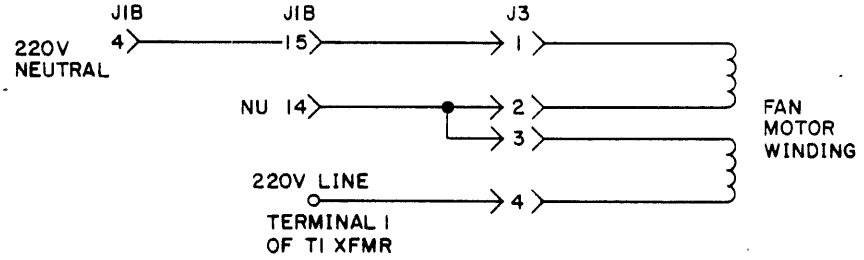

B. 220-240 VAC Power Input

FIGURE 4-5 COOLING FAN WIRING

STANDBY VOLTAGE GENERATION

Standby voltages of +20, +15 and +5 volts are developed to provide a separate supply voltage for all control circuits associated with the power supply. These voltages are present when input power is applied and the circuit breaker is placed in the ON position. Development of the standby voltage is as follows:

Input power is applied to the T1 standby transformer and converted to a +20 standby voltage via a full wave rectifier and filter network. The +20 VSB is used as a control voltage for the half-bridge switching converter and control panel OFF indicator, and is also used to develop the +15 standby voltage.

The +15 standby voltage is developed by a LM317 voltage regulator. The resistor divider network R3/R4 determines the required output of this regulator. Plus 15 volts is used as a supply voltage for the K-1 pump enable relay, K-2 current-on relay, pulse width modulator, over and under voltage detect circuits and master clear circuits, and is used as the source voltage to develop +5 standby voltage.

The +5 standby voltage is developed by a LM317 voltage regulator circuit similar to that used on the +15 VSB line. Plus 5 VSB is used as the supply voltage to operate all of the TTL chips used throughout the power supply. The Q3 transistor located between the +5 and +15 volt circuits is used in the event of the +15V supply being shorted to the +5 volt supply. If the +5V supply increases above 6.2 volts, diode CR36 would forward bias transistor Q3, causing a +5V potential at the resistor divider network of the +15 VSB voltage regulator. The +15 VSB regulator would then be regulated to approximately 6.2 volts, eliminating any damage that would otherwise occur to the TTL circuits fed by the +5V supply.

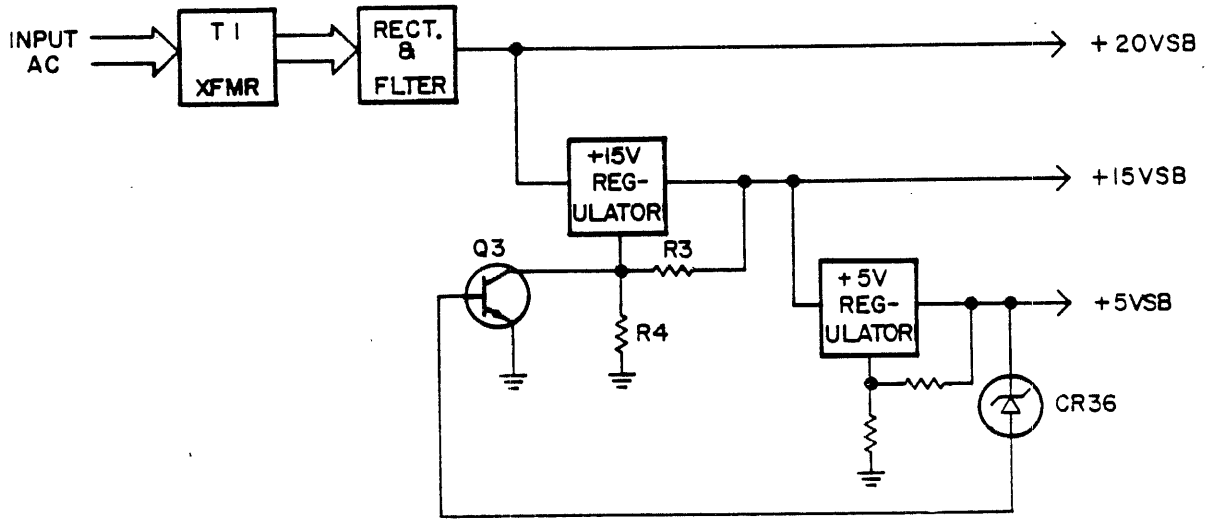

Figure 4-6. STAND-BY VOLTAGE GENERATION

The only effect of the standby voltage outside the power supply is the OFF indicator on the control panel. The Power-On flip-flop (reset at this time) turns on the OFF LED transistor and supplies currented limited (20 ma) +20 VSB to the OFF indicator.

While in the standby mode, the ION signal is a logic 1 (High), keeping the pulse width modulator in a shut-down condition.

POWER-ON SEQUENCE (Refer to Figure 4-7, Power-On Flowchart)

The purpose of the power-on function is to provide the required regulated DC voltages to the transport's control, formatter and servo circuits. The power-on sequence also enables the abnormal (low/over) voltage detect circuits within the power supply.

Power-On is initiated by pressing the ON switch on the control panel. This action causes a momentary turn on of the power-on transistor which triggers the POWER-ON flip-flop to the set state. The reset output of the flip-flop removes the ION (low) signal from the pulse width modulator, enabling a 25 KHz pulse train output (DRIVE A/DRIVE B). These outputs are the control signals to develop the +5, -6, $\pm$ 15, +25 and +38 volt logic levels used throughout the transport. An explanation of the pulse width modulator and DC circuits are discussed in succeeding paragraphs.

Concurrent with the development of the DC voltages, tne POWER-ON flip-flop also initiates a power-on delay, which is used to inhibit detection of low voltage until the DC voltages are expected to attain their nominal voltage level. The reset output of the POWER-ON flip-flop initiates a RC time delay of approximately 300 ms. This delay prevents the ON DLY flip-flop from setting which, in turn, forces the LVCHECK flip-flop to remain reset. At the conclusion of the 300 ms delay, a comparator triggers the ON DLY flip-flop. The LVCHECK flip-flop is now primed to receive a Low Voltage signal, if that condition is detected. Low voltage detection is discussed in succeeding paragraphs.

The ON DLY flip-flop also removes one of three inhibits from the Master Clear circuit.

The Master Clear (MCLR) circuit is provided to the transport logic to "steer" the control functions to a starting or known state during ON/OFF and other detected abnormal conditions. The MCLR circuit contains a time delay circuit of approximately 150 ms, which is used to assure output voltage stability prior to inactivating Master Clear. Three inputs are used to control MCLR: PON (Power On flip-flop), LOWV (Low Voltage), and ONDLY (On Delay flip-flop). The output of the MCLR is held low active during transitional periods, and is allowed to de-activate to a high level after all three controlling inputs are logic high.

At the conclusion of Master Clear, the ON LED transistor is turned on which applies +5V to the LOGIC ON indicator on the control panel.

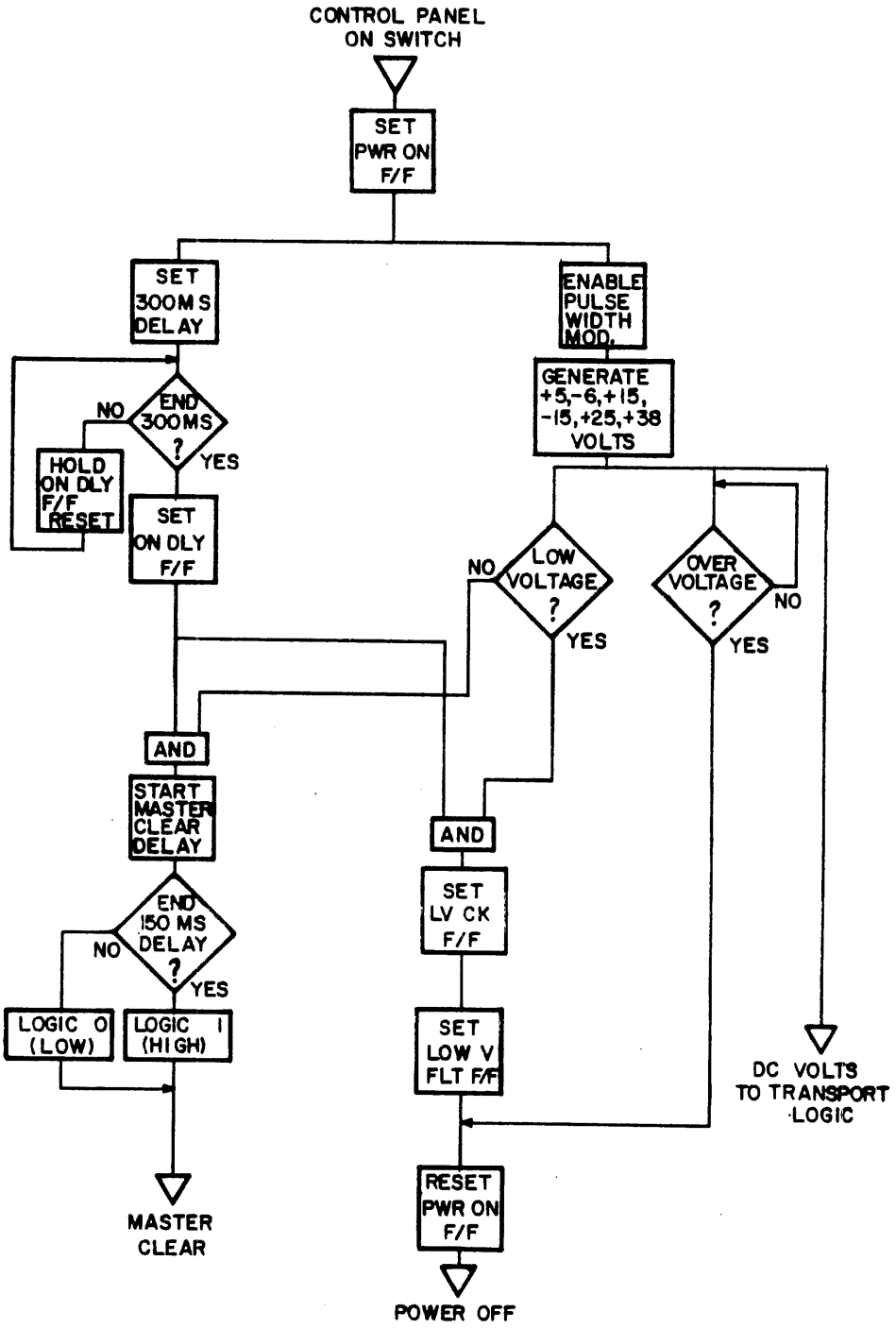

Figure 4-7. POWER-ON SEQUENCE FLOWCHART

SWITCHING CONVERTER (Ref. Figures 4-8 and 4-9)

The high voltage supply for the switching converter consists of two electrolytic capacitors charged through a diode bridge network. The output capacitors are configured such that during 120V operation, the circuit functions as a voltage doubler, with the output capacitors connected in series. During 220-240V operation, the output capacitors are connected in series, and the input line is full-wave rectified. The resulting effect is that an output voltage of approximately 300V is supplied to the switching converter, regardless of whether 120V or 220-240 VAC is supplied. A simplified diagram of output capacitors and bridge configuration is shown in the figures below.

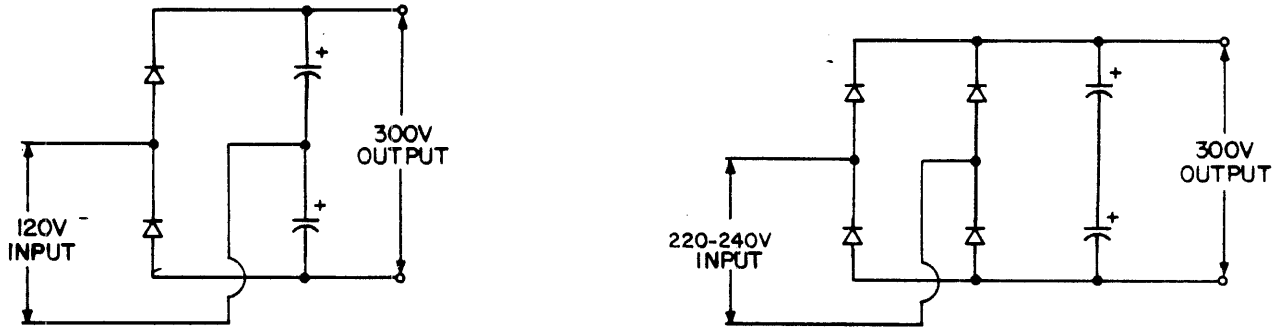

A. 120 VAC Input B. 220-240 VAC Input

Figure 4-8. HIGH VOLTAGE GENERATION

$\overline{\text{DRIVE A}}$ and $\overline{\text{DRIVE B}}$ (from the pulse width modulator) appear at the input of two 75452 peripheral drives. These drivers, in the on state, positive input, provide a ground output. In the off state, the output is an open collector circuit. An example of circuit operation is as follows: As the signal level of $\overline{\text{DRIVE B}}$ goes negative, driver pin 5 becomes an open collector. This provides a circuit from R12, +20 VSB, through the primary of transformer T2, pin 12, to ground of the peripheral driver pin 3. With terminal 2 of T2 at a positive potential, an induced positive voltage is also present at terminal 10 of the secondary of T2, causing transistor Q1 to turn on. With Q1 turned on, a current path is now provided via Q1, T2 windings 5 and 6, and through the primaries of transformers T4 and T5. The induced voltage in the secondary of T4 and T5 is rectified, as described in the DC Voltage paragraph.

During conduction of Q1, the current flow through T2 terminals 5 and 6 applies a "load proportional" drive current to base of Q1.

$\overline{\text{DRIVE B}}$ peripheral driver is turned on (ground output) when the $\overline{\text{DRIVE B}}$ signal returns to the high level. With both $\overline{\text{DRIVE A}}$ and $\overline{\text{DRIVE B}}$ in the on state, the primary of T2 is essentially shorted, causing Q1 to turn off. The charge stored in capacitor C10, during conduction of Q1, is applied as a back bias to Q1 when T2 is shorted. This ensures an immediate turn off of Q1 to produce the resultant waveform shown in Figure 4-9.

When $\overline{\text{DRIVE}}$ A signal goes negative, the peripneral driver pin 3 outputs an open collector, and a current path is provided in the opposite direction through transformer T2 primary winding. Terminal 7 of T2 secondary now has a positive reference and Q2 is turned on. Current flow through T4 and T5 is now in the opposite direction via Q2 and T2 windings 5 and 6.

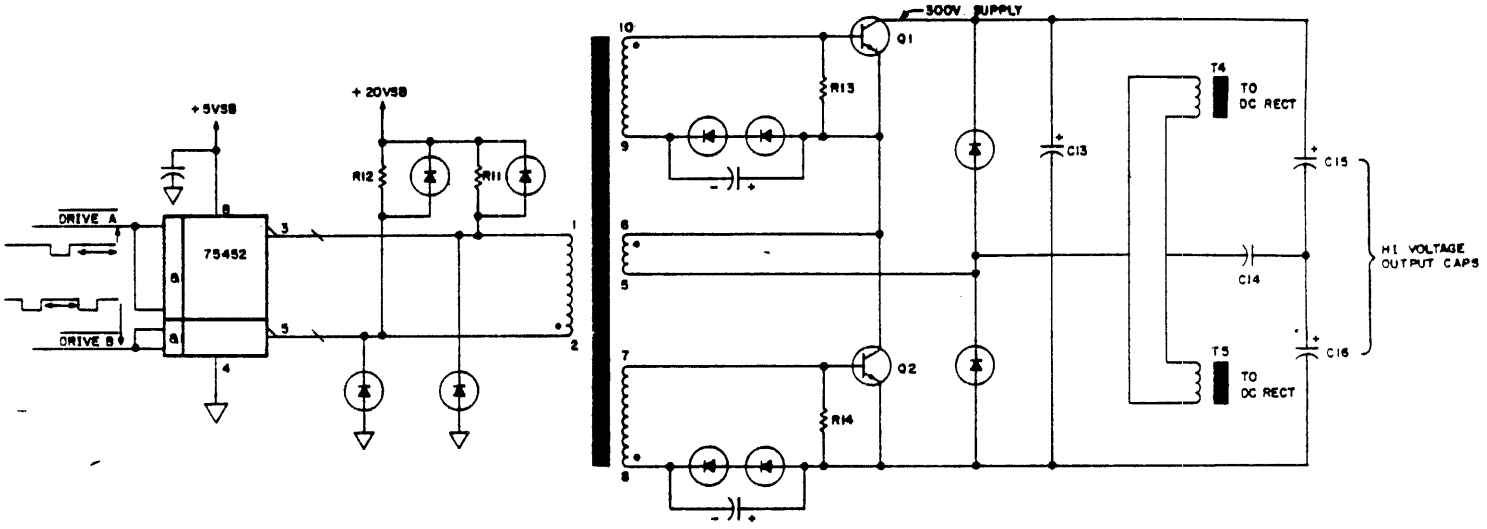

Figure 4-9. SWITCHING CONVERTER CIRCUIT

DC VOLTAGES

The DC voltages generated by the power supply, for use throughout the STU, are as follows:

VOLTAGE	USED ON
+5V	All PC Boards as a supply voltage for TTL circuits
-6V	Read Amplifier Circuits
+15V	Servos, Power Amplifier and Read Recovery VFO
-15V	Servos and Power Amplifier
+25V	Write Driver Circuits
+38V	Power Amplifier

All DC voltages are generated and regulated in a similar manner. The output of the secondary windings of the Switching Converter transformers T4 and T5 are inputted to a full wave rectifier and filtered by a choke/capacitor filter network. Negative 6 volts and + 15 volts are regulated by LM317 and LM337 voltage regulators, with resistor divider networks providing the required regulator programming. Plus 5 volts circuit does not require a voltage regulator due to the compensation circuit supplied by the pulse width generator discussed previously.

LOW VOLTAGE/OVER-VOLTAGE DETECTION

The detector circuits are comprised of the various DC input voltages, voltage divider resistor networks, +2.5 reference voltage and LM339 voltage comparators. If any of the input DC voltages exceed the circuit threshold set up by the resistor networks and reference voltage, the comparator outputs a ground potential. This output then initiates a shut-down of the transport power supply. If the voltages are within the parameters listed below, the comparators will have open outputs.

NOMINAL VOLTAGE	LOW VOLTAGE THRESHOLD	OVER-VOLTAGE DETECTION
+5V	+4.53	+6.0
-6V	-5.0	-6.96
+15V	+12.58	+17.25
-15V	-12.58	-17.25
+25V	+21.25	+28.13
+38V	+25.25	+50.3

POWER SUPPLY SHUT-DOWN

There are three circuits which cause the STU to power-down. They are an over-voltage condition, low voltage condition, and control panel LOGIC OFF switch being pressed.

- Over-Voltage - When an over-voltage condition occurs, the voltage comparators of the detection circuit output a ground potential. This ground signal (labeled OFF) resets the POWER-ON flip-flop. Signal ION becomes a logic 1 (high), causing the pulse width modulator to shut down. With no output from the modulator, all DC voltages to the transport are dropped. Concurrent with the shut-down of the pulse width modulator, the Master Clear signal goes to a logic 0 (low), thereby resetting affected circuits in the transport logic. The LOGIC OFF indicator on the control panel is illuminated by the shut-down condition.

- Low Voltage - When a low voltage condition occurs, the voltage comparators of the detection circuit output a ground potential. This ground signal (labeled LOWV) sets the Low Voltage Check flip-flop, if the ON DLY FF is set, causing LV FAULT FF to set which results in the POWER-ON flip-flop going reset. With POWER-ON flip-flop in the reset state, the power supply is shut down in the same manner as described in the Over-Voltage discussion above.

- Control Panel LOGIC OFF Switch - Pressing the LOGIC OFF switch causes a logic 0 (low) to exist at the reset input of the POWER-ON flip-flop. When the POWER-ON flip-flop is in the reset state, the shut-down of the power supply occurs in the same manner as described in Over-Voltage and Low Voltage discussed in previous paragraphs.

PNEUMATIC SYSTEM FUNCTIONAL DESCRIPTION

The pneumatic system generates and distributes the air pressure and vacuum requirements of the transport. The pneumatic system consists of a carbon-vane centrifugal pump, tape cleaner intake port, filter/regulator assembly, and pressure ports of the air bearings.

The pneumatic pump is enabled by the microprocessor during the load sequence. A PUMPEN signal from the logic energizes K-1 relay located in the power supply. The contacts of K-1 relay triggers a triac which gates the single phase input power to the pump motor. Motor wiring is configured for 120 or 220-240 volt input via the Voltage Select PWA in the power supply.

With the pump motor operating, the air intake (vacuum) side of the pump is from the tape cleaner assembly. Refer to Figure 4-10 for a block diagram of vacuum and pressure distribution. In addition to the tape cleaner intake, a small bleeder hole exists on the elbow fitting between the pump and plastic hose from the tape cleaner. The vacuum affect at the tape cleaner is approximately 8.0 inches H_2O.

There are two configurations for pressure distribution from the pump motor. One configuration uses the rear of the tape deck as an air plenum between the air bearings and filter/regulator assembly. This configuration uses the cylindrical filter can and is shown in Figure 4-10A. The other configuration uses a rectangular filter box as an air plenum rather than the tape deck. This configuration is shown in Figure 4-10B.

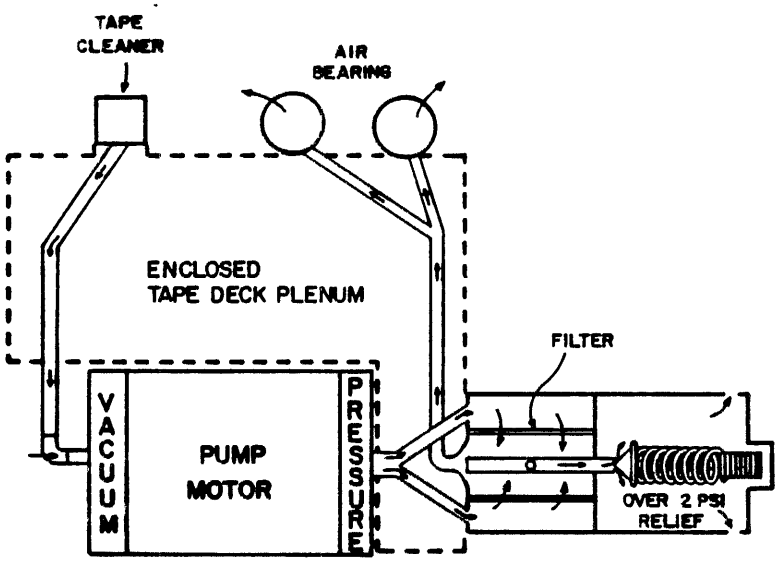

Figure 4-10A. VACUUM AND PRESSURE DISTRIBUTION

The regulator portion of this assembly is a spring-controlled valve that causes any pressure above 2.0 PSI to be bled out of the system. The air pressure is filtered by a high efficiency particle accumulator filter to clean the air prior to application to the air bearings. Air is forced through the filter and a hollow shaft. One end of the shaft is open and contacts the bleeder valve so that pressure in excess of 2.0 PSI is removed. The inside area of the filter (now regulated to 2.0 PSI) is applied to the deck plenum which directs the air pressure to the air bearings.

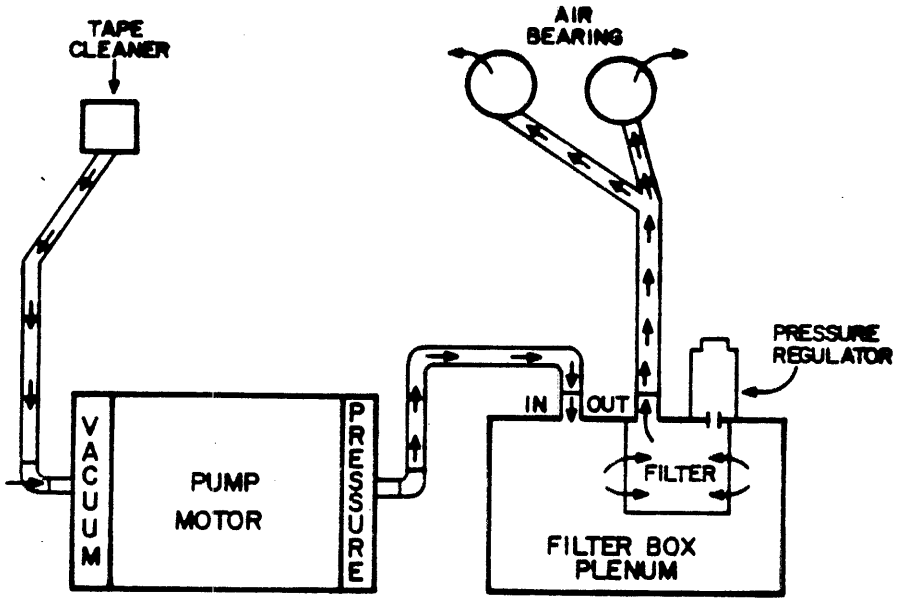

Figure 4-10B. VACUUM AND PRESSURE DISTRIBUTION

PNEUMATIC SYSTEM OPERATIONAL DESCRIPTION

Operation of the pneumatic system is obtained via the power supply by the presence of 15 VSB and low active -PUMP signals. Together, these signals energize K-1 relay and trigger triac CR8. The output of triac CR8 provides the pump with the single phase operating voltage.

The following figures illustrate motor wiring configurations for 120 or 220-240 volt inputs via the Voltage Select PC board in the power supply.

In the 120V mode of opeation, single phase input power is applied to the motor via pins 2 and 6 of connector P2. During initial motor start-up, an external 5 uF capacitor is utilized to create a phase difference. In this configuration, the capacitor is connected in series with the start motor winding.

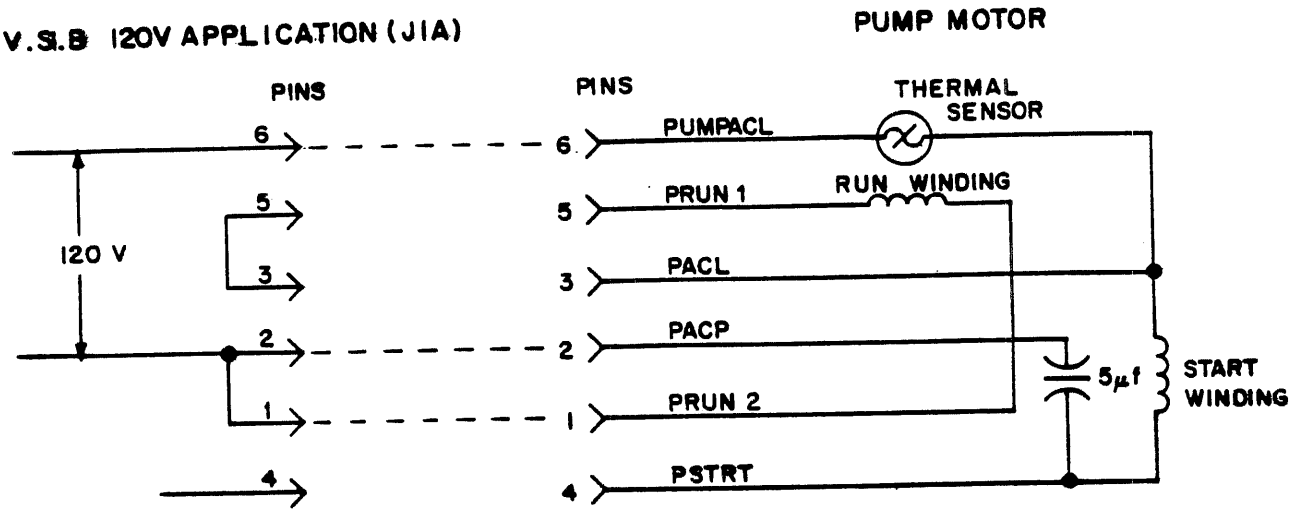

Figure 4-11A. PNEUMATIC PUMP WIRING, 120 VAC CONFIGURATION

In the 220V and 220-240V modes of operation, single phase input power is applied to the motor via pins 5 and 6 of connector P2. During initial motor start-up, an external 5 uF capacitor is utilized to create a phase difference. In this configuration, the capacitor is connected in parallel with the start motor winding. For both configurations, the pump motor contains a self-recovering thermal sensor.

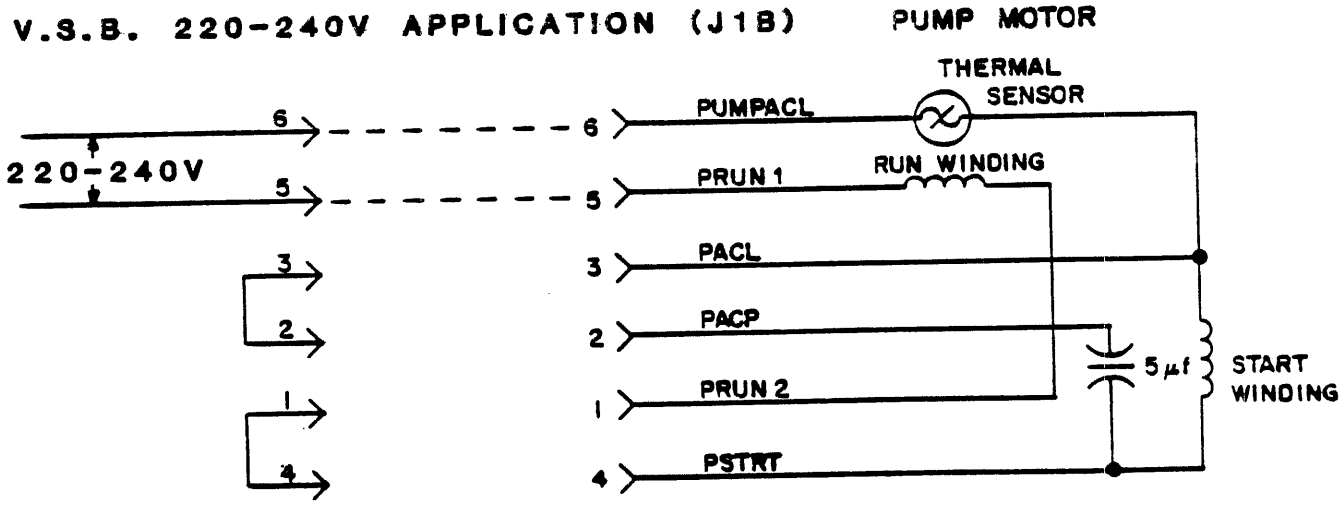

Figure 4-11B. PNEUMATIC PUMP WIRING, 220 VAC AND 220-240 VAC CONFIGURATION

READ/WRITE/SERVO PWA FUNCTIONAL DESCRIPTION

INTRODUCTION

The Read/Write/Servo Board used in the Phase Encoded (PE) Keystone Streaming Tape Unit (STU) has a multiple of distinct functions resident on one board. In order to simplify the functional description, each section will be described separately. The basic functions are as follows:

- o Microprocessor and Associated Hardware
- o Servo For Both Take-up (Velocity) and Supply (Tension) Reels
- o Head Write Drivers and Write Current Programmable Regulator
- o Head Read Amplifiers with Envelope Detection and Clip Voltage Generation Circuits

MICROPROCESSOR

Refer to Logic Diagrams located in the applicable Field Service Manual (See PREFACE) and Block Diagrams for circuit identification. The microprocessor (uP) for the board is constructed with the 6802 uP chip being the basis. The 6802 uP (sheet 2) has two 8-bit accumulators, an 8-bit Condition Code Register and a 16-bit Stack Pointer, Program Counter and Index Register. In addition, the device contains 128 bytes of internal RAM and an internal clock which is operated off of a 4 MHz crystal. All inputs and outputs of the 6802, and all other devices on the processor bus, are TTL compatible. Output devices connected to the processor data bus have tri-state drivers, with some being bi-directional.

The input, output and control lines radiate out to the various peripheral and memory devices on the board from the uP. The desired peripheral or memory device is selected by decoding a portion of the processor address bus, and gating it with the Valid Memory Address (VMA).

A Peripheral Interface Adapter (PIA, 6821) (sheet 3) on the board is used to communicate between the Read/Write/Servo PWA uP and Formatter PWA uP. The PIA's sixteen bi-directional peripheral data lines (Ports A and B), two interrupt inputs (CA1 and CB1), and two peripheral controls (CA2 and CB2) are used to establish a hand-shake communication between the two boards.

In essence, the communication between the two processors is established with Ports A and B (of the PIA) interfacing the processors data and CA1, CB1, CA2 and CB2 acting as the attention and acknowledgement lines to the processors (through the Interrupt Request (IRQ) line to the processor).

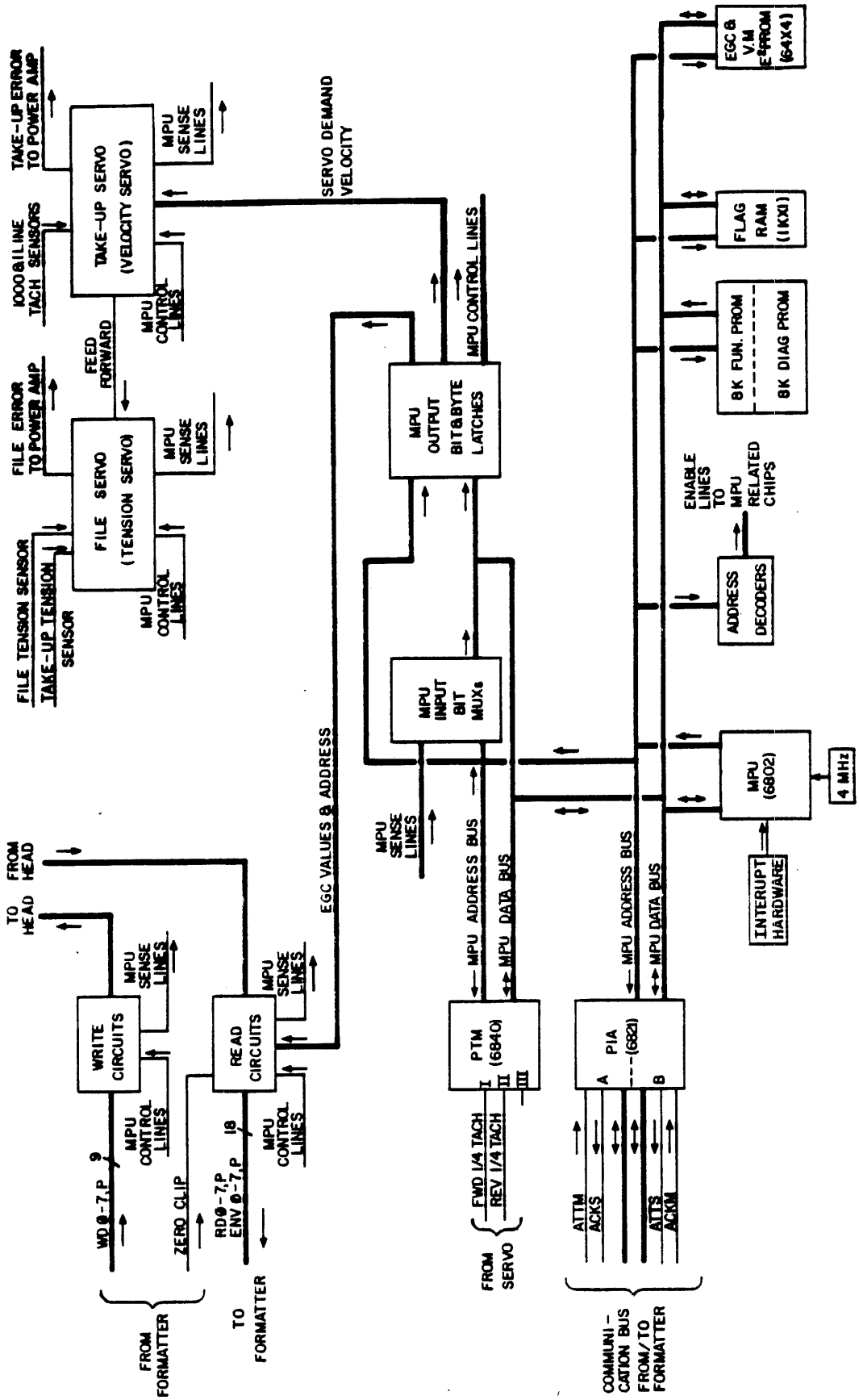

Figure 4-12. READ/WRITE/SERVO PWA BLOCK DIAGRAM

In order for the processor to count servo tachs (forward and reverse), and provide a real time clock for the processor, a Programmable Timer Module (PTM, 6840) (sheet 3) is attached to the processor data bus and related control lines. The PTM contains three 16-bit counters, each independently programmed by the processor through the PTM's control registers. The counters decrement on each subsequent clock period which may be an external clock or processor clock. The source of the clock and desired mode of operation is defined by the contents of the PTM's three control registers. Separate enable lines are provided to gate on or off the clock to each counter. The PTM IRQ to the processor is activated as a result of an interrupt condition from one of the three counters if enabled.

The functional and diagnostic program for the processor reside in two Read-Only Memory (ROM) chips. Each contains 8K x 8 bits and connects directly to the processor address and data bus. When the ROM is enabled by the processor (through the address decoder), the data relative to the current processor address is conveyed to the data bus by the ROM within one processor cycle time. Sockets are provided for both ROM's providing for easy processor code updates.

Various Medium Scale Integration (MSI) devices are attached to the processor data and address bus to allow the processor to interface with the servo, read and write hardware. MSI devices consist of bit input multiplexers, bit output latches, byte output latches, and related address decoding devices (sheet 4).

Single input data bits are passed through the bit input multiplexers, to the processor on data bit 7 (the most significant bit - MSb), upon selection of one of the various bit input multiplexers. The selection of a given data bit and multiplexer (to the processor) is dependent on the address conveyed by the processor to the multiplexer and address decoding devices.

Bit output latches are used to convey individual bits from the processor to the hardware. No connection to the processor data bus is made. Bit output latches are set by the processor writing to the related odd address, and reset by the processor writing to the related even address. The selection of a given bit and bit output latch is dependent on the address conveyed by the processor to the latch and address decoding devices. All latches will be reset by the master reset line.

Byte output latches are used to pass bytes of data from the processor to the hardware. Output data is derived from the processor data bus upon a write operation (by the processor) to the byte output latch address. The selection of a given byte output latch is dependent on the address conveyed by the processor to the address decoding devices. All byte latches will be reset by the master reset line.

A 1K x 1 bit Random Access Memory (RAM, 2102) (sheet 3) device provides the processor with storage for flag bits representing the transport status. The flag RAM is written at both the output bit latch address and flag RAM address; therefore, it contains the flag status bits defined by the processor code, and also reflects the state of all the bit output latches. Flag RAM bits are set by the processor writing to the related odd address, and reset by the processor writing to the related even address. The selection of a given flag bit (in a processor read or write operation) is dependent on the address conveyed by the processor to the flag RAM and address decoding devices. Data can only be read from the flag RAM at the flag RAM address, and not the bit latch address.

A nonvolatile 64 x 4 bit static RAM (2210) (sheet 12) is also attached to the processor to provide a means of storing the read amplifiers gain values and velocity servo offset multipliers. The 64 x 4 bit static RAM front end is overlaid bit-for-bit with a nonvolatile 64 x 4 bit electrically erasable PROM (E^2 PROM). Data is transferred back and forth between the RAM and E^2 PROM by an array store and array recall signals. The selection of the RAM/E^2 PROM and of a given (4-bit) RAM/E^2 PROM byte (in a processor read or write operation) is dependent on the address conveyed by the processor to the RAM/E^2 PROM and address decoding devices. Data is transferred between the processor and RAM/E^2 PROM over the processor data bus upon device selection. A two-position jumper is provided to prevent unintentional changes to the data contained in the E^2 PROM. Data can only be transferred to the E^2 PROM with the jumper in the "STORE" position.

TENSION SERVO

Refer to Logic Diagrams located in Section 5 and block diagrams for circuit identification.

The tension servo system is comprised of two tension servo transducers, input operational amplifiers, reference voltage inputs, take-up motor error input, summing circuit, analog switch circuit for mode selection, and above/below tension level comparators for servo shut-down in the event of component failure.

The two tension sensors are located on either side of the magnetic head. One sensor is located between the velocity servo motor (take-up reel) and the magnetic head, and the second is located between the tension servo motor (supply reel) and magnetic head.

During a load sequence, prior to starting the pump motor, the microprocessor sweeps TTENOFF and FTENOFF levels from their maximum voltage to the minimum voltage. At the point at which the TTENOFF and FTENOFF zero their respective operational amps, the TTENZERO and FTENZERO signals toggle causing the microprocessor to stop the changing sweep levels. The effect of this action is to determine the point at which both tension transducers have a zero offset. The microprocessor maintains the TTENOFF and FTENOFF levels at the determined offset until the next load sequence.

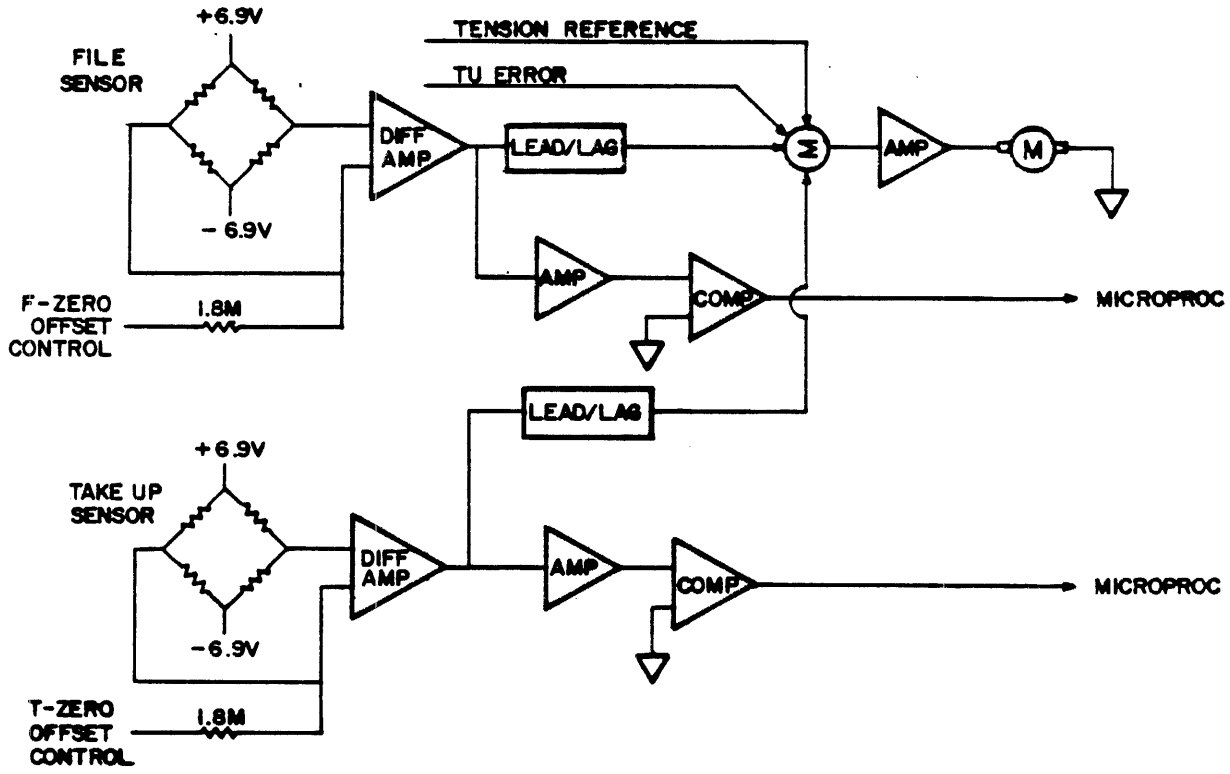

Figure 4-13. TENSION SERVO - SIMPLIFIED

The inputs to the tension servo circuit are TTENTRANS, FTENTRANS, + REF and TUER. The TTENTRANS and FTENTRANS signals come directly from the tension transducers with a signal input proportional to the variance of tension felt by the transducer. The tension reference is derived from a 6.9 volt supply and a 1.78M ohm resistor. This reference voltage is equivalent to 16 ounces of tape tension, and is used to bias the circuit so that 8 ounces of tension is developed. The fourth input is the TUER signal and is proportional to the current in the take-up motor at any given time.

At an optimum condition, where both sensors are sensing 8 ounces of tension, the 16 ounce (+ REF) reference is effectively neutralized. The only dynamic effect on the circuit, at this time, would be the action of the take-up reel motor. With the TUER being summed with the neutralized tension/reference voltage inputs, the tension motor (supply) reacts proportionally to the current in the take-up motor, as indicated by TUER.

Any variance in tape tension would cause a change in the transducer op amps' outputs. This voltage output is subtracted from the tension reference, with the result summed with TUER. The difference of all these signals is multiplied by a high gain amplifier when tape is in motion.

The PRKD input term to the tension servo is active during a Parked or No Tape Motion condition. With PRKD active, the operational amplifier used as a high gain multiplier, after the summing network, is switched to a low gain amplifier.

The above/below tension limit protection circuits consist of a series of comparators, with inputs referenced to predetermined voltage levels corresponding to high or low tension levels. If above or below tension levels are sensed on either of the tension transducers, the microprocessor is notified via signals TAUTL, TBLTL, FAUTL or FBLTL and a shut-down of the servo is initiated. Refer to Figure 4-12 for a simplified presentation of this circuit.

VELOCITY SERVO

The velocity servo consists of a digital-to-analog converter (DAC), decode flip-flops connected to a digital tachometer, operational amplifiers, and three presettable counters. The DAC converts 8 bits of information labeled "Demand Velocity" (DMDVEL) into a signal proportional to the desired velocity. The demand velocity can vary from 0 to 255 with complete control at any speed. The DAC output at 12.5 ips is 1.0 volt per radian per second; at 25 ips, the DAC output is 1/2 volt per radian per second. A radian per second is derived from the linear tape velocity (ips) divided by the radius of the take-up reel.

At the beginning of tape (BOT), the radius is 2.56 inches. At the end of tape (EOT), the radius is approximately 4.9 inches when using a 2400 foot reel of tape. The voltage at the output of the DAC is approximately 4.88 volts at 12.5 ips or 9.76 volts at 25 ips (speed divided by 2.56 inches) at BOT and 2.5 or 5.0 volts at EOT. The voltage at the DAC output will not change when 100 ips is selected, however, the rotational speed will change accordingly. The signal FWD determines the polarity of the analog demand velocity signal for rotation of the take-up motor in each direction.

Rotational velocity is generated and referred to as "analog tachometer" (ANALOG TACH). The analog tach (TP9) is also proportional to 1.0 volt per radian per second in the 12.5 ips mode, and 1/2 volt in the 25 ips mode. In the 100 ips or rewind mode, the analog tach is less (i.e., 8 or 15 times) than the rotational speed. The analog tach is derived from the 2-phase, 1000-line tachometer physically mounted on the rear of the velocity motor. The output signals, phase A and phase B, are decoded into direction and divided down (depending on the speed selected). The divided tach triggers a 128 microsecond one-shot. The decoded direction is logically Anded with the 128 microsecond one-shot and then filtered to become the analog tach.

The analog tach is subtracted from the demand velocity at operational amplifier C8A pin 6 and compensated with a lag-lead filter. This signal is then multiplied by 1 or 8, depending on speed and becomes the take-up error (TUER). The take-up error is proportional to the desired current in the velocity motor and is equivalent to 1.0 volt per amp.

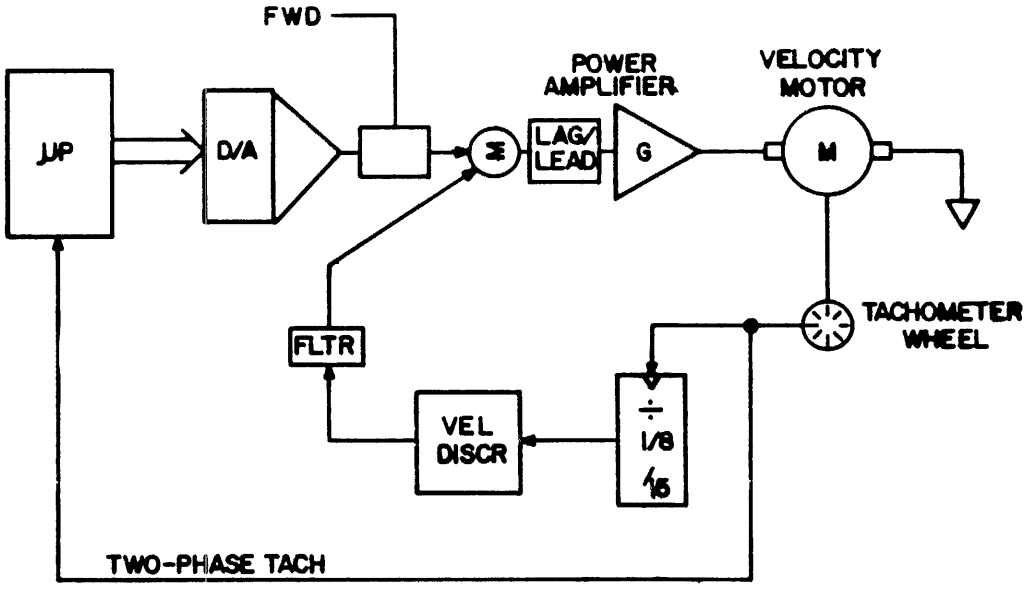

Figure 4-14. VELOCITY SERVO - SIMPLIFIED

WRITE CIRCUITS

(Reference Write/Erase Block Diagram and Logic Schematics located in Section 5.

Write Drivers

The write drivers and control circuits consist of 18 write drivers (2 per track), write and erase head voltage control, degauss, and erase sense circuits. Write data is gated via the TWD0-7,P input data lines through the write drivers by the presence of WRITE ENABLE and the absence of FILE PROTECT signals (the write ring is installed in supply reel).

The write drivers are arranged so that two opposite drivers are servicing one input line. A true signal (logic 1) on the input line causes one driver to assume an open output while the complimentary driver assumes a ground output. Thus, current flows through the head coil in one direction only. If the input line is false (logic 0), then the write drivers' outputs are reversed and the head current flow is in the opposite direction.

Write head voltage to the head coils is developed as follows: Q2 transistor is switched on by the absence of FILE PROTECT and REWIND signals. As Q2 is turned on, +24 volts is applied to pin 3 of the voltage regulator. Pin 1 input of the regulator is determined by the output of OP AMP C16 and the status of Speed Select. Selection of either H SELECT 0 or L SELECT 0 introduce a Select-By-Test resistor which is matched to the impedance of the head. This signal is applied to the voltage regulator circuit as WRITE CUR along with resistor R126, and determines the voltage to the individual head coils.

Degauss

During the course of a write operation, a condition of residual magnetism is built up around the write coils. If the residual magnetism is not neutralized, the possibility of partial tape erasure is possible during succeeding tape operations.

In order to prevent this unwanted magnetism, the STU performs a degauss operation at the conclusion of a write function. The degauss capacitor C71 is charged and remains charged as long as a write operation is in progress. At the conclusion of a WRITE command, the DEGAUSS signal effectively cancels out the positive voltage charging capacitor C71 and the capacitor begins to discharge through resistor R124. Thus, pin 5 input to OP AMP C16 sees a decreasing positive voltage, the affect of which results in an exponential decay of write current. Concurrent with the discharge of the degauss capacitor and decaying write current, the write data input lines are switched at a 10 KHz rate. As the write current is switched at 10 KHz, the exponential decay of the current waveforms causes any residual magnetism to be neutralized.

Erase

The erase circuit is enabled by the presence of ERASE ENABLE and the absence of REWIND signals, and uses an open collector driver circuit to provide ground return for erase current. Erase voltage is supplied by the same +24 volts used to develop the write voltage. An integral part of the erase circuit is an OP AMP configured to detect the level of erase current, and provide an ERASE SENSE signal to the sense multiplexers.

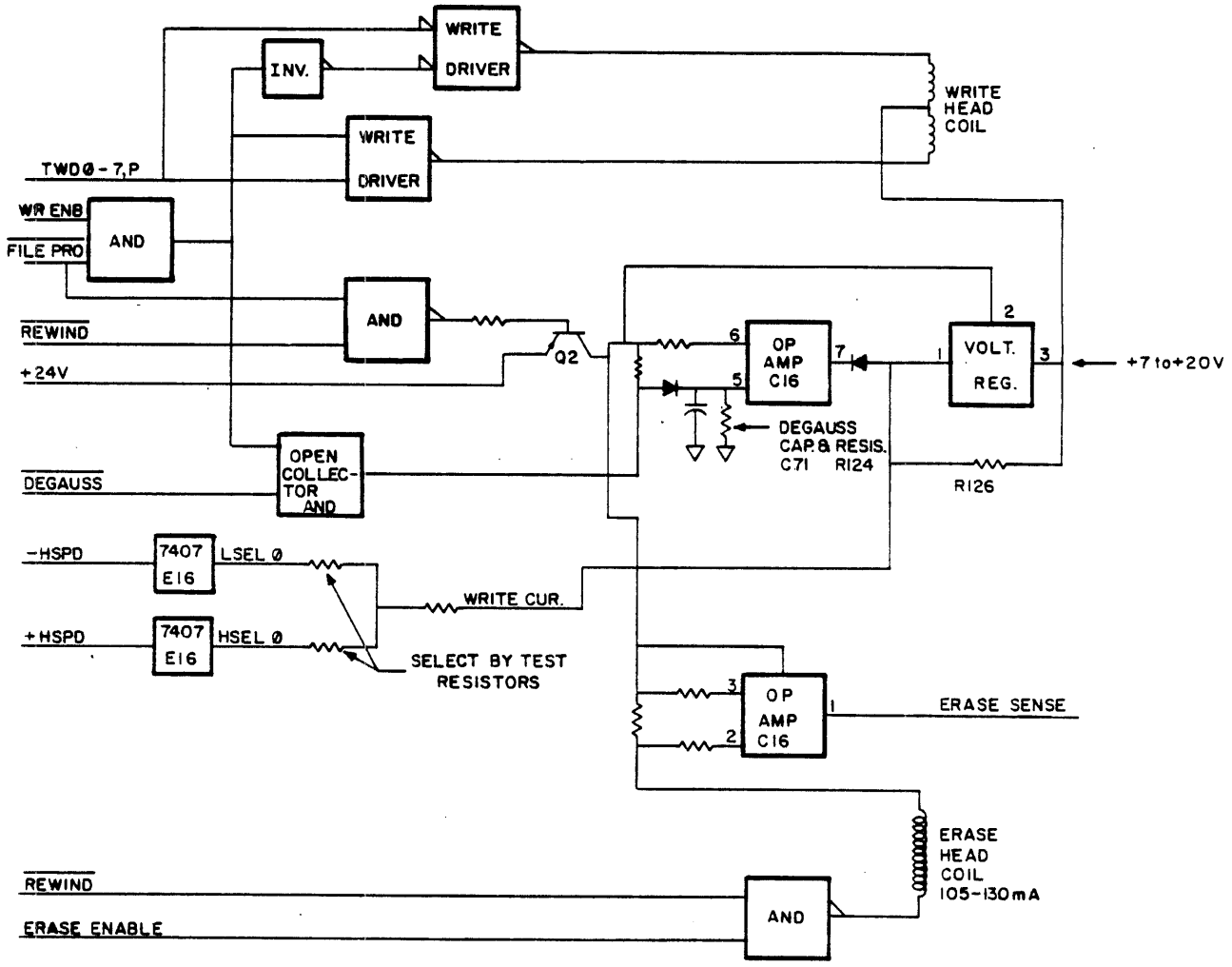

Figure 4-15. WRITE/ERASE BLOCK DIAGRAM

READ CIRCUITS

(Reference Read Timing/Block Diagram or subsequent pages and Logic Schematics located in Section 5.

A read operation is initiated from the host controller during any read or write operation. As tape motion is initiated and tape passes across the read head coils, recorded data on the tape induces a voltage in the head coils. This voltage has to be amplified and circuit selection made depending on tape speed. The entire read chain is responsible for detection of data, amplification of weak readback signals, and conversion of the analog signal to a digital TTL logic level for use in the control and formatter portion of the STU.

As data is detected when tape passes the read head, the induced voltage in the range of 2.0 to 4.2 MVp-p (12.5 ips), 4.0 to 8.4 MVp-p (25 ips), or 10.0 to 22.0 MVp-p (100 ips) is differentially coupled to a preamplifier. This preamplifier provides a gain of 100 to the relatively low signal from the head coils. After amplification, the READ signal is routed to two separate filter and differentiator circuits, which also tend to normalize different voltage amplitudes prior to the second stage of amplification.

The second amplifier stage is selected by the presence of eitner the low or high speed input signal. If low speed is active, then that amplifier provides further amplification of the READ signal from the low speed filter and differentiator circuit. The 100 ips amplifier will have no output at this time due to the absence of the 100 ips input signal. The amplified READ signal is then routed through isolation resistors and a low-pass filter and attenuator. The low-pass filter eliminates any high frequencies above the data frequency. Because of tne isolation resistors and attenuation of the low-pass filter, the signal is subjected to a third stage of amplification. This stage utilizes an Electronic Gain Control (EGC) circuit to determine the gain. Refer to the EGC discussion in succeeding paragraphs. The EGC level to the amplifier ensures that the output of the third stage is approximately 1.5 volts peak-to-peak as seen at the analog test points (TP1 thru TP9).

The third stage amplifier outpput is connected to a comparator used as a zero cross detector. If the differential input signal is positive, the zero cross detector output switcnes to a positive voltage. If the differential input signal is negative, the zero cross detector output switches to a ground potential.

A second comparator is also connected to the third stage output. This circuit compares the single-ended output voltage of the third stage with a clip level voltage. The clip levels, as follows, are a percentage of the nominal input voltage and are predetermined by the microprocessor, depending on the type

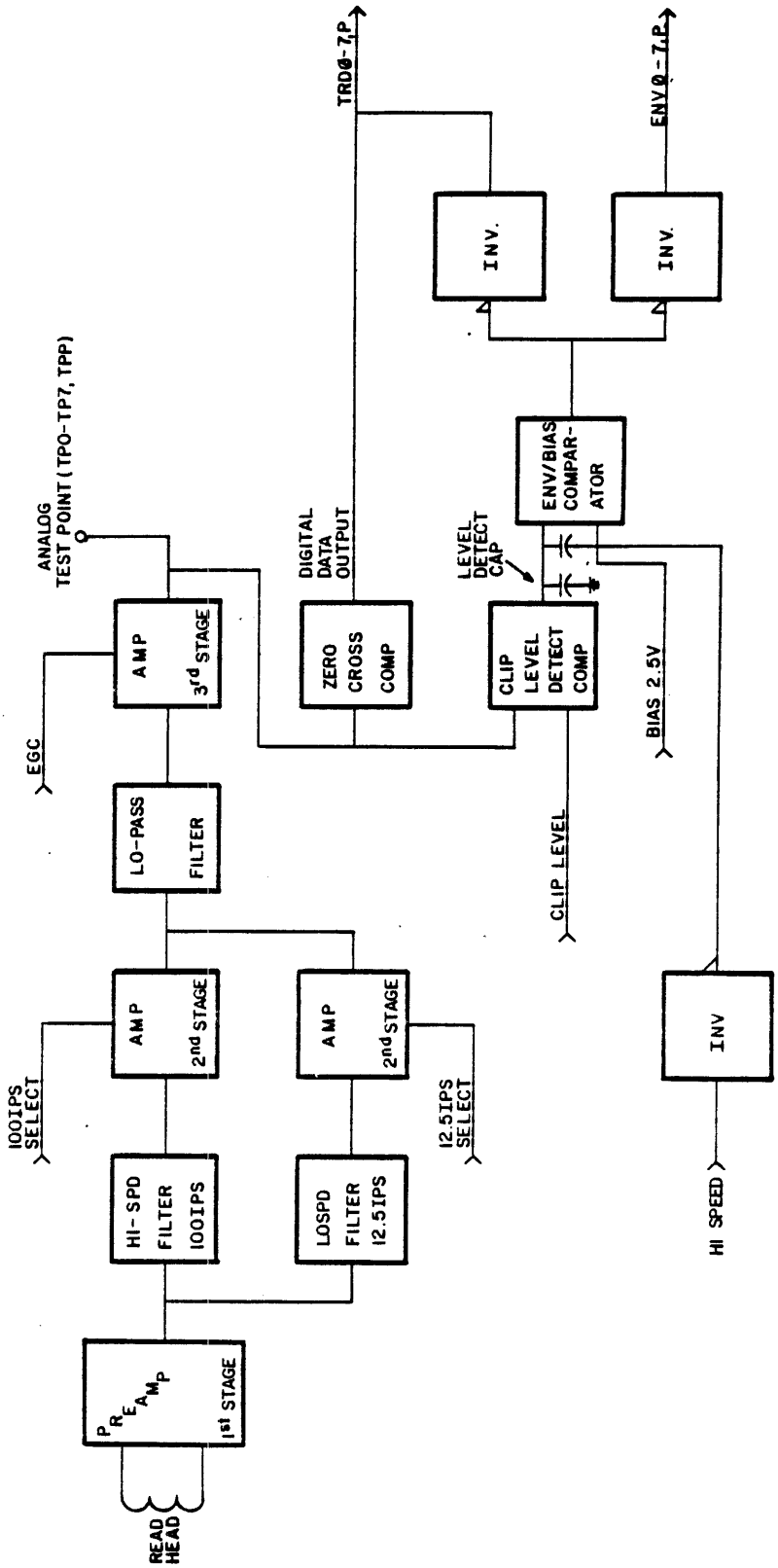

Figure 4-16. READ CIRCUITS BLOCK DIAGRAM

of operation being performed. Because a maximum readback amplitude is expected during a read-after-write operation, the clip level is relatively high (25%) to ensure that a strong signal has been written.

During a normal read operation, the microprocessor sets the clip level to 0.3% after recognizing the beginning of the preamble. This 0.3% clip is maintained throughout the data record until the postamble is detected. The clip level is then set to 16% while the read head is traversing the inter-record gap. This insures that any noise in the gap will not be detected as data.

Referring to the waveform figure, it can be seen that the greater the amplitude of the analog signal, the wider the output pulse of the clip level detector. The pulse width should always be greater than 30% of the analog waveform.

The output of the level detector is coupled directly to a bias comparator which establishes the validity of the detected data. As the analog input to the level detector exceeds the clip level, the level detector assumes an open collector output. This allows +5 volts to charge capacitor C110. As C110 charges above the bias voltage, the bias comparator output goes to ground potential. As long as valid data is being received, the

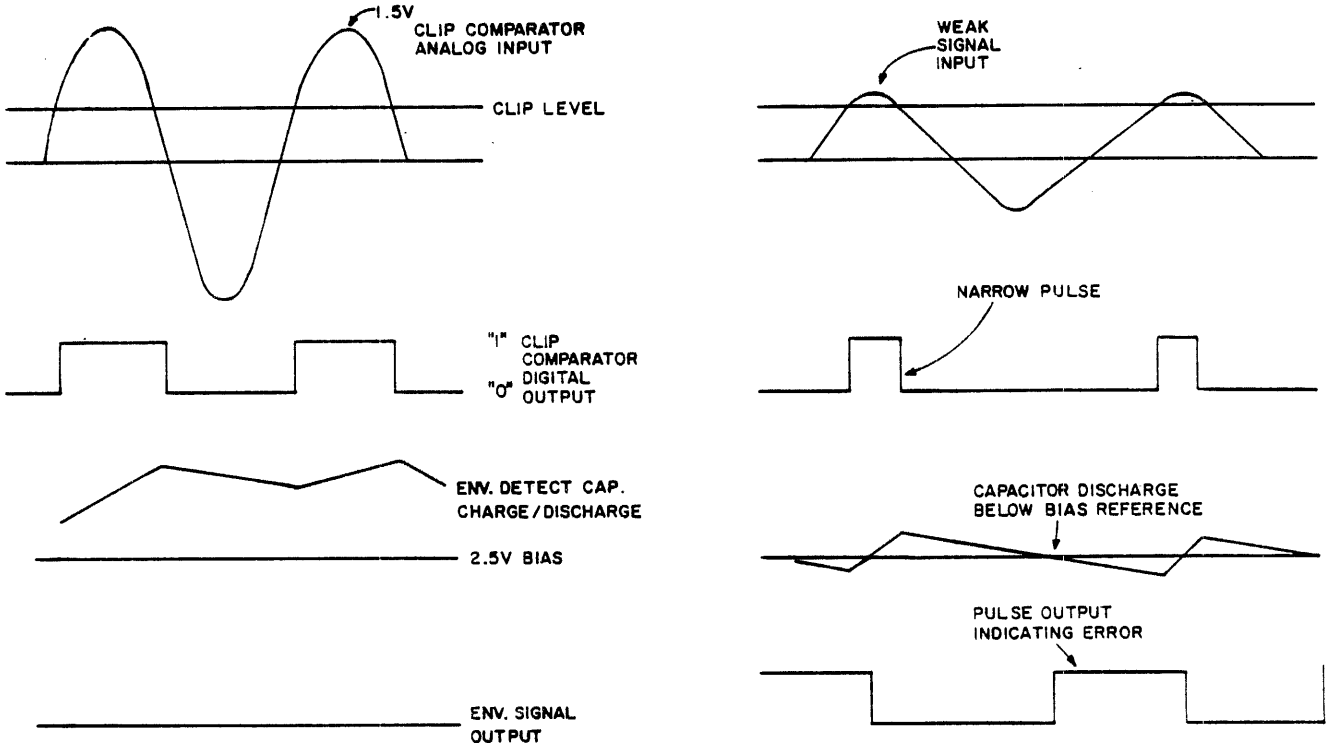

A. CORRECT DATA CONDITION

B. WEAK SIGNAL ERROR CONDITION

Figure 4-17. READ CHAIN WAVEFORMS

pulse width of the level detector should be of sufficient duration (30%) so that capacitor C110 does not discharge below the 2.5 bias voltage. If the analog signal is of such small amplitude that the level detector outputs a pulse of less than 30% of the waveform, then capacitor C110 is allowed to discharge below 2.5 volts and the bias detector outputs a positive pulse. This condition is recognized by the formatter as an error, and the data is inhibited from appearing on the output lines.

ELECTRONIC GAIN CONTROL (EGC)

EGC is designed to replace the potentiometer that would normally be used to determine the readback amplitude of recorded data. The circuit is activated through the use of customer engineer diagnostics when the Read/Write/Servo PWA or magnetic head is replaced, or if reported errors are such that the customer engineer determines the need to activate EGC.

The EGC lines during normal operation are constant, and provide the appropriate input to the third stage amplifiers to set a nominal output of 1.5 volts at the analog test point. This output voltage may vary slightly due to magnetic head wear or the type of magnetic tape being used.

Operation of the EGC circuit during the customer engineer diagnostics is as follows: A write function is initiated and the readback signals are sampled through the ENV outputs of the read chain, with an EGC clip level set at 96%. The test is initiated with a binary bit count of 128 (80 Hex) applied to the Digital-to-Analog Converter (DAC). The output voltage of the DAC is then applied to an analog multiplexer. The microprocessor provides the input gating to the multiplexer so that the voltage conversion of the 128 count is applied to each of the nine read circuits on an individual basis.

Using one read channel for discussion purposes, EGC voltages are set up as follows: The voltage equivalent of the binary 128 count is gated through the analog multiplexer and charges a 0.1 uF capacitor to the value whereby, the read amplifiers have a mid-point gain. As data is read from tape, the output of the read amplifier is sampled by the envelope comparator. If the ENV signal is low, the microprocessor uses a successive approximation method of the binary count to the DAC so that an optimum EGC voltage is applied to the read amplifiers. If the ENV signal is low or inactive, the microprocessor lowers the binary count by half (64) to the DAC. The DAC then outputs a voltage equivalent to the 64 count to the EGC capacitors. The read amplifier gain is increased and the ENV signal is again sampled by the microprocessor. The microprocessor adjusts the binary count either up or down by half of the previous count,

depending on whether the ENV signal is active or inactive. This method of successive approximation is continued until the microprocessor determines, via the ENV signal, that the read gain is optimum. In this manner, the count "zeros in" on the point at which the ENV signal is active except for extraneous pulses going inactive. At this point, it can be assumed that, if the ENV signal is mostly active at the 96% EGC clip level, then when the normal clip of 25% (WRITE) is used, then ENV signal will be a solid active level.

The binary count for each read channel is stored in memory. During normal on-line operations, the microprocessor will access memory every 11 milliseconds and the EGC voltage charges the 0.1 uF refresher capacitor to maintain a constant gain of the third stage read amplifier.

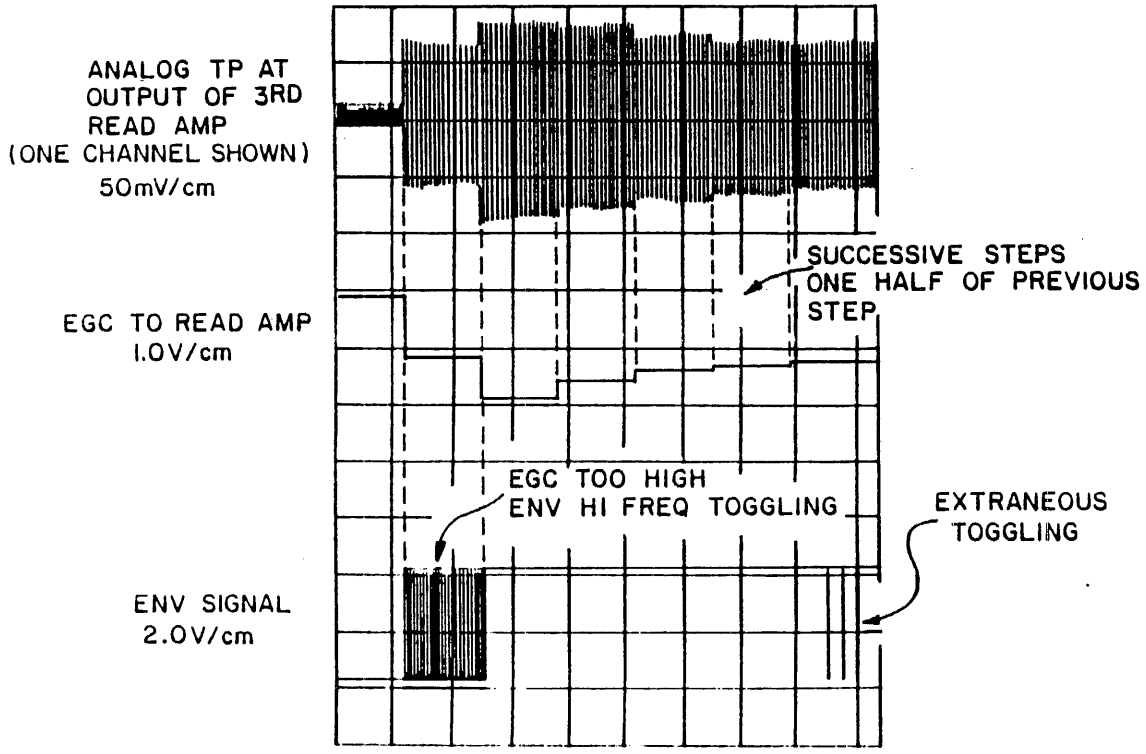

Figure 4-18. ELECTRONIC GAIN CONTROL WAVEFORMS

MICROPROCESSOR

The formatter microprocessor (up) for the PWA is constructed with the 6802 up chip being the basis. The 6802 up has two 8-bit accumulators, an 8-bit Condition Code Register and a 16-bit Stack Pointer, Program Counter and Index Register. In addition, the device contains 128 bytes of internal RAM, and an internal clock which is operated off of a 3.84 MHz crystal. All inputs and outputs of the 6802 and all other devices on the processor bus are TTL compatible. Output devices connected to the processor data bus must have tri-state drivers. The timing diagrams for the processor read and write operations are located in Figures 4-21 and 4-22 respectively, with actual operating timing constraints listed in Table 4-1. The processor is operated at 0.96 MHz rate.

The input, output and control lines radiate out to the various peripheral and memory devices on the board from the top. All of the attached peripheral and memory devices are able to function at the processor rates as listed and illustrated in Table 4-1 and Figures 4-21 and 4-22. The desired peripheral or memory device is selected by decoding a portion of the processor address bus and gating it with the Valid Memory Address (VMA).

The MC6821 Peripheral Interface Adapter (PIA) is a programmable device and interfaces the 6802 up to the read/write control logic. It has sixteen bi-directional peripheral data lines (Ports A and B), two interrupt inputs (CA1 and CB1), and two peripheral control lines (CA2 and CB2). Four control registers (within the PIA) are used to define the data direction of each bit in Ports A and B, the active transition for CA1 and CB1, and the active or response transition of CA2 and CB2.

Table 4-1. PROCESSOR READ/WRITE TIMING CONSTRAINTS

CHARACTERISTIC	SYMBOL	MIN	TYP	MAX	UNIT
Address Delay	t_{AD}	--	--	270	ns
Peripheral Read Access Time $t_{acc} = t_{ut} - (t_{AD} + t_{DSR})$ $(t_{ut} = t_{cyc} - t_{o})$	t_{acc}	--	--	530	ns
Data Set-Up Time (Read)	t_{DSR}	100	--	--	ns

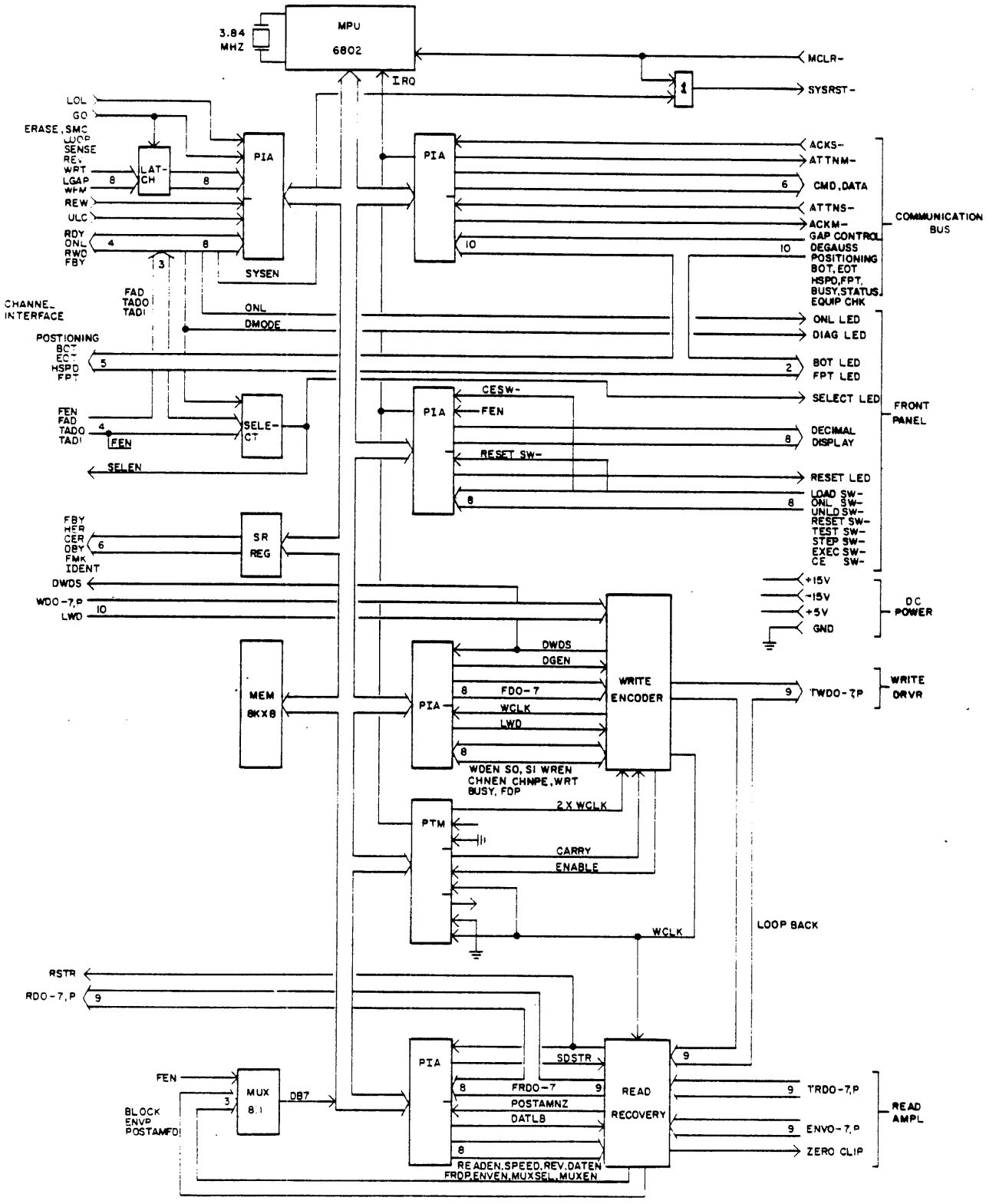

Figure 4-19. FORMATTER/CONTROL BLOCK DIAGRAM

Table 4-1. PROCESSOR READ/WRITE TIMING CONSTRAINTS (Cont'd)

CHARACTERISTIC	SYMBOL	MIN	TYP	MAX	UNIT
Input Data Hold Time	t_H	10	--	--	ns
Output Data Hold Time	t_H	30	--	--	ns
Address Hold Time (Address, R/W, VMA)	t_{AH}	20	--	--	ns
Data Delay Time (Write)	t_{DDW}	--	165	225	ns

Five PIA's are used on the board. PIA 0 is used to communicate between the read/write/servo board up and formatter board up. The communication between the two processors is established with Ports A and B (of the PIA) interfacing the processor's data and CA1, CB1, CA2 and CB2 acting as attention and acknowledgement lines to the processors (through the Interrupt Request (IRQ) line to the processor). Figure 4-20 indicates the basic interface protocol across the PIA between the processors.

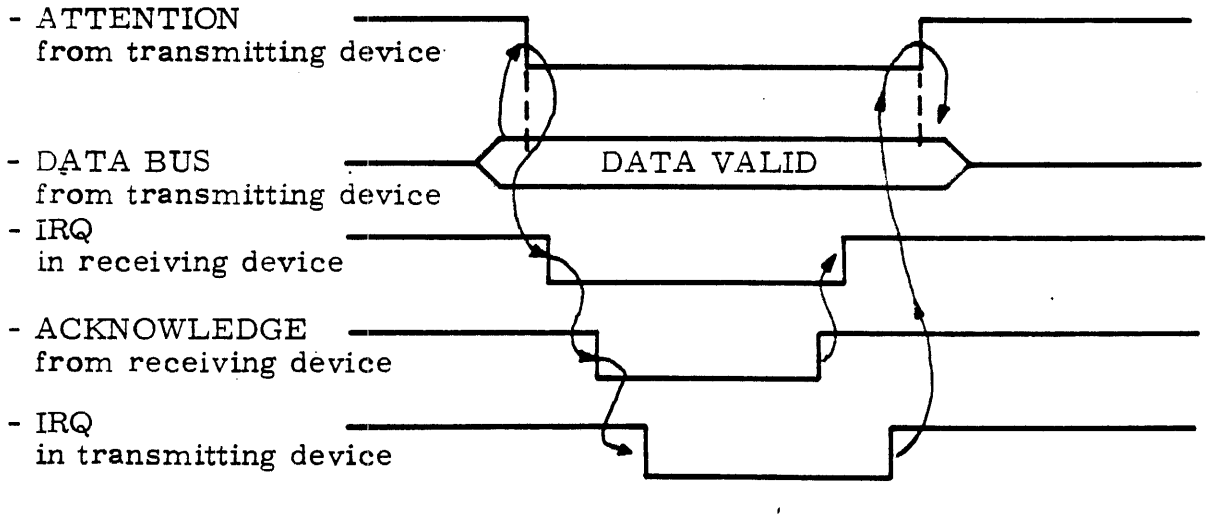

Figure 4-20. PIA COMMUNICATION PROTOCOL

PIA 1 is used to interface the up to the operator panel. Part A is connected to the eight switches on the control panel and Part B is connected to the display drivers. The PIA could be programmed to cause an interrupt on pressing of the Reset or CE switch, or on transition of the FEN line. PIA 2, along with other logic, is used to interface the up to the user controller/adapter. PIA 3 is used to control the read logic and PIA 4 is used to control the write logic on the board.

A Programmable Timer Module (PTM 6840) is attached to the processor data bus and related control lines. It generates proper write clocks, a control line (Carry) at preamble and postamble time in the write operations, and it helps the up generate a various amount of delays during the read/write operations. The PTM contains three 16-bit counters, each individually programmed by the processor through the PTM's control registers. The counters are highly versatile in that each can be programmed by the processor to operate for squarewave generation, the gated delaying of signals, generation of single pulses with controlled duration, the pulse width modulation. The counters decrement on subsequent clock periods which may be an external clock or processor clock. The source of the clock and desired mode of operation is defined by the contents of the PTM's three control registers. Separate enable lines are provided to gate on or off the clock to each counter. The PTM IRQ to the processor is activated as a result of an interrupt condition from one of the three counters if enabled.

The source of the IRQ (from the PTM) is located by reading the single PTM status register, and is then cleared by reading the respective interrupting counter's 16-bit contents. A Reset bit in Control Register 1 of the PTM can be used to hold all counters inactive.

The functional and diagnostic programs for the processor reside in a Read-Only Memory (ROM) chip. It contains 8K x 8 bits and connects directly to the processor address and data bus. When the ROM is enabled by the processor (through address decoder), the data relative to the current processor address is conveyed to the data bus by the ROM within one processor cycle time.

An 8-bit addressable latch and an 8-bit input multiplexer are used to increase I/O capability of the processor. Single input data bits are passed through the bit input multiplexer to the processor on data bit 7 (the most significant bit [MSB]), upon selection of the bit input multiplexer. The selection of a given data bit and the bit input multiplexer (to the processor) is dependent on the address conveyed by the processor to the multiplexer and address decoding device. The bit output latch is used to convey individual bits from the processor to the hardware. No connection to the processor data bus is made. The bit output latch is set by the processor writing to the related "Cx" address, and reset by the processor by writing to the related "8x" address. The selection of a given bit and bit output latch is dependent on the address conveyed by the processor to the latch and address decoding devices.

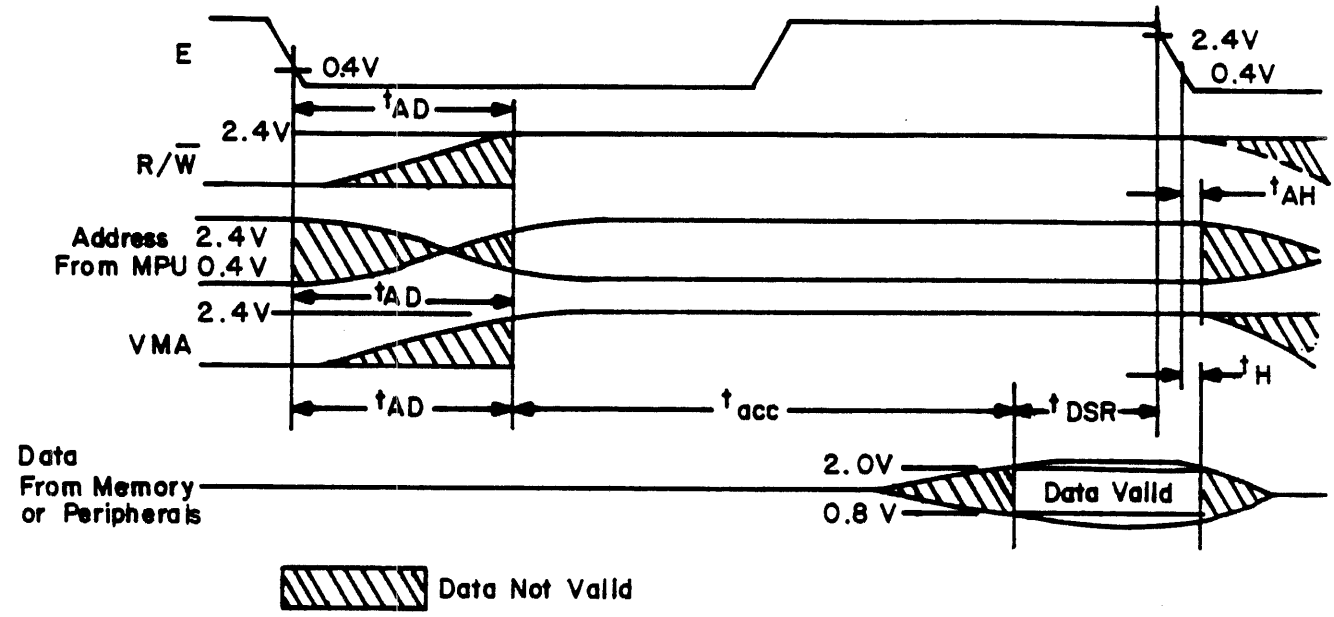

Figure 4-21. PROCESSOR READ OPERATION

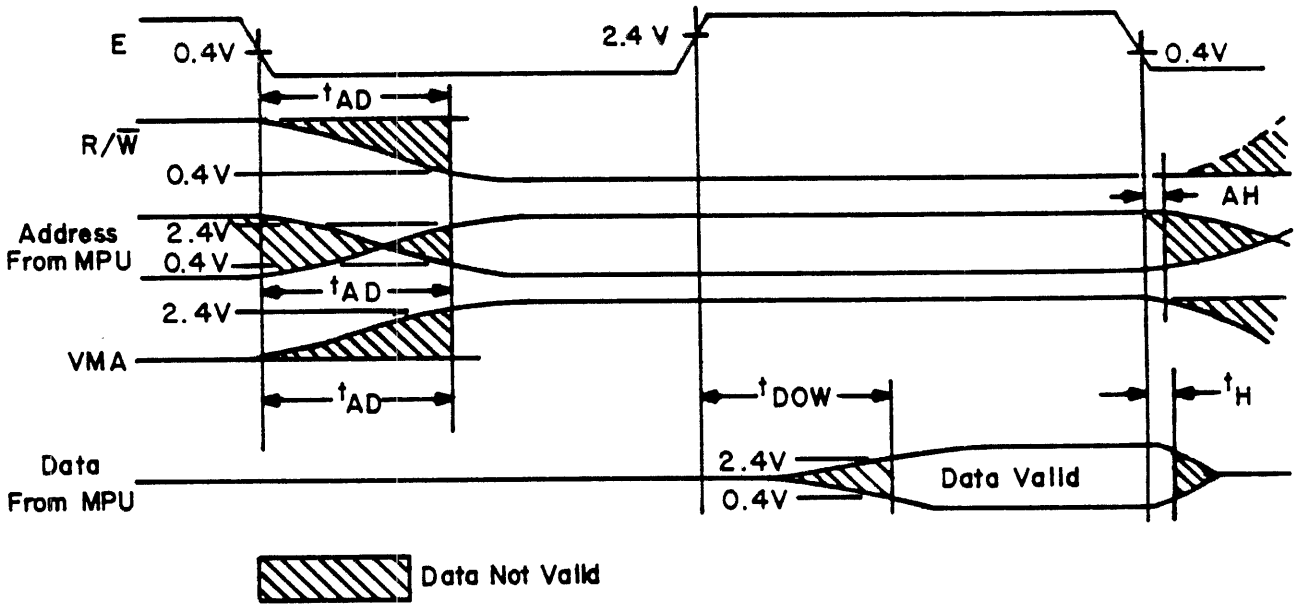

Figure 4-22. PROCESSOR WRITE OPERATION

WRITE CIRCUITS

The write operation is controlled by PIA 4, PTM and write circuits. The PTM is programmed by the microprocessor to generate write clock, depending upon speed and function to be performed. The PTM is also programmed to generate the control signal "CARRY" at preamble and postamble time during the write operation. The Timer 3 on the PTM is used as a variable timer to control a various amount of time delays during the read/write operation. A brief description of the signals controlling the write operation follows:

Signal	Description
WCLK	Write Data Frequency programmable by microprocessor.
CARRY	Controls Preamble and Postamble in Write.
WRT BUSY	Write operation is in progress.
CHNPE	Channel is in Parity Error.
CHNEN	Enables Channel side for interface data.
WDEN	Enables Write Data to device.
WREN	Enables Write operation.
S1,S0	Selects ID, File Mark, Channel Data or Processor-generated Data.
FD0-FDP	Processor-generated Data.
LWD	Processor-generated Last Word signal.
DGEN	Enables Degauss operation.

A PROM (82S123) is used in the write circuits. It controls writing of preamble, data and postamble and it also controls the ID, file mark, data and format write operations, and generates the Demand Write Data Strobe (FDWDS). The write operation is explained with the timing diagram in Figure 4-23.

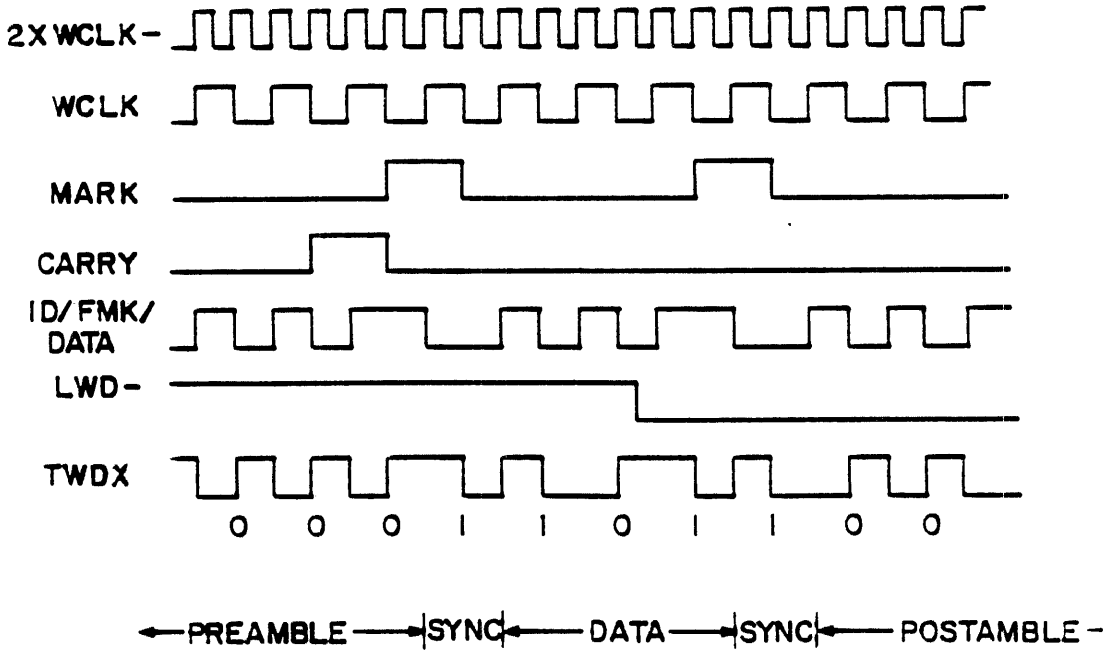

Figure 4-23. FORMATTER WRITE OPERATION

READ CIRCUITS

The read circuits consist of a Variable Frequency Oscillator (VFO), deskew buffer circuits for each track and error correction circuits. PE read signals from the tape transport are applied to read circuits, one for each channel.

On the tape, bits on the various recording tracks belonging to the same byte cannot be expected to lie on a straight line across the tracks or, upon reading, to be received by the formatter at the same time. This is due to head and tape path imperfections. The data is said to have skew and, for PE data, the formatter must deskew the data such that the bits belonging to the same byte, upon being transferred to the CPU, are all transmitted at the same time. This is accomplished in the formatter by storing and delaying the first arrived bits until all the bits belonging to the same byte have arrived, and then transferring them collectively to the CPU.

The read data from the device comes on lines TRD0-TRDP. In the formatter, it goes through deskew process. The deskew circuits consist of a PROM and a FIFO along with some other logic. The PROM generates a Data Strobe (DSTR-) when a new data bit comes in; it generates Data Ready (DRDY) when the bit is deskewed and ready for loading into FIFO; it recognizes the first one transition as a SYNC and generates a SYNC pulse; and it also generates a Drop-Out (DROP) upon indication of Drop-Out or Drop-In. The FIFO allows for deskew in the read data. Once the SYNC is recognized, it starts saving further data until all other tracks are ready with the data. It generates Bit Ready (BRDY) when the bit is ready for error detection, and then outputs to the host system. A counter is used to create a window for data and phase transitions. The data strobe initiates the window, and the counter counts the clocks and generates a pulse (CARRY) to reset the window (DGATE). The timings in the deskew buffer operation is shown in Figures 4-24 and 4-25.

Single track "on-the-fly" error correction is performed on the data. The error correction circuit uses a PROM and other logic circuits. The PROM, called "DROP PROM", generates signals NO DROP, MLT DROP and SGL DROP/CER when there is no Drop-Out in the block, more than two tracks dropped out in the block, and only one track dropped out in the block respectively. A parity checker checks the parity of the read data and generates PE (Parity Error) on even parity data. Single track error is corrected by using the PE and DROP signals for each track. If there is a PE without any track Drop-Out, a NO TRK PTR (No Track Pointer) is generated which then generates UNCORRDATA (Uncorrected Data). When there is a multi-track Drop-Out, no correction is performed.

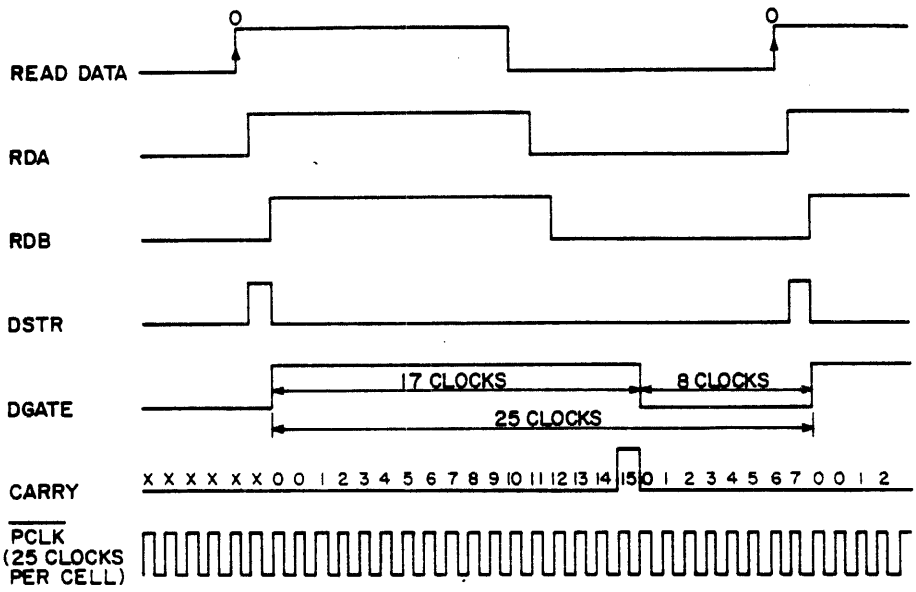

Figure 4-24. PE RECOVERY - DATA CELL TIMING

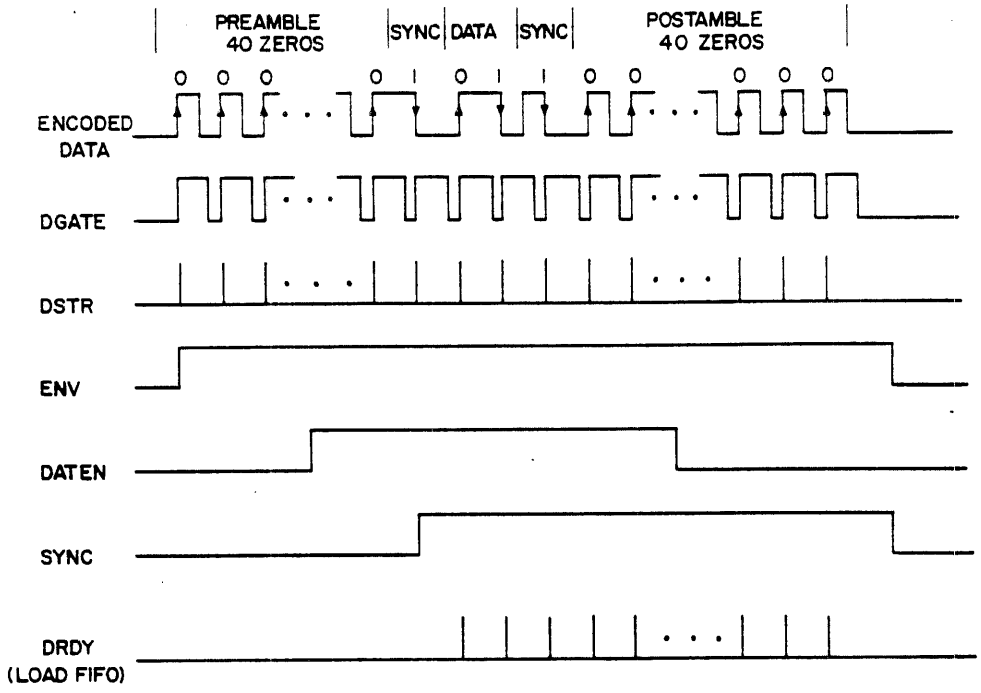

Figure 4-25. PE READ RECOVERY TIMING

POWER DRIVER PWA FUNCTIONAL DESCRIPTION

The Power Driver PWA is an electronic assembly consisting of two identical amplifiers capable of converting voltage error signals from the Servo Control Assembly PWA to proportional currents passing through two motors (TAKE-UP and FILE). The torques created provide the acceleration and tension to the connecting tape between the two motors. The operation of one amplifier is as follows:

The amplifier has an H-bridge voltage switcher driven by a Pulse Width Modulation (PWM) converter contained within a current feed-back loop. The resulting current is uninterrupted, but varying with an average value proportional to the input voltage, with a gain factor of 1 amp per volt. A soft dead-band of + 300 MV exists where the gain factor quickly approaches zero within this region of input.

An overall block diagram is shown in Figure 4-26. The signal flow proceeds from the differential error input through A with Unity Gain Summing, with the current feed-back voltage from B. The resulting difference is multiplied by five through C and compared to two triangle voltages by comparators D and E.

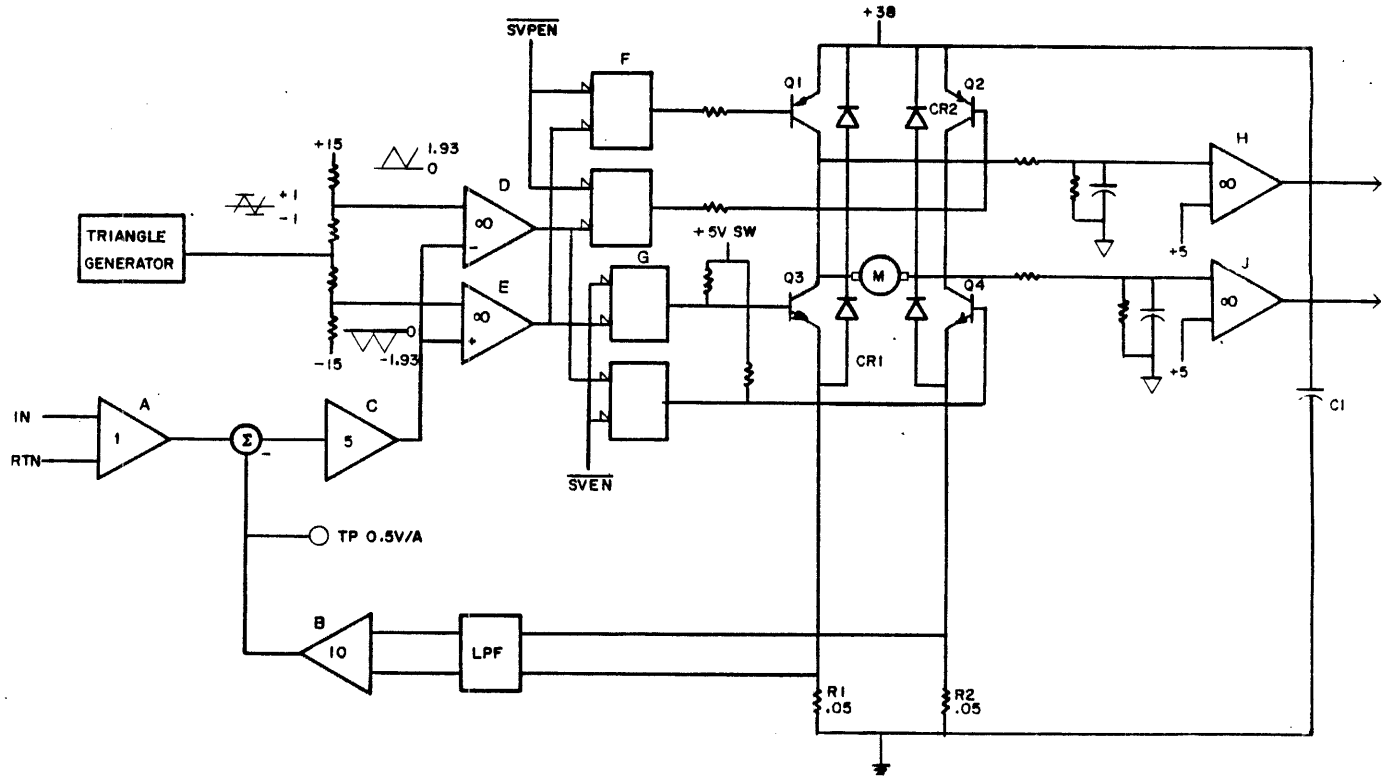

Figure 4-26 POWER DRIVER BLOCK DIAGRAM

These waveforms are shown in Figure 4-27. Two quadrants of input are shown to point out that only one of the negative-active outputs from D and E exists at any given time. The peripheral drivers F and G connect the PWM outputs from the comparators to the appropriate transistors Q1 through Q4. At this point, it can be seen how the enabling to the H-bridge is performed. The gating of SVPEN and SVEN allow diagnostic control. The SW5 signal (Switched +5 Volts) is applied as the source of drive to the lower bridge. It can be quickly removed during Power On and Off sequencing or during a high over-current condition.

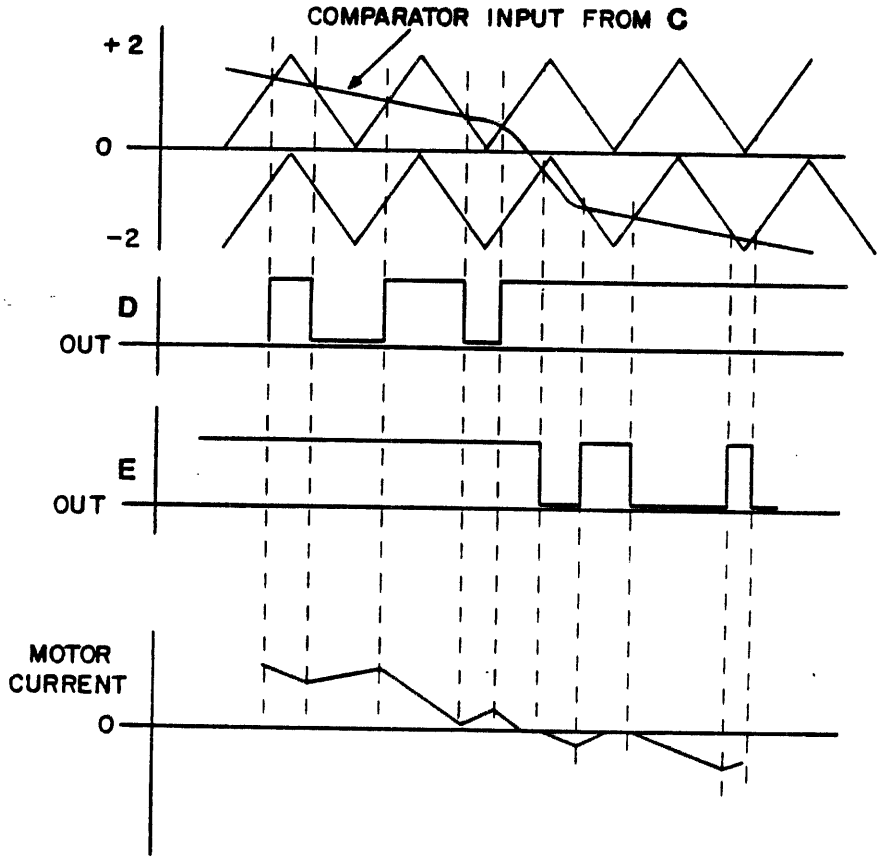

Figure 4-27. POWER DRIVER WAVEFORMS

Figure 4-28 shows a quadrant of the H-bridge and the states of current flow for a given DC input. In State 1, current is flowing in Q1 and Q4, 'charging' the motor. In State 2, the motor is 'discharging' through CR1 and CR2 and through CR3, thus charging C1. It should be noticed that the capacitor C1 is discharging during State 1. The capacitor is also charged by the power supply during State 2.

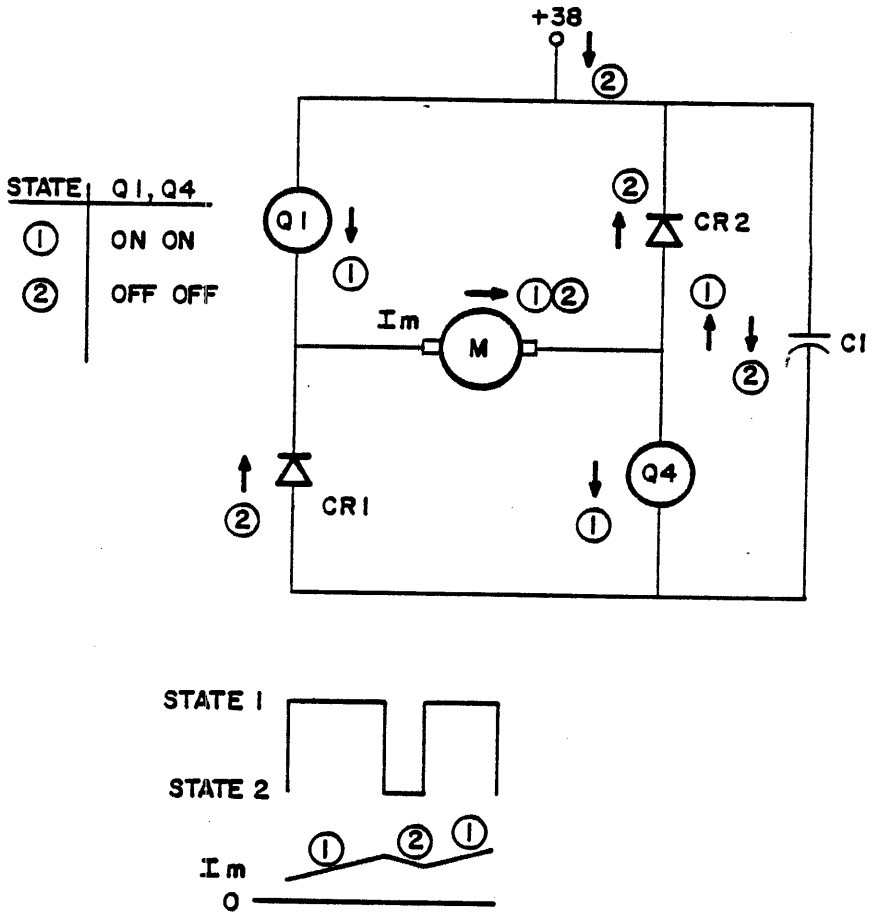

Figure 4-28. H-BRIDGE SWITCHING

A block diagram of the Switched 5-Volt line for biasing the lower stages of the H-bridge, and also the peripheral drivers for biasing the upper stage, is shown in Figure 4-29. The 5-volt shut-down is needed because the peripheral drivers become uncontrolled below 4 volts, thereby turning on both sides of the bridge in the presence of 38 volts. The Master Clear signal from the power supply and the 4.2 volt reference make use of comparator K for shut-down.

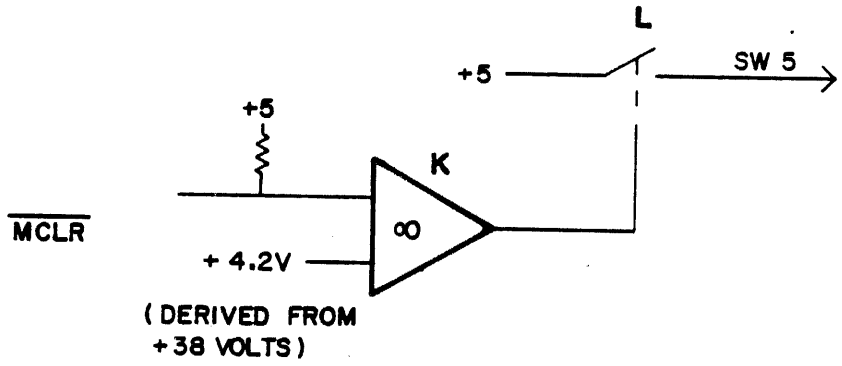

Figure 4-29. SWITCHED +5 VOLTS

HEAD ASSEMBLY OPERATION

Figure 1-2 in section 1 of the Hardware Reference/Maintenance Manual 49768900 shows the location of the head assembly with respect to other tape components. The read/write subsections of the head consist of nine individual write heads and nine individual read heads. The two sections are mounted in tandem in such a way that, when in forward motion, tape passes first under the write heads and then under the read heads. The width of a write is slightly wider than its corresponding read head, thus asserting that a read head will always scan within the track of its write head.

Individual read and write heads are configured of a wire-wound core placed to influence the magnetic field of an associated read or write gap cut into the assembly. During a write operation, the direction of current flow through a winding is established by the nature of the data pattern to be transcribed onto the tape. As current flows through the windings in a write head, a magnetic field is induced across the write gap. As tape passes into the influence of this field, the magnetic particles on the tape are aligned by the lines of flux across the write gap. When current flow through the coil windings is reversed due to data change, the magnetic particles on the tape are realigned in the opposite direction. As the tape passes under the read head, the direction in which the magnetic particles on the tape are aligned, is detected by the read head core. This electrical signal is amplified by the preamplifiers and is then transmitted to the formatter for processing.

An erase head is also included in the head mechanism. The erase head is energized by a current (DC) during a write operation. This action aligns all tape particles in the same direction prior to passing under the write head. Thus, all information is erased from a tape before new information is written. During a read operation, the erase head is turned off in order to preserve pre-recorded data.

A tape cleaner contacts the tape and removes all foreign particles from the tape prior to reaching the head assembly. Cleaner blades dislodge any foreign material on the tape, which is then removed from the tape path area by vacuum.

RECORDING TECHNIQUES AND FORMATS

Streaming tape transports read or transcribe data in the PE (phase) recording schemes. The following paragraphs provide a brief review of techniques and associated tape formats.

Tape Composition

Magnetic tape is constructed of a plastic base material that is coated on the recording side with a substance containing minute

iron oxide particles mixed with a binding agent. The recording surface thus is sensitive to the influence of electrically generated magnetic fields.

The magnetic recording technique employs a data-dependent current switching scheme to set he polarization pattern of individual write heads. Discrete segments of the magnetically sensitized tape, when passed through the magnetic field of an associated write head, are forced to assume a corresponding polarization pattern. During a read operation, the data-descriptive polarization patterns carried by the previously recorded tape influence the polarity of the electrical signals induced into the read head coils.

Phase Modulation - Technique and Format

The phase modulation method records "1" and "0" bits on tape by changing the direction of current through the write head. A change in current direction results in a corresponding change in direction of the magnetic flux in the write head. As tape passes under the write head, magnetic particles in the tape align with the direction of magnetic flux. Particles aligned in one direction represent a "1" bit, while particles aligned in the opposite direction represent a "0" bit.

When the erase head flux is positive, a change in write head flux from negative to positive records a "1" bit on tape (Figure 4-30). A flux change from positive to negative represents a "0" bit. When two "1's" are written in succession, the magnetic flux must return to the negative before the second "1" can be written. The flux must return to the positive state between two "0" bits. This flux transition (phase bit) between two identical data bits contains no information. The phase bit establishes the proper polarity if two identical bits ("1's" or "0's") are written in succession.

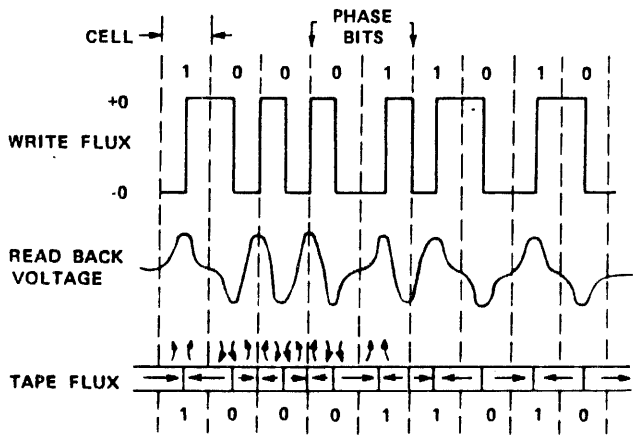

Figure 4-30. PE MODULATION RECORDING

A cell is the time needed to transfer one data bit of information. The TCU maintains a cell timing during encoding. Each data bit and phase bit requires one magnetic flux change. One inch of phase recorded tape contains 1600 data bits per track. The total number of flux changes per inch varies between 1600 and 3200, and depends on the pattern written.

The following characteristics describe the readback signal during phase modulation recording:

1. A positive pulse in the middle of a cell indicates a "1"; a negative pulse indicates a "0".

2. A positive pulse at the junction of two cells indicates that both cells contain "0". Conversely, a negative pulse at the junction indicates that both cells contain "1's".

3. The absence of a pulse at the junction of two cells indicates that the cell contains opposite binary bit values.

The identification burst shown in Figure 4-31 identifies the phase modulation method of recording information. The burst consists of alternate "1's" and "0's" (1600 flux changes per inch) written on track 4 only. During the burst, all other tracks are erased. A minimum gap of 0.5 inch must exist between the burst and the first block of data.

Phase Modulation Character Configuration

Data is recorded on the 9 tracks in Figure 4-31. Track 1 is the track closest to the operator; the remaining 8 tracks are numbered consecutively from 2 to 9. Track 4 is used to check character parity on information in the other 8 tracks. If an even number of "1's" is written in the 8 information tracks, a "1" will be written in track 4 to give an odd parity check. If an odd number of "1's" is written in the 8 information tracks, a "0" will be written in track 4.

A data block consists of a preamble, data and a postamble as shown in Figure 4-31. The preamble identifies the beginning of a block and consists of 41 characters. The first 40 characters are "0's" in all tracks and the last character is a "1" in all tracks. The postamble idenfifies the end of a data block. It consists of 41 characters which are a mirror image of the preamble; that is, the first character is a "1" in all tracks and the last 40 characters are "0's" in all tracks. The postamble also identifies the data block when performing a Reverse Read operation.

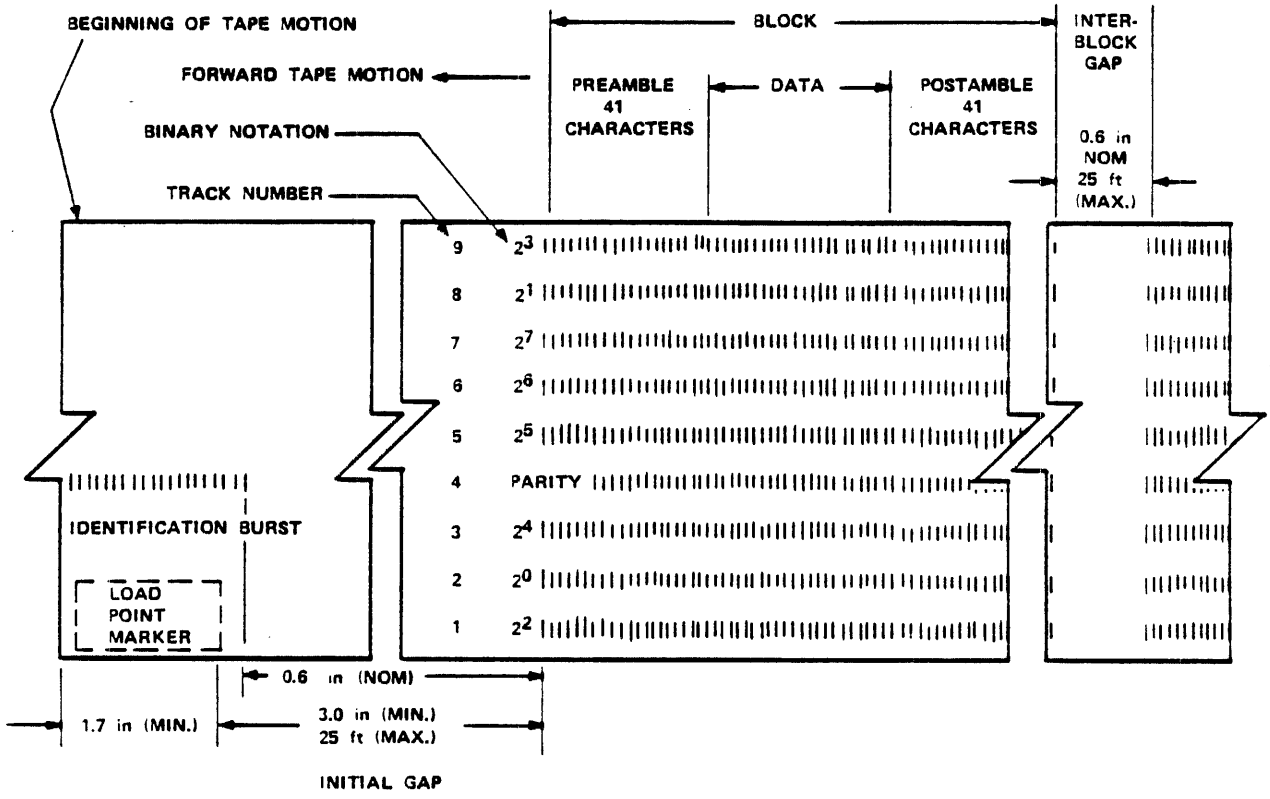

NOTE:
1. OXIDE SIDE UP ON DIAGRAM RECORDING HEAD ON SAME SIDE AS OXIDE.

Figure 4-31. PHASE ENCODED TAPE FORMAT

STU/ADAPTER INTERFACE

ELECTRICAL INTERFACE

All lines are low true and driven by 2-state devices, type SN7438. These lines are received by the circuit shown in Figure 4-32. The following voltage levels apply:

	Transmitted	Received
True = 0	0.0V - 0.4V	0.0V - 0.8V
False = 1	2.4V - 5.0V	2.0V - 5.0V

MECHANICAL INTERFACE

Connector Requirements

The connectors for this interface are two 50-pin printed circuit edge connectors:

- o 50-Pin Connector CDC P/N 95966510 (AMP 88373-1 or equivalent)
- o Keying Plug CDC P/N 95966560 (AMP 88113-1 or equivalent)

I/O Cabling Requirement

Two 50-pin flat signal cables are used to interface the STU with the controller/adapter.

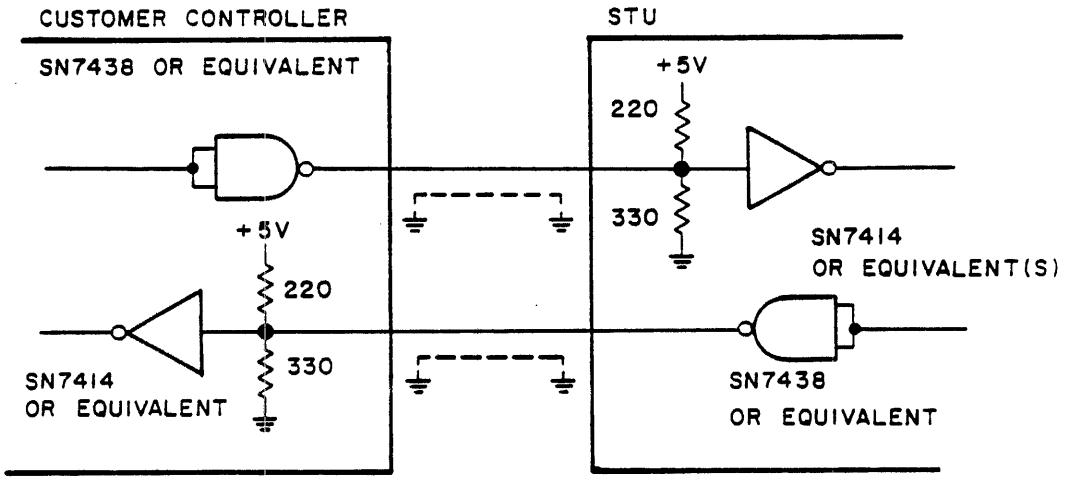

Figure 4-32. INTERFACE CONFIGURATION

CONNECTOR PIN CONFIGURATION

CONNECTOR	SIGNAL PIN	RETURN PIN	SIGNAL
J4	2	1	-FFBY
|	4	3	-FLWD
|	6	5	-FWD4
|	8	7	-FGO
|	10	9	-FWD0
|	12	11	-FWD1
|	14	13	Spare
|	16	15	-FLOL
|	18	17	-FREV
|	20	19	-FREW
|	22	21.	-FWDP
|	24	23	-FWD7
|	26	25	-FWD3
|	28	27	-FWD6
|	30	29	-FWD2
|	32	31	-FWD5
|	34	33	-FWRT
|	36	35	-FLGAP
|	38	37	-FEDIT
|	40	39	-FERASE
|	42	41	-FWFM
|	44	43	Spare
|	46	45	-FTAD0
|	48	47	-FRD2
J4	50	49	-FRD3

The prefix "F" denotes Formatter Interface Signals.

CONNECTOR PIN CONFIGURATION (Cont'd)

CONNECTOR	SIGNAL PIN	RETURN PIN	SIGNAL
J5	1	5	-FRDP
|	2	5	-FRD0
|	3	5	-FRD1
|	4	5	-FLDP
|	6	5	-FRD4
|	8	7	-FRD7
|	10	9	-FRD6
|	12	11	-FHER
|	14	13	-FFMK
|	16	15	-FID
|	18	17	-FFEN
|	20	19	-FRD5
|	22	21	-FEOT
|	24	23	-FOFL
|	26	25	Spare
|	28	27	-FRDY
|	30	29	-FRWD
|	32	31	-FFPT
|	34	33	-FRSTR
|	36	35	-FDWDS
|	38	37	-FDBY
|	40	39	-FHSPD
|	42	41	-FCER
|	44	43	-FONL
|	46	45	-FTAD1
|	48	47	-FFAD
J5	50	49	-FHISP

The prefix "F" denotes Formatter Interface Signals.

INTERFACE REQUIREMENTS

The STU Interface is designed to accommodate the subsystem configurations shown in Figure 4-33. The STU Interface is based upon the Industry Standard Interface for 1/2 inch tape products. Modifications to this standard interface are required to accommodate the STU. The modifications are in the form of expansion to accommodate streaming mode operations and increased functionality, as well as deletions of unused functions. More specifically, the following additional capability is provided:

- o Streaming Mode Operations

  High Speed Select and Status Lines required for setting start/stop or streaming modes and identifying motion states.

- o Gap Length Controls

  Establish normal (0.6 inch nominal) or long (1.2 inch nominal) Interblock Gap (IBG). Optional gap lengths in the short and long gap are selectable via change to printed circuit board. The short gap is fixed at 0.6 inch or variable 0.6 to 0.9 inch. The long gap is fixed at 1.2 inches or variable 0.6 to 1.2 inches. The STU is shipped with the gaps selected in the fixed modes.

- o Sense Transfer

  Allows for the transfer of STU sense information.

- o STU Interface Loopback

  Allows for the looping of write to read lines on the STU Interface.

The deletions consist of removing the functions of density selection (NRZI/PE) and clip level threshold selection (performed automatically in the STU).

Minimum System Configuration

The minimum system configuration, as shown in Figure 4-33, provides for a single tape unit. Terminators for the Channel I/O are installed on the formatter board. The maximum cable length to the controller is 20 feet.

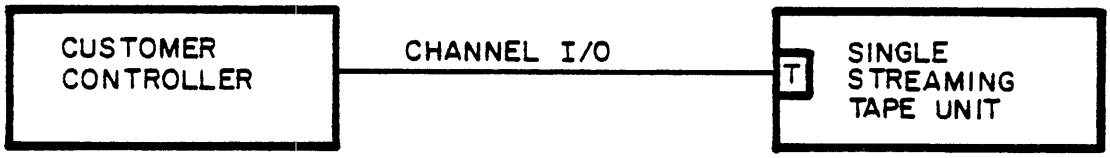

Figure 4-33. MINIMUM SYSTEM CONFIGURATION

Maximum System Configuration

Figure 4-34 shows the maximum system configuration consisting of four tape units daisy-chained together. Only the last tape unit will have terminators installed in the formatter board and intermediate units should have their factory installed terminators removed. The maximum total cable length to the controller is 20 feet.

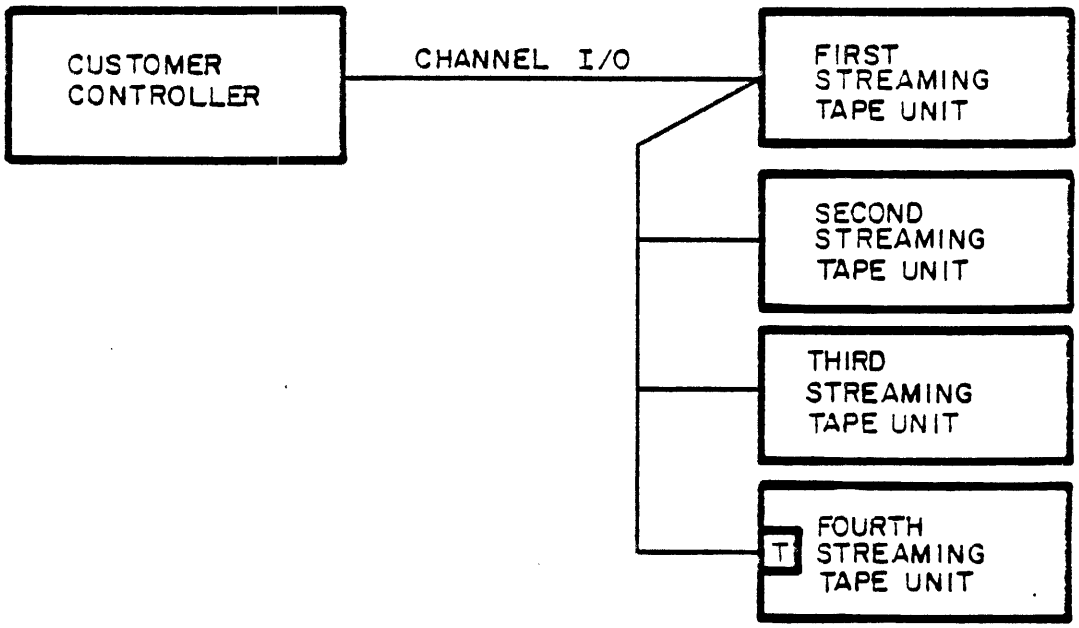

Figure 4-34. MAXIMUM SYSTEM CONFIGURATION

Addressing

The STU monitors the interface signals -FFAD, -FTAD0 and -FTAD1 and compares them to levels predetermined by switch settings on the unit(s) PWA. Hence, one of the four STU's daisy-chained on the STU interface may be selected. The appropriate levels must be maintained for the duration of an operation.

Mode of Operation

The STU operates in either start/stop mode or streaming mode.

- Start/Stop Mode

  The STU operates similar to conventional tape transports. It accelerates the tape when a command is received and stops the tape within the Interblock Gap (IBG).

- Streaming Mode

  Tape motion continues without loss of time due to starting and stopping, if the next command is received during the command reinstruct time. The STU maintains 100 ips speed through the IBG, anticipating the next command. If a command is received within the reinstruct time, there is no loss of time due to starting and stopping. If commands arrive after command reinstruct time or are discontinued, the tape unit will go through a recovery cycle.

Command Set

- Write Command

  This command causes the STU to accelerate tape and start transferring data. The data transfer continues until the Last Word command is given from the controller. The STU continues to move tape to perform read-after-write check.

  In the start/stop mode, the STU decelerates tape after each block. The next command will not be executed until the STU has completed its stop.

  In the streaming mode, if the following Write command is received during reinstruct time (see Table 4-4), the STU will continue the tape motion and write the next block. Otherwise, the STU will decelerate the tape. If the Write command is received after reinstruct time, the command will not be executed until STU has completed its recovery cycle.

- Write File Mark Command

  This command causes the STU to start the tape and write the proper file mark pattern on the tape.

- Erase Commands

  1. Fixed Erase - This command causes a 3.6 inch length of tape to be erased. The ID burst will be written when an Erase command is given from BOT.

  2. Controlled Erase - This command causes the STU to accelerate the tape and erase tape continuously until the "Last Word" signal from the controller is set true. This terminates the erase operation. The ID burst will be written when an Erase command is given from BOT.

  3. Data Security Erase - This command causes the STU to erase tape at 100 IPS from its present position to a position approximately 10 feet past End of Tape marker. The ID burst will be written when command is given from BOT.

- Read Forward Command

  This command causes tape to be accelerated to normal operating speed. The STU reads the next logical record of data encountered.

  If the STU has not detected data after 25 feet of tape motion, it will terminate the operation by decelerating the tape and resetting Formatter Busy status. An error condition will be set as a result of the time-out. File Mark testing is performed during read operation.

  In start/stop mode, the STU decelerates tape after each block. The next command will not be executed until the stop is completed.

  In streaming mode, if the following Read command is received during the reinstruct time, the STU will continue tape motion and read the next block of data. Otherwise, the STU will decelerate the tape. If the Read command is received after the reinstruct time, the command will not be executed until the recovery cycle is completed.

- Read Reverse Command

  Similar to Read Forward, but with tape motion in the reverse direction. Consecutive records may be read in reverse "on-the-fly". The STU will stop tape motion and set low speed mode when the BOT signal is present during any reverse operation.

- Space Forward Command

  This operation is similar to a Read Forward except that no read strobe signals are generated and no read data is supplied to the controller. Error checking is not performed on the read data. However, File Mark testing is performed.

- Space Reverse Command

  This operation is similar to the Space Forward operation except that the STU moves tape in the reverse direction.

- File Mark Search Commands

  These commands cause the STU to continuously Read Forward or Read Reverse in "on-the-fly" mode. Tape motion ceases when a File Mark is read with the head correctly positioned. When combined with a Space command, data transfer and error detection is inhibited.

- Rewind Command

  This command causes the selected STU to rewind to BOT. The tape unit defaults to start/stop mode after Rewind. The command is ignored if the unit is already at BOT.

- Off-Line Command

  This command causes the selected STU to go Off-Line, Rewind and Unload tape.

- On-Line Command

  This command causes the selected STU to go On-Line if tape is loaded.

- High Speed Select Command

  When received with a Read or Write-type command, this command causes STU to change from start/stop to streaming mode before executing Read or Write-type command. This command may delay first Read or Write command by 640 milliseconds.

- Long Gap Command

  When received with a Write-type command, this command causes the STU to be set for Long Gap (see Table 4-4) in streaming mode. In start/stop mode, the gap will be 1.2 inches. When received with a Read command in start/stop mode, the Long Gap command will be ignored.

- Channel Loopback Command

  This is a diagnostic command used to loopback the STU Interface write data lines to read data lines. The STU generates Demand Write Data Strobes and loops back the write data from the STU Interface to the read data lines until the Last Word signal is received. The Formatter Busy and Data Busy signals are reset when the last data byte is transmitted. The data transfer rate is at the present transport speed.

- Sense Read Command

  This command transfers STU sense information to the controller. The sense transfer is similar to a read operation at low speed of a fixed length record except that no tape motion is involved. The STU generates a read strobe for every sense byte transferred. Eight (8) bytes of sense information are transferred (refer to Table 4-2). The STU need not be on-line (but must be selected) to execute a Sense Read command.

- Controlled Backspace Command

  This command causes the STU to accelerate the tape in the reverse direction and start issuing Demand Write Data Strobes. The STU has no maximum restrictions on the space length. The Demand Write Data Strobes continue at the data rate until the Last Word command is given from the controller. Tape motion will continue until an IBG is detected. This will terminate the operation. No read data is sent to the controller and no error checking is performed. File Mark testing is not performed for this operation. This operation is similar to a write operation except that no data is recorded on tape.

STATUS AND SENSE INFORMATION

Status Information

The status bits are set when their respective setting condition occurs. The setting conditions are detailed as follows in this section. The STU need not be on-line (but must be selected) to transfer the sense bits.

- Formatter Busy

  When a command is transferred to the Formatter, this signal goes active on the trailing edge of FGO and is reset when the Formatter has completed the last Go command.

- ID Burst Detect

  This line is pulsed if the identification burst on the tape is detected when the tape operation is a read or a read-after-write from BOT.

- Hard Error

  1. This line is set as the result of one of the following conditions being detected during execution of a command:

     - Vertical Parity Error without associated drop-out
     - False Preamble Detection
     - False Postamble Detection
     - Excess Skew
     - Multi-track Error
     - Parity Error on channel interface
     - Identification Error on read-after-write
     - Noise Error
     - Equipment Check
     - Read Time-out
     - Device Sense Error
     - Loop Write-to-Read Error
     - Illegal Command
     - Reverse into Load Point
     - Single Track Correction on Write Command

  2. Should the error condition be detected while FDBY is set, then FHER is pulsed with a minimum pulse of 10 us. If FDBY is not set, then FHER is set and will be reset on receipt of the next GO command or when Formatter Enable is reset.

- Corrected Error

  This line is pulsed while FDBY is set when single track error correction is performed during execution of a Read command.

- File Mark

  1. This line is pulsed during any Read/Write type command when a File Mark pattern is detected.

- On-Line

  1. Set when the selected transport is placed On-Line by the operator or On-Line command and tape is loaded.

  2. Reset at the successful initiation of the Off-Line command or any time that the transport goes Off-Line.

- Rewind

  1. Set when a Rewind or Off-Line command is issued to the selected transport.

  2. Reset when the transport has completed the operation.

- File Protect

  A signal which, when true, indicates that a tape without a write enable ring is mounted on the selected transport.

- Load Point

  1. Set when the tape is located with its Load Point over the BOT sensor in the start/stop mode.

  2. When in streaming mode at Load Point, the BOT marker will not be under the sensor, but Load Point status will still be set.

  3. Reset when the Load Point marker moves off the BOT sensor in the forward direction.

  4. The streaming mode recovery cycle will not effect the status of Load Point.

- End-of-Tape

  1. Set and latched when the selected transport has detected the End-of-Tape marker in the forward direction.

  2. The streaming mode recovery cycle will not affect the status of the EOT.

  3. Reset when passing over trailing edge of EOT in reverse direction, other than a streaming mode recovery cycle.

- High Speed

  Set to indicate that the selected transport is in high speed streaming mode.

- Data Busy

  True during the active execution of all commands initiated by FGO. No new command may be given while Data Busy is true.

- Ready

  STU is loaded and ready to accept On-Line or Sense commands.

Sense Data

The STU has 8 bytes of sense data available to the system upon command request (Sense Data Transfer). Table 4-2 presents a summary of STU sense byte definition. A more detailed description of STU sense data is as follows:

- Sense Byte 0

  7 - Unit Exception
  - Set when single track error correction is performed during read operation.

  6 - Unit Check
  - Set when Bit 0, 1, 2, 3, 4 or 5 of this sense byte is set.

  5 - Command Overrun
  - Set if command is received while Data Data is true (also sets sense byte 0 bit 0).

  4 - Data Check
  - Set when Postamble Error is detected.
  - Excessive skew is detected.
  - When PE ID Burst is not correctly recorded while writing from BOT.
  - When PE ID Burst is not detected while reading from BOT.
  - When noise is detected during read-after-write check on Erase command.
  - When Multi-drop is detected.
  - When no data is detected (Read Time-out Error).
  - When readback data does not occur when expected on Write Tape Mark command, or tape mark is not written correctly during Write Tape Mark command.
  - Uncorrectable parity errors are detected.
  - One track in error during write operation.

  3 - Equipment Check
  - Set when internal hardware malfunctions are detected.
  - Write Transfer Check.
  - Parity error is detected on channel in data.
  - Gap Control is not detected within defined window.
  - Positioning is not detected within defined window.

  2 - 0

  1 - Intervention Required.
  - Set when STU is not Ready.

- Sense Byte 1 (Last Command Issued)

  7 - Long Gap
  6 - Undefined
  5 - High Speed Select
  4 - Erase
  3 - Write File Mark
  2 - Edit
  1 - Write
  0 - Reverse

- Sense Byte 2 (Tape Status)

  7 - EOT
  6 - BOT
  5 - High Speed
  4 - Positioning/Ramp
  3 - File Protected
  2 - Rewinding
  1 - On-Line
  0 - Ready

- Sense Byte 3

  7 - Gap Control - Set when there is a Hardware Failure. This condition also sets sense byte 0 bit 3 (Equipment Check).

  6 - Write Hardware Check - Set when there is a Hardware Failure. This condition also sets sense byte 0 bit 3 (Equipment Check).

  5 - Channel In PE - Set when parity error is detected on data received from channel. This condition also sets sense byte 0 bit 3 (Equipment Check). Addition of a jumper negates this status and causes correct parity to be generated. However, if STU generates parity, there will not be any integrity checking of data lines from channel, any channel data error will be written onto tape as an undetected write error.

  4 - Position Check - Set when there is a Hardware Failure. This condition also sets sense byte 0 bit 3 (Equipment Check).

  3 - Device Response Check - Set when communication error has occurred between the two STU microprocessors.

2 - 0

1 - Illegal Command - Set when Illegal Command Sequence is detected, for example: a Read Reverse command is decoded with tape unit at BOT or decoded command has Write and Reverse bits set. This condition also sets sense byte 0 bit 7 (Command Reject).

0 - File Mark Detected - Set when a tape mark is detected during a Read or Space command.

o Sense Byte 4

7 - TIE 4 - Track In Error 4.

6 - No Track Pointer - Set when parity error is detected with no pointer set. This condition also sets sense byte 0 bit 4 (Data Check).

5 - Multi-drop - Set when a Multi-drop (more than one pointer) is detected. Data is not correctable. This condition also sets sense byte 0 bit 4 (Data Check).

4 - Postamble Error - Set when Postamble error is detected. This condition also sets sense byte 0 bit 4 (Data Check).

3 - Uncorrectable Data - Parity error that cannot be corrected. Error has no pointer or more than one pointer.

2 - PE ID Check - Set when PE ID is not correctly recorded while writing from BOT, or PE ID is not detected while reading from BOT. This condition also sets sense byte 0 bit 4 (Data Check).

1 - Noise - Set when noise is detected during read-after-write check on Erase command, or IBG is not detected at End of Record. These conditions also set sense byte 0 bit 4 (Data Check).

0 - Time-out - Set when no data is detected within 25 feet of tape. This condition also sets sense byte 0 bit 4 (Data Check).

o Sense Byte 5

These bits indicate the tracks for which pointers are on at the end of the last operation.

7 - TIE 2	- Track In Error 2	
6 - TIE 8	|	8
5 - TIE 1	|	1
4 - TIE 9	|	9
3 - TIE 3	|	3
2 - TIE 5	|	5
1 - TIE 6	|	6
0 - TIE 7	- Track In Error 7	

o Sense Byte 6

- Fault Symptom Code - Fault Code Representation for internally detected failure mode

o Sense Byte 7 - Marginal Device Indication

	12.5 ips	25 ips	
7 - 0		Low Speed Slow Down Ramp Fault	Support Level Interpretation Only
6 - 0		Low Speed Slow Up Ramp Fault	|
5 - Low Speed			|
4 - High Speed			|
3 - Low Speed Down Ramp			|
2 - High Speed Down Ramp			|
1 - Low Speed Up Ramp			|
0 - High Speed Up Ramp			Support Level Interpretation Only

Table 4-2. STU SENSE BYTE SUMMARY

SENSE BYTE	MSB BIT 0	BIT 1	BIT 2	BIT 3	BIT 4	BIT 5	BIT 6	LSB BIT 7
0	Command Reject	Inter-vention Required	0	Equipment Check	Data Check	Over-run	Unit Check	Unit Exception
1	Reverse	Write	Edit	Write File Mark	Erase	Hi Speed Select		Long Gap
2	Ready	On-Line	Rewind	File Protect	Position-ing Ramp	High Speed	BOT	EOT
3	File Mark Detect	Illegal Command	12.5 ips 0 -------- 25 ips Checksum Check	Device Response Check	Position-ing Check	Channel In Parity Error	Write Hardware Check	Gap Control Check
4	Read Time-out	Noise Check	PE ID Check	Uncorrec-table Data	Postamble Error	Multi-drop	No Track Pointer	TIE 4
5	TIE 7	TIE 6	TIE 5	TIE 3	TIE 9	TIE 1	TIE 8	TIE 2
6				FAULT SYMPTOM CODE				
7	High Speed Up Ramp MDI	Low Speed Fast Up Ramp MDI	High Speed Down Ramp MDI	Low Speed Fast Down Ramp MDI	High Speed MDI	Low Speed MDI	Low Speed Slow Up Ramp Fault	Low Speed Slow Down Ramp Fault

SIGNAL DESCRIPTION

All STU interface lines are defined low-true.

Lines To The STU

- -FFAD: Formatter Address

  This line must correspond to the address switch setting.

- -FTAD0, -FTAD1: Transport Address

  These lines must correspond to the address switch setting.

- -FGO: Initiate Command

  This signal is used to strobe the following command lines on the trailing edge:

  1. FREV
  2. FWRT
  3. FWFM
  4. FERASE
  5. FEDIT
  6. FLGAP
  7. FHISP

- -FREV: Reverse/Forward

  This signal is used to encode Go commands. See Table 4.3.

- -FWRT: Write/Read

  This signal is used to encode Go commands. See Table 4.3.

- -FWFM: Write File Mark

  This signal is used to encode Go commands. See Table 4.3.

- -FERASE: Erase

  This signal is used to encode Go commands. See Table 4.3

- -FEDIT: Edit

  This signal is used to encode Go commands. See Table 4.3 (Note: Edit commands are not supported by the STU.).

- -FLGAP: Long Gap

  When true, this line causes the STU to be set up for 1.2 inch gap. When false, will select the normal 0.6 inch gap.

- -FHISP: High Speed Select

  If this line is true when Read or Write command is issued, the STU will read or write at high speed. If the line is false, the STU will read or write low speed. Should unit be in opposite speed mode when command is issued, the STU will first change speed with a delay of up to 640 milliseconds and then execute the command at the desired speed.

- -FREW: Rewind

  This signal (minimum 1.0 microsecond pulse) causes the selected transport to rewind to BOT. The -FRWD signal is asserted during the Rewind operation. Formatter Busy is not set during a Rewind.

- -FOFL: Off-Line and Rewind

  This line must be held true for a minimum of 1.0 microsecond. It causes the STU to go Off-Line, Rewind and Unload the tape. Formatter Busy is not set.

- -FLOL: On-Line

  This signal causes the selected STU to go On-Line. It must be held true for a minimum of 1.0 microsecond. Formatter Busy is not set.

- -FWD0-7, -FWDP

  These lines transmit data to the STU. -FWD0 is the most significant.

- -FFEN: Formatter Enable

  This signal, when false, causes the formatter to be held in an initialized state. It is independent of -FFAD. Resetting Formatter Enable may be used to terminate run-away operations caused by missing last word.

- -FLWD: Last Word

  During Write and Controlled Erase, this line, when true with -FWD0-7, -FWDP, indicates that the character being strobed into the Formatter is the last of the record.

Table 4-3 presents a correspondence between the signal lines strobed by the -FGO line and the command to be executed.

Table 4-3. STU INTERFACE COMMANDS

COMMAND	EDIT	REV	WRT	WFM	ERASE
Read Forward *	L	L	L	L	L
Read Reverse *	L	H	L	L	L
Write *	L	L	H	L	L
Write File Mark	L	L	H	H	L
Erase (Variable)	L	L	H	L	H
Erase (Fixed)	L	L	H	H	H
Data Security Erase	H	L	H	H	H
Space Forward	L	L	L	L	H
Space Reverse	L	H	L	L	H
Controlled Backspace	L	H	H	L	H
File Search Forward	L	L	L	H	L
File Search Reverse	L	H	L	H	L
File Search Forward (Ignore Data)	L	L	L	H	H
File Search Reverse (Ignore Data)	L	H	L	H	H
Read Sense	H	H	L	L	H
Data Loopback	H	H	H	H	H

L = Low = False
H = High = True

* FLGAP is also strobed during these command transfers, indicating the setting of a Long or Normal Gap Length (1.2 inch or 0.6 inch IBG nominal respectively). See Table 4-4.

Lines From The STU

- -FFBY: Formatter Busy

  Only goes true when -FGO command is received. Remains true until completion of command execution.

- -FDBY: Data Busy

  Goes true during active execution of all commands initiated by -FGO. When searching file marks, Data Busy will go true during each record. A new command may be given when Data Busy goes false for an "on-the-fly" operation. "On-the-fly" commands must be the same read/write mode and same tape direction. All other commands are accepted by the STU after Data Busy goes false, but will not be executed until the previous command is completed.

- -FID: PE Identification Burst Detected

- -FHER: Hard Error

  This line is set low if any error has been detected. Should the error be detected while FDBY is set, then FHER is pulsed with a minimum pulse of 10 us. If FDBY is not set, then FHER is set and will be reset on receipt of the next Go command or when Formatter Enable is reset.

- -FCER: Corrected Error

  This line is pulsed while FDBY is set when single track error correction is performed during the execution of a Read command. Minimum pulse width is 10 us.

- -FFMK: File Mark Detected

  This line is pulsed while FDBY is set during any Read/Write type command when a File Mark pattern is detected.

- -FRDY: STU Ready

  This line, when true, indicates that unit is loaded. The Ready line will go false during a Rewind.

- -FONL: STU On-Line

- -FRWD: Rewind

  This line, when true, indicates that a Rewind is being executed.

- -FEOT: End-of-Tape

- -FFPT: File Protect

- -FLDP: Load Point

- -FHSPD: High Speed

  When true, indicates selected STU is in the streaming mode, high speed. When false, it indicates start/stop mode, low speed.

- -FDWDS: Demand Write Data Strobe

  This line consists of a pulse for each character to be written onto tape. The pulse width of signal -FDWDS is equal to 1/2 of the data rate. The first data character should be available on the write data input lines within 40 character periods after the -FDBY signal has been set true, and remain true until the trailing edge of the first -FDWDS signal.

  Succeeding characters must then be placed on these lines within one-half of a character period after the trailing edge of each -FDWDS signal. During a Write File Mark command, the required File Mark pattern is generated internally by the Formatter and the -FDWDS signal is not used. During erase operation (variable length), this line will also be used. However, no data are transferred or written onto tape. The controller may use this line to determine the length of tape to be erased.

- -FRSTR: Read Data Strobe

  This line consists of a pulse for each character of read information to be transmitted to the customer controller interface and should be used to sample the read data lines -FRD0-7, -FRDP. The pulse width of this signal is a minimum of 1 usec. The average time between pulses on the -FRSTR line is given by:

  $$\frac{1}{S \times D}$$ Where S = Tape Speed (ips) and D = 1600 bpi

  The customer controller interface must be able to accept the whole block of data at the specified data rate.

  Due to bit crowding, tape speed variation and signal drop-out correction (PE), the customer controller interface must be able to receive characters at a rate which can vary between twice the nominal rate and half the nominal rate.

- -FRD0-7, -FRDP: Read Data

  These 9 lines transmit read data from the Formatter to the customer controller. Each character read from tape is available by sampling these lines in parallel with the -FRSTR. Data will be placed on the read data lines at least 0.5 usec prior to the leading edge of the -FRSTR pulse. The data remains on the read data lines for at least 0.5 usec after the trailing edge of the -FRSTR pulse. Sense data is also transmitted on this bus analogous to the read data rate at low speed.

SYSTEM AND TIMING CONSIDERATIONS

MOTION CHARACTERISTICS

The transport has two operational modes: start/stop and streaming modes. Selection of either mode is made at the transport interface with start/stop being the default mode. Also, following a rewind operation, the transport automatically reverts to the start/stop mode.

In the ensuing discussions, read operations represent all read-type operations such as read, space and search. Similarly, write operations represent all write-type operations such as write data, erase and write file mark.

At 100 ips, all models perform only in the streaming mode. The 25 ips model performs in start/stop and streaming modes at 25 ips.

Start/Stop Mode

In the start/stop mode, the transport operates similar to a conventional 1/2 inch tape unit. It accelerates the tape when a command is received and stops tape within the IBG. A long IBG of 1.2 inch nominal may be commanded as well as the normal or 0.6 inch nominal IBG. Figure 4-35 illustrates start/stop mode motion characteristics. The figure is drawn so that points A thru E represent the position of the read head for read operations and the write head for write operations.

- Read Operations - 25 ips Unit Only

  After a block has been successfully traversed, the tape will be brought to a complete stop to await the next command. The microprocessor will delay the subsequent start if the time, since the last start, is less than 80 ms.

- Write Operations - 25 IPS Unit Only

  Tape control is exactly the same as in the read; the 80 ms restriction also applies. Note that the normal IBG written in this mode is 0.8 inch.

Table 4-4. MOTION CHARACTERISTICS (25 IPS UNIT ONLY)

Start/Stop Distance (Nominal)	
Low Speed Start/Stop Mode	0.25 inches
Low Speed Streaming Mode	0.5 inches
High Speed Streaming Mode	8.0 inches
Data Transfer Rate (Avg. Over Block)	
Low Speed Modes	40 kilobytes/second
High Speed Mode	160 kilobytes/second
Write Interblock Gap Size	
1. Short Gap	
a. Low Speed Start/Stop Mode	0.8 inches nominal
b. Low Speed Streaming Mode	0.6 inches nominal, 0.8 inches max. (NOTE 6)
c. High Speed Streaming Mode	0.6 inches nominal
2. Long Gap	
a. All Modes	1.2 inches nominal
3. Variable Short Gap	
a. High Speed Streaming Mode	0.6 to 0.9 inch (NOTE 1)
4. Variable Long Gap	
a. High Speed Streaming Mode	0.6 to 1.2 inch (NOTE 1)
Read Interblock Gap Size	
Minimum - All Modes	0.5 inches (NOTE 7)
Maximum - Streaming Mode	1.2 inches (NOTE 8)
Write Access Time (Nominal)	
Low Speed Start/Stop Mode	22 millisecs (NOTE 9)
Low Speed Streaming Mode	70 millisecs
High Speed Streaming Mode	175 millisecs
Read Access Time (Nominal)	
Low Speed Start/Stop Mode	24 millisecs (NOTE 9)
Low Speed Streaming Mode	66 millisecs
High Speed Streaming Mode	175 millisecs
Reposition Time (nominal, NOTE 2)	
Low Speed Streaming Mode	221 millisecs
High Speed Streaming Mode	670 millisecs
Position Time (nominal, NOTE 3)	
Low Speed Streaming Mode	155 millisecs
High Speed Streaming Mode	495 millisecs

Table 4-4. MOTION CHARACTERISTICS (Cont'd)

Reinstruct Time (Nominal, NOTE 4)	
1. Low Speed Streaming Mode	
a. Write (Short Gap)	14 ms for 0.6 inch gap, 22 ms for 0.8 inch (NOTE 6)
b. Read (Short Gap)	20 ms for 0.5 inch gap, 24 ms for 0.6 inch
c. Write (Long Gap)	38 ms
d. Read (Long Gap)	48 ms
2. High Speed Streaming Mode	
a. Write (Normal Gap)	3.5 millisecs
b. Write (Variable Short Gap, NOTE 5)	6.5 millisecs
c. Write (Long Gap)	9.5 millisecs
d. Write (Variable Long Gap, NOTE 5)	9.5 millisecs
e. Read (Normal Gap)	12.0 millisecs
f. Read (Variable Short Gap, NOTE 5)	12.0 millisecs
g. Read (Long Gap)	12.0 millisecs
h. Read (Variable Long Gap, NOTE 5)	12.0 millisecs
3. Start/Stop (25 ips)	
a. Write	0 millisecs (NOTE 10)
b. Read	0 millisecs (NOTE 10)

NOTE 1: The transport, in high speed streaming mode write operation has optional record gaps selected on a printed circuit board. In the short gap mode the record gap will either be fixed at .6 inches or variable .6 to .9 inches. In the long gap mode the record gap will be fixed at 1.2 inches or variable .6 to 1.2 inches. The transport will be shipped with the settings in fixed modes.

NOTE 2: This is the total time required for accessing first byte of data for a command received immediately after command reinstruct time.

NOTE 3: This is the total time required to recover from a command over-run and return to stopped condition to await next operation.

NOTE 4: This is the total elapsed time from completion of a command execution to the latest point in inter-record gap, at which the transport can accept another command without a recovery cycle.

NOTE 5: The transport in high speed streaming mode has optional record gap lengths. The reinstruct times reflect for a Write reflect a 0.6 inch normal gap, or a 0.9 inch variable gap, or a 1.2 inch variable or fixed long gap. During a Read, the reinstruct times reflect the long gap. If a block is detected before the command is received, the transport will Reposition. If the command is received before the next block is detected, the transport will read the next record without Reposition. The maximum reinstruct time during a Read operation is 12 milliseconds.

NOTE 6: The transport automatically switches from low speed streaming mode to low speed start/stop mode when the host system cannot maintain the unit effectively streaming. Since the write gap in start/stop mode is nominally 0.8 inches, the unit will automatically extend IBG to 0.8 inches in streaming mode so as to avoid unnecessary throughput degradation. To keep the unit streaming, the system must reinstruct within 22 ms (0.8 inch gap)and, if reinstruct occurs within 14 ms, a 0.6 inch gap will be written; between 14 ms and 22 ms gaps greater than 0.6 inches and less than 0.8 inches will be written (see section 8.4).

NOTE 7: Unit will read minimum ANSI gaps in all modes.

NOTE 8: In streaming modes, the unit will reposition if no reinstruct is received before the next block is encountered or, if the tape has moved 1.2 inches (this is independent of unit gap selection).

NOTE 9: If the previous Read or Write command occurred less than 80 ms prior to new command, this time will be increased by the difference between 80 ms and the actual time since the previous Read or Write.

NOTE 10: In low speed start/stop mode, the tape will be brought to a full stop after each record regardless of the reinstruct period.

o Other Start/Stop Motion Characteristics

Whenever a change from read-to-write mode is experienced (forward direction), a "jog" operation is performed to position the erase head within the IBG. The time to execute the jog operation is nominally 191 milliseconds. When changing from write to read reverse or rewind, a forward jog to erase a full gap is inserted by the transport. This insures that there is no glitch in the initial gap when the write head is turned off. Time to execute the forward jog is 120 milliseconds.

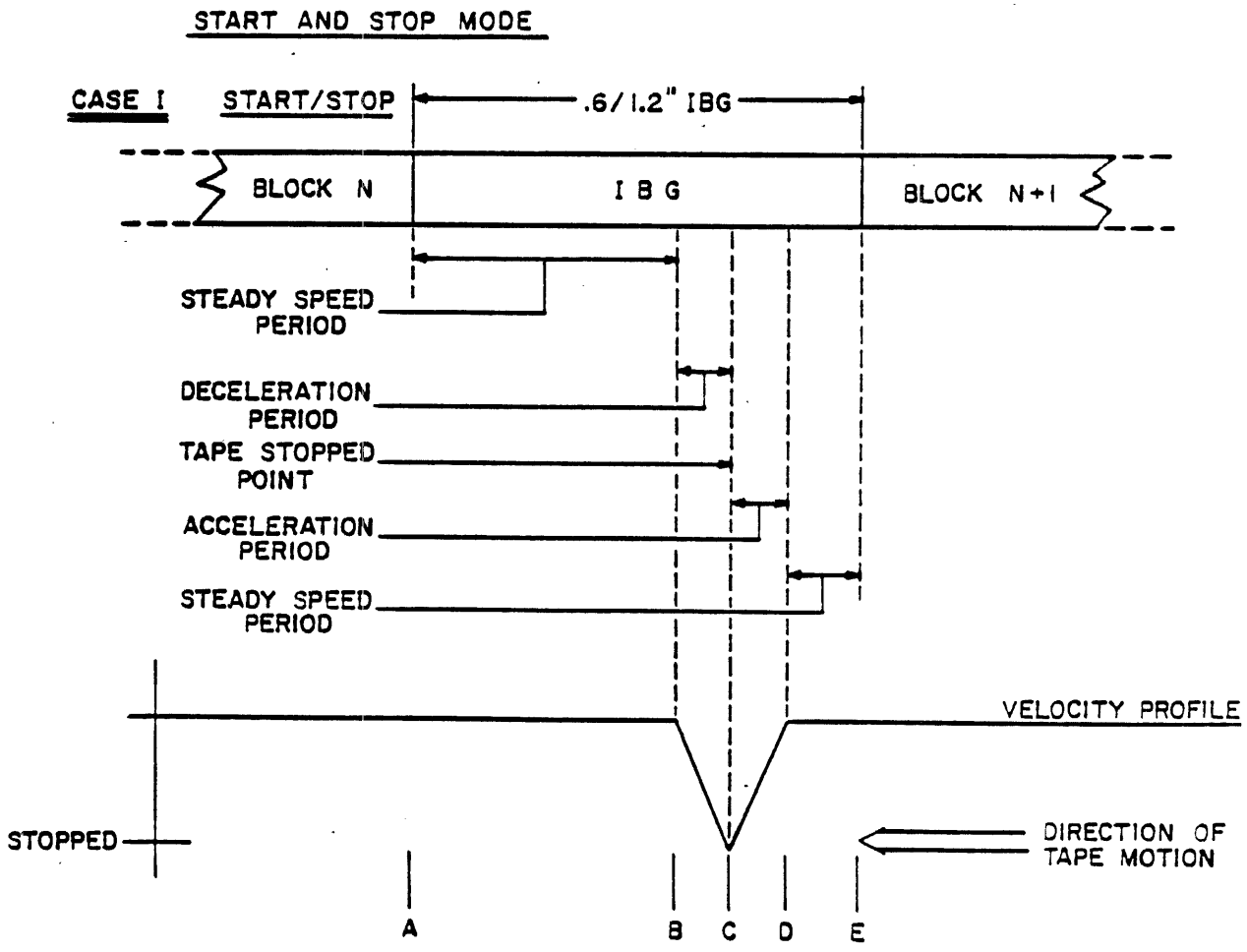

Figure 4-35. START/STOP TAPE MOTION CONTROL

Streaming Mode

The streaming modes are high performance operating modes designed to accommodate continuous transfers of many data blocks to or from tape. Unlike the start/stop mode, tape acceleration and deceleration cannot be accomplished within the interblock gap (IBG). In order to efficiently utilize the streaming mode, tape motion must be sustained by commanding successive data operations. This is accomplished by issuing subsequent commands to the transport during the time the transport is traversing the IBG. (This command window is referred to as the command reinstruct time.) If a follow-up command is not received during the reinstruction interval, a repositioning cycle is required. (A Reverse command can be received during the initial down ramp and will be executed without going through the complete repositioning cycle.) For example, assume that the transport has just completed a write data operation. If the normal IBG length of 0.6 inch is commanded by the system, then the system has 3.5 milliseconds (ms) (0.6 inch/100 inches per second) to respond with a subsequent Write command in order for streaming mode to be sustained. If the subsequent Write command is not received by the end of the reinstruction interval, the transport repositions itself in anticipation of the next streaming mode command. This repositioning cycle time is defined in Table 4-4.

Three sequences of events, which generally describe the motion characteristics of the transport in streaming mode, are as follows:

- Case 1 - Command Received During Reinstruction Interval
- Case 2 - Command Received During Repositioning Cycle
- Case 3 - Command Received Following Repositioning Cycle

These three sequences are applicable to both forward and reverse operations and are described on the following pages individually. First, a more general discussion of streaming mode motion characteristics is presented.

Refer to Figure 4-36. In order for the transport to perform a data operation on Block N + 1 from a stopped position (point E), it must first accelerate and be up to speed at point F as referenced to the read head in the case of a read operation, or erase head in the case of a write operation. For the case where the transport has just completed a data operation on Block N and a repositioning cycle is required, the transport begins the repositioning cycle at point B and traverses path BCDE. The transport then positions itself at point E in anticipation of the next operation. The transport presumes the next operation to be a streaming mode operation on Block N + 1. A sequence chart is presented in Table 4-5 which identifies transport streaming mode motion sequences for combinations of previous and present command issuances. In all cases, the next command is received during the reinstruct time. This chart refers to the diagram of Figure 4-36.

Table 4-5. Streaming Mode Motion Sequence Chart

PREVIOUS COMMAND	FORWARD READ	REVERSE READ	WRITE
Forward Read	Path ABF	Paths ABC, CHDG	Path ABCDEF
Reverse Read	Paths HDE, EABF	Path HDG	Paths HDE, EABF
Write	Not Recommended	Paths ABC, CHDG	Path ABF

The above mentioned three streaming mode sequences designated Cases 1, 2 and 3 apply to both read and write operations. A parameter table is presented in Table 4-4 which specifies key parameter with respect to the following discussions.

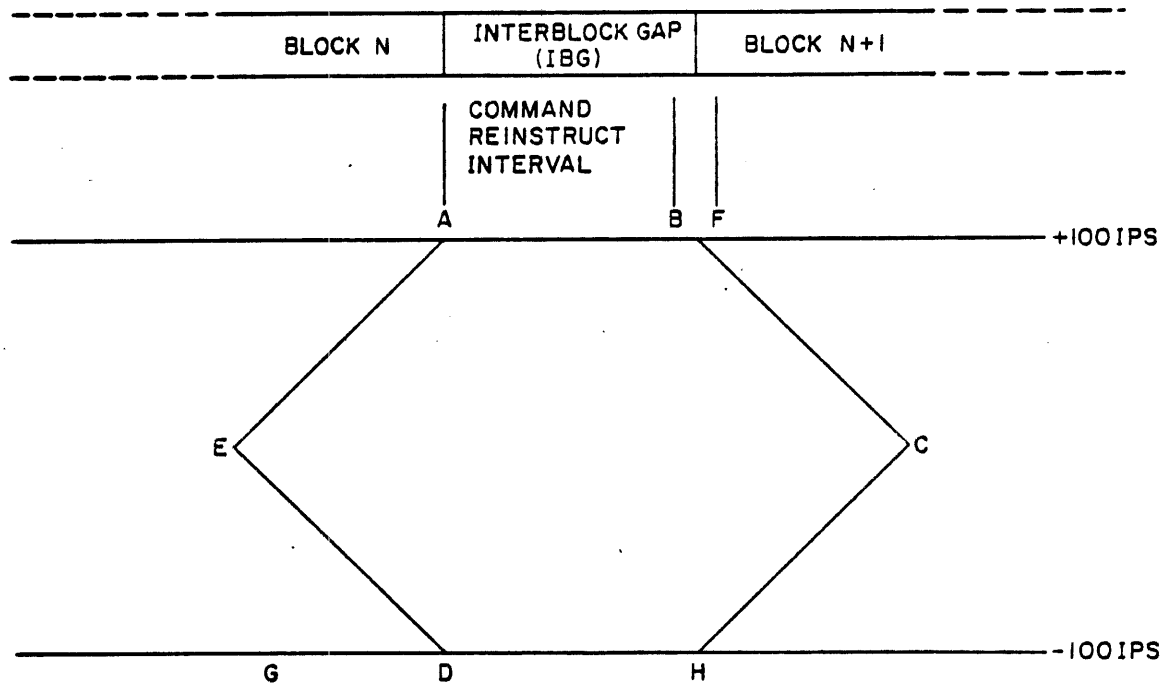

Figure 4-36. STREAMING MODE VELOCITY DIAGRAM

- Case 1 - (Non-Stop) Command Received During Reinstruction Interval

  A command is received sometime during the command reinstruct period following the data operation on Block N. Note that the velocity profile at the bottom of the figure indicates that 100 ips velocity is maintained without interruption through the processing of Block N and N + 1.

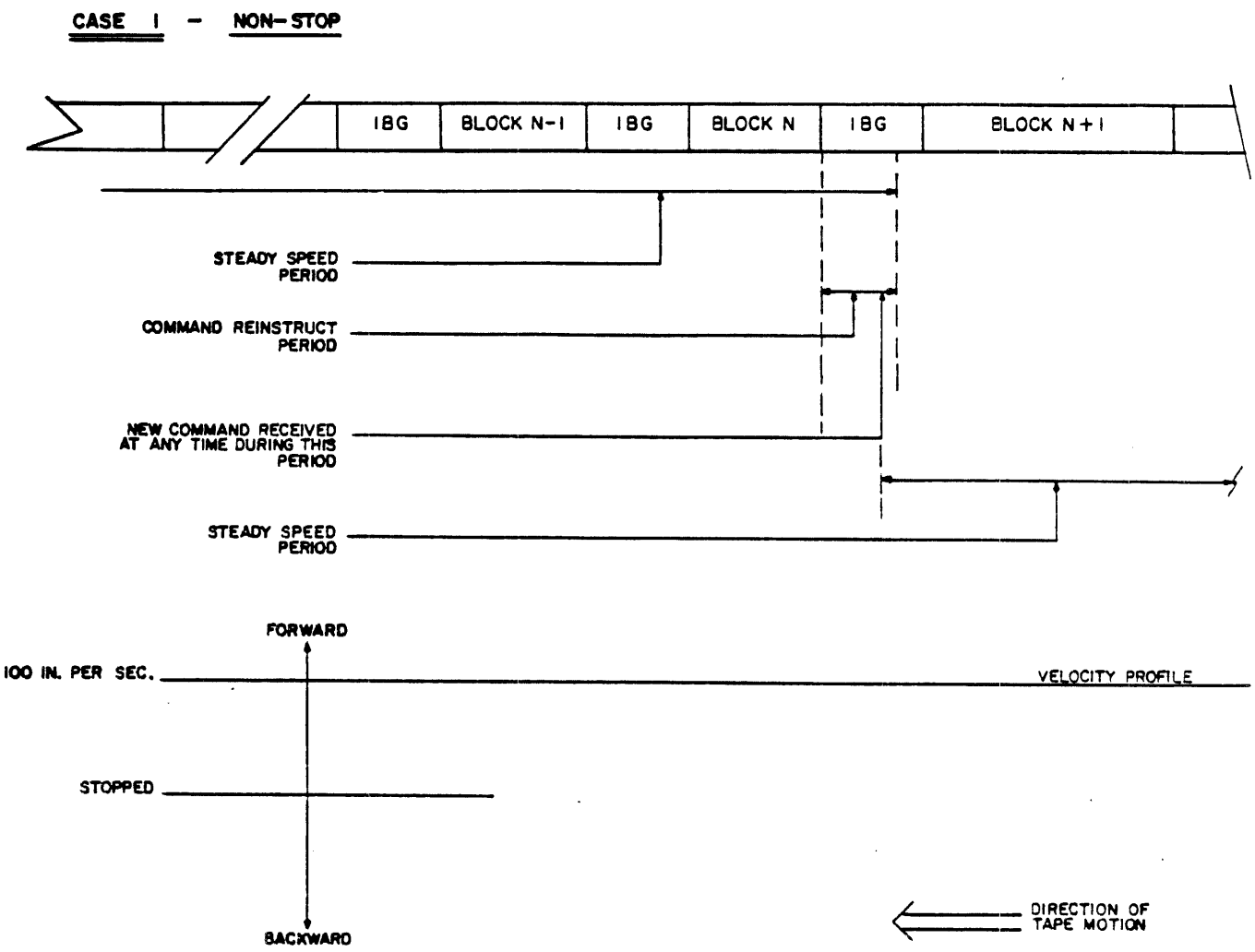

Figure 4-37. TAPE MOTION CONTROL - CASE 1

o Case 2 - (Momentary Stop) Command Received During Repositioning Cycle

A command is not received during the command reinstruct period, but is received during the repositioning cycle. Figure 4-38 illustrates the sequence of events with respect to transport motion and command transfer.

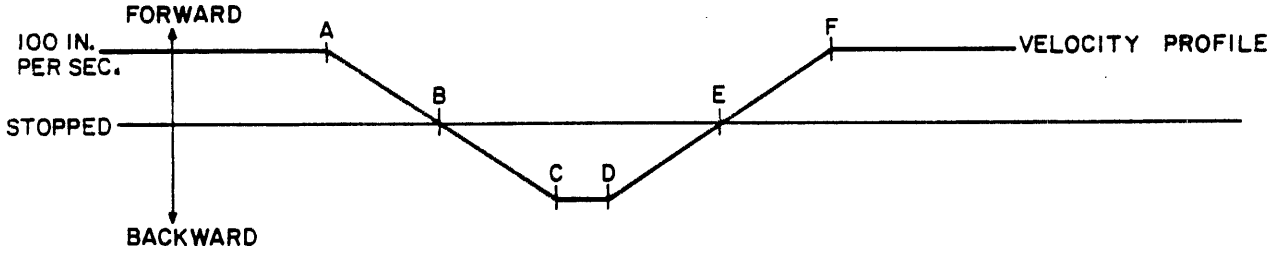

Figure 4-38. TAPE MOTION CONTROL - CASE 2

The velocity profile illustrates tape velocity characteristics. Looking at the diagram of Figure 4-39, it shows that tape stops only momentarily to change direction. The velocity profile identifies the time sequence of events. The correspondence between the time and distance portrayals in sequence is as follows:

EVENT	VELOCITY PROFILE POSITION
Steady Speed Period	Up to Point A
Forward Motion Deceleration	A-B
Tape Motion Stopped Momentarily	B
Reverse Motion Acceleration	B-C
Full Speed Reverse Motion	C-D
Reverse Motion Deceleration	D-E
Tape Motion Stopped Momentarily	E
Forward Motion Acceleration	E-F
Steady Speed Forward Through Data Block N + 1	Point F and On

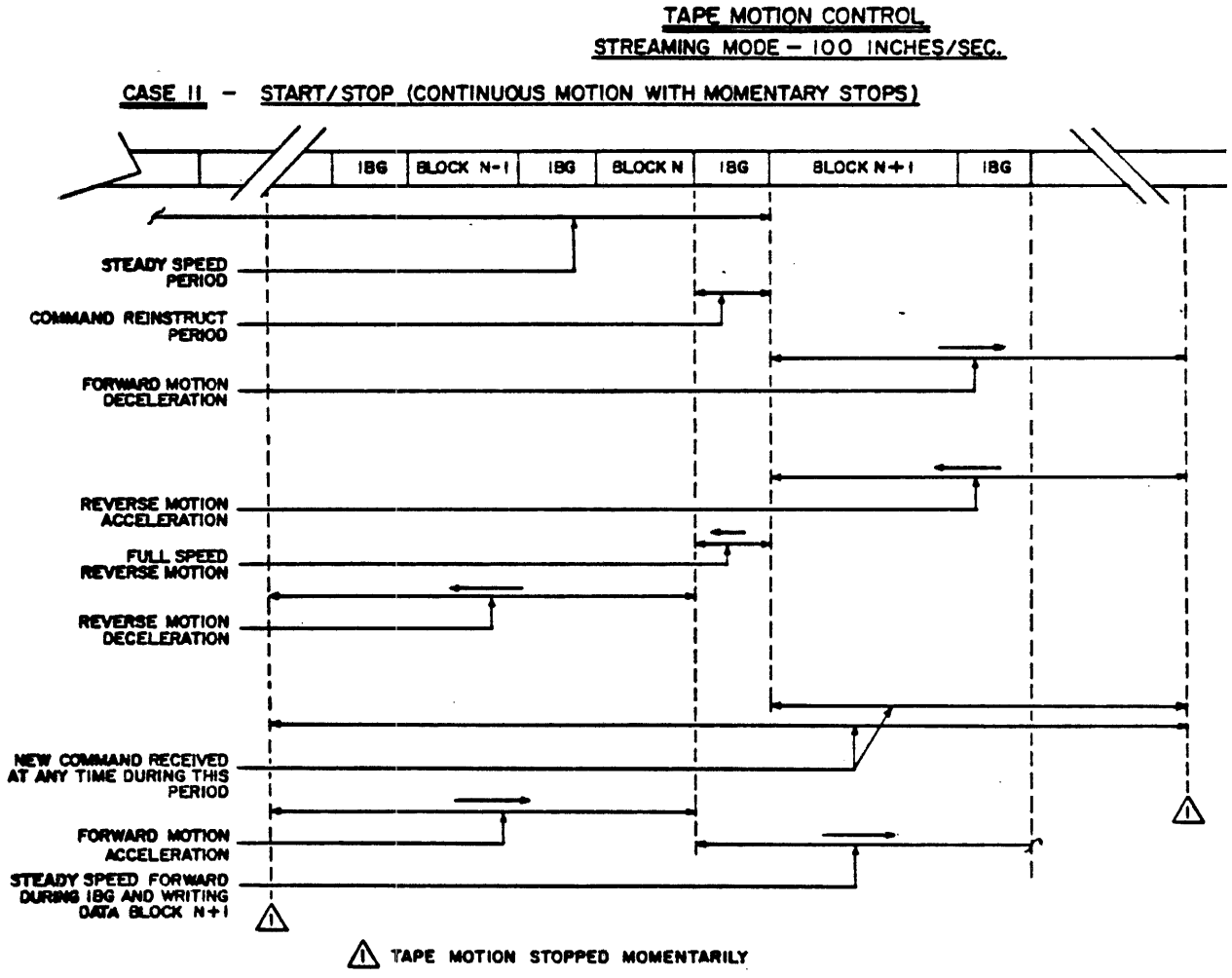

Figure 4-39. TAPE MOTION CONTROL - CASE 2 (Cont'd)

o Case 3 - (Wait For Command) Command Received Following Repositioning Cycle

Case 3 is very similar to Case 2 except that the subsequent command is not received until the tape has come to rest at point E1. The tape is not accelerated until time E2 when the new command is received. Other than for this delay in receiving the next command, the correspondence between time and distance portrayals is the same for Cases 2 and 3. Refer to Figure 4-40.

EVENT	VELOCITY PROFILE POSITION
Steady Speed Period	Up to Point A
Forward Motion Deceleration	A-B
Tape Motion Stopped Momentarily	B
Reverse Motion Acceleration	B-C
Full Speed Reverse Motion	C-D
Reverse Motion Deceleration	D-E1
Tape Motion Stopped While Awaiting New Command	E1-E2
Forward Motion Acceleration	E2-F
Steady Speed Forward Through Data Block N + 1	Point F and On

Important to note is that the transport performs all repositioning without system or controller intervention.

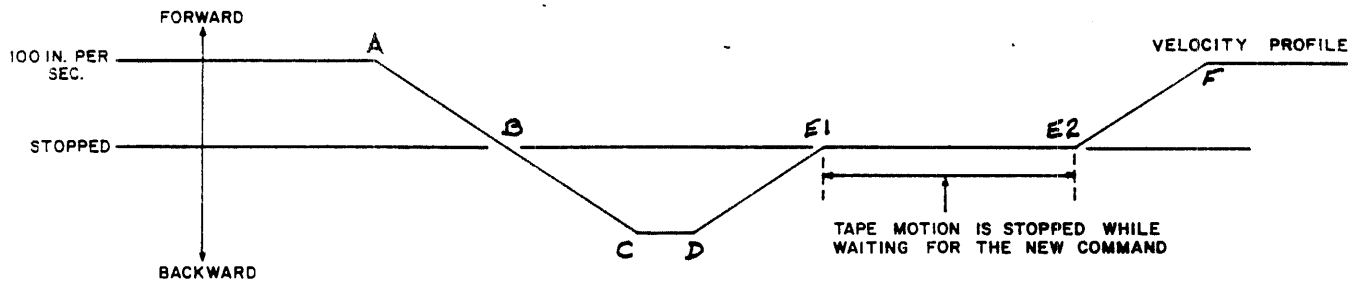

Figure 4-40. TAPE MOTION CONTROL - CASE 3

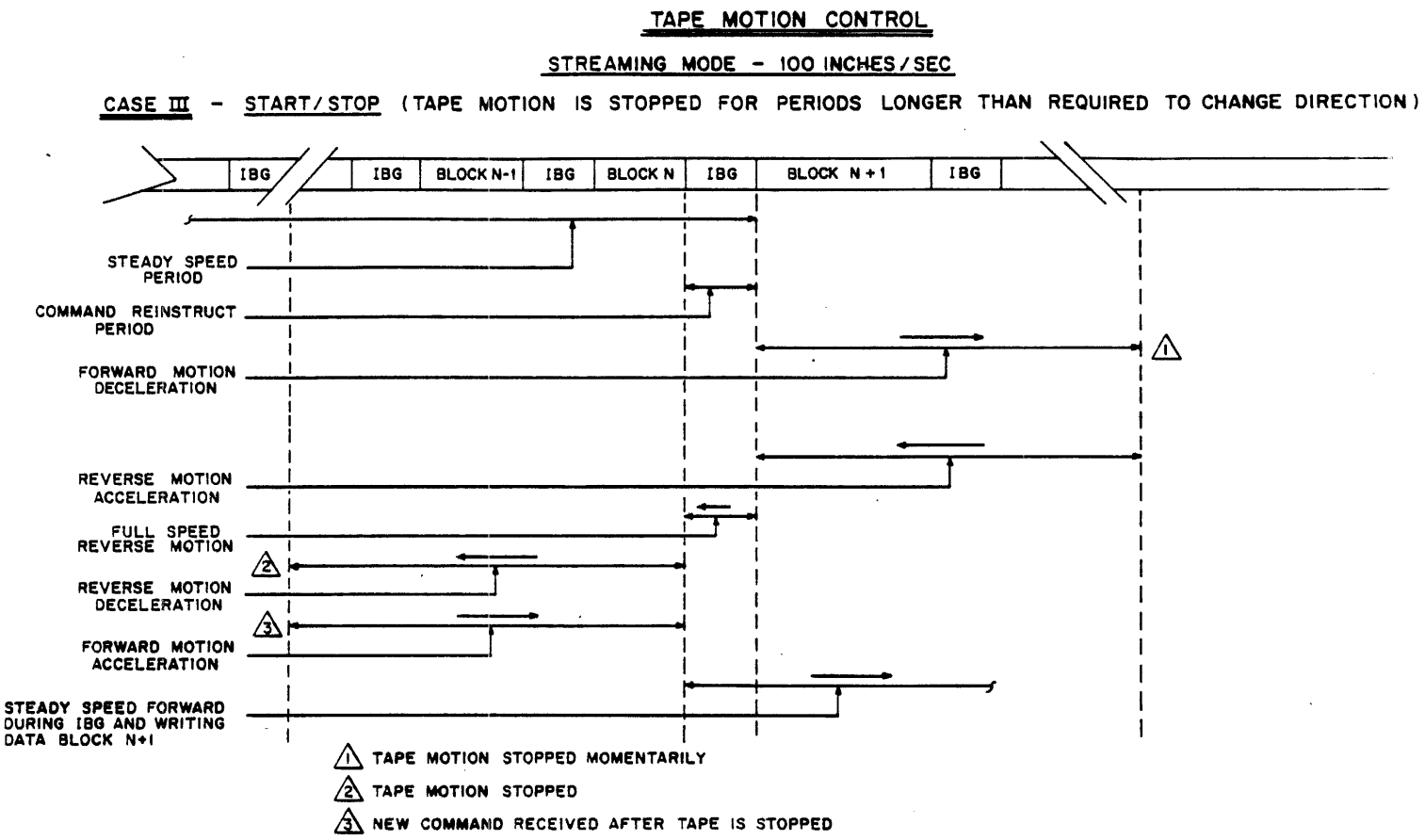

Figure 4-41. TAPE MOTION CONTROL - CASE 3 (Cont'd)

25 ips Mode Control (25 IPS Unit Only)

The transport will automatically switch between 25 ips streaming mode and 25 ips start/stop mode in response to system usage. Essentially, when repositioning becomes excessive in streaming mode, rather than continue to 'thrash', the transport will switch to start/stop mode. The benefits of this change are significant; if the system cannot reinstruct to keep the unit streaming, a 221 millisecond reposition cycle is required before processing of next block can occur. In start/stop mode, the access time is reduced to 64 millisecond worst case (if previous block = 1 byte) and 24 millisecond if previous block was greater than 1.6K bytes long (see Note 2).

The transport will switch back to streaming mode when the command Reinstruct Time consistently reduces to a value that would allow streaming.

NOTES

1. As to avoid 'jog' delays, mode switching is done at 25 ips rather than when stationary. In essence, a mode switch takes effect at the end of the block in process.

2. If the time to traverse the preceding block, plus the reinstruct time, exceeds 60 ms, the access time will be 22 ms for Write and 24 ms for Read. The access time will be increased by the difference between 60 ms and the time to traverse the preceding block, plus the reinstruct time, if above criteria is not met.

Optional Adaptive Velocity Control (AVC) (25 ips Units Only)

When this option is envoked, rather than selecting 25 ips mode when low speed is commanded, the transport will enter a mode, whereby the most optimum speed will be chosen to match system requirements. If 100 ips mode gives the best throughput, then this mode will be used; the same applies to 25 ips streaming and 25 ips start/stop modes. This choice of operating mode will be done automatically by the STU and does not require any involvement by the system. This option allows the transport to be interfaced to a standard adapter and to run under standard 1/2 inch tape software, and yet offer the advantage of streaming.

NOTES

1. With this option enabled, the unit will respond to a Set 100 ips command in the normal manner.

2. This option is enabled by relocating a pluggable jumper on one of the two main printed circuit boards.

COMMAND CLASSIFICATION

The transport command set is categorized into five categories dealing with the type of command being executed. They are as follows:

- o Motion Control: Rewind, Speed Mode Change
- o Mode Control: On-Line, Off-Line/Rewind
- o Data Operations: Read, Write
- o Read Sense: Sense Data Transfer
- o Data Loopback: Write-to-Read Data Channel Loopback

Command Categories 1 and 2 are associated with transport control; i.e., Rewind and On-Line/Off-Line are primarily transport related. These commands are transferred by the controller by pulsing the associated interface line. Command categories 3 thru 5 are associated with the formatting/data transfer function of the transport. These commands are transferred via the -FGO strobe sampling of the interface lines identified in the Interface Section of this manual. Speed Mode Change is also strobed by -FGO, but is classified as a Motion Control command.

Interface States

There are several states within which the transport may reside during execution of data operations. These states are described in this section with respect to command transfer and interface signal conditions. Refer to Figures 4-42 thru 4-46 for an illustration of time representation of States B thru H discussed below.

- o State A

  In this state, the transport is Off-Line (-FONL = False) and Selected (-FTAD0, -FTAD1); the formatter is selected (-FFAD) and enabled (-FFEN). On-Line, Data Loopback, and Sense Read commands may be issued. A Sense Read can be performed, but transport status is not available.

  In each of the following states, the transport is On-Line, Selected and Ready (-FRDY); the formatter is Selected and Enabled.

o State B

In this state, a Command Type 1, 2, 3, 4 or 5 may be issued. Refer to Command Classification for description of command categories. Figures 4-42 thru 4-46 illustrate the transfer of a Type 3 command. For both streaming and start/stop modes, this state and its next state are the same following receipt of the FGO command.

o State C

In this state, a Type 3 command has been received. This state is identical in both the streaming and start/stop modes and is identified by the conditions of signal lines -FFBY and -FDBY. This state is entered upon receipt of the -FGO command and exited when the transport is up to speed or positioned at the beginning of the data block. No new commands should be issued while in this state.

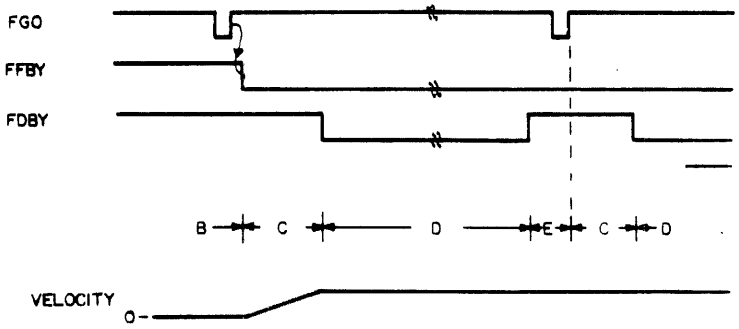

Figure 4-42. START/STOP - NEW COMMAND RECEIVED DURING REINSTRUCT

o State D

This state represents the data transfer cycle. This state is entered upon assertion of the -FDBY signal and exited upon negation of -FDBY. -FDBY is only asserted while -FFBY is asserted. No new commands should be issued while in this state. This state is identical in both streaming and start/stop modes.

o State E

This state is the reinstruct interval. Receipt of a follow-up command identical to the previous -FGO command continues tape motion at either low or high speed in streaming mode. Refer to Figures 4-42 and 4-46.

o State F

This state is unique to the start/stop mode. In this state, a new command was not received during the reinstruction interval (State E) and, consequently, tape is being decelerated to a stop. Any command issued during this time is not acted upon until State B is re-entered following the stopping of tape.

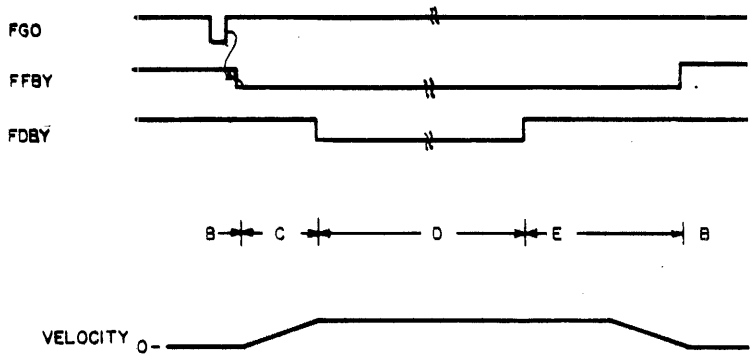

Figure 4-43. START/STOP - NO NEW COMMAND RECEIVED

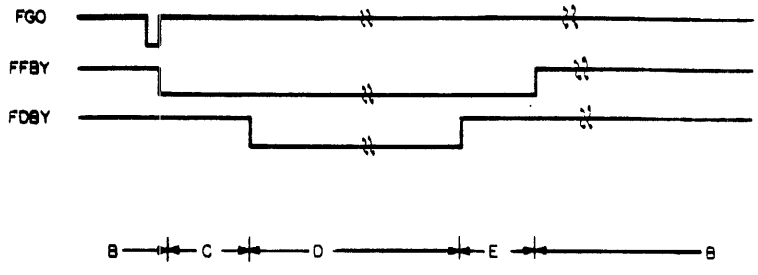

Figure 4-44. STREAMING - NO NEW COMMAND RECEIVED

o State G

This state is unique to the streaming mode. This state is entered at the expiration of the reinstruct interval (State E) and represents the repositioning cycle. State G is exited either upon receipt of a Type 3 command or upon completion of repositioning cycle. Refer to Figures 4-45 and 4-46.

o State H

This state is unique to the streaming mode. It is entered upon receipt of a follow-up command which continues streaming mode. In State H, -FFBY remains asserted. This state is exited upon assertion of -FDBY, indicating the beginning of the next data block.

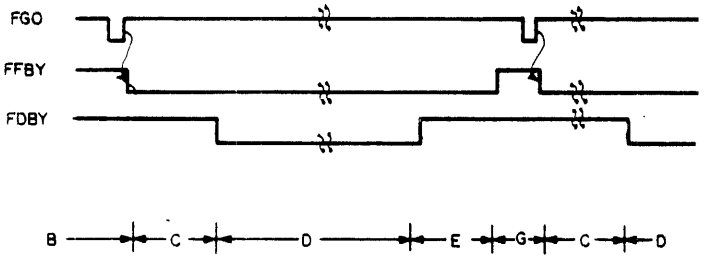

Figure 4-45. STREAMING - NEW COMMAND RECEIVED DURING REPOSITIONING

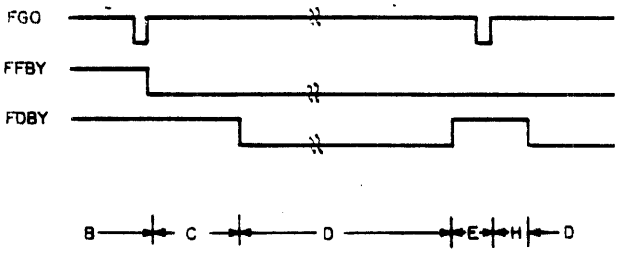

Figure 4-46. STREAMING - NEW COMMAND RECEIVED DURING REINSTRUCT

GENERAL

This section of the manual contains the schematics and logic diagrams for all PWA's contained in the transport. A complete list of boards is shown in the table below and is arranged in sets numerically by the 8-digit control number. The board assembly layouts are for reference only in locating components. Do not attempt to order new PWA's by the 8-digit drawing number on these drawings, instead, use the Parts Section of the manual to order the appropriate replacement assembly.

Preceding the schematics is the Main Electrical Cable Diagram. This diagram shows all cables and their respective connectors routed to the various transport assemblies.

Table 5-1. SCHEMATIC INDEX

TITLE	SCHEMATIC NO.	ASSEMBLY NO.	PAGE NO.
Cable Diagram	77012280		5-5
Control Panel	77005910	7700591X	5-6
Read/Write/Servo	77041120	7704112X	5-7
Formatter/Control	77041130	7704113X	5-33
Formatter/Control	77042070	7704207X	5-57
Power Supply	77040450	7704045X	5-82
Power Supply Control	77040460	7704046X	5-86
Power Amp	77041190	7704119X	5-90
Voltage Select	77040590	7704059X	5-96

A Glossary of Terms follows the logic diagrams. Terms are listed in alphabetical order for each of the PWA logic sets.

SIGNAL TRACING (OFF-BOARD)

When it becomes necessary to trace a specific signal(s) or cable/wiring, refer to the cabling diagrams located at the rear of the logic diagrams.

In using the cable diagrams, you must first reference a specific signal such as the Formatter Control PWA signal -MCLR (Master Clear) as shown in Figure 5-1. This signal (-MCLR) at P6-pin 8 and P2-pin 38 (referring to cable/wiring diagrams sheet 1) comes from J5-pin 8 of the power supply (Figure 5-2). The same signal (-MCLR) is also at J2-pin 38 of the Read/Write Servo PWA as indicated by sheet 4 (Figure 5-3) of the diagrams via P2-pin 38.

ON-BOARD TRACING

In many instances, a signal(s) is confined to a specific board, only to be interconnected to other board components. When this occurs, the signal may be traced to another location by referencing the signal name, line identifier, and sheet number as illustrated in Figure 5-1.

CABLE BUNDLING

In some instances, cable bundling exists between logic circuits as shown below. When this occurs, the internal wiring of the bundle remains unchanged; i.e., 1 to 1, 2 to 2, 12 to 12, etc.

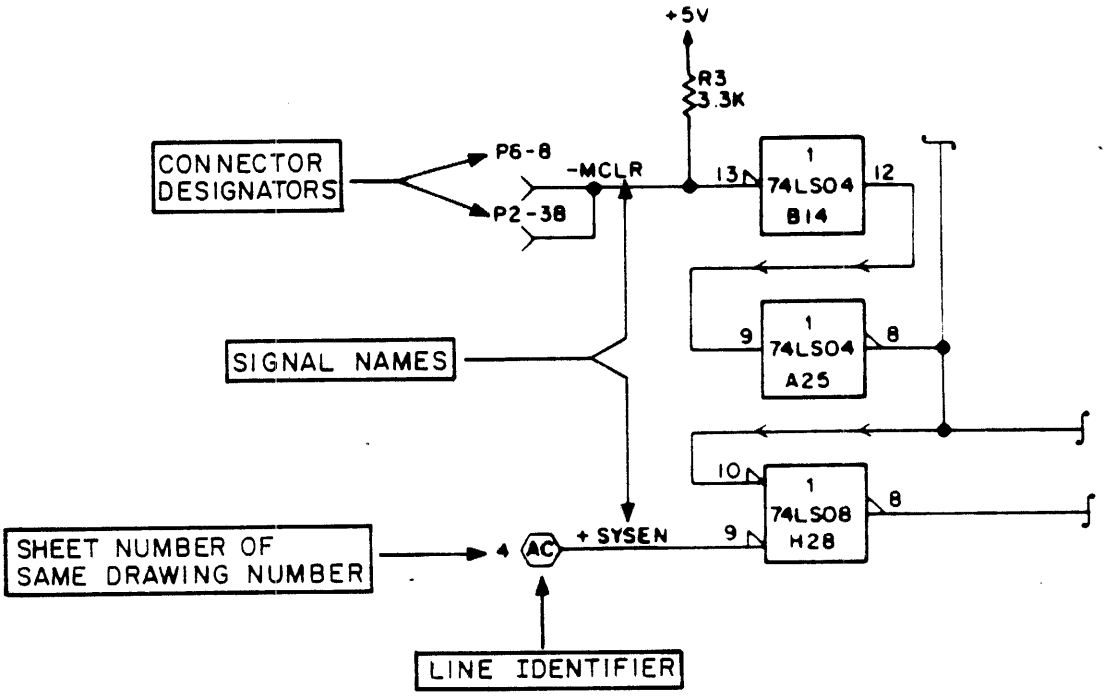

Figure 5-1. FORMATTER CONTROL PWA

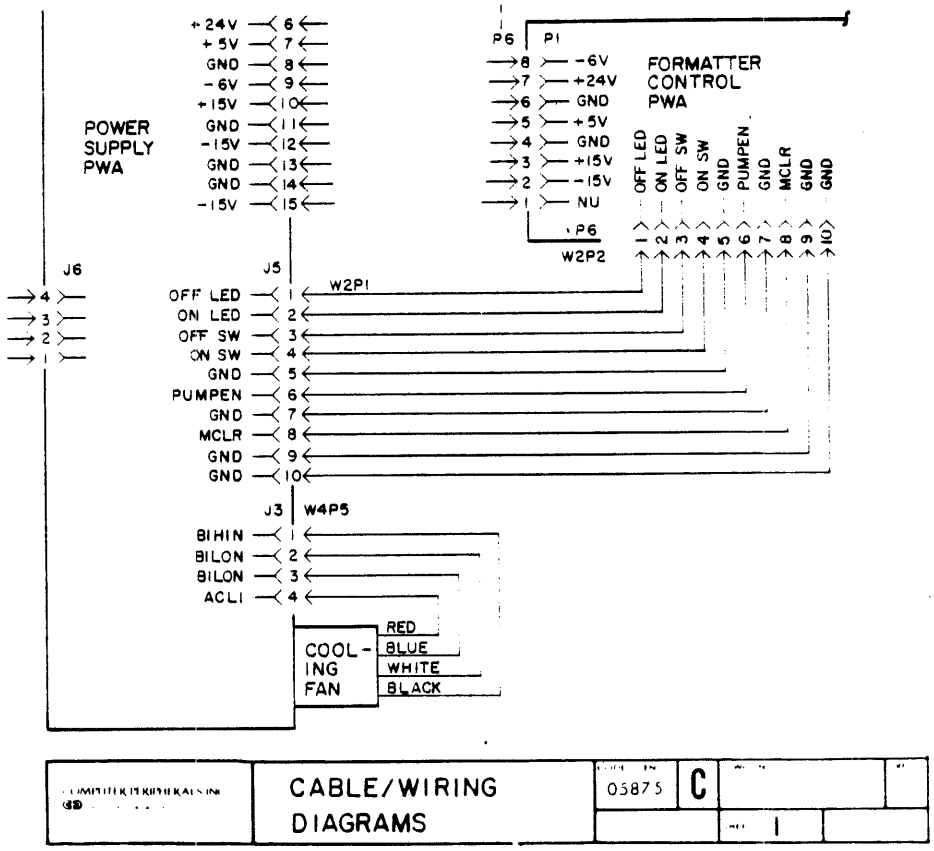

Figure 5-2. POWER SUPPLY

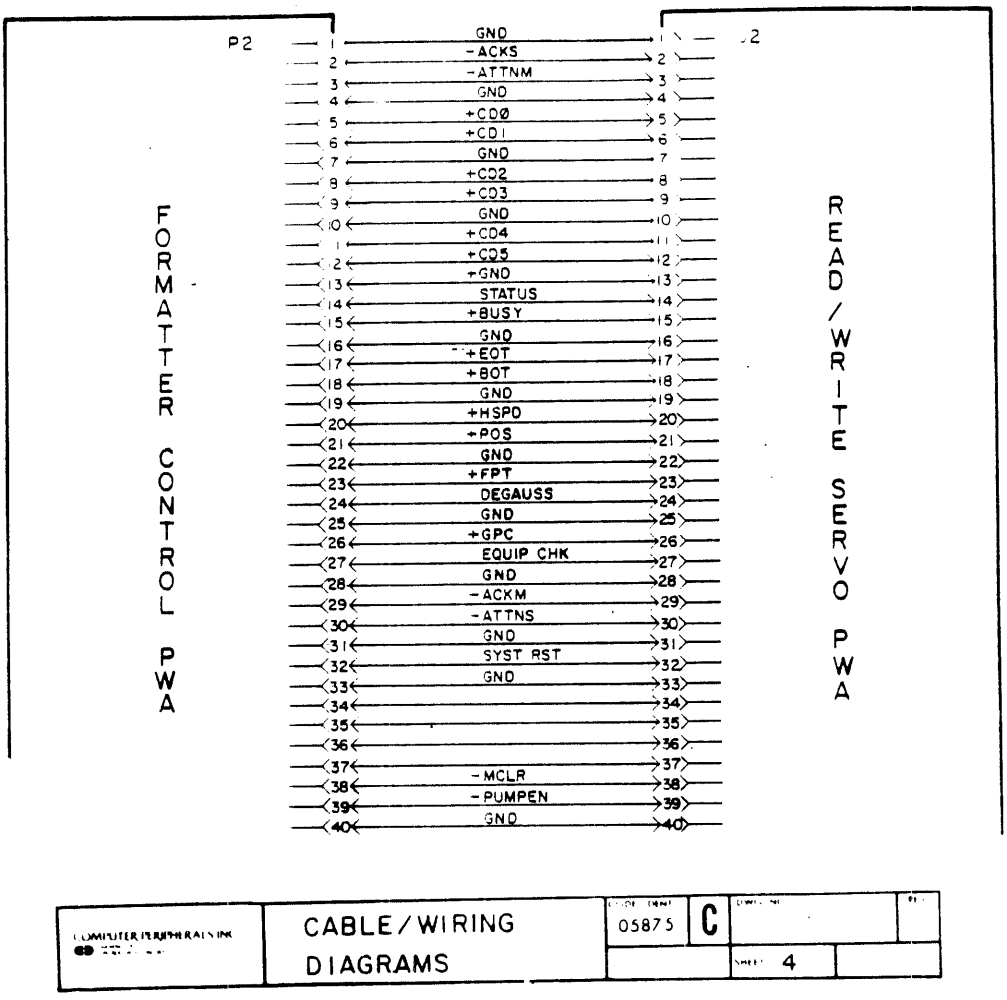

Figure 5-3. READ/WRITE SERVO PWA

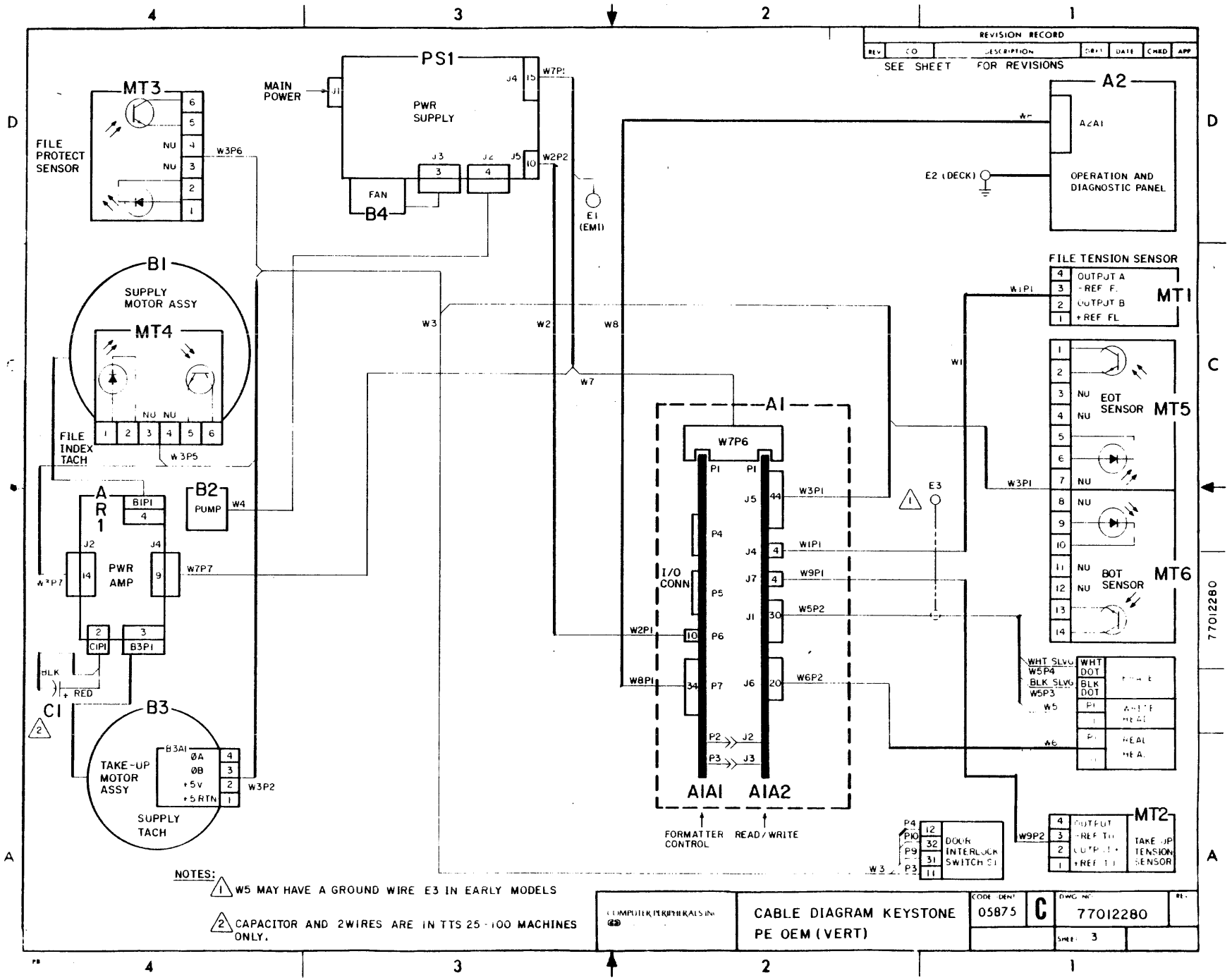
REVISION RECORD
REV
CO
DESCRIPTION
DRFT
DATE
CHKD
APP
SEE SHEET FOR REVISIONS
MT3
FILE PROTECT SENSOR
NU
NU
W3P6
MAIN POWER
J1
PS1
PWR SUPPLY
J4
15
W7P1
J3
J2
J5
10
W2P2
FAN
B4
E1 (EMI)
A2
A2A1
E2 (DECK)
OPERATION AND DIAGNOSTIC PANEL
FILE TENSION SENSOR
MT1
4 OUTPUT A
3 -REF F.
2 OUTPUT B
1 +REF FL
W1P1
B1
SUPPLY MOTOR ASSY
MT4
NU NU
1 2 3 4 5 6
FILE INDEX TACH
W3P5
W3
W2
W8
W7
W1
MT5
EOT SENSOR
NU
MT6
BOT SENSOR
W3P1
E3
A1
W7P6
P1
P4
P5
P6
P7
P2
P3
J2
J3
J5
J4
J7
J1
J6
44
4
30
20
34
I/O CONN
W3P1
W1P1
W9P1
W5P2
W6P2
W2P1
W8P1
A1A1
A1A2
FORMATTER CONTROL
READ/WRITE
A R 1
B1P1
4
J2
J4
14
9
PWR AMP
W7P7
W3P7
B2
PUMP
W4
2
3
C1P1
B3P1
BLK
+ RED
C1
B3
TAKE-UP MOTOR ASSY
B3A1
ØA
ØB
+5V
+5 RTN
4
3
2
1
W3P2
SUPPLY TACH
WHT SLVG
W5P4
BLK SLVG
W5P3
W5
WHT DOT
BLK DOT
W6
P4
P10
P9
P3
12
32
31
11
DOOR INTERLOCK SWITCH S1
W3
W9P2
MT2
TAKE UP TENSION SENSOR
NOTES:
1 W5 MAY HAVE A GROUND WIRE E3 IN EARLY MODELS
2 CAPACITOR AND 2WIRES ARE IN TTS 25-100 MACHINES ONLY.
CABLE DIAGRAM KEYSTONE PE OEM (VERT)
CODE IDENT 05875
C
DWG NO 77012280
SHEET 3
77012280

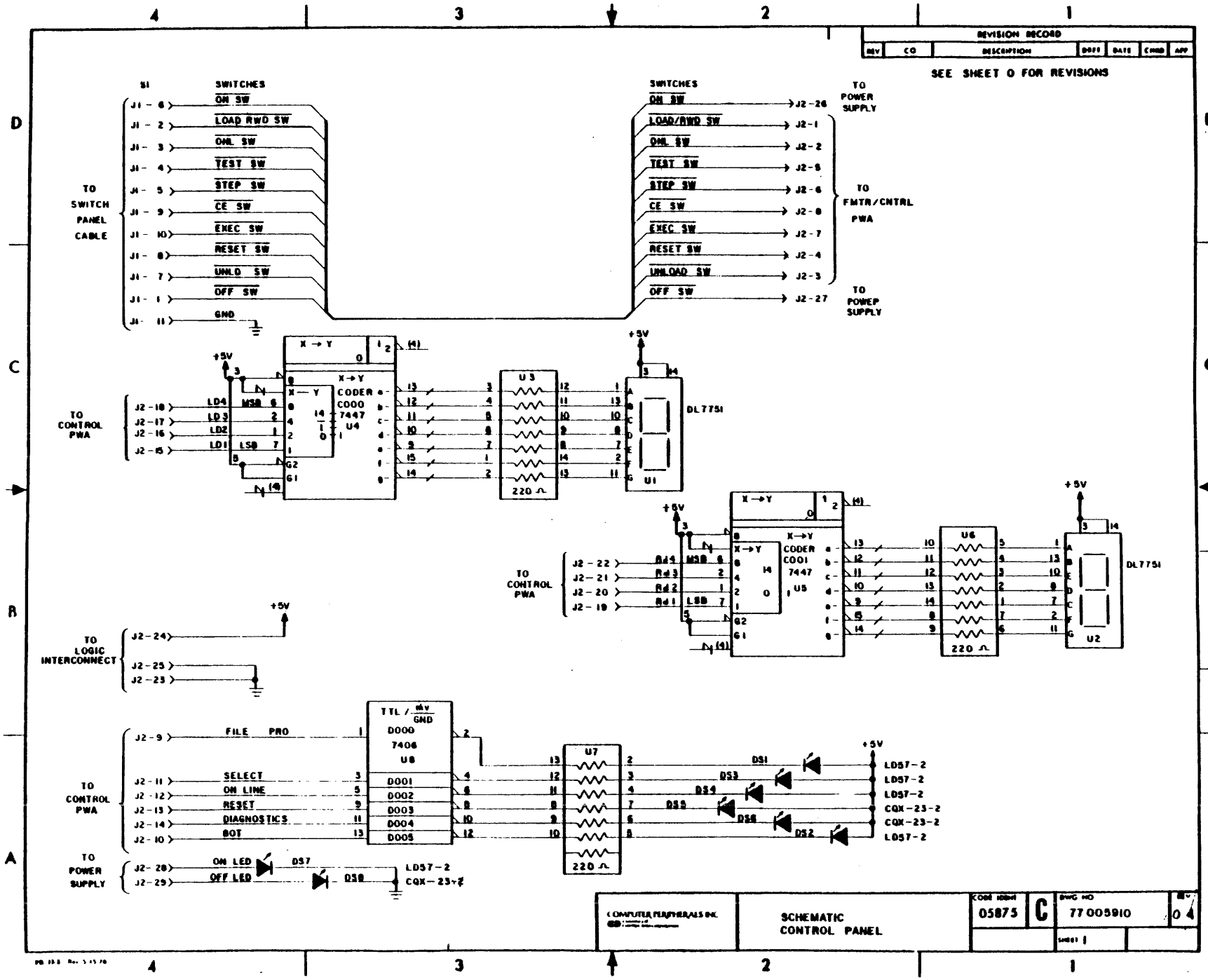
REVISION RECORD
REV | CO | DESCRIPTION | DRFT | DATE | CHKD | APP
SEE SHEET 0 FOR REVISIONS
SI
SWITCHES
J1 - 6 ON SW
J1 - 2 LOAD RWD SW
J1 - 3 ONL SW
J1 - 4 TEST SW
J1 - 5 STEP SW
J1 - 9 CE SW
J1 - 10 EXEC SW
J1 - 8 RESET SW
J1 - 7 UNLD SW
J1 - 1 OFF SW
J1 - 11 GND
TO SWITCH PANEL CABLE
SWITCHES
ON SW → J2-26
LOAD/RWD SW → J2-1
ONL SW → J2-2
TEST SW → J2-5
STEP SW → J2-6
CE SW → J2-8
EXEC SW → J2-7
RESET SW → J2-4
UNLOAD SW → J2-3
OFF SW → J2-27
TO POWER SUPPLY
TO FMTR/CNTRL PWA
TO POWER SUPPLY
+5V
X → Y
X→Y CODER C000 7447 U4
LD4 LD3 LD2 LD1 MSB LSB
J2-18 J2-17 J2-16 J2-15
TO CONTROL PWA
U3
220 Ω
DL775I
U1
X→Y CODER C001 7447 U5
J2-22 J2-21 J2-20 J2-19
Rd4 Rd3 Rd2 Rd1
U6
U2
TO LOGIC INTERCONNECT
J2-24
J2-25
J2-23
TTL / mV
GND
D000 7406 U8
FILE PRO
SELECT
ON LINE
RESET
DIAGNOSTICS
BOT
J2-9 J2-11 J2-12 J2-13 J2-14 J2-10
D001 D002 D003 D004 D005
U7
TO CONTROL PWA
TO POWER SUPPLY
ON LED DS7
OFF LED DS8
J2-28 J2-29
DS1 DS3 DS4 DS5 DS6 DS2
LD57-2 CQX-23-2
COMPUTER PERIPHERALS INC.
SCHEMATIC CONTROL PANEL
CODE IDENT 05875
C
DWG NO 77005910
REV 04
SHEET 1

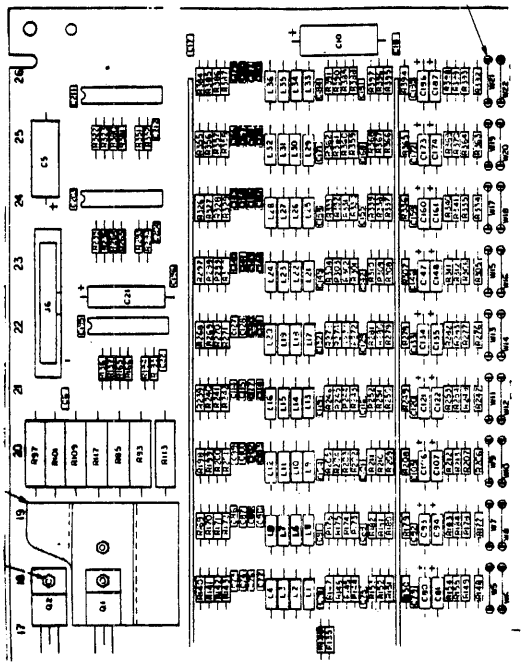

REFERENCE SHEET 1A

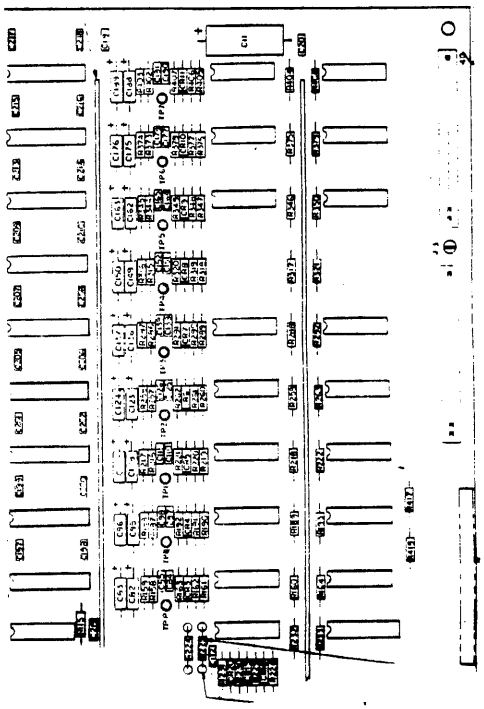

REFERENCE SHEET 1B

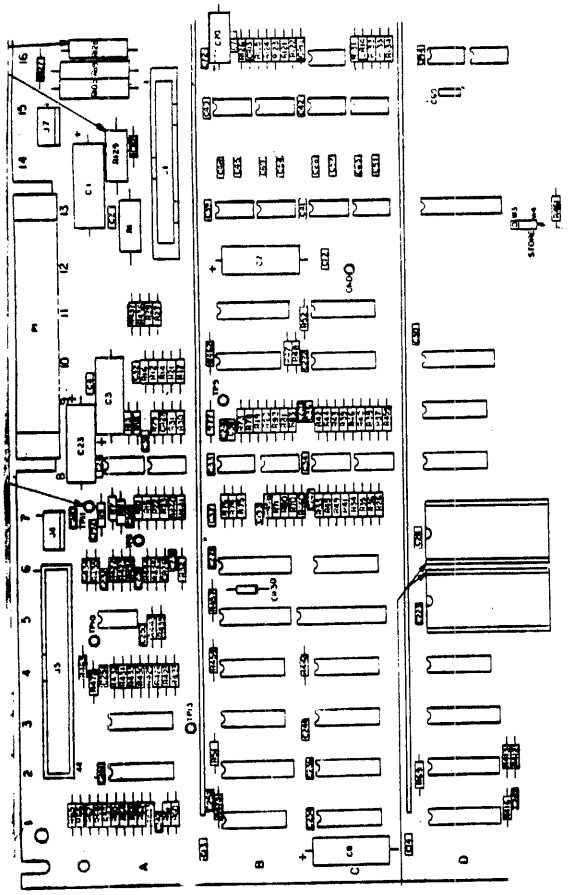

REFERENCE SHEET 1C

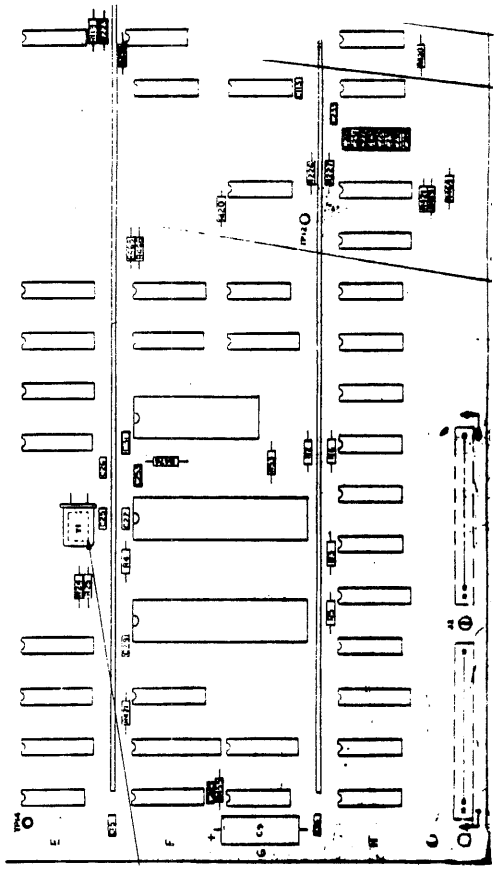

REFERENCE SHEET 1D

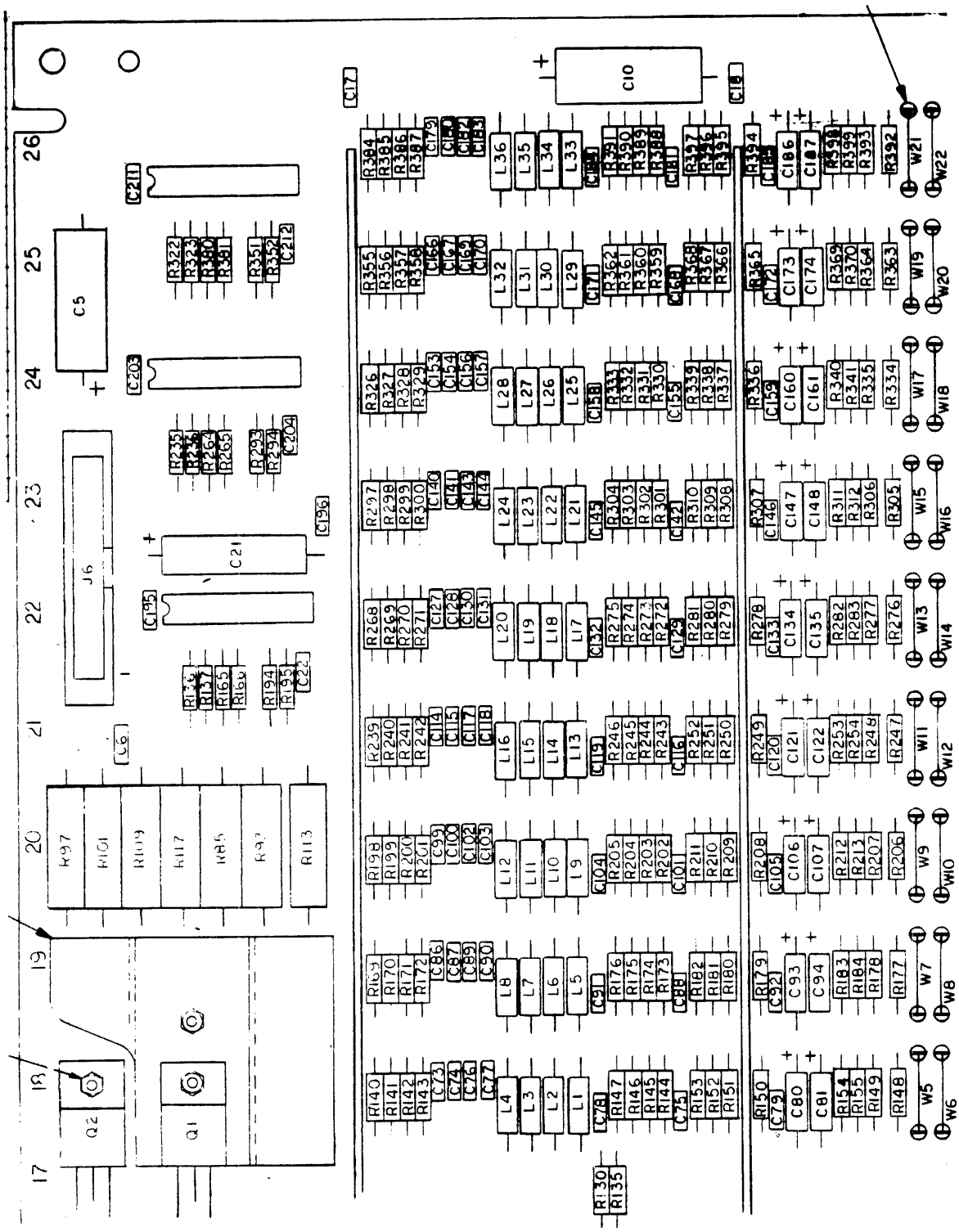

READ-WRITE-SERVO PWA LAYOUT (SHEET 1A)

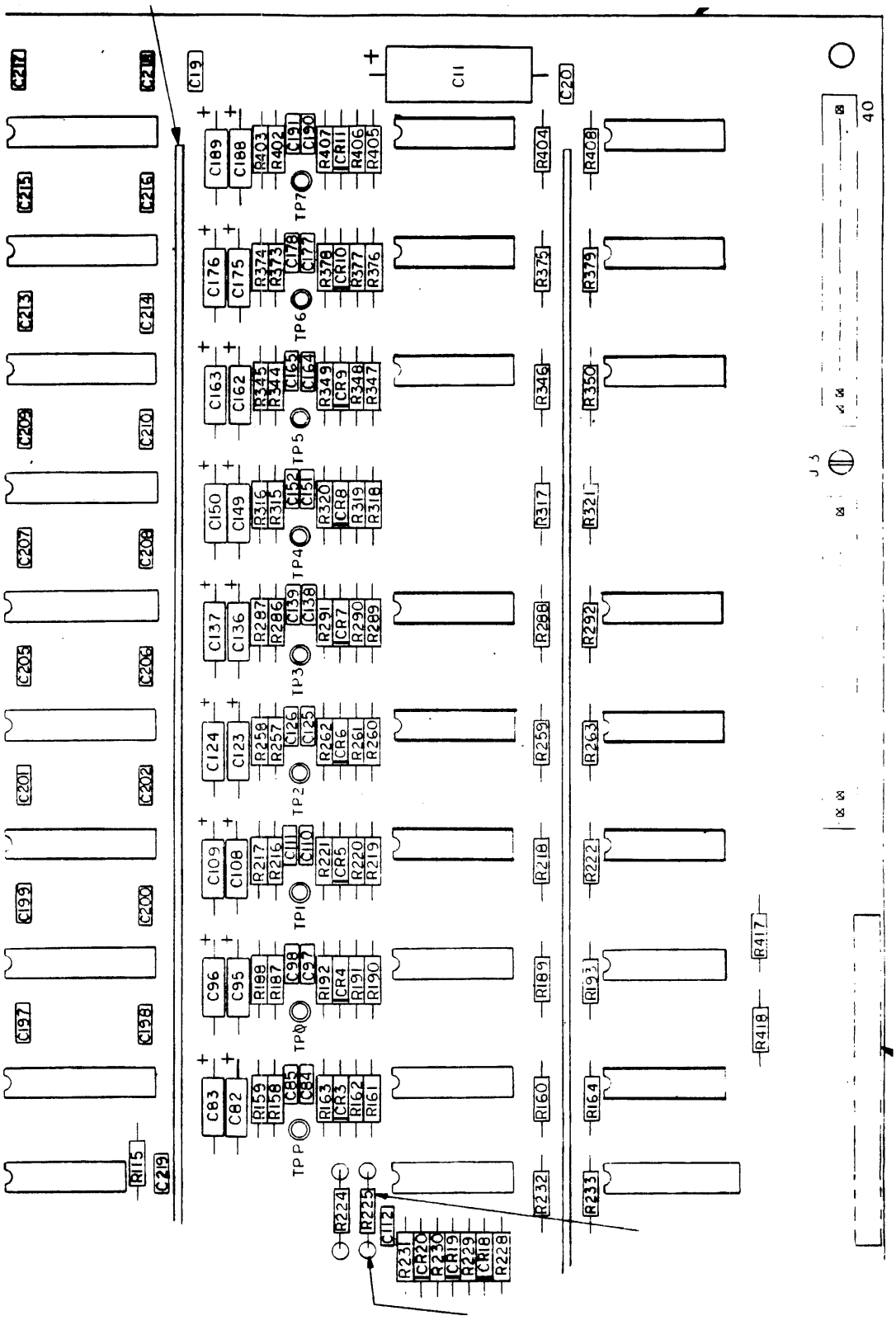

READ-WRITE-SERVO PWA LAYOUT (SHEET 1B)

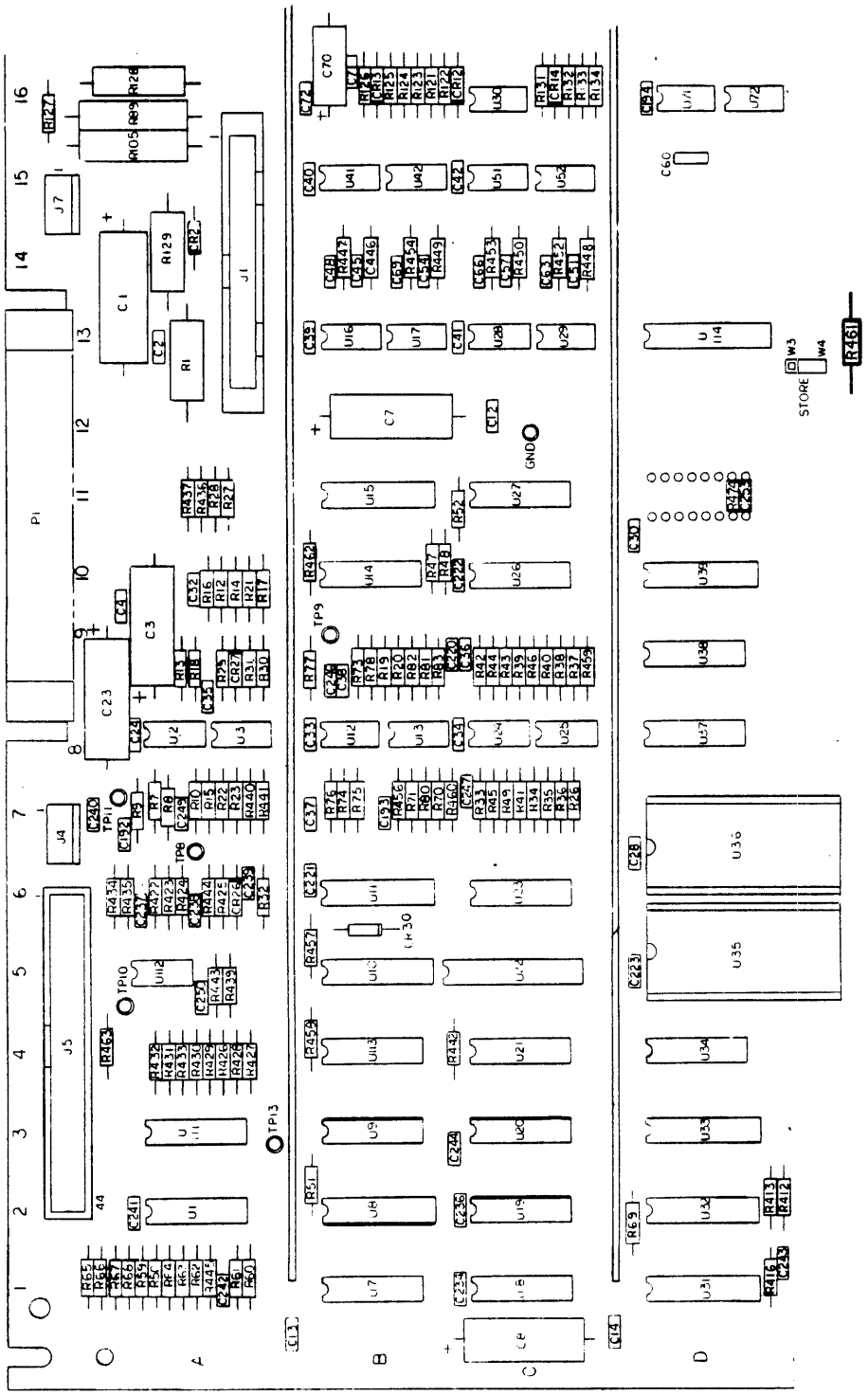

READ-WRITE-SERVO PWA LAYOUT (SHEET 1C)

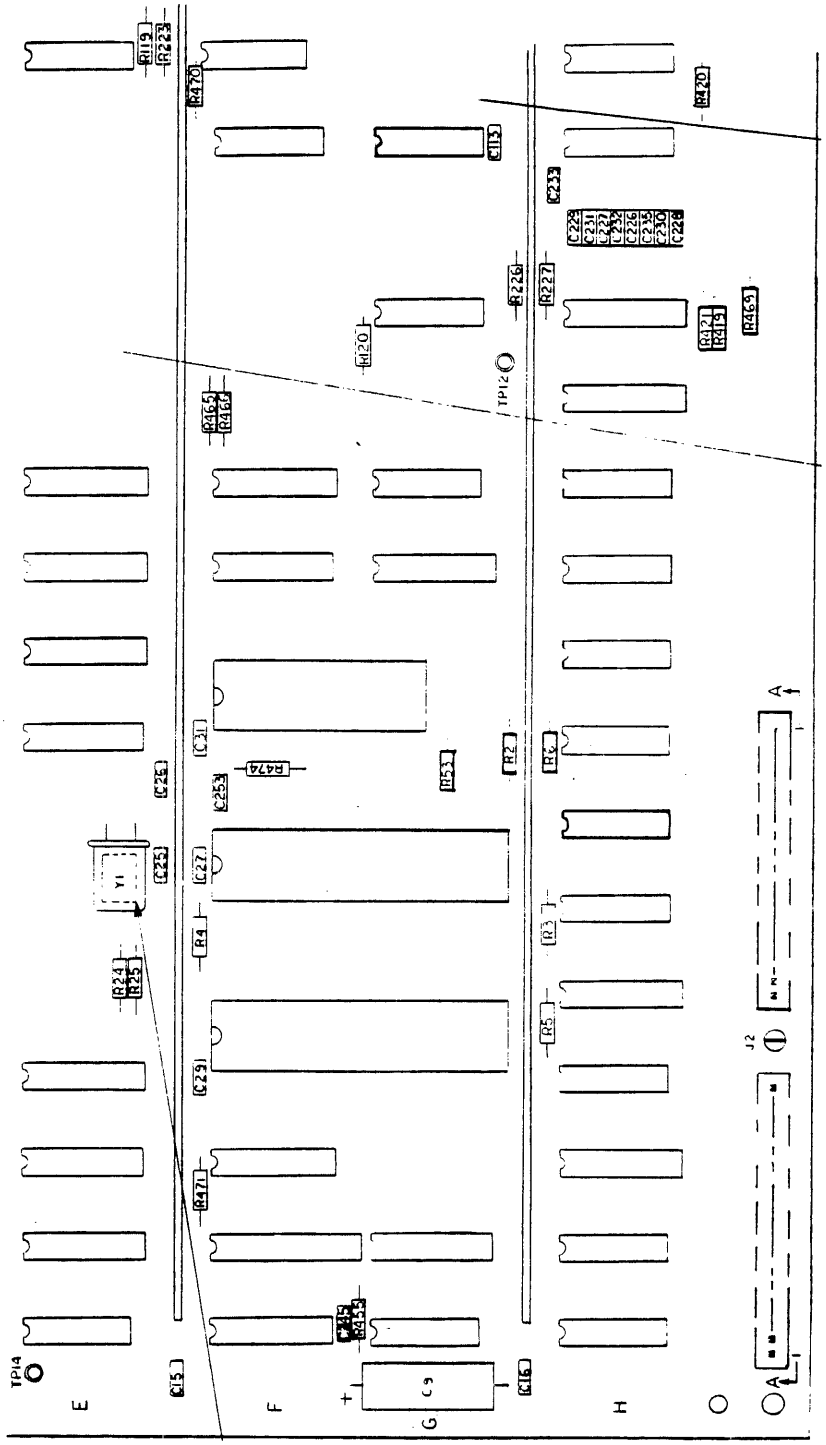

READ-WRITE-SERVO PWA LAYOUT (SHEET 1D)

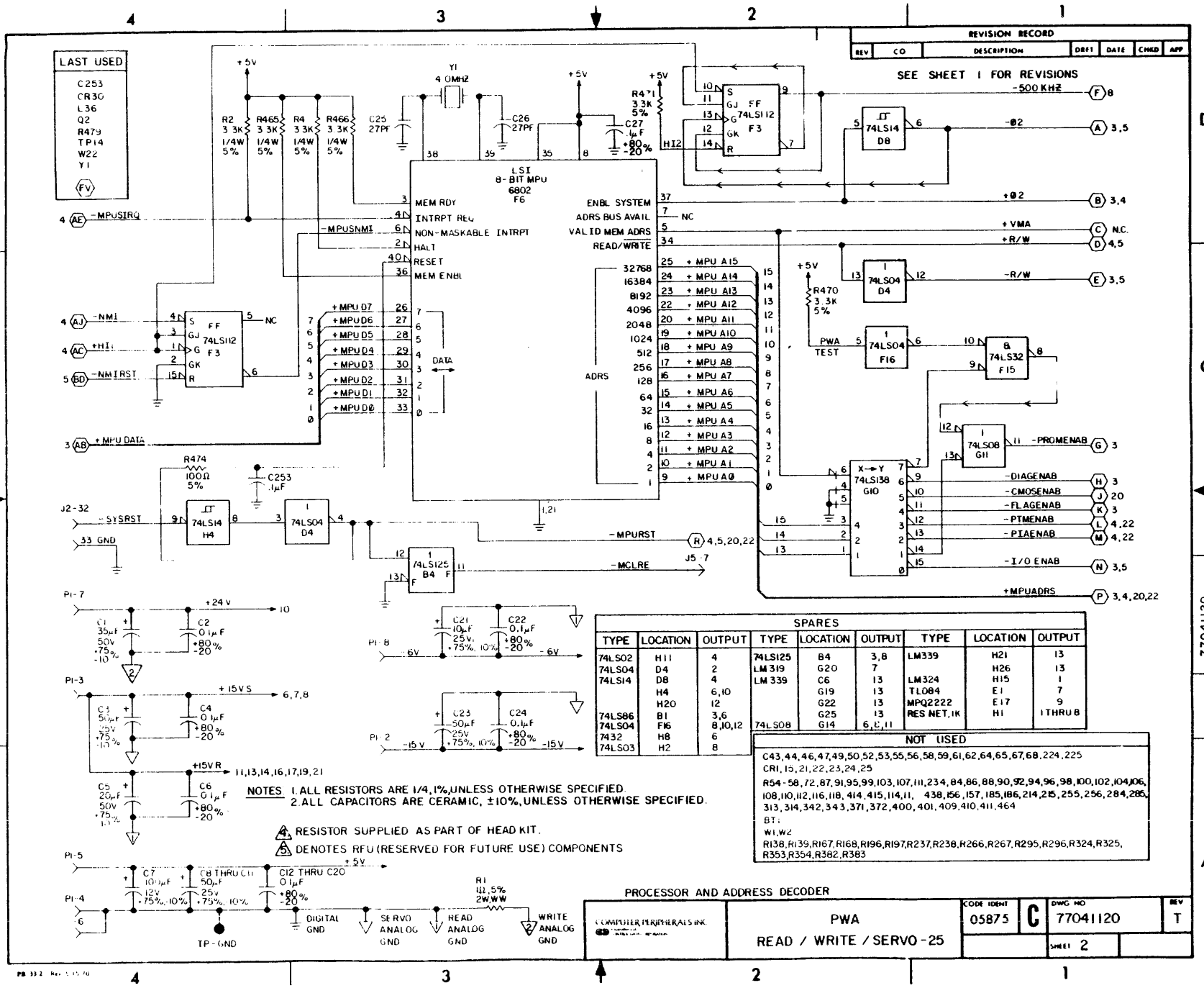

SPARES								
TYPE	LOCATION	OUTPUT	TYPE	LOCATION	OUTPUT	TYPE	LOCATION	OUTPUT
74LS02	H11	4	74LS125	B4	3,8	LM339	H21	13
74LS04	D4	2	LM319	G20	7		H26	13
74LS14	D8	4	LM339	C6	13	LM324	H15	1
	H4	6,10		G19	13	TL084	E1	7
	H20	12		G22	13	MPQ2222	E17	9
74LS86	B1	3,6		G25	13	RES NET, 1K	H1	1 THRU 8
74LS04	F16	8,10,12	74LS08	G14	6,8,11			
7432	H8	6						
74LS03	H2	8						

NOT USED

C43,44,46,47,49,50,52,53,55,56,58,59,61,62,64,65,67,68,224,225
CR1,15,21,22,23,24,25
R54-58,72,87,91,95,99,103,107,111,234,84,86,88,90,92,94,96,98,100,102,104,106,108,110,112,116,118,414,415,114,11, 438,156,157,185,186,214,215,255,256,284,285,313,314,342,343,371,372,400,401,409,410,411,464
BT1
W1,W2
R138,R139,R167,R168,R196,R197,R237,R238,R266,R267,R295,R296,R324,R325,R353,R354,R382,R383

NOTES 1. ALL RESISTORS ARE 1/4, 1%, UNLESS OTHERWISE SPECIFIED.
2. ALL CAPACITORS ARE CERAMIC, ±10%, UNLESS OTHERWISE SPECIFIED.

4 RESISTOR SUPPLIED AS PART OF HEAD KIT.
5 DENOTES RFU (RESERVED FOR FUTURE USE) COMPONENTS

PROCESSOR AND ADDRESS DECODER

COMPUTER PERIPHERALS INC.	PWA READ / WRITE / SERVO-25	CODE IDENT 05875	C	DWG NO 77041120	REV T
				SHEET 2	

77041120

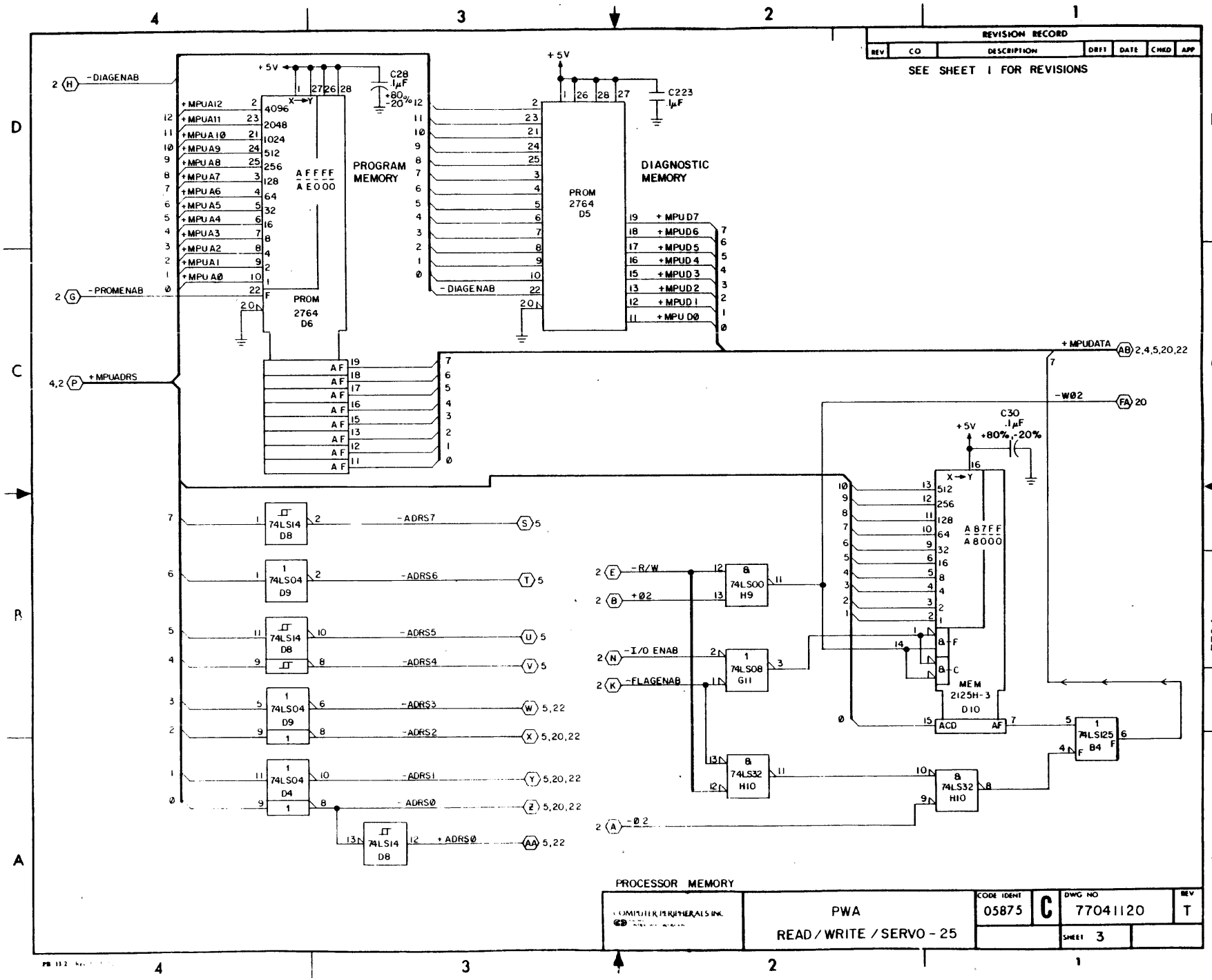
REVISION RECORD
REV | CO | DESCRIPTION | DRFT | DATE | CHKD | APP
SEE SHEET 1 FOR REVISIONS
PROGRAM MEMORY
PROM 2764 D6
A F F F F
A E 0 0 0
DIAGNOSTIC MEMORY
PROM 2764 D5
+5V
C28 1µF +80% -20%
C223 1µF
C30 .1µF +80%,-20%
-DIAGENAB
-PROMENAB
+MPUADRS
+MPUDATA
-W02
+MPUA12
+MPUA11
+MPUA10
+MPUA9
+MPUA8
+MPUA7
+MPUA6
+MPUA5
+MPUA4
+MPUA3
+MPUA2
+MPUA1
+MPUA0
+MPUD7
+MPUD6
+MPUD5
+MPUD4
+MPUD3
+MPUD2
+MPUD1
+MPUD0
74LS14 D8
74LS04 D9
74LS04 D4
74LS14 D8
-ADRS7
-ADRS6
-ADRS5
-ADRS4
-ADRS3
-ADRS2
-ADRS1
-ADRS0
+ADRS0
A B 7 F F
A 8 0 0 0
MEM 2125H-3 D10
ACD
AF
-R/W
+02
-I/O ENAB
-FLAGENAB
-02
74LS00 H9
74LS08 G11
74LS32 H10
74LS32 H10
74LS125 B4
PROCESSOR MEMORY
COMPUTER PERIPHERALS INC.
PWA
READ / WRITE / SERVO - 25
CODE IDENT 05875
C
DWG NO 77041120
REV T
SHEET 3

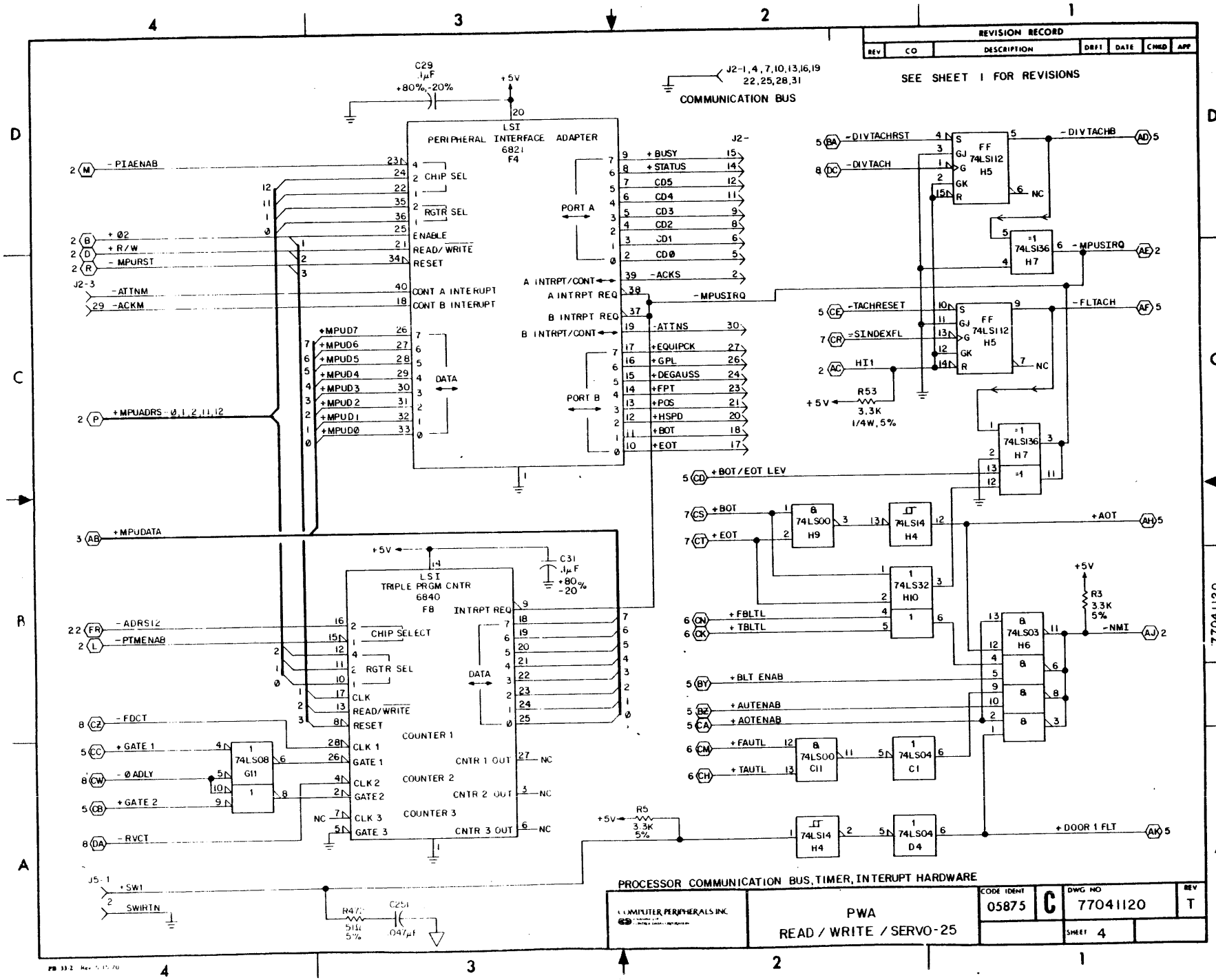
REVISION RECORD
REV | CO | DESCRIPTION | DRFT | DATE | CHKD | APP
SEE SHEET 1 FOR REVISIONS
C29 1μF +80%,-20%
+5V
J2-1,4,7,10,13,16,19 22,25,28,31
COMMUNICATION BUS
LSI PERIPHERAL INTERFACE ADAPTER 6821 F4
CHIP SEL
RGTR SEL
ENABLE
READ/WRITE
RESET
CONT A INTERUPT
CONT B INTERUPT
DATA
PORT A
PORT B
A INTRPT/CONT
A INTRPT REQ
B INTRPT REQ
B INTRPT/CONT
-PIAENAB
+Ø2
+R/W
-MPURST
-ATTNM
-ACKM
+MPUADRS - Ø,1,2,11,12
+MPUD7
+MPUD6
+MPUD5
+MPUD4
+MPUD3
+MPUD2
+MPUD1
+MPUDØ
+BUSY
+STATUS
CD5
CD4
CD3
CD2
CD1
CDØ
-ACKS
-MPUSIRQ
-ATTNS
+EQUIPCK
+GPL
+DEGAUSS
+FPT
+POS
+HSPD
+BOT
+EOT
-DIVTACHRST
-DIVTACH
FF 74LSI12 H5
-DIVTACHB
NC
=1 74LSI36 H7
-MPUSIRQ
-TACHRESET
=SINDEXFL
HI1
R53 3.3K 1/4W,5%
-FLTACH
+BOT/EOT LEV
+BOT
+EOT
8 74LS00 H9
74LSI4 H4
+AOT
1 74LS32 H10
+FBLTL
+TBLTL
+5V
R3 3.3K 5%
-NMI
8 74LS03 H6
+BLT ENAB
+AUTENAB
+AOTENAB
+FAUTL
+TAUTL
8 74LS00 C11
1 74LS04 C1
+DOOR 1 FLT
+MPUDATA
LSI TRIPLE PRGM CNTR 6840 F8
C31 .1μF +80% -20%
INTRPT REQ
CHIP SELECT
RGTR SEL
DATA
CLK
READ/WRITE
RESET
COUNTER 1
COUNTER 2
COUNTER 3
CLK 1
GATE 1
CNTR 1 OUT
CLK 2
GATE 2
CNTR 2 OUT
CLK 3
GATE 3
CNTR 3 OUT
-ADRSI2
-PTMENAB
-FDCT
+GATE 1
-ØADLY
+GATE 2
-RVCT
1 74LS08 G11
R5 3.3K 5%
1 74LS14 H4
1 74LS04 D4
J5-1
+SW1
SWIRTN
R47 510Ω 5%
C25 .047μF
PROCESSOR COMMUNICATION BUS, TIMER, INTERUPT HARDWARE
COMPUTER PERIPHERALS INC.
PWA
READ / WRITE / SERVO-25
CODE IDENT 05875
C
DWG NO 77041120
REV T
SHEET 4

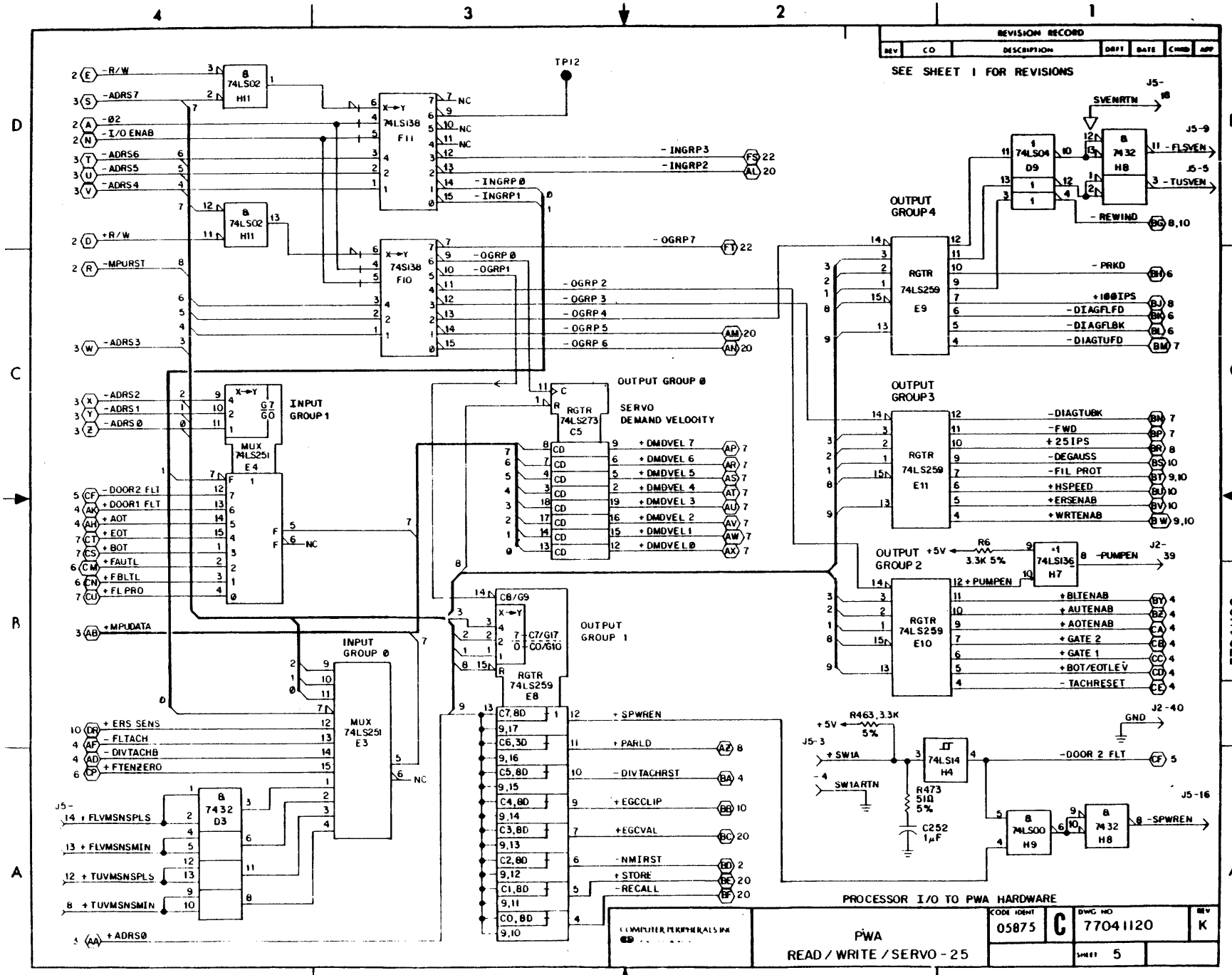
REVISION RECORD
SEE SHEET 1 FOR REVISIONS
PROCESSOR I/O TO PWA HARDWARE
PWA
READ / WRITE / SERVO - 25
CODE IDENT 05875
C
DWG NO 77041120
REV K
SHEET 5
77041120
INPUT GROUP 1
INPUT GROUP 0
OUTPUT GROUP 0
SERVO DEMAND VELOCITY
OUTPUT GROUP 1
OUTPUT GROUP 2
OUTPUT GROUP 3
OUTPUT GROUP 4
-R/W
-ADRS7
-Ø2
-I/O ENAB
-ADRS6
-ADRS5
-ADRS4
+R/W
-MPURST
-ADRS3
-ADRS2
-ADRS1
-ADRSØ
+MPUDATA
-DOOR2 FLT
+DOOR1 FLT
+AOT
+EOT
+BOT
+FAULTL
+FBLTL
+FL PRO
+ERS SENS
-FLTACH
-DIVTACHB
+FTENZERO
+ADRSØ
-INGRP3
-INGRP2
-INGRPØ
-INGRP1
-OGRP7
-OGRPØ
-OGRP1
-OGRP2
-OGRP3
-OGRP4
-OGRP5
-OGRP6
+DMDVEL 7
+DMDVEL 6
+DMDVEL 5
+DMDVEL 4
+DMDVEL 3
+DMDVEL 2
+DMDVEL 1
+DMDVEL Ø
+SPWREN
+PARLD
-DIVTACHRST
+EGCCLIP
+EGCVAL
-NMIRST
+STORE
-RECALL
-PRKD
+100IPS
-DIAGFLFD
-DIAGFLBK
-DIAGTUFD
-DIAGTUBK
-FWD
+25IPS
-DEGAUSS
-FIL PROT
+HSPEED
+ERSENAB
+WRTENAB
+PUMPEN
+BLTENAB
+AUTENAB
+AOTENAB
+GATE 2
+GATE 1
+BOT/EOTLEV
-TACHRESET
-DOOR 2 FLT
-SPWREN
+FLVMSNSPLS
+FLVMSNSMIN
+TUVMSNSPLS
+TUVMSNSMIN
+ADRSØ
SVENRTN
-FLSVEN
-TUSVEN
-REWIND
TP12
+5V
GND
+SW1A
SW1ARTN
R463, 3.3K 5%
R473 510 5%
C252 1µF
R6 3.3K 5%
74LS02 H11
74LS138 F11
74LS138 F10
74LS273 C5
74LS251 E4
74LS251 E3
74LS259 E8
74LS259 E9
74LS259 E10
74LS259 E11
74LS04 D9
74LS14 H4
74LS00 H9
74LS136 H7
7432 D3
7432 H8
7432 H8
INPUT GROUP 1
INPUT GROUP Ø
OUTPUT GROUP 1
OUTPUT GROUP 2
OUTPUT GROUP 3
OUTPUT GROUP 4

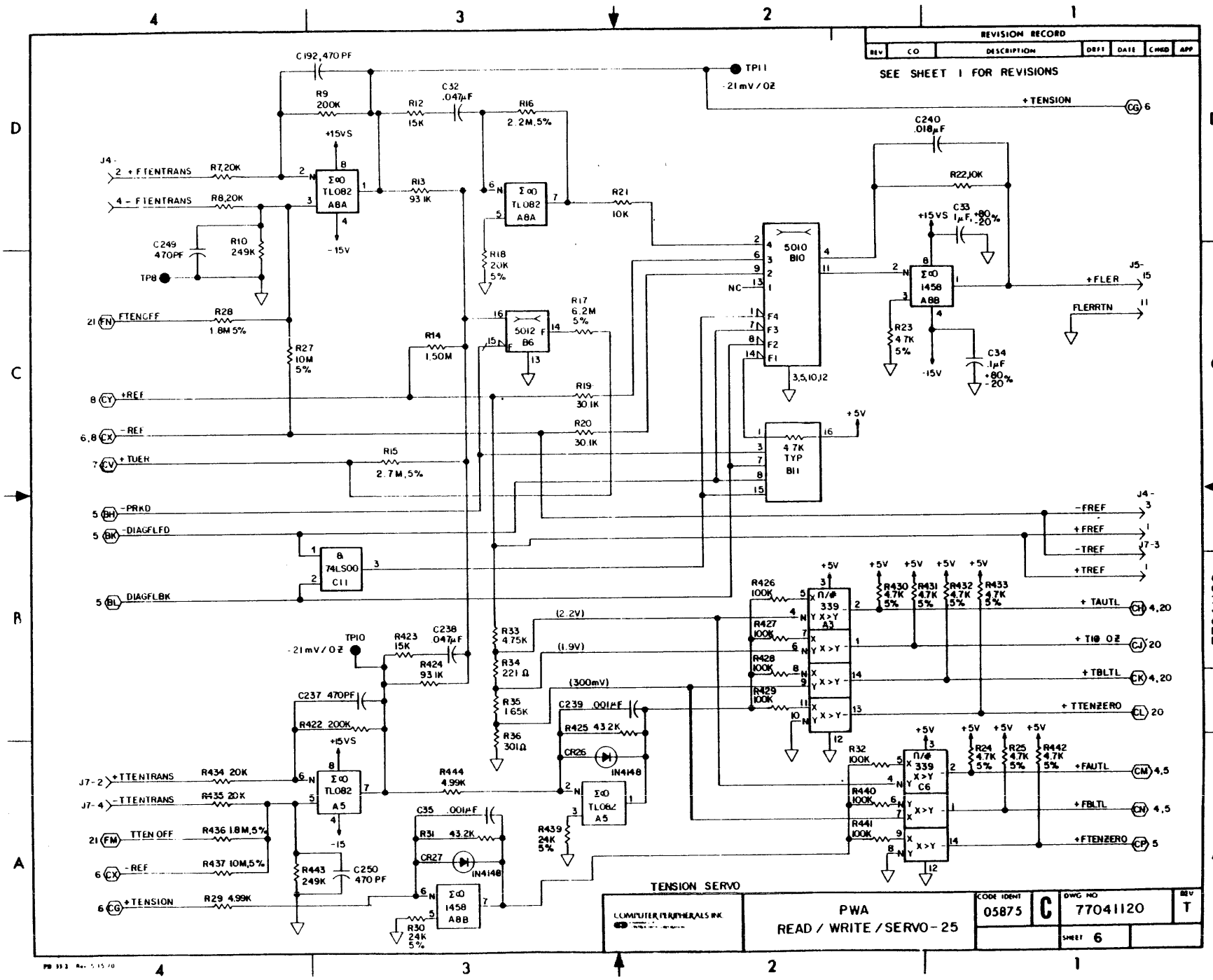
REVISION RECORD
REV CO DESCRIPTION DRFT DATE CHKD APP
SEE SHEET 1 FOR REVISIONS
TENSION SERVO
COMPUTER PERIPHERALS INC
PWA
READ / WRITE / SERVO-25
CODE IDENT 05875
C
DWG NO 77041120
REV T
SHEET 6
77041120
+TENSION
+FLER
FLERRTN
-FREF
+FREF
-TREF
+TREF
+TAUTL
+TIO OZ
+TBLTL
+TTENZERO
+FAUTL
+FBLTL
+FTENZERO
+FTENTRANS
-FTENTRANS
FTENOFF
+REF
-REF
+TUER
-PRKD
-DIAGFLFD
DIAGFLBK
+TTENTRANS
-TTENTRANS
TTEN OFF
-REF
+TENSION
TP11
-21mV/OZ
TP10
-21mV/OZ
TP8
TL082 A8A
TL082 A5
5010 B10
5012 B6
1458 A8B
74LS00 C11
339 A3
339 C6
4.7K TYP B11
+15VS
-15V
+5V
(2.2V)
(1.9V)
(300mV)
IN4148

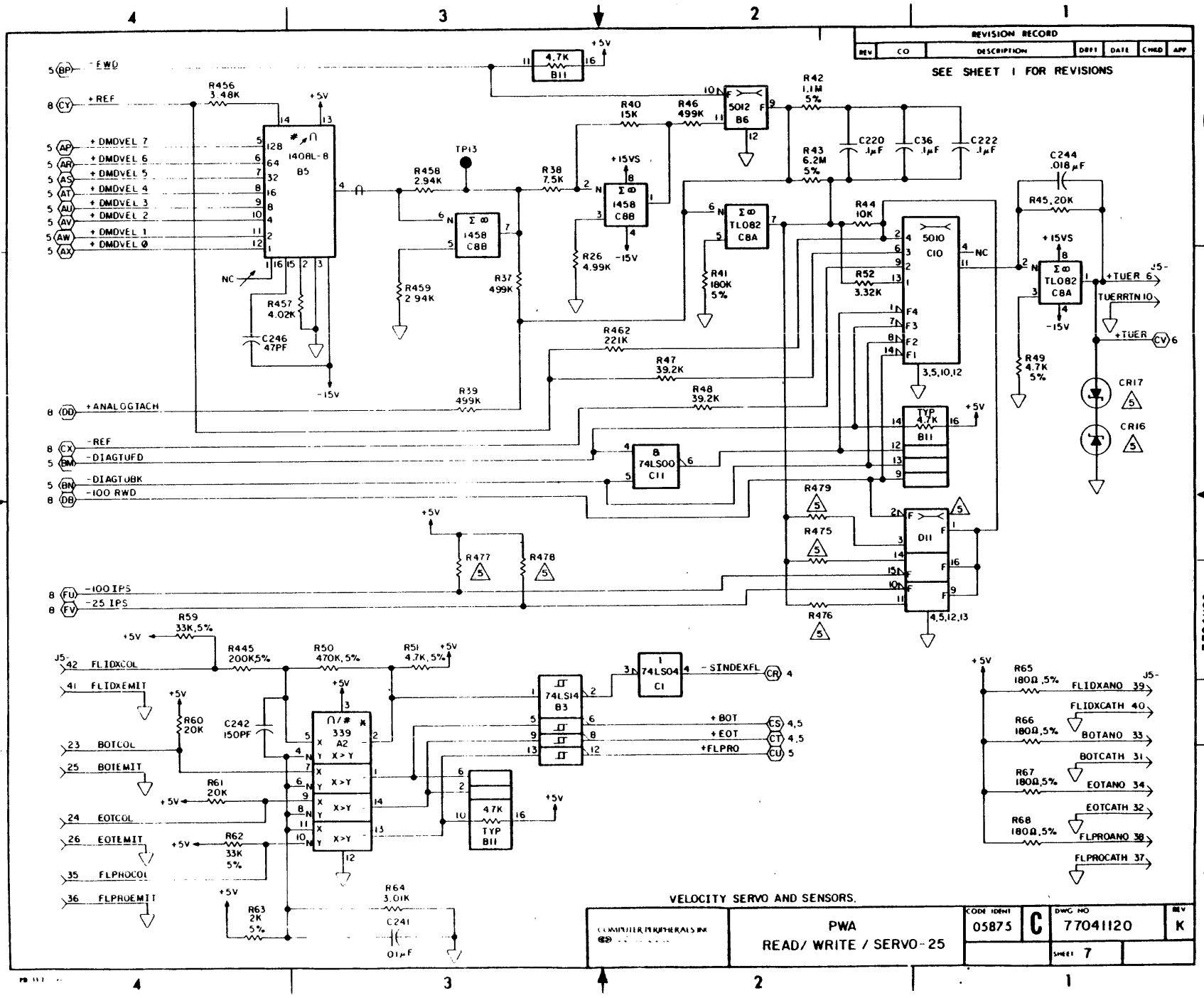
REVISION RECORD
SEE SHEET 1 FOR REVISIONS
VELOCITY SERVO AND SENSORS.
PWA
READ/ WRITE / SERVO-25
CODE IDENT 05875
DWG NO 77041120
REV K
SHEET 7
77041120
-FWD
+REF
+DMDVEL 7
+DMDVEL 6
+DMDVEL 5
+DMDVEL 4
+DMDVEL 3
+DMDVEL 2
+DMDVEL 1
+DMDVEL 0
+ANALOGTACH
-REF
-DIAGTUFD
-DIAGTUBK
-100 RWD
-100 IPS
-25 IPS
FLIDXCOL
FLIDXEMIT
BOTCOL
BOTEMIT
EOTCOL
EOTEMIT
FLPROCOL
FLPROEMIT
+TUER
TUERRTN
-SINDEXFL
+BOT
+EOT
+FLPRO
FLIDXANO
FLIDXCATH
BOTANO
BOTCATH
EOTANO
EOTCATH
FLPROANO
FLPROCATH
TP13
CR17
CR16

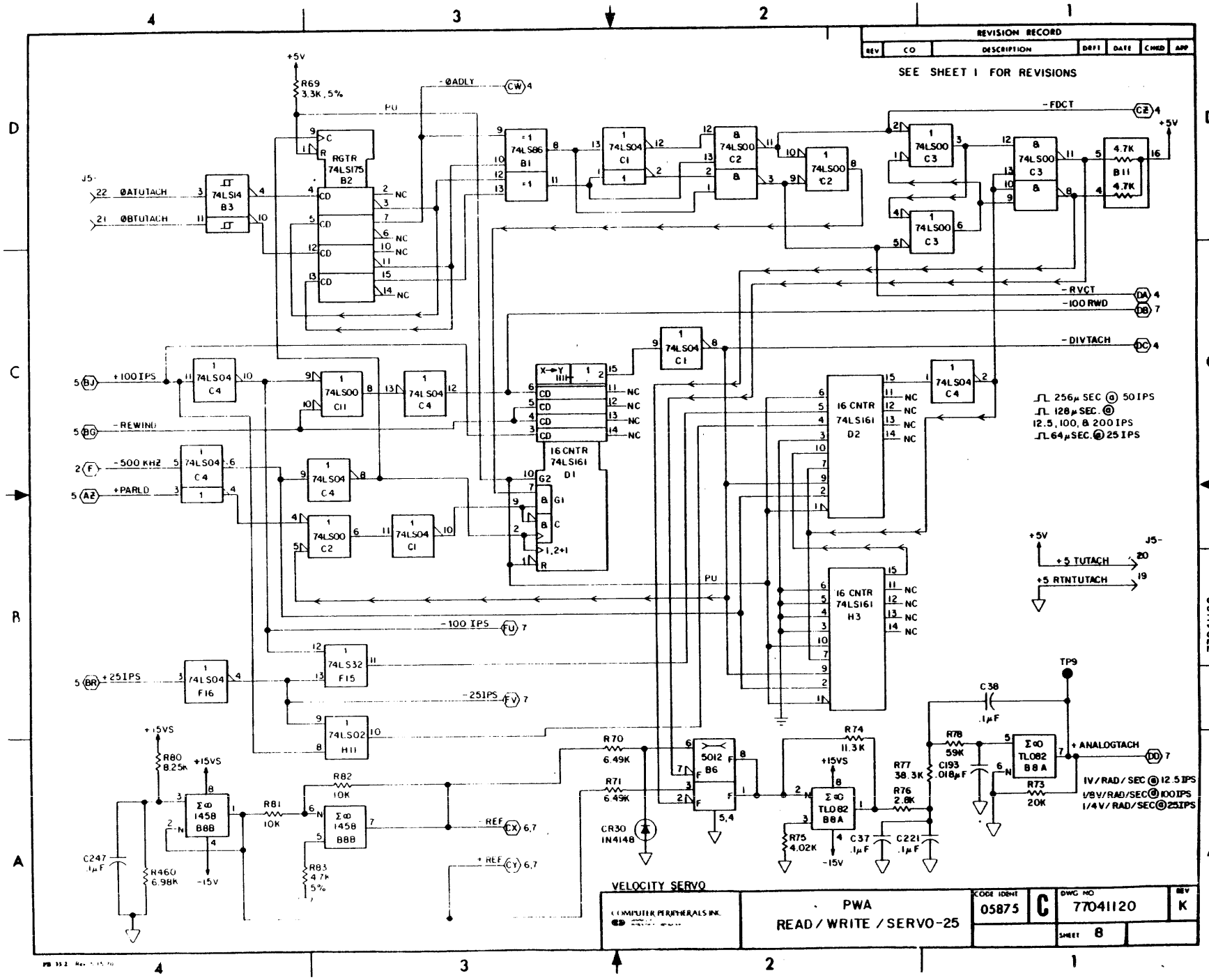
REVISION RECORD
REV
CO
DESCRIPTION
DRFT
DATE
CHKD
APP
SEE SHEET 1 FOR REVISIONS
+5V
R69 3.3K, 5%
PU
-ØADLY
-FDCT
-RVCT
-100 RWD
-DIVTACH
ØATUTACH
ØBTUTACH
RGTR 74LS175 B2
74LS14 B3
74LS86 B1
74LS04 C1
74LS00 C2
74LS00 C3
4.7K B11 4.7K
+100IPS
-REWIND
-500 KHZ
+PARLD
74LS04 C4
74LS00 C11
16 CNTR 74LS161 D1
16 CNTR 74LS161 D2
16 CNTR 74LS161 H3
256μ SEC @ 50 IPS
128μ SEC. @ 12.5, 100, & 200 IPS
64μ SEC. @ 25 IPS
+5 TUTACH
+5 RTNTUTACH
-100 IPS
+25IPS
-25IPS
74LS32 F15
74LS02 H11
74LS04 F16
+15VS
-15V
R80 8.25K
R82 10K
R81 10K
R83 4.7K 5%
R460 6.98K
C247 .1μF
Σ∞ 1458 B8B
R70 6.49K
R71 6.49K
5012 B6
CR30 IN4148
5,4
R74 11.3K
R75 4.02K
R76 2.8K
R77 38.3K
R78 59K
C193 .018μF
C37 .1μF
C221 .1μF
C38 .1μF
Σ∞ TL082 B8A
R73 20K
TP9
+ANALOGTACH
IV/RAD/SEC @ 12.5 IPS
1/8V/RAD/SEC @ 100 IPS
1/4V/RAD/SEC @ 25IPS
REF
+REF
VELOCITY SERVO
COMPUTER PERIPHERALS INC.
PWA
READ / WRITE / SERVO-25
CODE IDENT 05875
C
DWG NO 77041120
REV K
SHEET 8
77041120

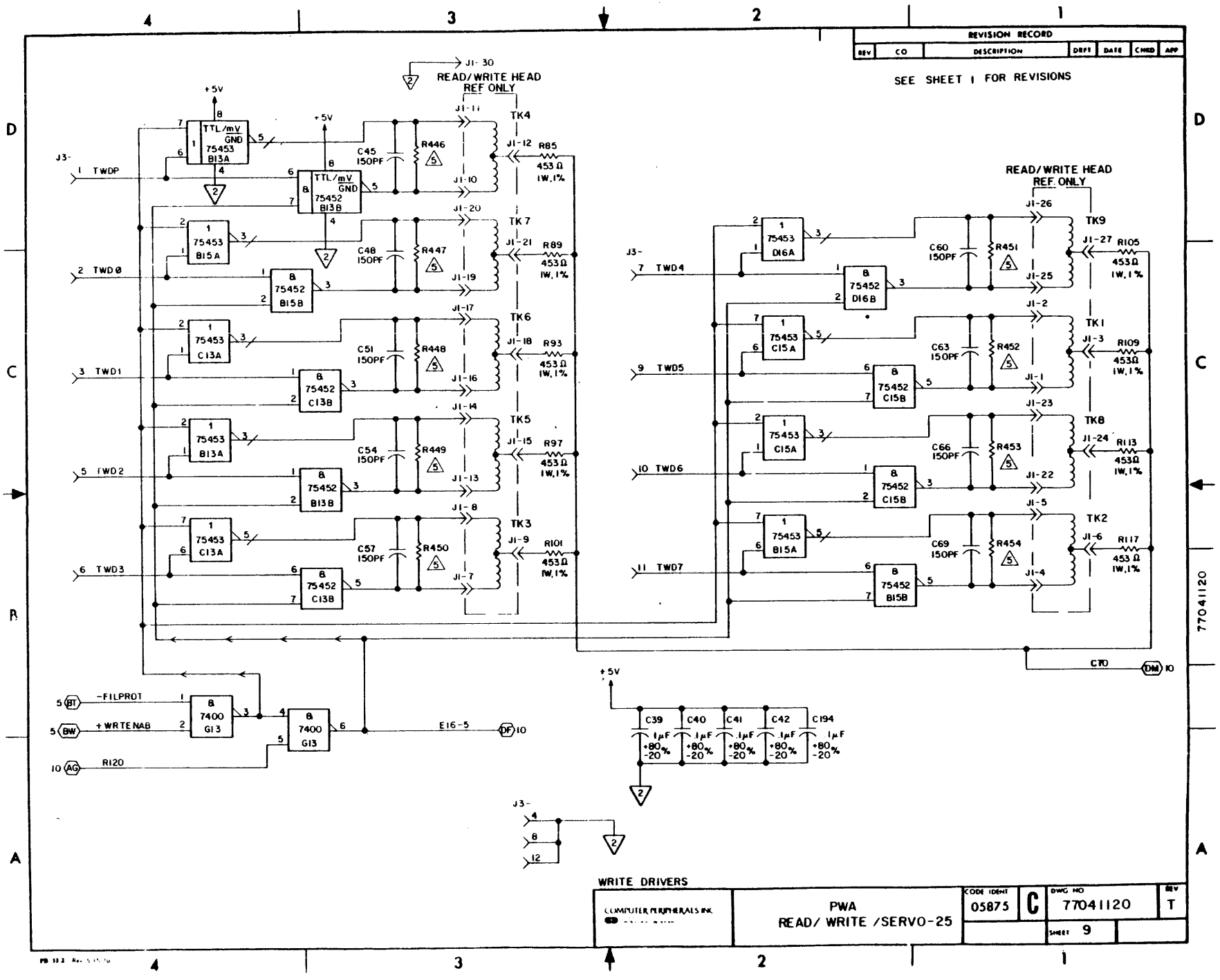
REVISION RECORD
REV | CO | DESCRIPTION | DRFT | DATE | CHKD | APP
SEE SHEET 1 FOR REVISIONS
READ/WRITE HEAD REF ONLY
J1-30
+5V
TTL/mV GND 75453 B13A
TTL/mV GND 75452 B13B
J3-
1 TWD0P
2 TWD0
3 TWD1
5 TWD2
6 TWD3
7 TWD4
9 TWD5
10 TWD6
11 TWD7
C45 150PF
C48 150PF
C51 150PF
C54 150PF
C57 150PF
C60 150PF
C63 150PF
C66 150PF
C69 150PF
R446
R447
R448
R449
R450
R451
R452
R453
R454
R85 453Ω 1W,1%
R89 453Ω 1W,1%
R93 453Ω 1W,1%
R97 453Ω 1W,1%
R101 453Ω 1W,1%
R105 453Ω 1W,1%
R109 453Ω 1W,1%
R113 453Ω 1W,1%
R117 453Ω 1W,1%
TK4
TK7
TK6
TK5
TK3
TK9
TK1
TK8
TK2
-FILPROT
+WRTENAB
R120
E16-5
C39 1μF +80% -20%
C40 1μF +80% -20%
C41 1μF +80% -20%
C42 1μF +80% -20%
C194 1μF +80% -20%
C170
WRITE DRIVERS
COMPUTER PERIPHERALS INC.
PWA READ/ WRITE /SERVO-25
CODE IDENT 05875
C
DWG NO 77041120
REV T
SHEET 9

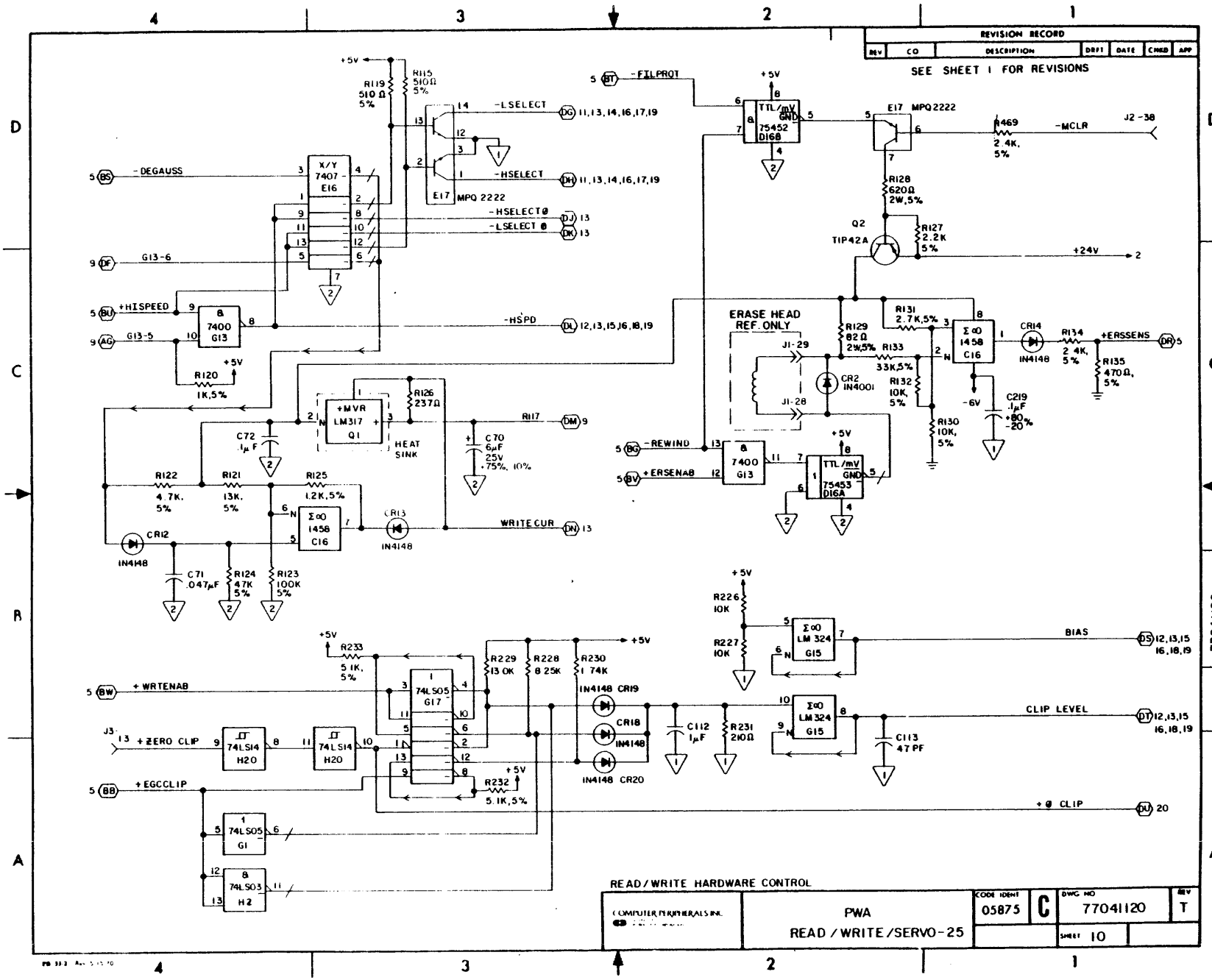
REVISION RECORD
REV | CO | DESCRIPTION | DRFT | DATE | CHKD | APP
SEE SHEET 1 FOR REVISIONS
-FILPROT
-LSELECT
-HSELECT
-HSELECTØ
-LSELECT Ø
-DEGAUSS
G13-6
+HISPEED
G13-5
-HSPD
+5V
R119 510Ω 5%
R115 510Ω 5%
X/Y 7407 - E16
E17 MPQ 2222
TTL/mV GND 75452 D16B
E17 MPQ2222
R469 2.4K, 5%
-MCLR
J2-38
R128 620Ω 2W,5%
Q2 TIP42A
R127 2.2K 5%
+24V
ERASE HEAD REF.ONLY
J1-29
J1-28
R129 82Ω 2W,5%
R133 33K,5%
R131 2.7K,5%
CR2 IN4001
R132 10K, 5%
R130 10K, 5%
-6V
C219 .1μF +80% -20%
CR14 IN4148
R134 2.4K 5%
+ERSSENS
R135 470Ω, 5%
-REWIND
+ERSENAB
7400 G13
TTL/mV GND 75453 D16A
R120 1K,5%
+MVR LM317 Q1
HEAT SINK
R126 237Ω
C72 .1μF
C70 6μF 25V +75%, 10%
R117
R122 4.7K, 5%
R121 13K, 5%
R125 1.2K,5%
CR12 IN4148
CR13 IN4148
WRITECUR
C71 .047μF
R124 47K 5%
R123 100K 5%
R226 10K
R227 10K
LM 324 G15
BIAS
+WRTENAB
R233 5.1K, 5%
74LS05 G17
R229 13.0K
R228 8.25K
R230 1.74K
IN4148 CR19
CR18 IN4148
IN4148 CR20
C112 .1μF
R231 2KΩ
CLIP LEVEL
C113 47 PF
+ZERO CLIP
74LS14 H20
74LS14 H20
+EGCCLIP
R232 5.1K,5%
+Ø CLIP
74LS05 G1
74LS03 H2
READ/WRITE HARDWARE CONTROL
COMPUTER PERIPHERALS INC.
PWA
READ / WRITE/SERVO-25
CODE IDENT 05875
C
DWG NO 77041120
REV T
SHEET 10
77041120

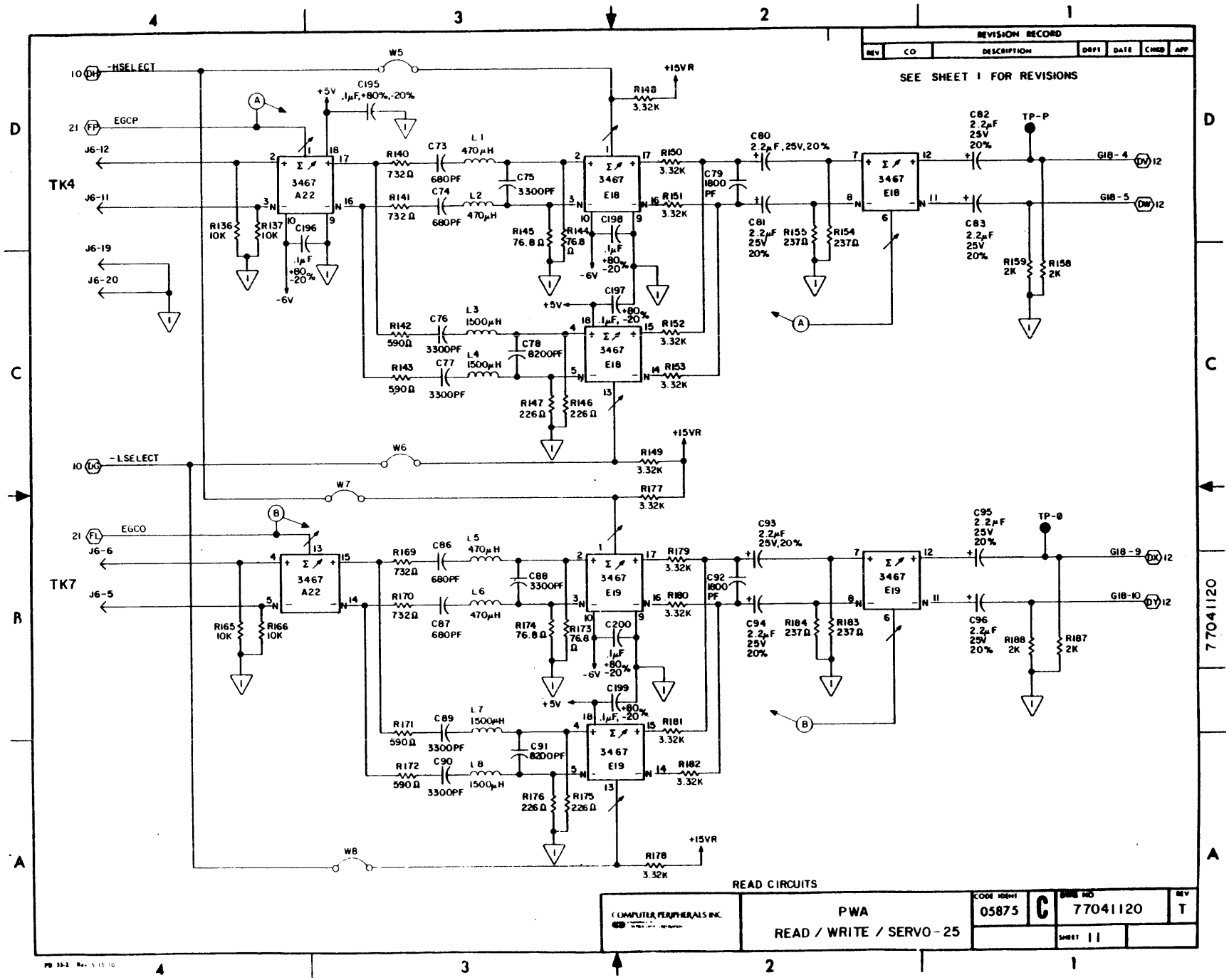
REVISION RECORD
REV
CO
DESCRIPTION
DRFT
DATE
CHKD
APP
SEE SHEET 1 FOR REVISIONS
-HSELECT
EGCP
J6-12
J6-11
J6-19
J6-20
TK4
-LSELECT
EGCO
J6-6
J6-5
TK7
W5
W6
W7
W8
+15VR
+5V
-6V
C195 .1μF,+80%,-20%
3467 A22
3467 E18
3467 E19
C196
C197
C198
C199
C200
C73
C74
C75
C76
C77
C78
C86
C87
C88
C89
C90
C91
C80 2.2μF,25V,20%
C81 2.2μF 25V 20%
C82 2.2μF 25V 20%
C83 2.2μF 25V 20%
C93 2.2μF 25V,20%
C94 2.2μF 25V 20%
C95 2.2μF 25V 20%
C96 2.2μF 25V 20%
C79 1800 PF
C92 1800 PF
TP-P
TP-0
G18-4
G18-5
G18-9
G18-10
READ CIRCUITS
COMPUTER PERIPHERALS INC.
PWA
READ / WRITE / SERVO-25
05875
C
77041120
T
SHEET 11

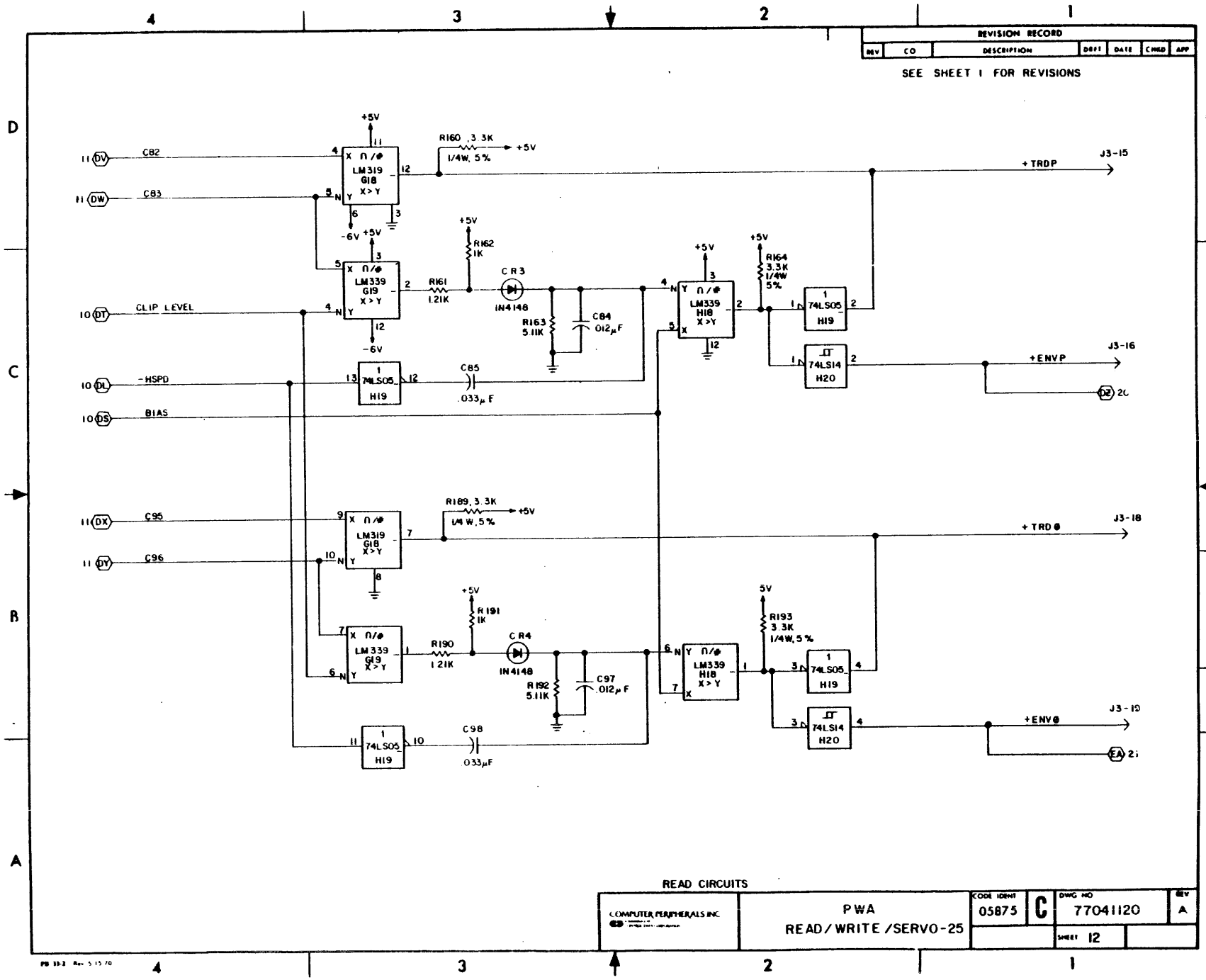
REVISION RECORD
REV CO DESCRIPTION DRFT DATE CHKD APP
SEE SHEET 1 FOR REVISIONS
+5V
R160 3.3K
1/4W, 5%
+TRDP
J3-15
C82
C83
LM319 G18 X>Y
LM339 G19 X>Y
LM339 H18 X>Y
R162 1K
R161 1.21K
CR3
IN4148
R163 5.11K
C84 .012μF
R164 3.3K 1/4W 5%
74LS05 H19
74LS14 H20
+ENVP
J3-16
CLIP LEVEL
-HSPD
BIAS
C85 .033μF
C95
C96
R189, 3.3K
1/4W, 5%
+TRD@
J3-18
R191 1K
R190 1.21K
CR4
R192 5.11K
C97 .012μF
R193 3.3K 1/4W, 5%
+ENV@
J3-10
C98 .033μF
-6V
READ CIRCUITS
COMPUTER PERIPHERALS INC.
PWA
READ/WRITE/SERVO-25
CODE IDENT 05875
C
DWG NO 77041120
REV A
SHEET 12

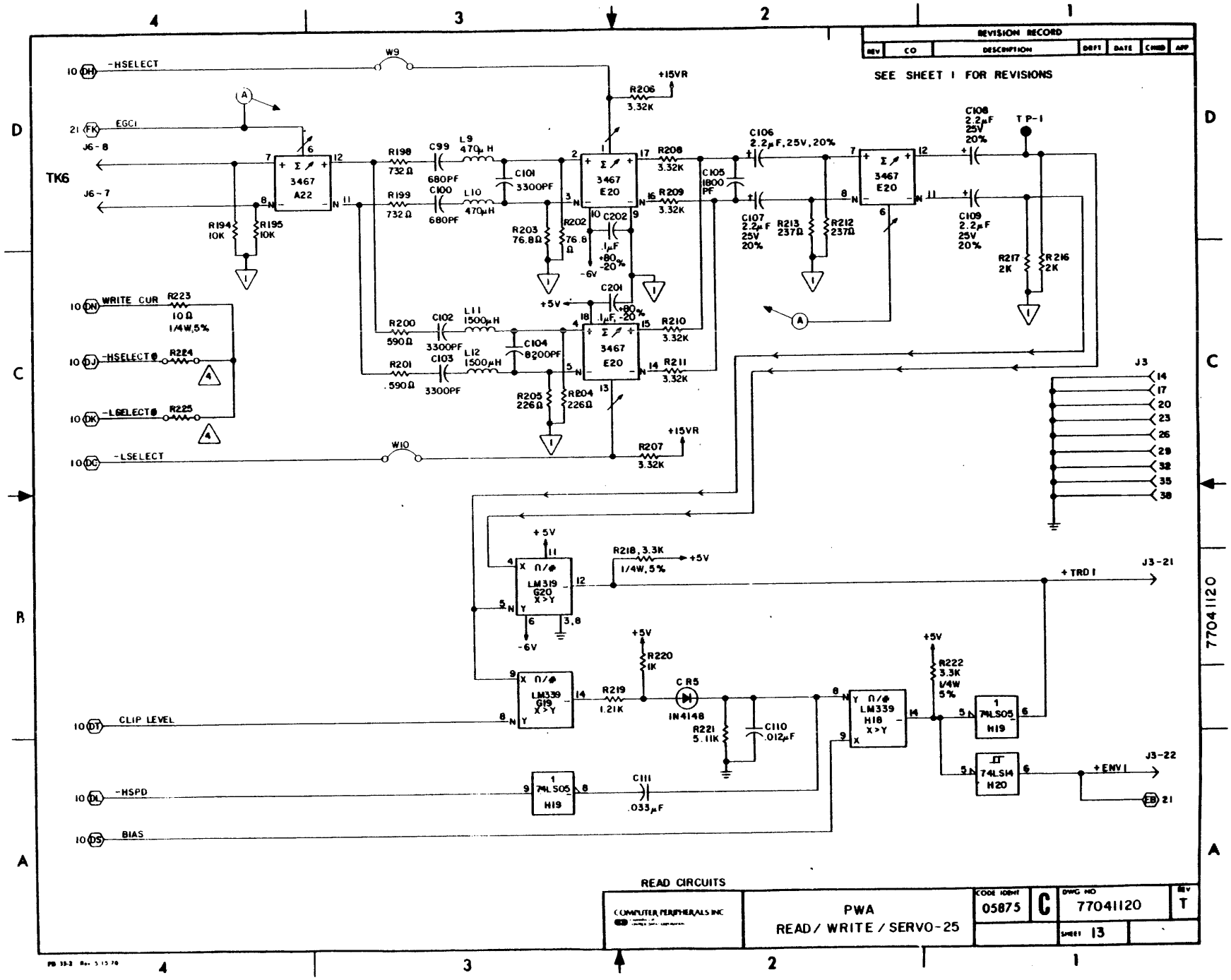
REVISION RECORD
REV
CO
DESCRIPTION
DRFT
DATE
CHKD
APP
SEE SHEET 1 FOR REVISIONS
-HSELECT
EGC1
J6-8
J6-7
TK6
WRITE CUR
-HSELECT@
-LSELECT@
-LSELECT
CLIP LEVEL
-HSPD
BIAS
W9
W10
+15VR
+5V
-6V
3467 A22
3467 E20
LM319 G20 X>Y
LM339 G19 X>Y
LM339 H18 X>Y
74LS05 H19
74LS14 H20
CR5 1N4148
TP-1
J3
J3-21
J3-22
+TRD1
+ENV1
READ CIRCUITS
COMPUTER PERIPHERALS INC
PWA
READ/ WRITE / SERVO-25
CODE IDENT 05875
C
DWG NO 77041120
REV T
SHEET 13
77041120

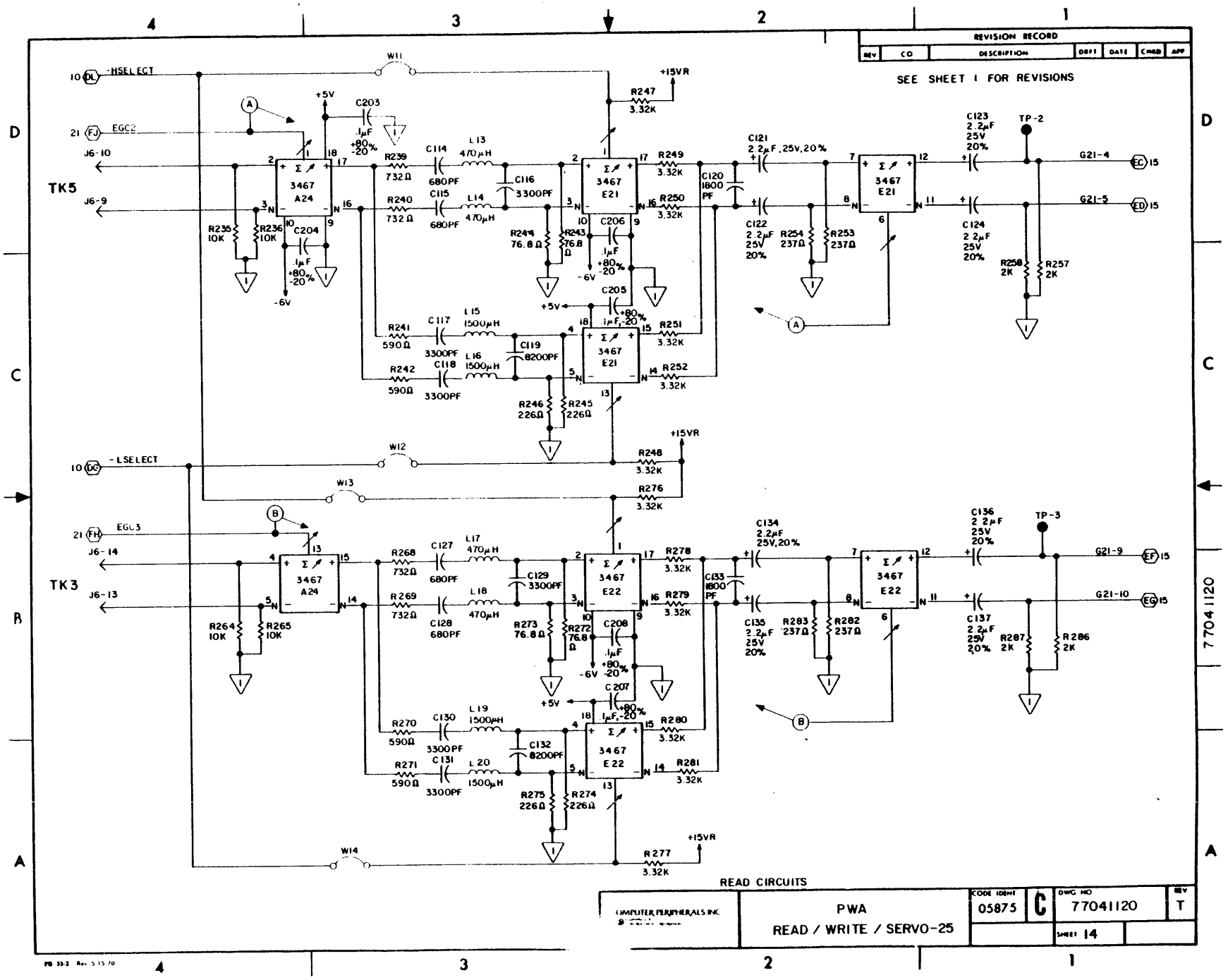
REVISION RECORD
REV
CO
DESCRIPTION
DRFT
DATE
CHKD
APP
SEE SHEET 1 FOR REVISIONS
-HSELECT
-LSELECT
EGC2
EGC3
J6-10
J6-9
J6-14
J6-13
TK5
TK3
3467 A24
3467 E21
3467 E22
+5V
+15VR
-6V
W11
W12
W13
W14
TP-2
TP-3
G21-4
G21-5
G21-9
G21-10
READ CIRCUITS
COMPUTER PERIPHERALS INC.
PWA
READ / WRITE / SERVO-25
CODE IDENT
05875
C
DWG NO
77041120
REV
T
SHEET 14

REVISION RECORD						
REV	CO	DESCRIPTION	DRFT	DATE	CHKD	APP

SEE SHEET 1 FOR REVISIONS

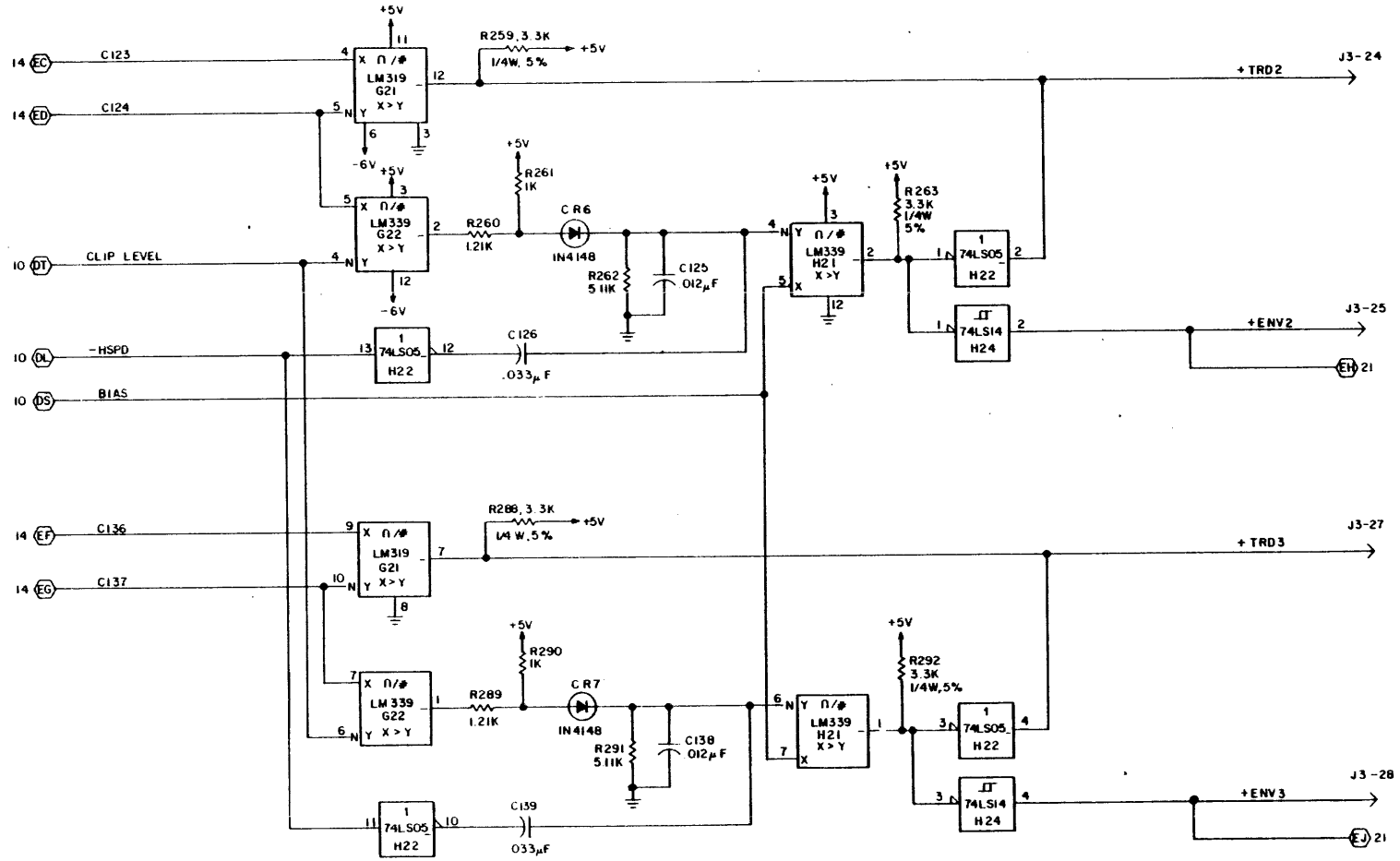

READ CIRCUITS

COMPUTER PERIPHERALS INC.	PWA READ/WRITE/SERVO-25	CODE IDENT 05875	C	DWG NO 77041120	REV A
				SHEET 15	

77041120

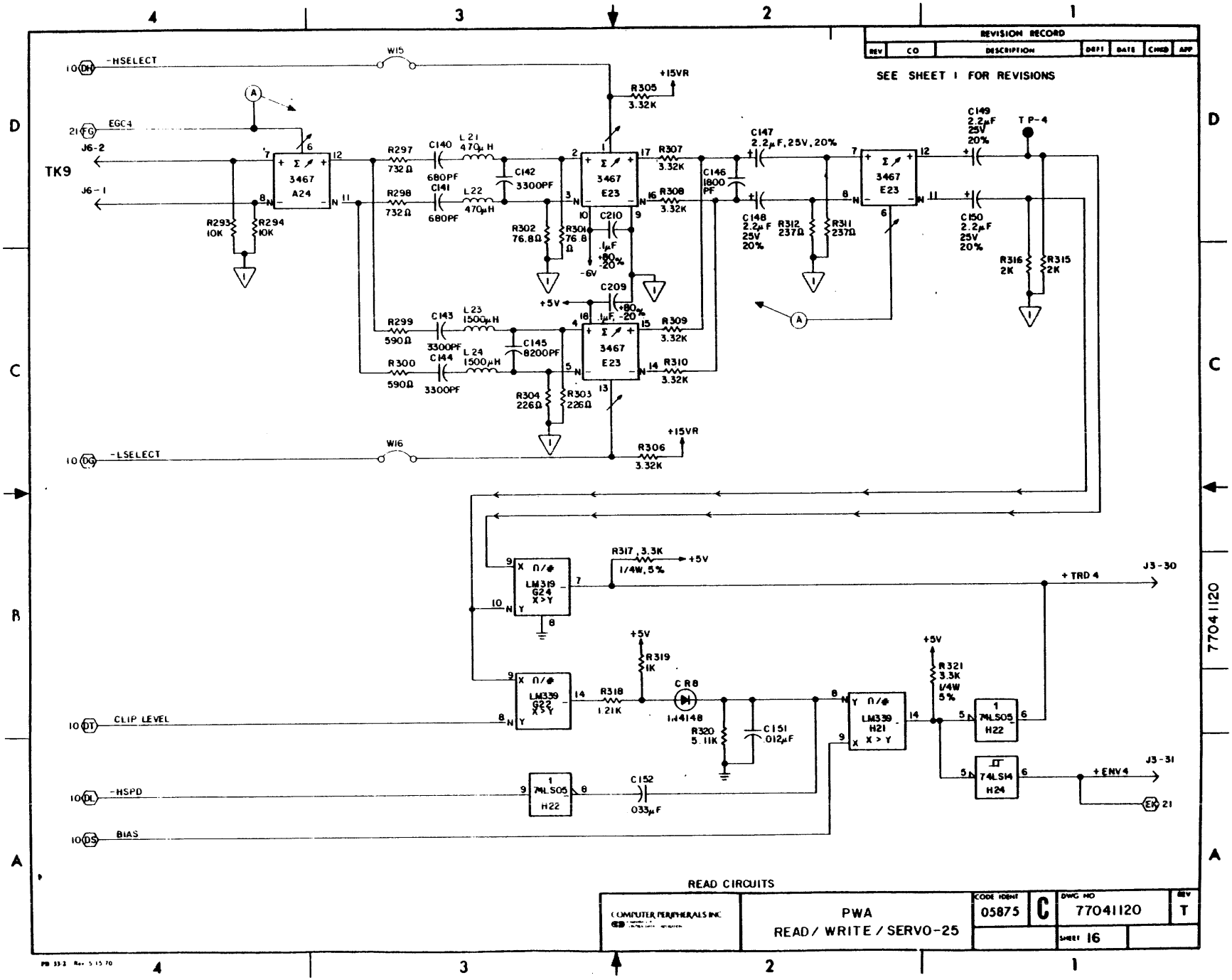
REVISION RECORD
REV
CO
DESCRIPTION
DRFT
DATE
CHKD
APP
SEE SHEET 1 FOR REVISIONS
-HSELECT
-LSELECT
EGC4
J6-2
J6-1
TK9
W15
W16
+15VR
R305 3.32K
R306 3.32K
3467 A24
3467 E23
R297 732Ω
R298 732Ω
C140 680PF
C141 680PF
L21 470μH
L22 470μH
C142 3300PF
R293 10K
R294 10K
R302 76.8Ω
R304 76.8Ω
C210 .1μF +80% -20%
-6V
+5V
C209 .1μF +80% -20%
R307 3.32K
R308 3.32K
C146 1800 PF
C147 2.2μF, 25V, 20%
C148 2.2μF 25V 20%
R312 237Ω
R311 237Ω
C149 2.2μF 25V 20%
C150 2.2μF 25V 20%
TP-4
R316 2K
R315 2K
R299 590Ω
R300 590Ω
C143 3300PF
C144 3300PF
L23 1500μH
L24 1500μH
C145 8200PF
R304 226Ω
R303 226Ω
R309 3.32K
R310 3.32K
R317 3.3K 1/4W, 5%
LM339 G24 X>Y
LM339 G22 X<Y
LM339 H21 X>Y
+TRD4
J3-30
R319 1K
R318 1.21K
CR8 1N4148
R320 5.11K
C151 .012μF
R321 3.3K 1/4W 5%
74LS05 H22
74LS14 H24
+ENV4
J3-31
CLIP LEVEL
-HSPD
BIAS
C152 .033μF
READ CIRCUITS
COMPUTER PERIPHERALS INC
PWA
READ/ WRITE / SERVO-25
CODE IDENT 05875
C
DWG NO 77041120
REV T
SHEET 16

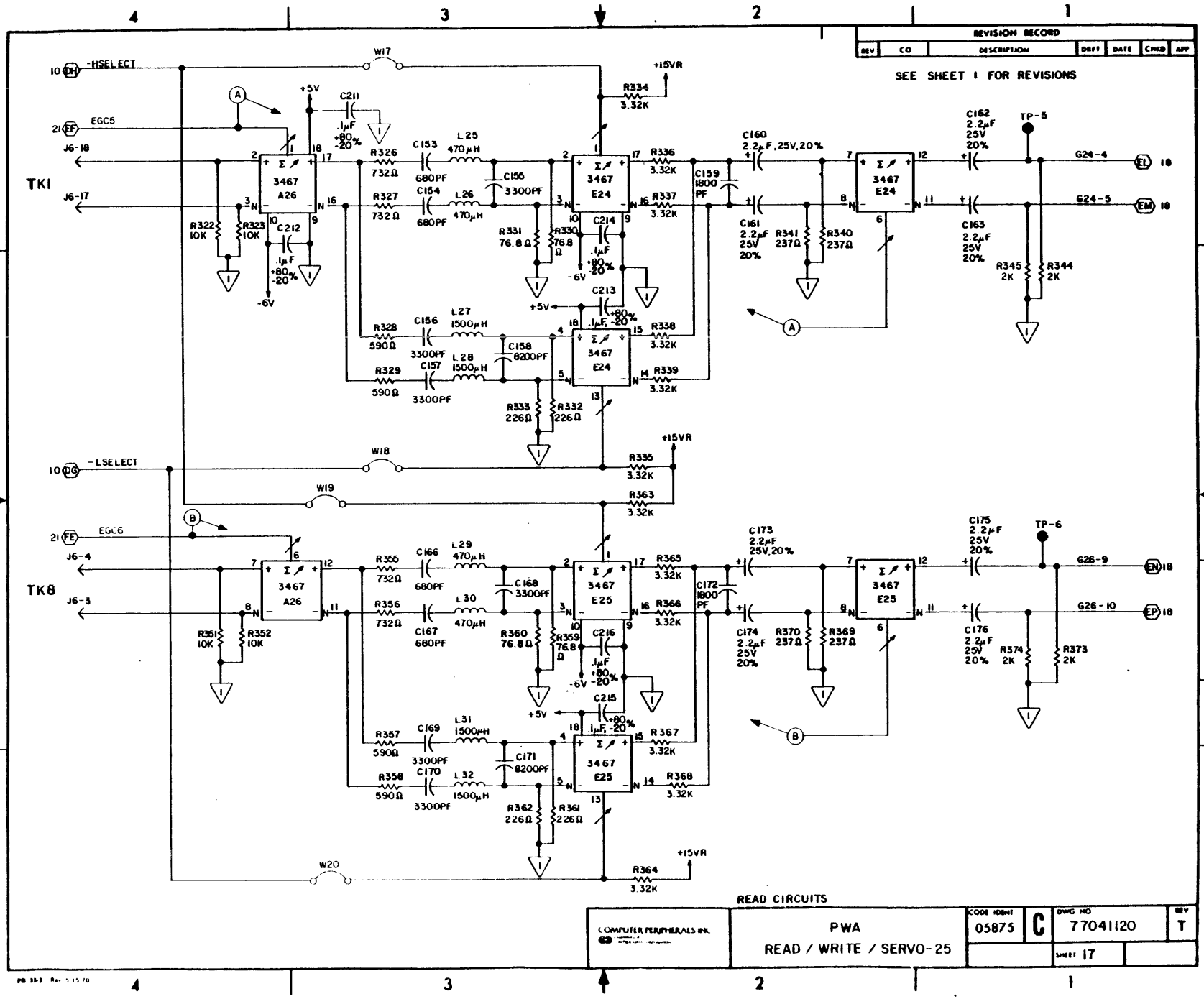
REVISION RECORD
REV | CO | DESCRIPTION | DRFT | DATE | CHKD | APP
SEE SHEET 1 FOR REVISIONS
-HSELECT
-LSELECT
EGC5
EGC6
J6-18
J6-17
J6-4
J6-3
TK1
TK8
W17
W18
W19
W20
+15VR
+5V
-6V
3467 A26
3467 E24
3467 E25
TP-5
TP-6
G24-4
G24-5
G26-9
G26-10
READ CIRCUITS
COMPUTER PERIPHERALS INC.
PWA
READ / WRITE / SERVO-25
CODE IDENT 05875
C
DWG NO 77041120
REV T
SHEET 17

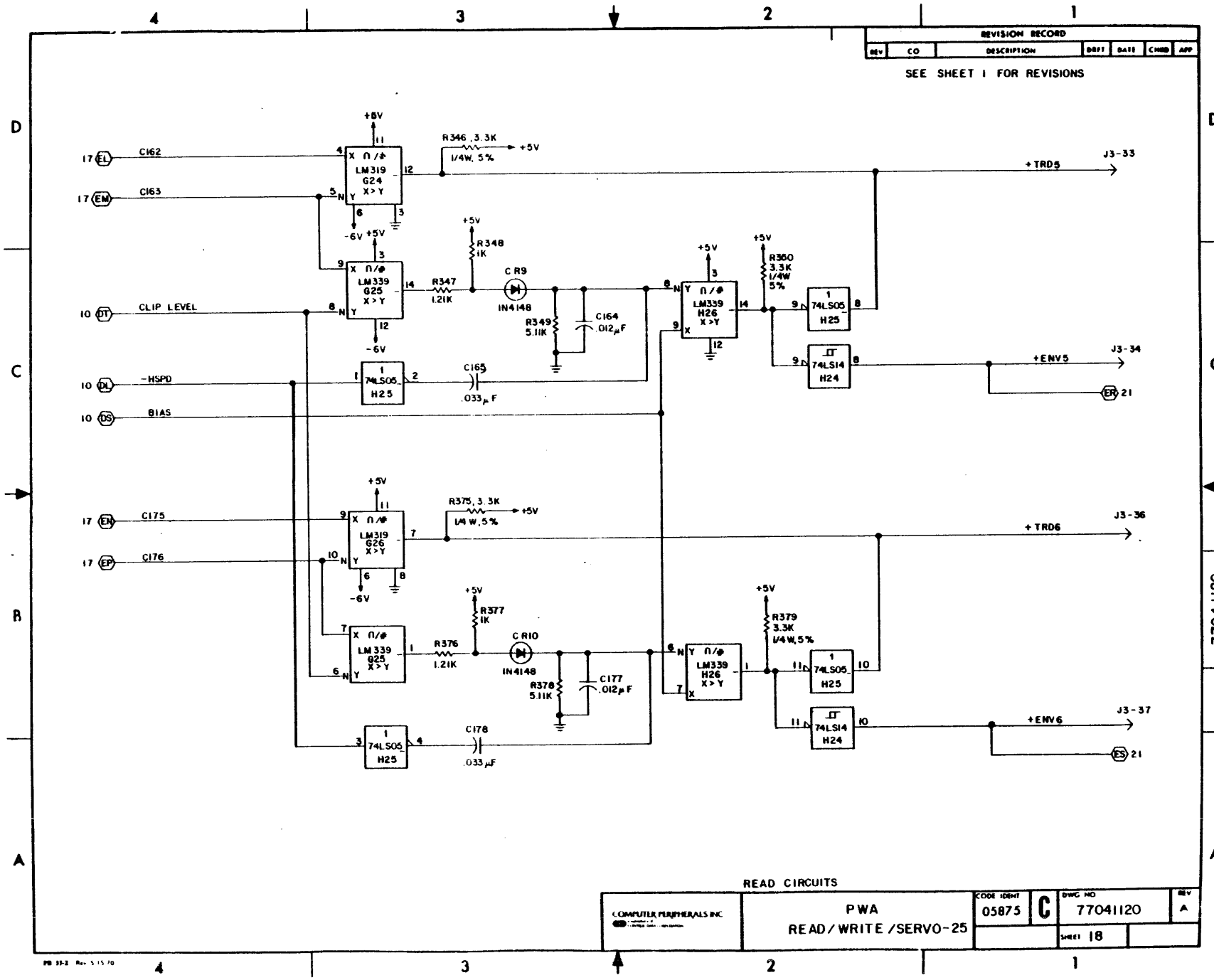
REVISION RECORD
REV | CO | DESCRIPTION | DRFT | DATE | CHKD | APP
SEE SHEET 1 FOR REVISIONS
+8V
R346, 3.3K
1/4W, 5%
+5V
+TRD5
J3-33
17 EL C162
17 EM C163
LM319 G24 X>Y
-6V
R348 1K
CR9
IN4148
R347 1.21K
R349 5.11K
C164 .012μF
LM339 G25 X>Y
LM339 H26 X>Y
R360 3.3K 1/4W 5%
74LS05 H25
74LS14 H24
10 DT CLIP LEVEL
10 DL -HSPD
C165 .033μF
+ENV5
J3-34
ER 21
10 DS BIAS
17 EN C175
17 EP C176
R375, 3.3K
1/4W, 5%
+TRD6
J3-36
R377 1K
CR10
R376 1.21K
R378 5.11K
C177 .012μF
R379 3.3K 1/4W, 5%
C178 .033μF
+ENV6
J3-37
ES 21
READ CIRCUITS
COMPUTER PERIPHERALS INC.
PWA
READ/WRITE /SERVO-25
CODE IDENT 05875
C
DWG NO 77041120
REV A
SHEET 18

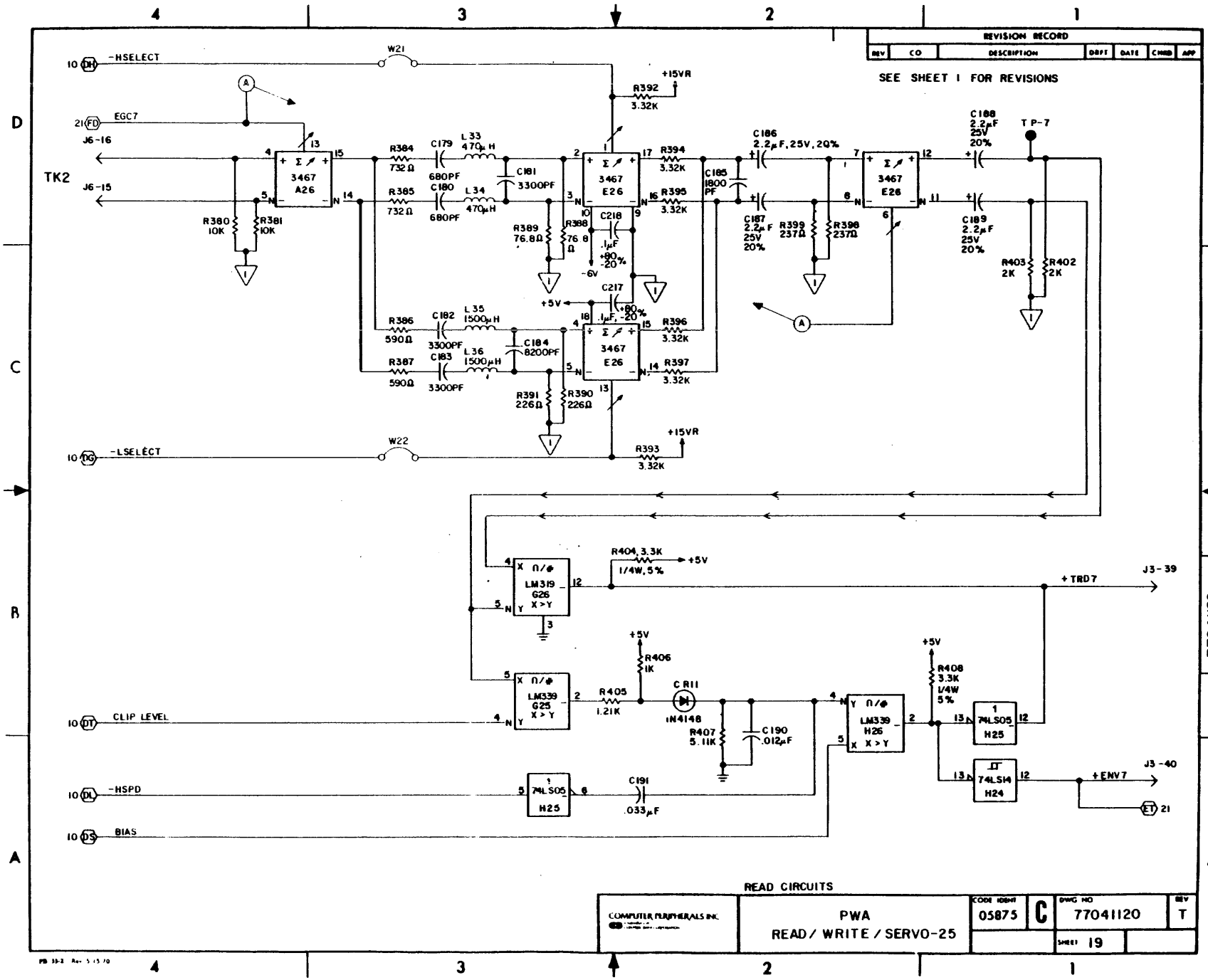
REVISION RECORD
REV
CO
DESCRIPTION
DRFT
DATE
CHKD
APP
SEE SHEET 1 FOR REVISIONS
-HSELECT
W21
+15VR
R392
3.32K
EGC7
J6-16
J6-15
TK2
3467
A26
3467
E26
R384
732Ω
C179
680PF
L33
470μH
C181
3300PF
R385
732Ω
C180
680PF
L34
470μH
R380
10K
R381
10K
R389
76.8Ω
R388
76.8Ω
C218
.1μF
+80%
-20%
-6V
C217
+5V
C185
1800 PF
C186
2.2μF, 25V, 20%
C187
2.2μF
25V
20%
R399
237Ω
R398
237Ω
C188
2.2μF
25V
20%
TP-7
C189
2.2μF
25V
20%
R403
2K
R402
2K
R394
3.32K
R395
3.32K
R386
590Ω
C182
3300PF
L35
1500μH
C184
8200PF
R387
590Ω
C183
3300PF
L36
1500μH
R391
226Ω
R390
226Ω
R396
3.32K
R397
3.32K
-LSELECT
W22
R393
3.32K
LM319
G26
X>Y
R404, 3.3K
1/4W, 5%
+5V
+TRD7
J3-39
LM339
G25
X>Y
R406
1K
R405
1.21K
CR11
1N4148
R407
5.11K
C190
.012μF
CLIP LEVEL
LM339
H26
X>Y
R408
3.3K
1/4W
5%
74LS05
H25
74LS14
H24
+ENV7
J3-40
-HSPD
C191
.033μF
BIAS
READ CIRCUITS
COMPUTER PERIPHERALS INC.
PWA
READ/WRITE/SERVO-25
CODE IDENT
05875
C
DWG NO
77041120
REV
T
SHEET 19

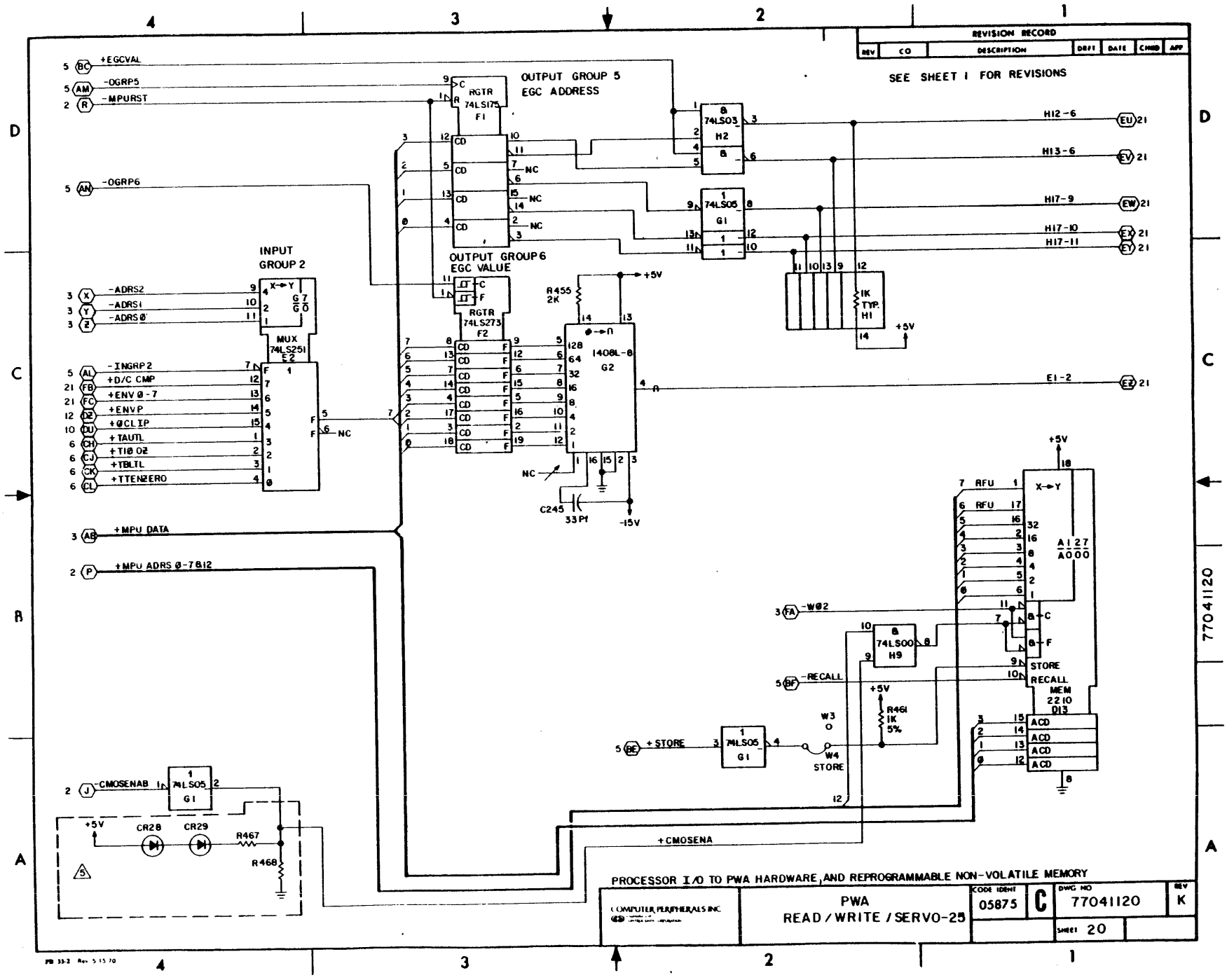
REVISION RECORD
REV
CO
DESCRIPTION
DRFT
DATE
CHKD
APP
SEE SHEET 1 FOR REVISIONS
+EGCVAL
-OGRP5
-MPURST
-OGRP6
OUTPUT GROUP 5
EGC ADDRESS
RGTR
74LS175
F1
OUTPUT GROUP6
EGC VALUE
RGTR
74LS273
F2
INPUT
GROUP 2
-ADRS2
-ADRS1
-ADRS0
MUX
74LS251
E2
-INGRP2
+D/C CMP
+ENV 0-7
+ENVP
+0CLIP
+TAUTL
+TI0 02
+TBLTL
+TTEN2ERO
+MPU DATA
+MPU ADRS 0-7812
-CMOSENAB
+CMOSENA
+5V
CR28
CR29
R467
R468
R455
2K
1408L-8
G2
C245
33 Pf
-15V
IK
TYP.
HI
H12-6
H13-6
H17-9
H17-10
H17-11
E1-2
-W02
-RECALL
+STORE
W3
O
W4
STORE
R461
IK
5%
STORE
RECALL
MEM
2210
D13
A127
A000
ACD
RFU
PROCESSOR I/O TO PWA HARDWARE, AND REPROGRAMMABLE NON-VOLATILE MEMORY
COMPUTER PERIPHERALS INC
PWA
READ / WRITE / SERVO-25
CODE IDENT
05875
C
DWG NO
77041120
REV
K
SHEET 20
77041120

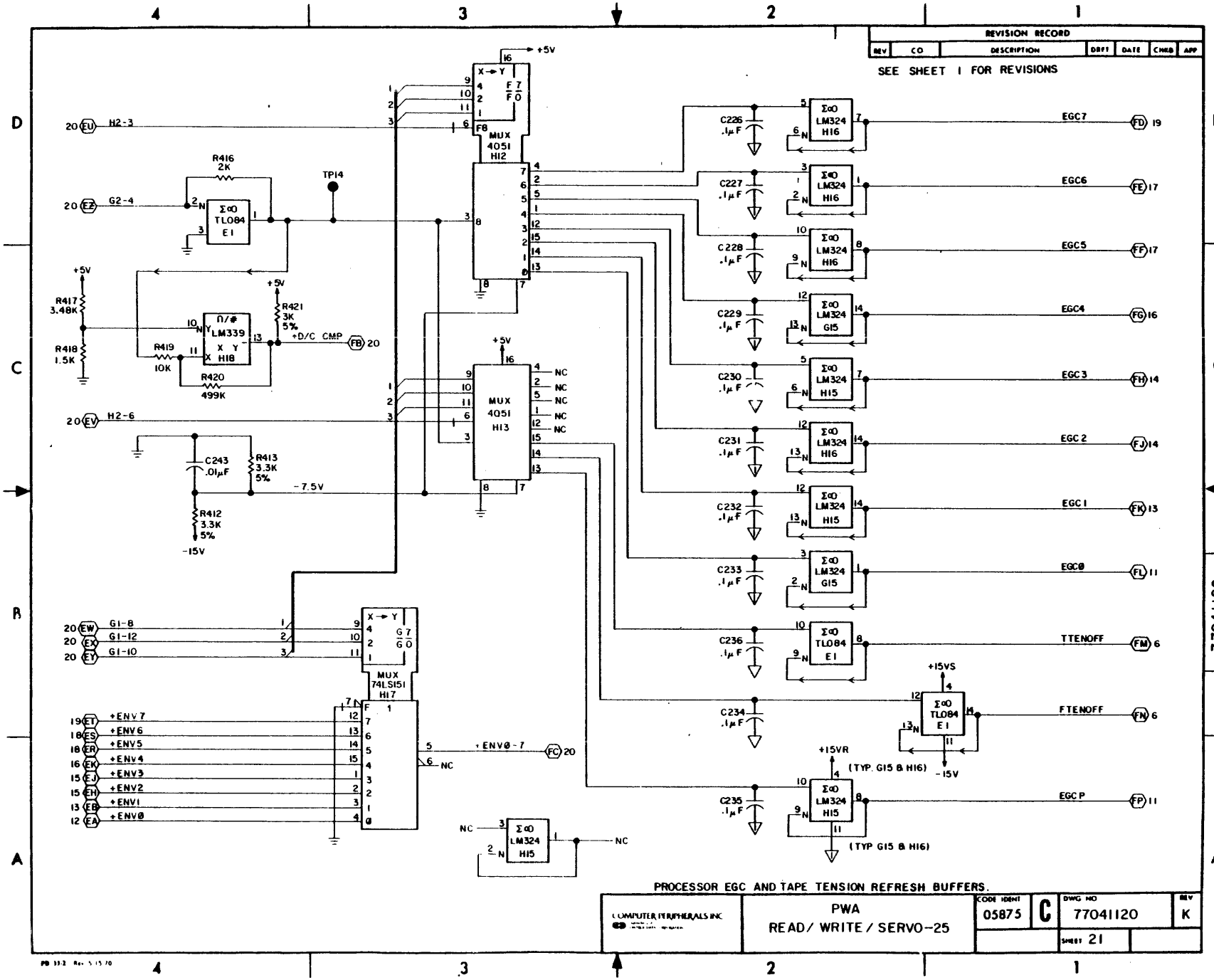
REVISION RECORD
REV | CO | DESCRIPTION | DRFT | DATE | CHKD | APP
SEE SHEET 1 FOR REVISIONS
MUX 4051 H12
MUX 4051 H13
MUX 74LS151 H17
R416 2K
R417 3.48K
R418 1.5K
R419 10K
R420 499K
R421 3K 5%
R412 3.3K 5%
R413 3.3K 5%
C243 .01μF
C226 .1μF
C227 .1μF
C228 .1μF
C229 .1μF
C230 .1μF
C231 .1μF
C232 .1μF
C233 .1μF
C234 .1μF
C235 .1μF
C236 .1μF
TP14
+5V
-7.5V
-15V
+15VS
+15VR
+D/C CMP
+ENV7
+ENV6
+ENV5
+ENV4
+ENV3
+ENV2
+ENV1
+ENV0
+ENV0-7
EGC7
EGC6
EGC5
EGC4
EGC3
EGC2
EGC1
EGC0
EGC P
TTENOFF
FTENOFF
(TYP. G15 & H16)
(TYP G15 & H16)
PROCESSOR EGC AND TAPE TENSION REFRESH BUFFERS.
COMPUTER PERIPHERALS INC
PWA
READ/ WRITE / SERVO-25
CODE IDENT 05875
C
DWG NO 77041120
REV K
SHEET 21

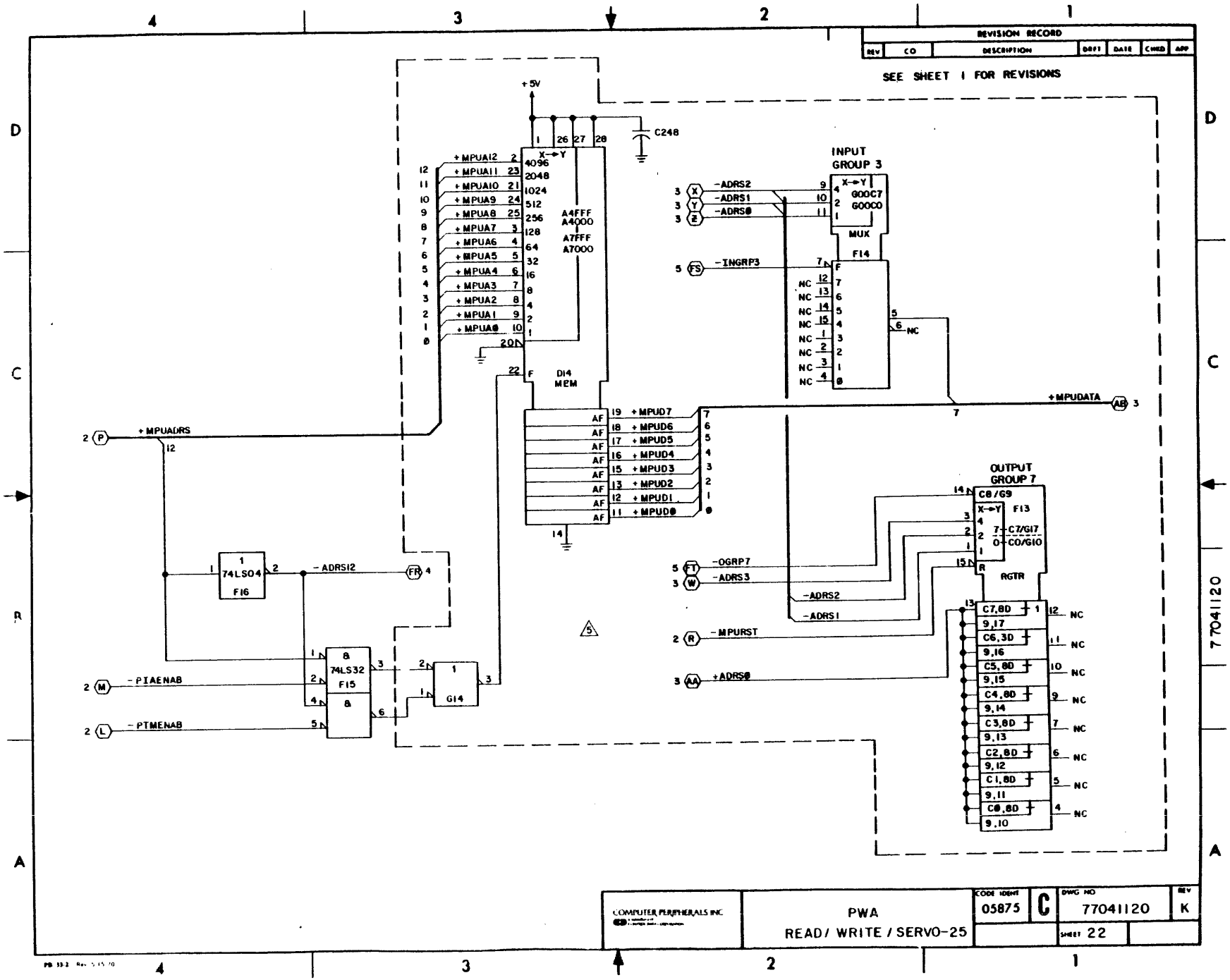
REVISION RECORD
REV CO DESCRIPTION DRFT DATE CHKD APP
SEE SHEET 1 FOR REVISIONS
+5V
C248
+MPUADRS
+MPUA12
+MPUA11
+MPUA10
+MPUA9
+MPUA8
+MPUA7
+MPUA6
+MPUA5
+MPUA4
+MPUA3
+MPUA2
+MPUA1
+MPUA0
4096
2048
1024
512
256
128
64
32
16
8
4
2
1
A4FFF
A4000
A7FFF
A7000
DI4
MEM
+MPUD7
+MPUD6
+MPUD5
+MPUD4
+MPUD3
+MPUD2
+MPUD1
+MPUD0
INPUT
GROUP 3
-ADRS2
-ADRS1
-ADRS0
-INGRP3
MUX
FI4
NC
+MPUDATA
OUTPUT
GROUP 7
C8/G9
FI3
C7/GI7
C0/GI0
RGTR
-OGRP7
-ADRS3
-ADRS2
-ADRS1
-MPURST
+ADRS0
C7,8D
9,17
C6,3D
9,16
C5,8D
9,15
C4,8D
9,14
C3,8D
9,13
C2,8D
9,12
C1,8D
9,11
C0,8D
9,10
74LS04
FI6
-ADRSI2
74LS32
FI5
GI4
-PIAENAB
-PTMENAB
COMPUTER PERIPHERALS INC.
PWA
READ/ WRITE / SERVO-25
CODE IDENT 05875
C
DWG NO 77041120
REV K
SHEET 22

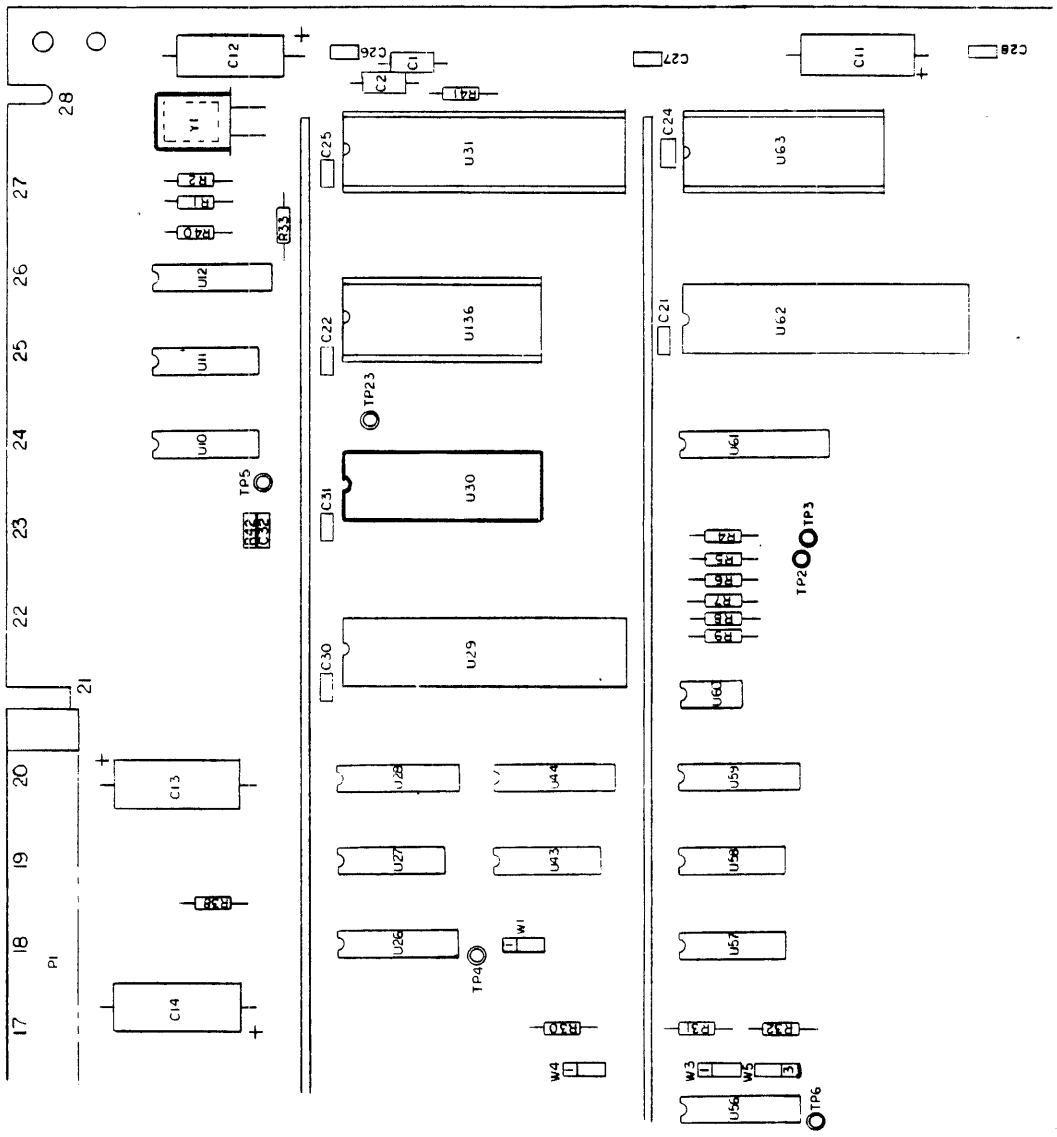

FORMATTER-CONTROL PWA LAYOUT (SHEET 1A)

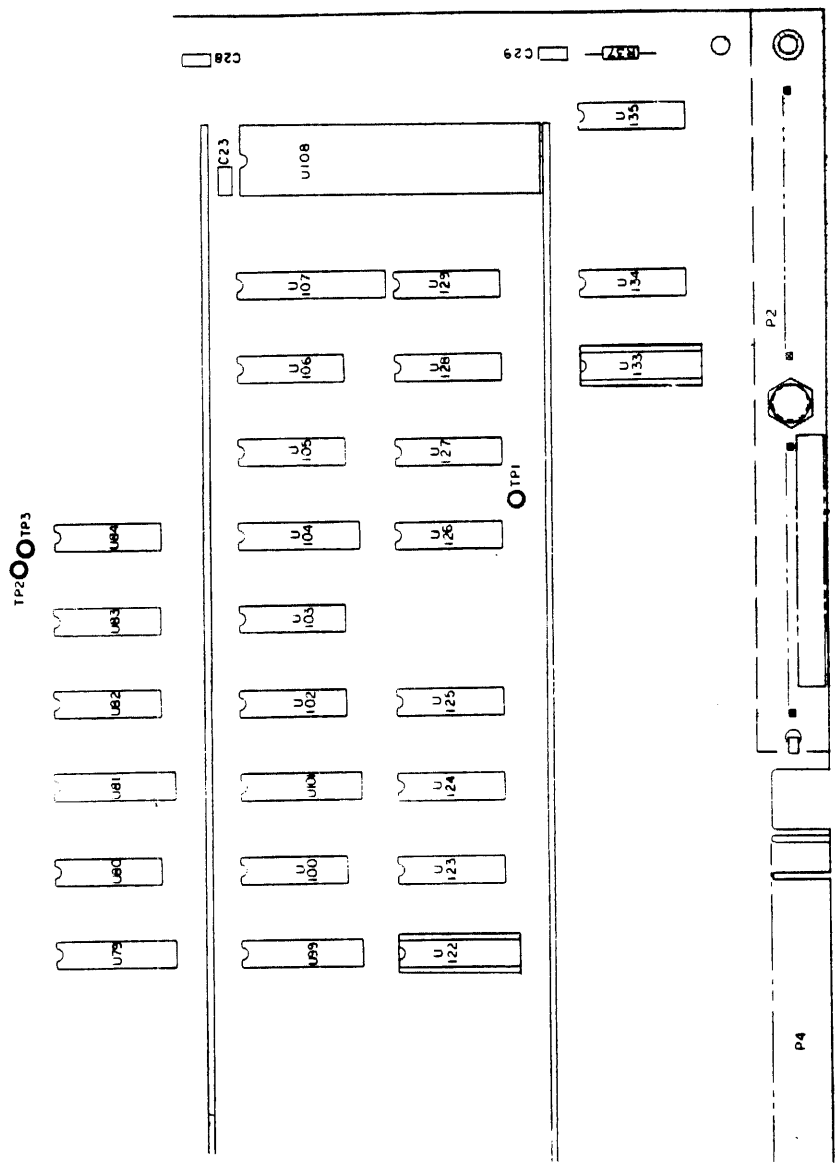

FORMATTER-CONTROL PWA LAYOUT (SHEET 1B)

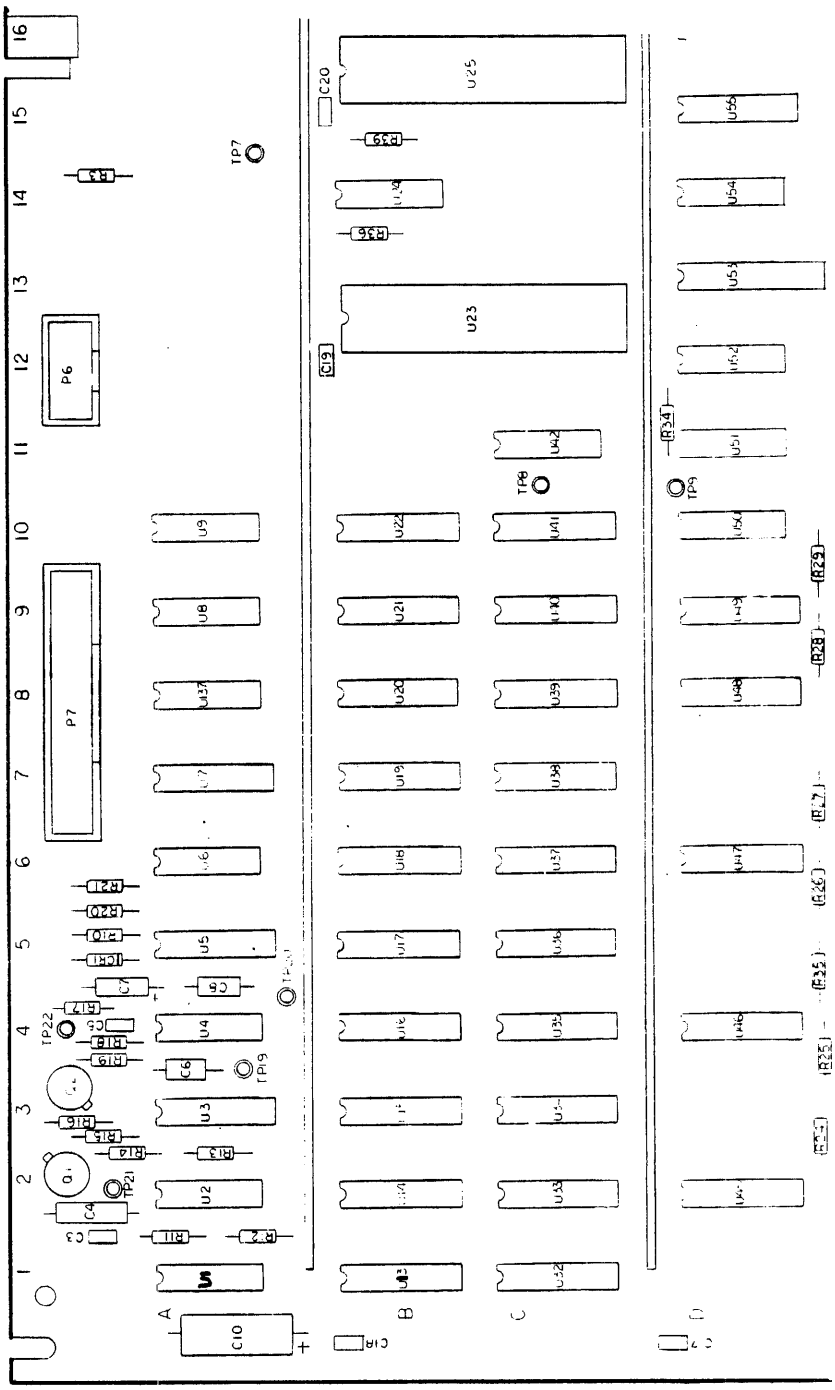

FORMATTER-CONTROL PWA LAYOUT (SHEET 1C)

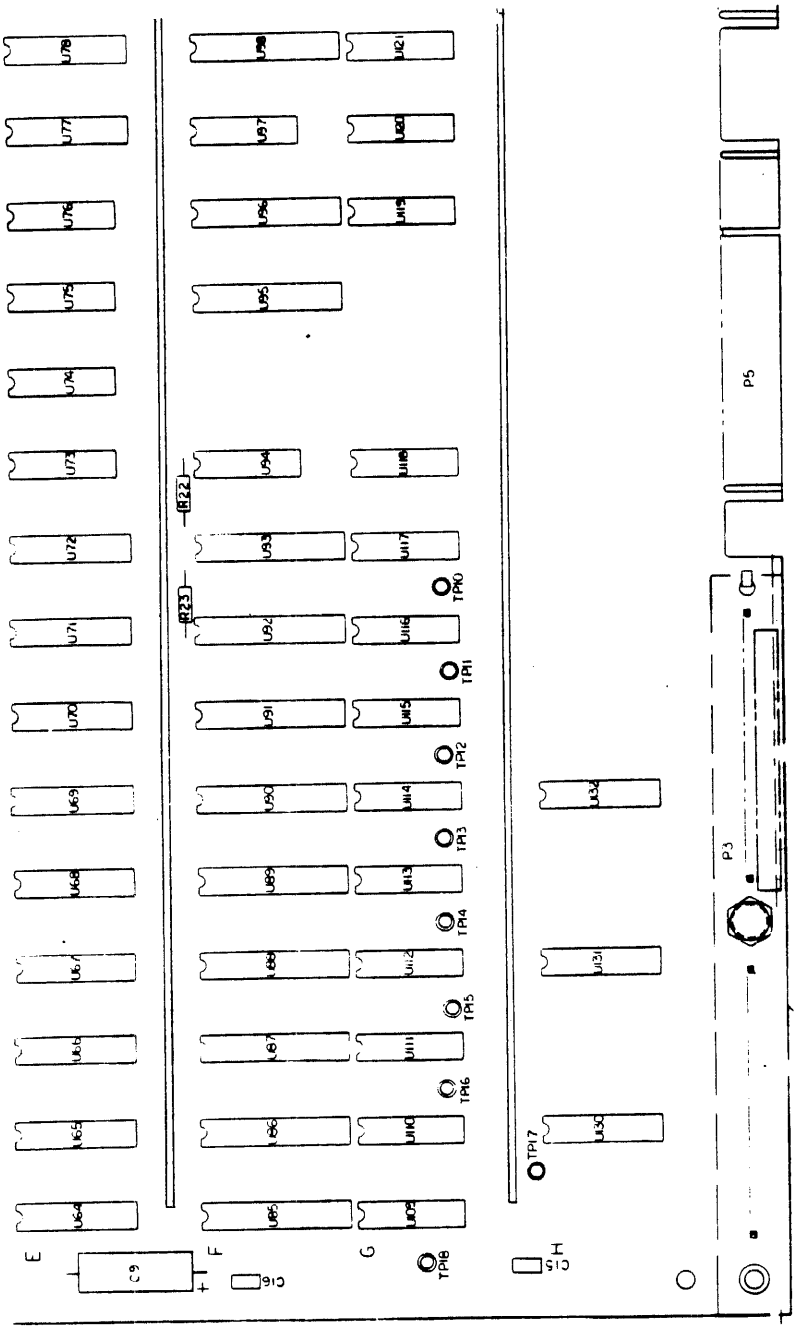

FORMATTER-CONTROL PWA LAYOUT (SHEET 1D)

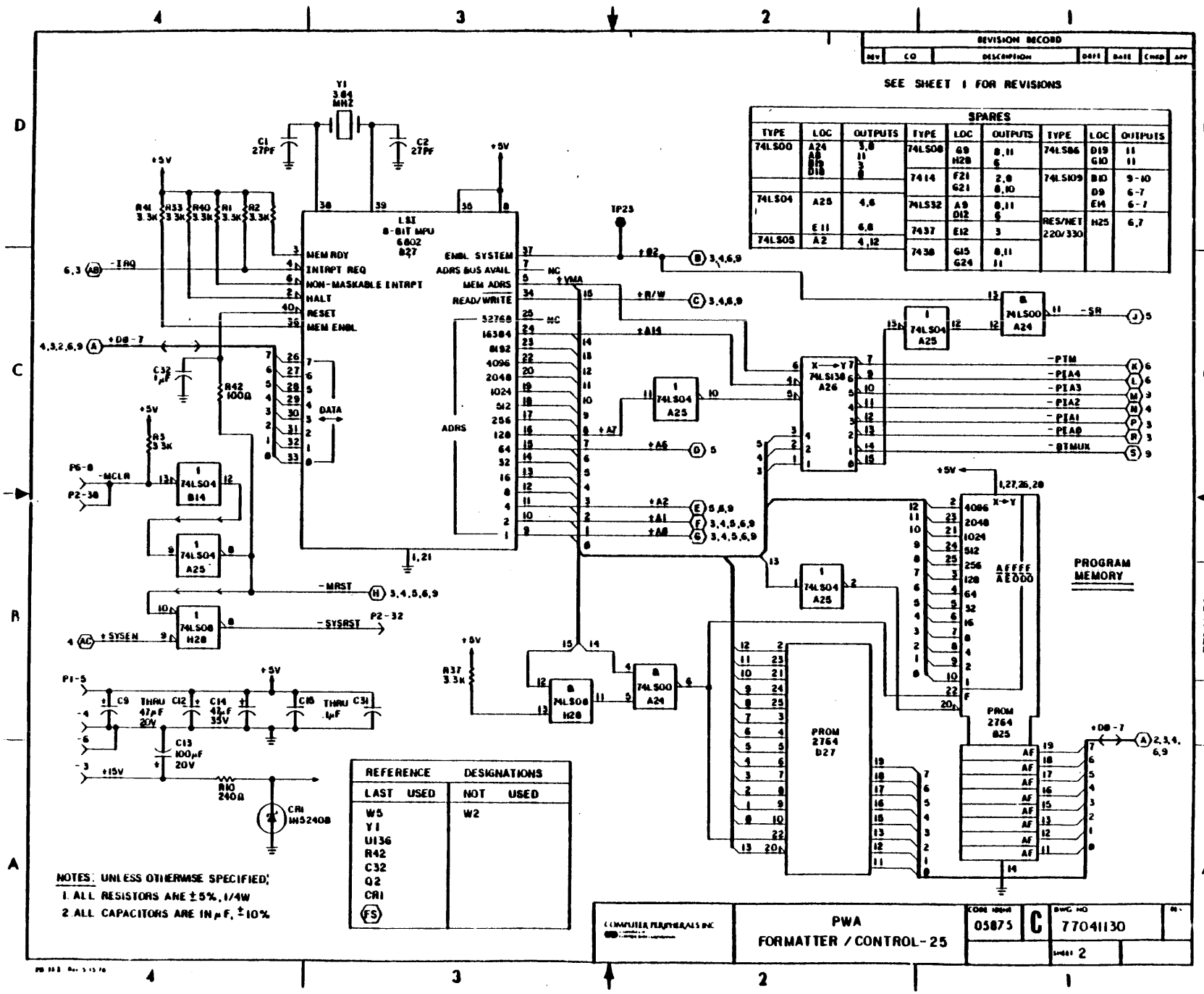

SPARES								
TYPE	LOC	OUTPUTS	TYPE	LOC	OUTPUTS	TYPE	LOC	OUTPUTS
74LS00	A24 A8 B19 D18	3,8 11 3 8	74LS08	G9 H28	8,11 6	74LS86	D19 G10	11 11
			7414	F21 G21	2,8 8,10	74LS109	B10 D9 E14	9-10 6-7 6-7
74LS04	A25 E11	4,6 6,8	74LS32	A9 D12	8,11 6	RES/NET 220/330	H25	6,7
74LS05	A2	4,12	7437	E12	3			
			7438	G15 G24	8,11 11			

REFERENCE DESIGNATIONS	
LAST USED	NOT USED
W5	W2
Y1	
U136	
R42	
C32	
Q2	
CR1	
FS	

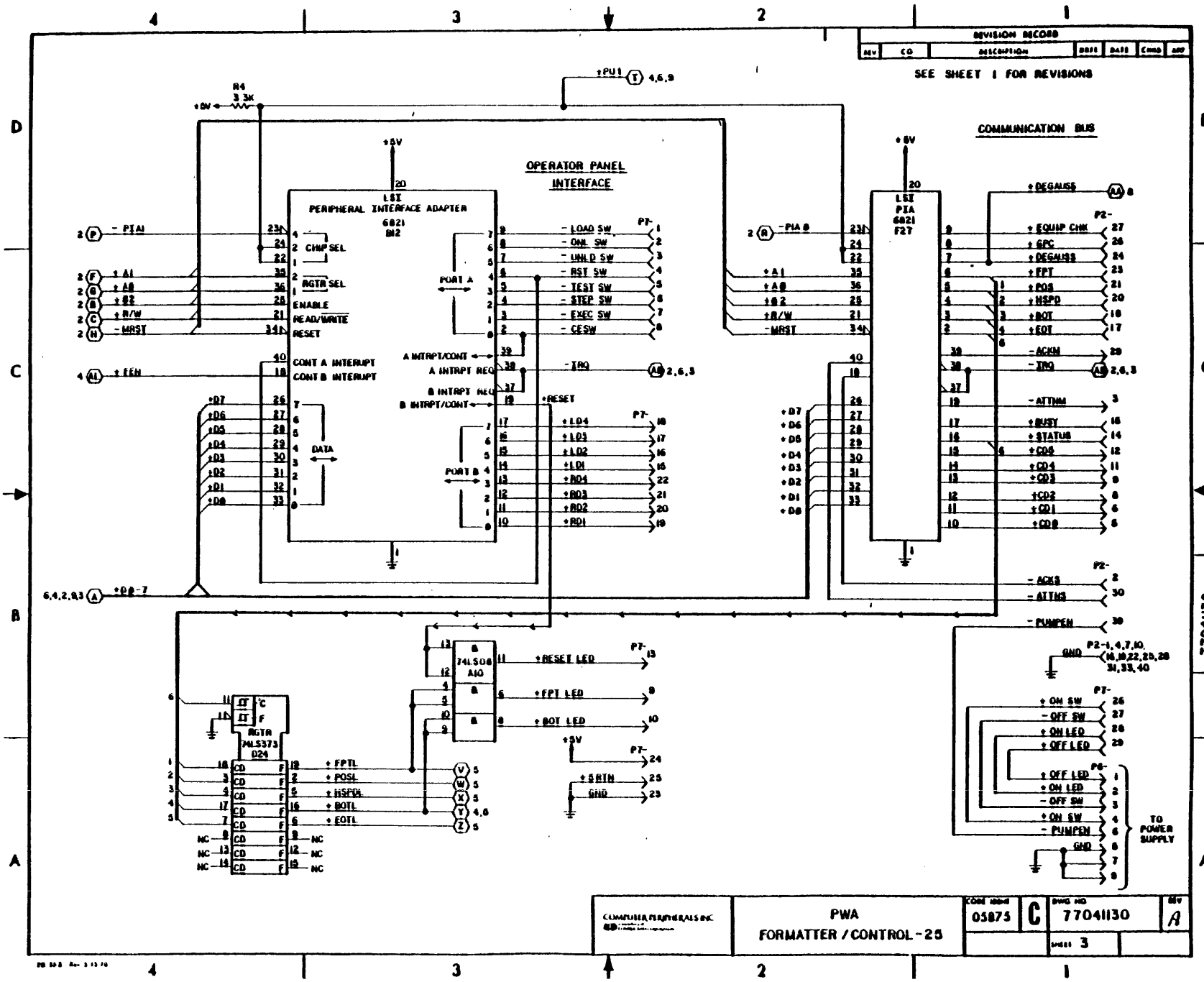
REVISION RECORD
SEE SHEET 1 FOR REVISIONS
COMMUNICATION BUS
OPERATOR PANEL INTERFACE
PERIPHERAL INTERFACE ADAPTER
6821
M2
LSI
PIA
6821
F27
+5V
+PU1
R4
3.3K
CHIP SEL
REGTR SEL
ENABLE
READ/WRITE
RESET
CONT A INTERUPT
CONT B INTERUPT
DATA
PORT A
PORT B
A INTRPT/CONT
A INTRPT REQ
B INTRPT REQ
B INTRPT/CONT
- LOAD SW
- ONL SW
- UNLD SW
- RST SW
- TEST SW
- STEP SW
- EXEC SW
- CESW
- IRQ
+RESET
+LD4
+LD3
+LD2
+LD1
+RD4
+RD3
+RD2
+RD1
+DEGAUSS
+EQUIP CHK
+GPC
+DEGAUSS
+FPT
+POS
+HSPD
+BOT
+EOT
- ACKN
- IRQ
- ATTN
+BUSY
+STATUS
+CD4
+CD3
+CD2
+CD1
+CD0
- ACKS
- ATTNS
- PUMPEN
GND
+ON SW
- OFF SW
+ON LED
+OFF LED
- OFF LED
+ON LED
- OFF SW
+ON SW
- PUMPEN
GND
TO POWER SUPPLY
74LS08 A10
RESET LED
FPT LED
BOT LED
+5V
+SHTH
GND
REGTR 74LS373 D24
+FPTL
+POSL
+HSPDL
+BOTL
+EOTL
NC
PWA
FORMATTER / CONTROL - 25
05875
C
77041130
A
SHEET 3
77041130

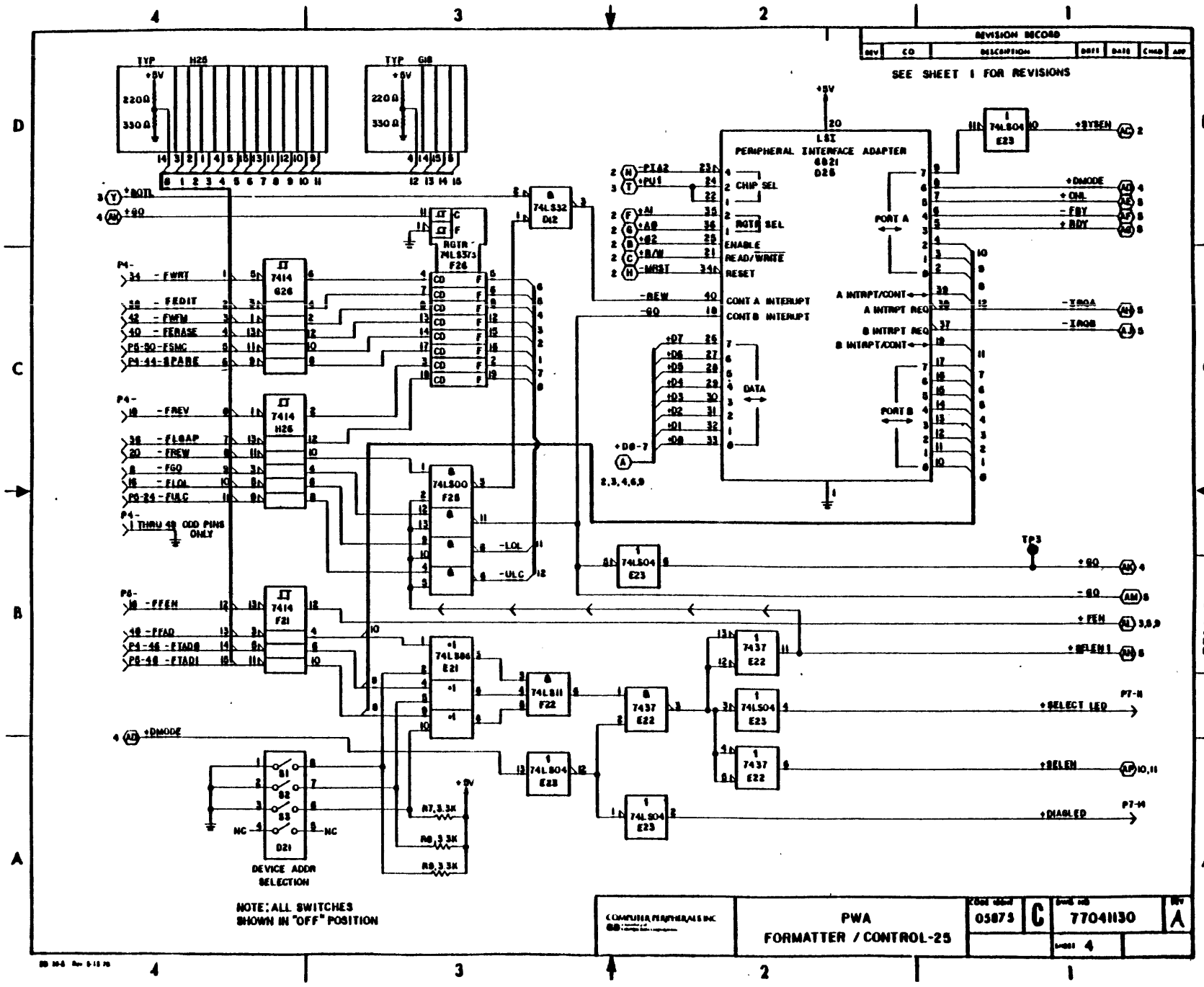
REVISION RECORD
SEE SHEET 1 FOR REVISIONS
LSI
PERIPHERAL INTERFACE ADAPTER
6821
D25
CHIP SEL
RGTR SEL
ENABLE
READ/WRITE
RESET
CONT A INTERUPT
CONT B INTERUPT
DATA
PORT A
PORT B
A INTRPT/CONT
A INTRPT REQ
B INTRPT REQ
B INTRPT/CONT
74LS32
D12
RGTR
74LS373
F26
7414
G26
7414
H26
74LS00
F25
7414
F21
74LS86
E21
74LS11
F22
74LS04
E23
7437
E22
DEVICE ADDR
SELECTION
NOTE: ALL SWITCHES
SHOWN IN "OFF" POSITION
COMPUTER PERIPHERALS INC
PWA
FORMATTER / CONTROL-25
05875
C
77041130
A
SHEET 4

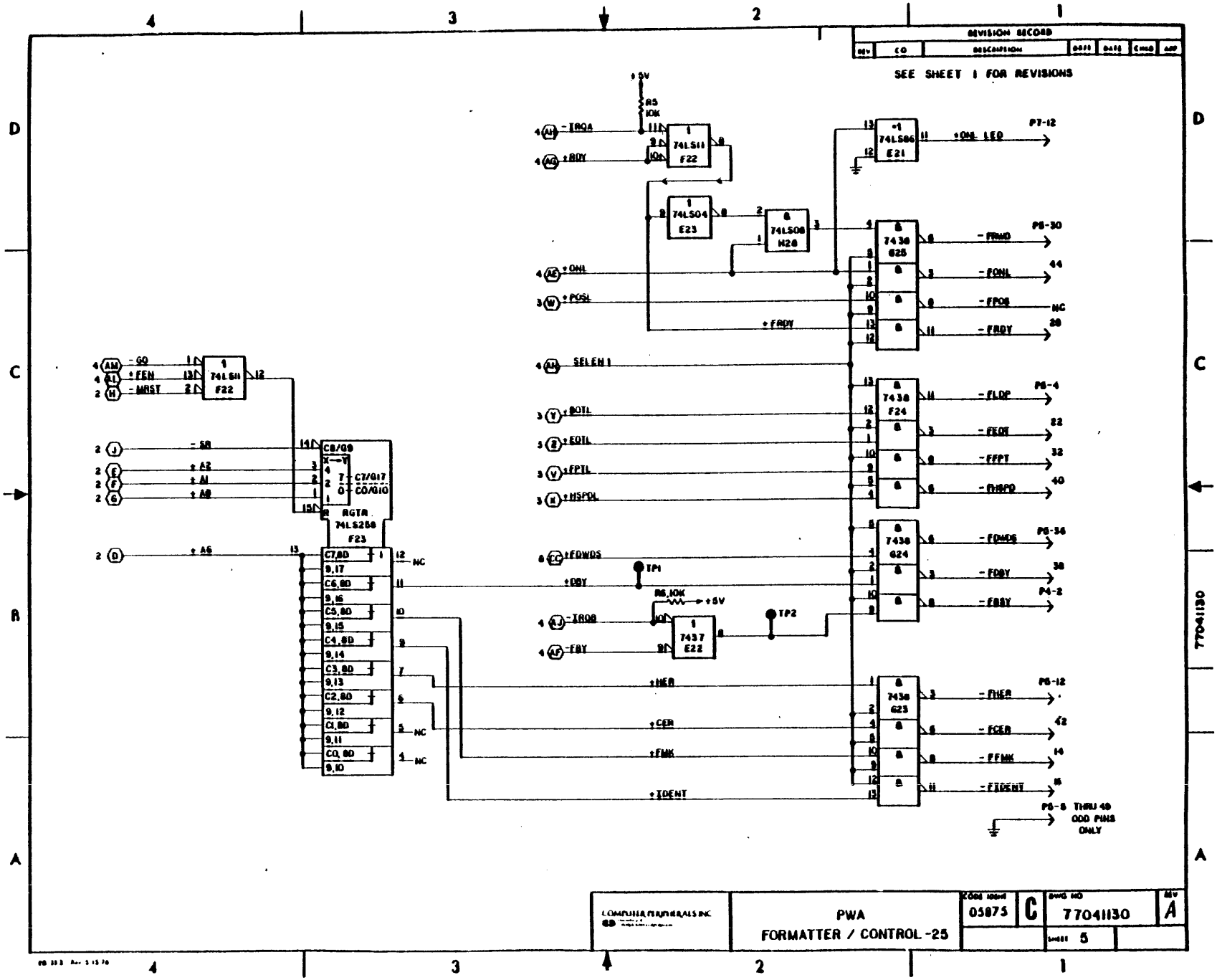
REVISION RECORD
SEE SHEET 1 FOR REVISIONS
+5V
R5 10K
74LS11 F22
74LS04 E23
74LS08 H26
74LS86 E21
7438 B25
7438 F24
7438 G24
7438 G23
7437 E22
74LS11 F22
74LS258 F23
- IRQ4
+ RDY
+ ONL
+ POSL
+ FRDY
SELEN 1
+ BOTL
+ EOTL
+ FPTL
+ HSPOL
+ FDWDS
+ FDBY
- IRQB
- FBY
TP1
TP2
R6 10K
- GO
+ FEN
- MRST
- SB
+ A2
+ A1
+ A0
+ A6
C8/G9
C7/G17
C0/G10
RGTR
C7,8D
9,17
C6,8D
9,16
C5,8D
9,15
C4,8D
9,14
C3,8D
9,13
C2,8D
9,12
C1,8D
9,11
C0,8D
9,10
NC
+ HER
+ CER
+ FMK
+ IDENT
+ ONL LED
- FRWD
- FONL
- FPOS
- FRDY
- FLOP
- FEOT
- FFPT
- FHPO
- FDWDS
- FDBY
- FBBY
- FHER
- FCER
- FFMK
- FIDENT
P7-12
P8-30
44
NC
28
P8-4
22
32
40
P8-34
38
P4-2
P8-12
42
14
16
P8-8 THRU 40 ODD PINS ONLY
COMPUTER PERIPHERALS INC
PWA
FORMATTER / CONTROL -25
05875
C
77041130
A
SHEET 5
77041130

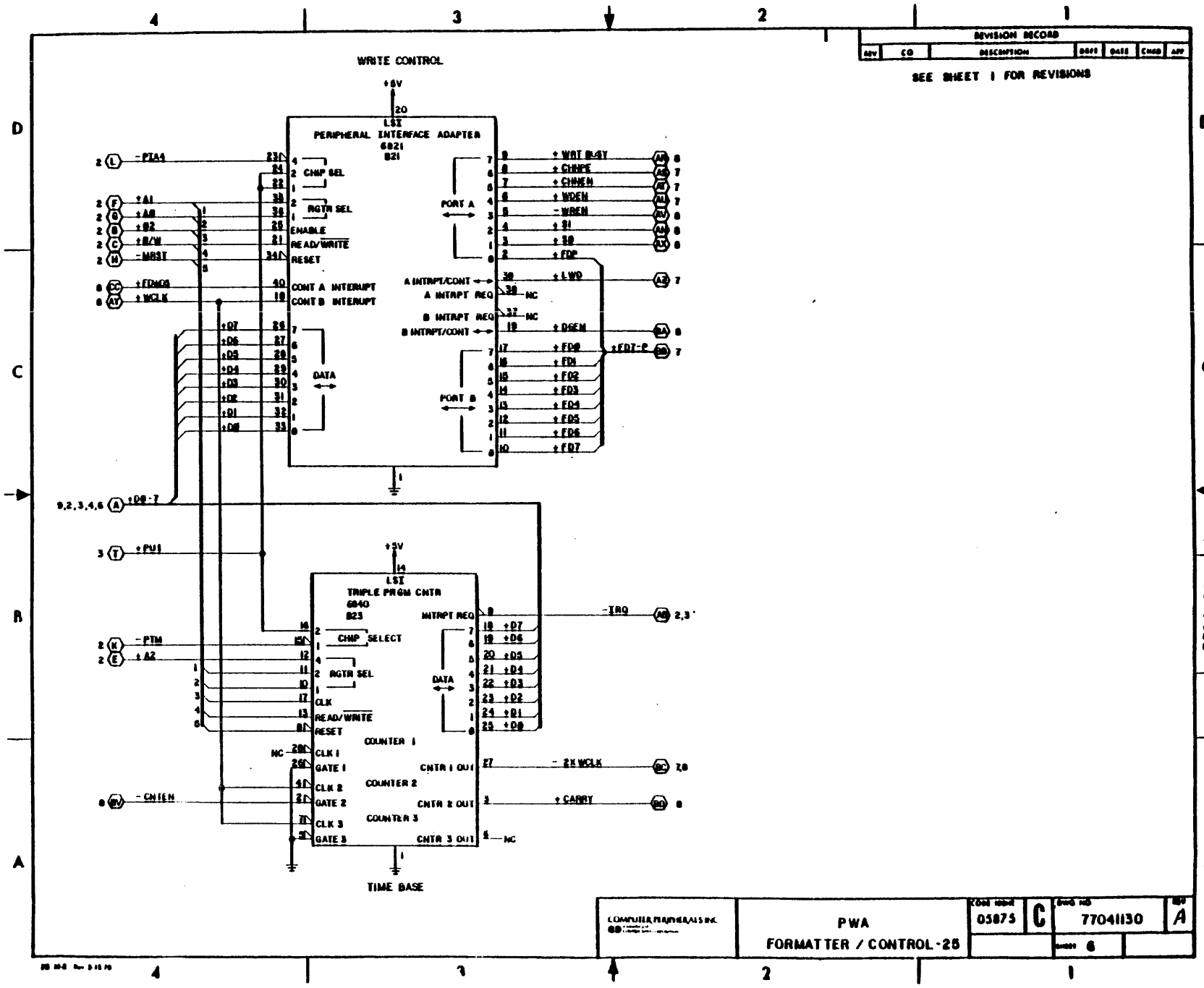
WRITE CONTROL
REVISION RECORD
SEE SHEET 1 FOR REVISIONS
+5V
LSI
PERIPHERAL INTERFACE ADAPTER
6821
821
CHIP SEL
RGTR SEL
ENABLE
READ/WRITE
RESET
CONT A INTERRUPT
CONT B INTERRUPT
DATA
PORT A
PORT B
A INTRPT/CONT
A INTRPT REQ
B INTRPT REQ
B INTRPT/CONT
-PIA4
+A1
+A0
+B2
+R/W
-MRST
+FDMOS
+WCLK
+D7
+D6
+D5
+D4
+D3
+D2
+D1
+D0
+D0-7
+WRT BABY
+CHNPE
+CHNEN
+WDEN
-WREN
+SI
+SO
+FDP
+LWD
+DSEN
+FD0
+FD1
+FD2
+FD3
+FD4
+FD5
+FD6
+FD7
+FDI-P
+PU1
LSI
TRIPLE PRGM CNTR
6840
823
INTRPT REQ
CHIP SELECT
RGTR SEL
CLK
READ/WRITE
RESET
COUNTER 1
CLK 1
GATE 1
CNTR 1 OUT
COUNTER 2
CLK 2
GATE 2
CNTR 2 OUT
COUNTER 3
CLK 3
GATE 3
CNTR 3 OUT
-PTM
+A2
-CNTEN
-IRQ
-2X WCLK
+CARRY
TIME BASE
PWA
FORMATTER / CONTROL-28
05875
C
77041130
A
6

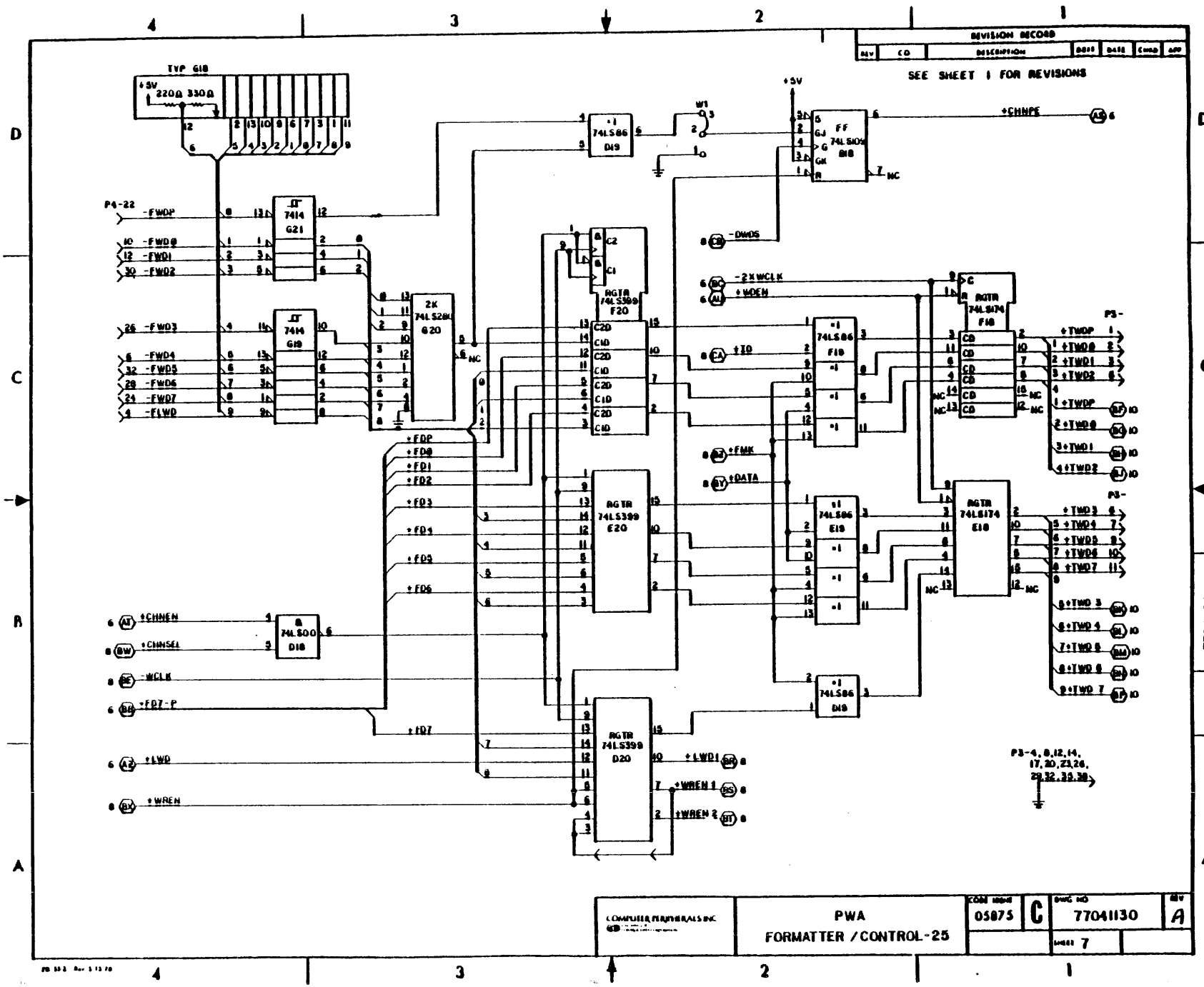
REVISION RECORD
SEE SHEET 1 FOR REVISIONS
PWA
FORMATTER /CONTROL-25
05875
C
77041130
A
SHEET 7
COMPUTER PERIPHERALS INC.

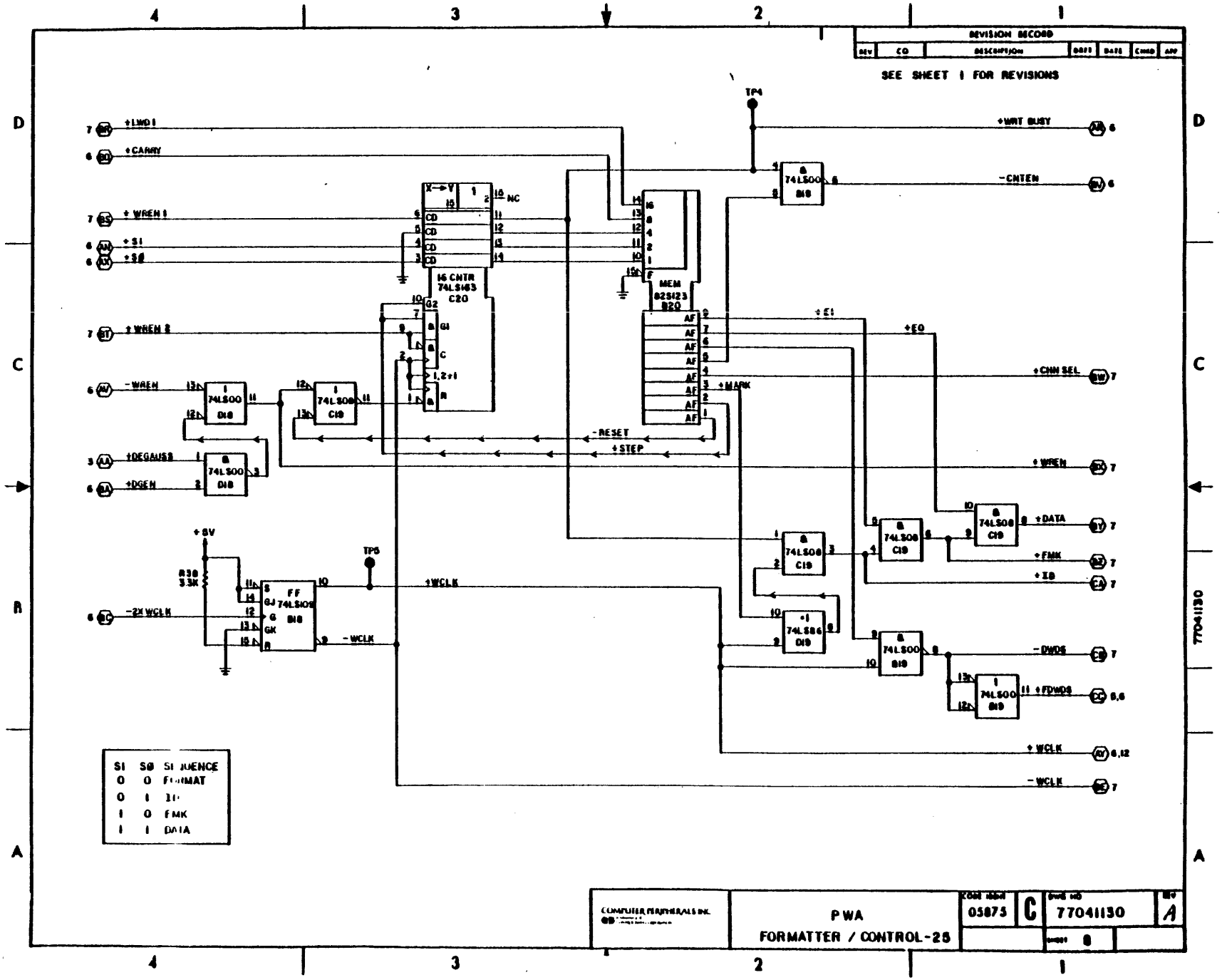
REVISION RECORD
SEE SHEET 1 FOR REVISIONS
+LWD I
+CARRY
+WREN I
+SI
+SØ
+WREN Ø
-WAEN
+DEGAUSS
+DGEN
+5V
-2X WCLK
TP4
TP5
16 CNTR 74LS163 C20
MEM 82S123 B20
+WRT BUSY
-CNTEN
+CHN SEL
+WREN
+DATA
+FMK
+IB
-DWDS
+FDWDS
+WCLK
-WCLK
-RESET
+STEP
+MARK
+EI
+EO
SI SØ SEQUENCE
0 0 FORMAT
0 1 IB
1 0 FMK
1 1 DATA
PWA
FORMATTER / CONTROL-25
05875
C
77041130
A

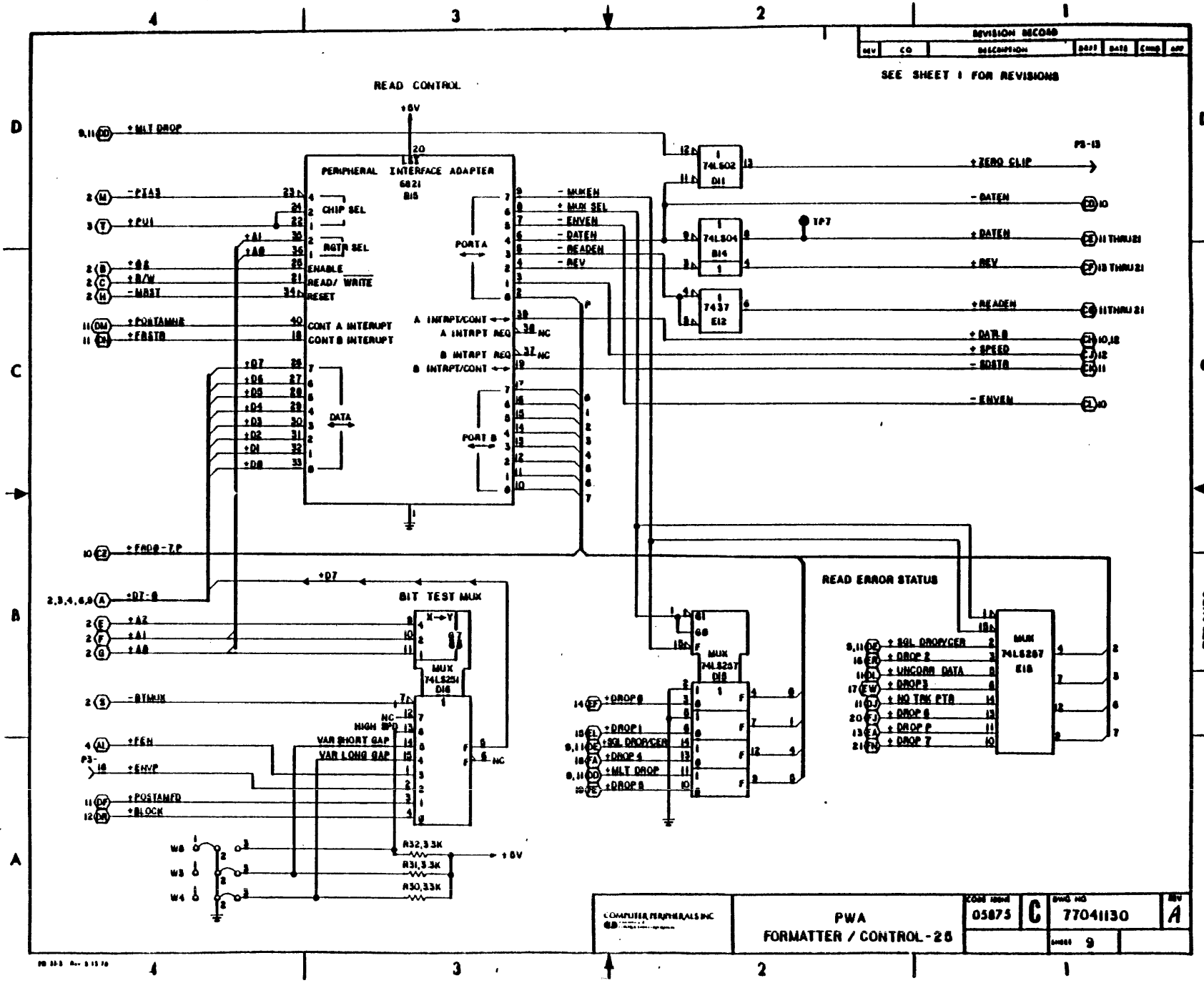
REVISION RECORD
SEE SHEET 1 FOR REVISIONS
READ CONTROL
+5V
PERIPHERAL INTERFACE ADAPTER
6821
E15
CHIP SEL
RGTR SEL
ENABLE
READ/ WRITE
RESET
CONT A INTERUPT
CONT B INTERUPT
DATA
PORT A
PORT B
A INTRPT/CONT
A INTRPT REQ
B INTRPT REQ
B INTRPT/CONT
+MLT DROP
-PIAS
+PUI
+A1
+A0
+E
+R/W
-MRST
+POSTAMP
+FRSTB
+D7
+D6
+D5
+D4
+D3
+D2
+D1
+D0
-MUXEN
+MUX SEL
-ENVEN
-DATEN
-READEN
-REV
+FADD-7P
+D7-0
BIT TEST MUX
+A2
+A1
+A0
-BTMUX
+FEN
+ENVP
+POSTAMED
+BLOCK
MUX
74LS254
D16
HIGH SPD
VAR SHORT GAP
VAR LONG GAP
R32,3.3K
R31,3.3K
R30,33K
+5V
74LS02
D11
74LS04
B14
7437
E12
TP7
P3-13
+ZERO CLIP
-DATEN
+DATEN
+REV
+READEN
+DATA
+SPEED
-RDSTB
-ENVEN
READ ERROR STATUS
MUX
74LS257
D18
+DROP 0
+DROP 1
+SDL DROPCER
+DROP 4
+MLT DROP
+DROP 6
MUX
74LS257
E18
+SDL DROPCER
+DROP 2
+UNCORR DATA
+DROP 3
+NO TRK PTR
+DROP 6
+DROP P
+DROP 7
COMPUTER PERIPHERALS INC
PWA
FORMATTER / CONTROL-28
05875
C
77041130
A
SHEET 9

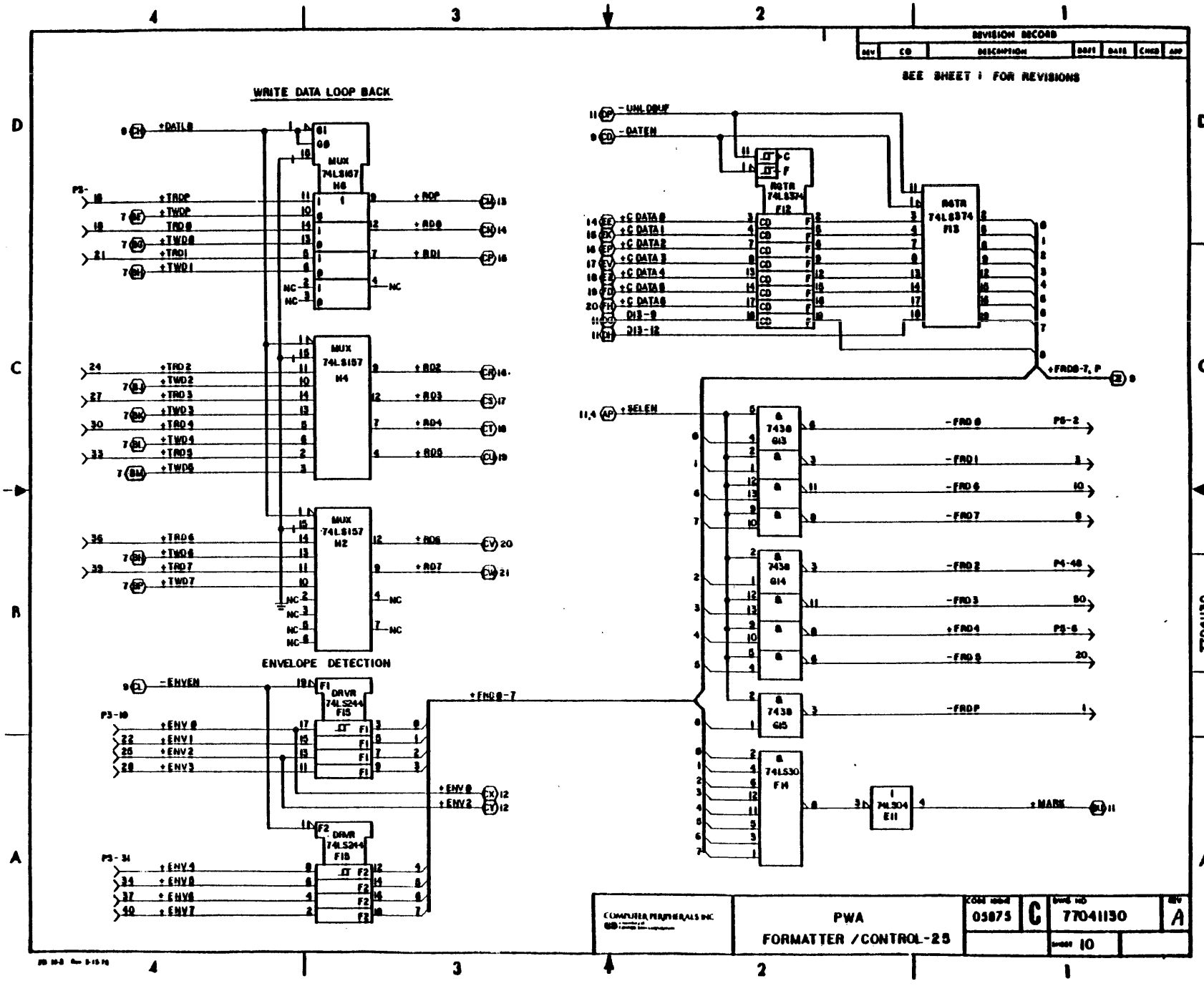
WRITE DATA LOOP BACK
ENVELOPE DETECTION
SEE SHEET 1 FOR REVISIONS
REVISION RECORD
PWA
FORMATTER /CONTROL-25
05875
C
77041130
A
10

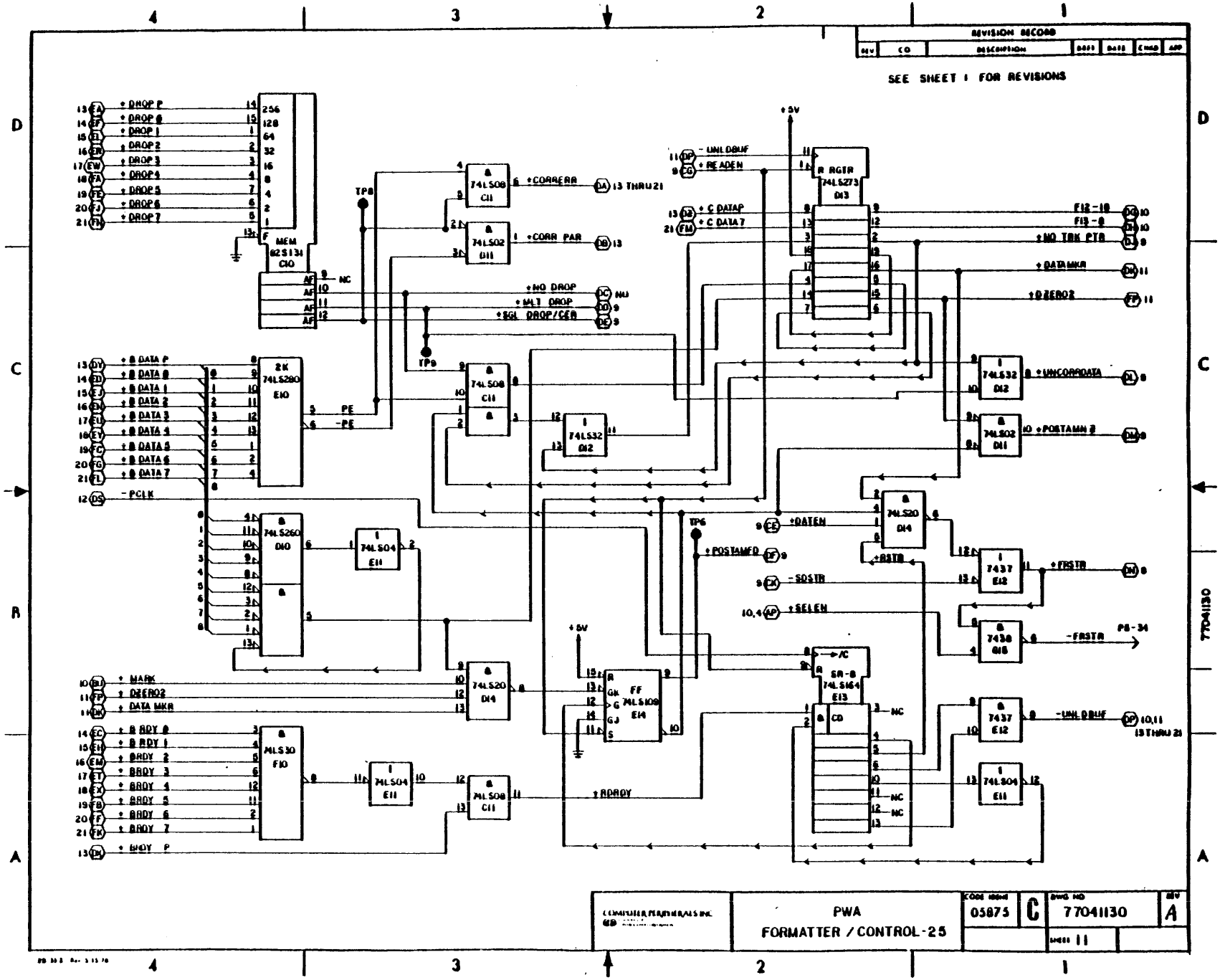
REVISION RECORD
SEE SHEET 1 FOR REVISIONS
MEM 82S131 C10
74LS08 C11
74LS02 D11
74LS32 D12
74LS280 E10
74LS260 D10
74LS04 E11
74LS20 D14
74LS30 F10
74LS109 E14
74LS273 D13
74LS164 E13
7437 E12
7438 G15
+DROP P
+DROP 0
+DROP 1
+DROP 2
+DROP 3
+DROP 4
+DROP 5
+DROP 6
+DROP 7
+B DATA P
+B DATA 0
+B DATA 1
+B DATA 2
+B DATA 3
+B DATA 4
+B DATA 5
+B DATA 6
+B DATA 7
-PCLK
+MARK
+DZERO2
+DATA MKR
+B RDY 0
+B RDY 1
+BRDY 2
+BRDY 3
+BRDY 4
+BRDY 5
+BRDY 6
+BRDY 7
+BRDY P
+CORRERR
+CORR PAR
+NO DROP
+MLT DROP
+SGL DROP/CER
+RDRDY
-UNLDBUF
+READEN
+C DATAP
+C DATA7
+DATEN
+POSTAMFD
-SDSTR
+SELEN
+RSTR
+FRSTR
-FRSTR
+UNCORRDATA
+POSTAMN 2
+NO TRK PTR
+DATAMKR
+DZERO2
F12-18
F13-8
PE
-PE
+5V
TP8
TP9
TP6
PS-34
13 THRU 21
PWA
FORMATTER / CONTROL-25
05875
C
77041130
A
SHEET 11

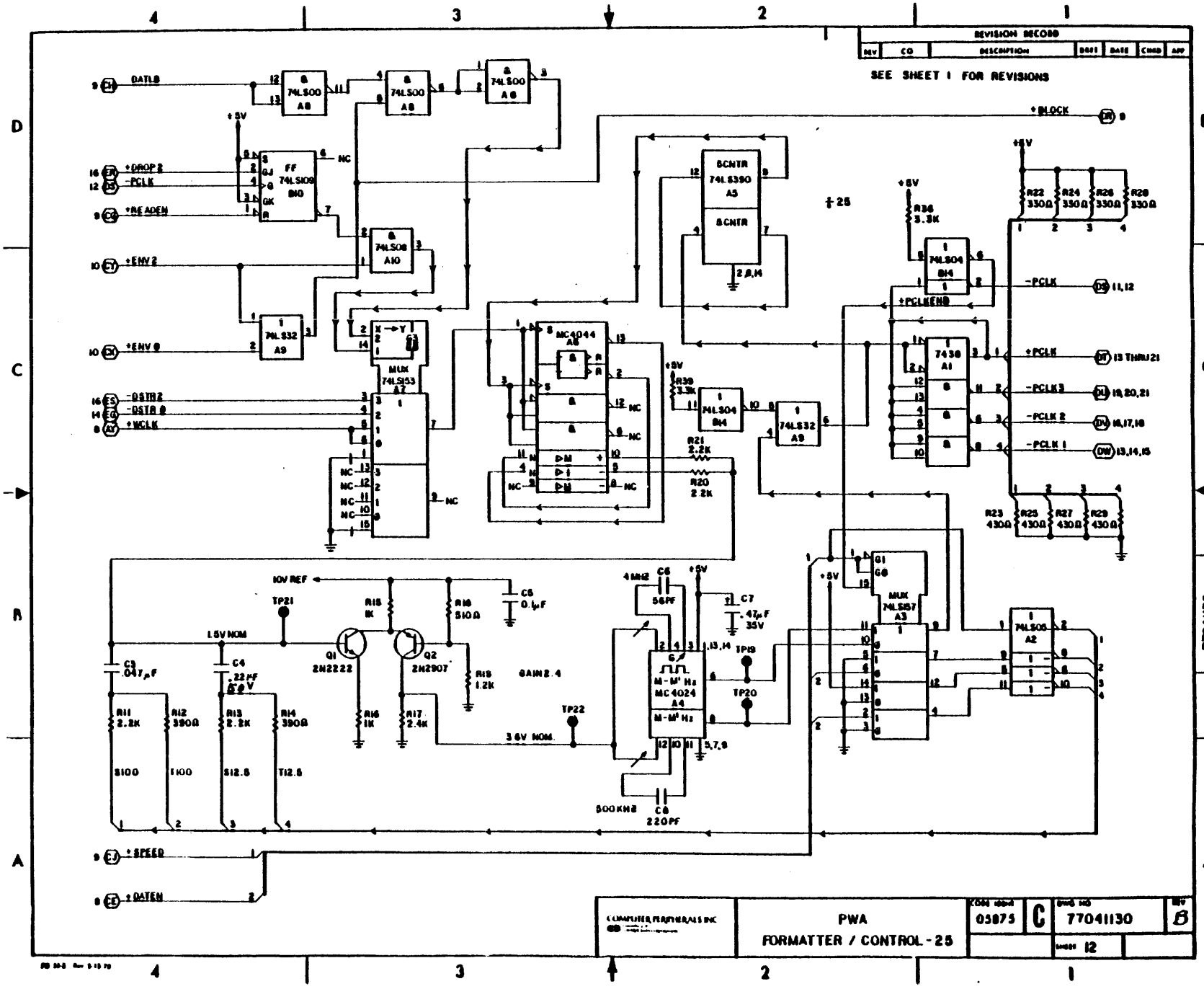
REVISION RECORD
SEE SHEET 1 FOR REVISIONS
PWA
FORMATTER / CONTROL - 25
77041130
B
C
05875
SHEET 12
74LS00 A8
74LS08 A10
74LS74 FF B10
74LS32 A9
74LS153 MUX A7
MC4044 A6
8CNTR 74LS390 A5
74LS04 B4
7430 A1
74LS157 MUX A3
74LS06 A2
MC4024 A4
Q1 2N2222
Q2 2N2907
+5V
+10V REF
+15V NOM
-15V NOM
+BLOCK
-PCLK
+PCLKEND
+SPEED
+DATEN
+DROP 2
+READEN
+ENV 2
+ENV 0
-OSTR2
-OSTR 0
+WCLK
4MHz
500KHz
GAIN 2.4

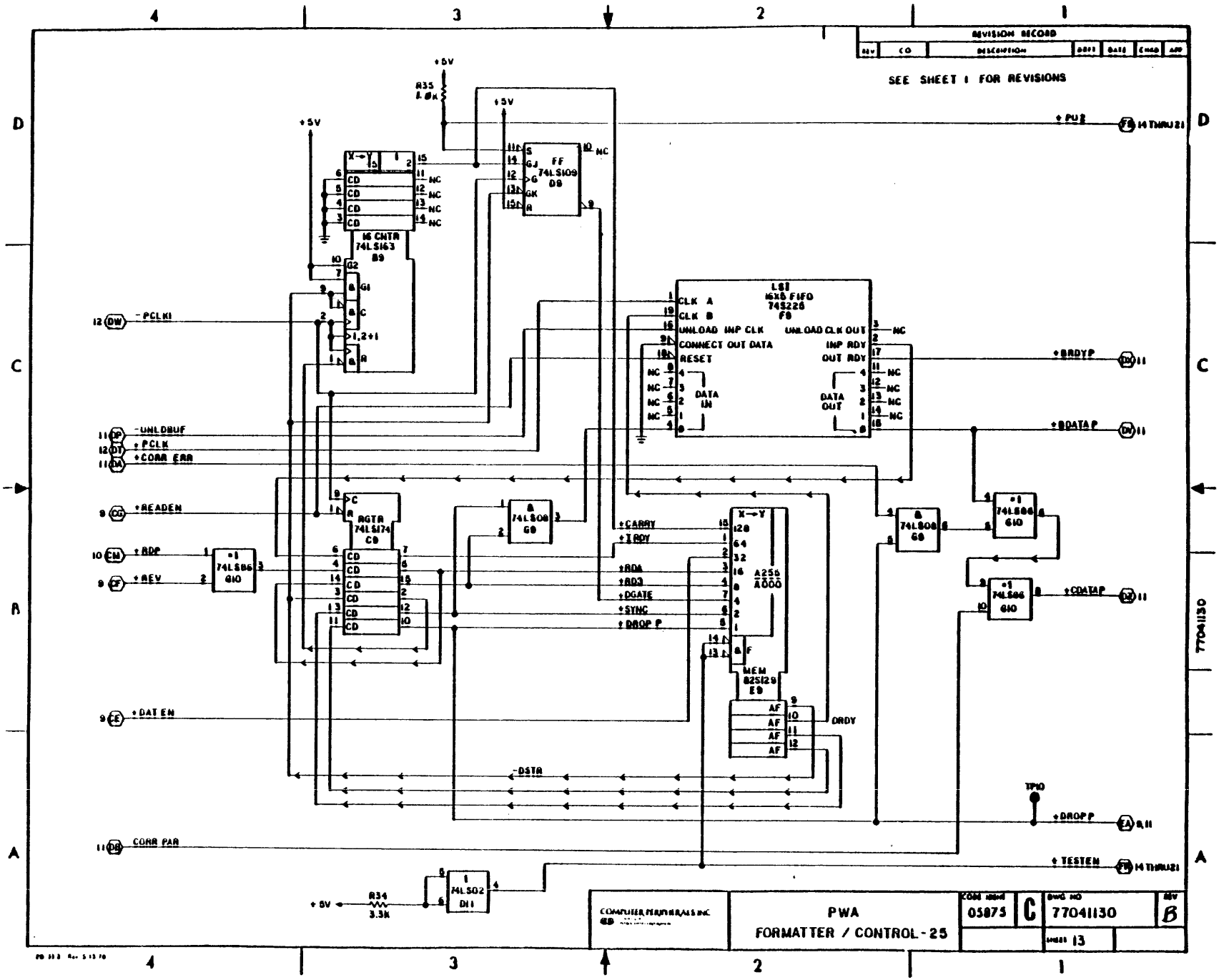
REVISION RECORD
SEE SHEET 1 FOR REVISIONS
+5V
R35 1.0K
FF 74LS109 D9
16 CNTR 74LS163 B9
LSI 16X5 FIFO 74S225 F9
CLK A
CLK B
UNLOAD INP CLK
CONNECT OUT DATA
RESET
UNLOAD CLK OUT
INP RDY
OUT RDY
DATA IN
DATA OUT
RGTR 74LS174 C9
74LS08 G9
74LS86 G10
A256 A000
MEM 82S129 E9
DRDY
-DSTR
-PCLKI
-UNLDBUF
+PCLK
+CORR ERR
+READEN
+RDP
+REV
+DAT EN
CORR PAR
+CARRY
+IRDY
+RDA
+RD3
+DGATE
+SYNC
+DROP P
+PU2
+BRDYP
+BDATAP
+CDATAP
+DROPP
+TESTEN
TP10
R34 3.3K
74LS02 D11
COMPUTER PERIPHERALS INC
PWA
FORMATTER / CONTROL-25
05875
C
77041130
B
SHEET 13
77041130

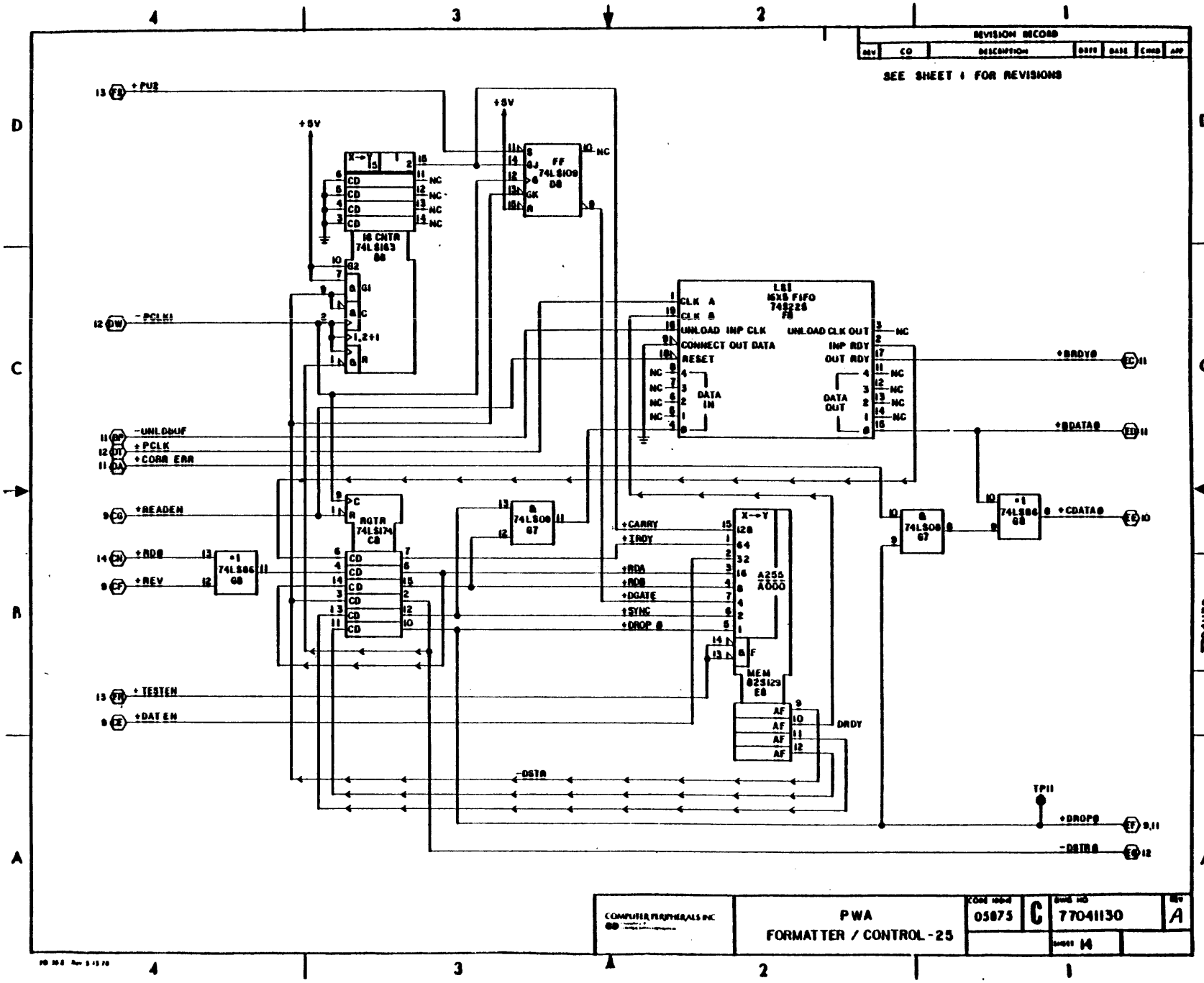
REVISION RECORD
SEE SHEET 1 FOR REVISIONS
+PU2
+5V
-PCLK1
-UNLDBUF
+PCLK
+CORR ERR
+READEN
+RDB
+REV
+TESTEN
+DATEN
16 CNTR 74LS163 B8
RQTR 74LS174 C8
LSI 16X5 FIFO 748226 F8
A255 A000
MEM 823129 E8
+CARRY
+TRDY
+RDA
+RDB
+DGATE
+SYNC
+DROP 0
DRDY
-DSTB
+BRDY0
+BDATA0
+CDATA0
TP11
+DROP0
-DSTB0
COMPUTER PERIPHERALS INC
PWA
FORMATTER / CONTROL-25
05875
C
77041130
A
SHEET 14

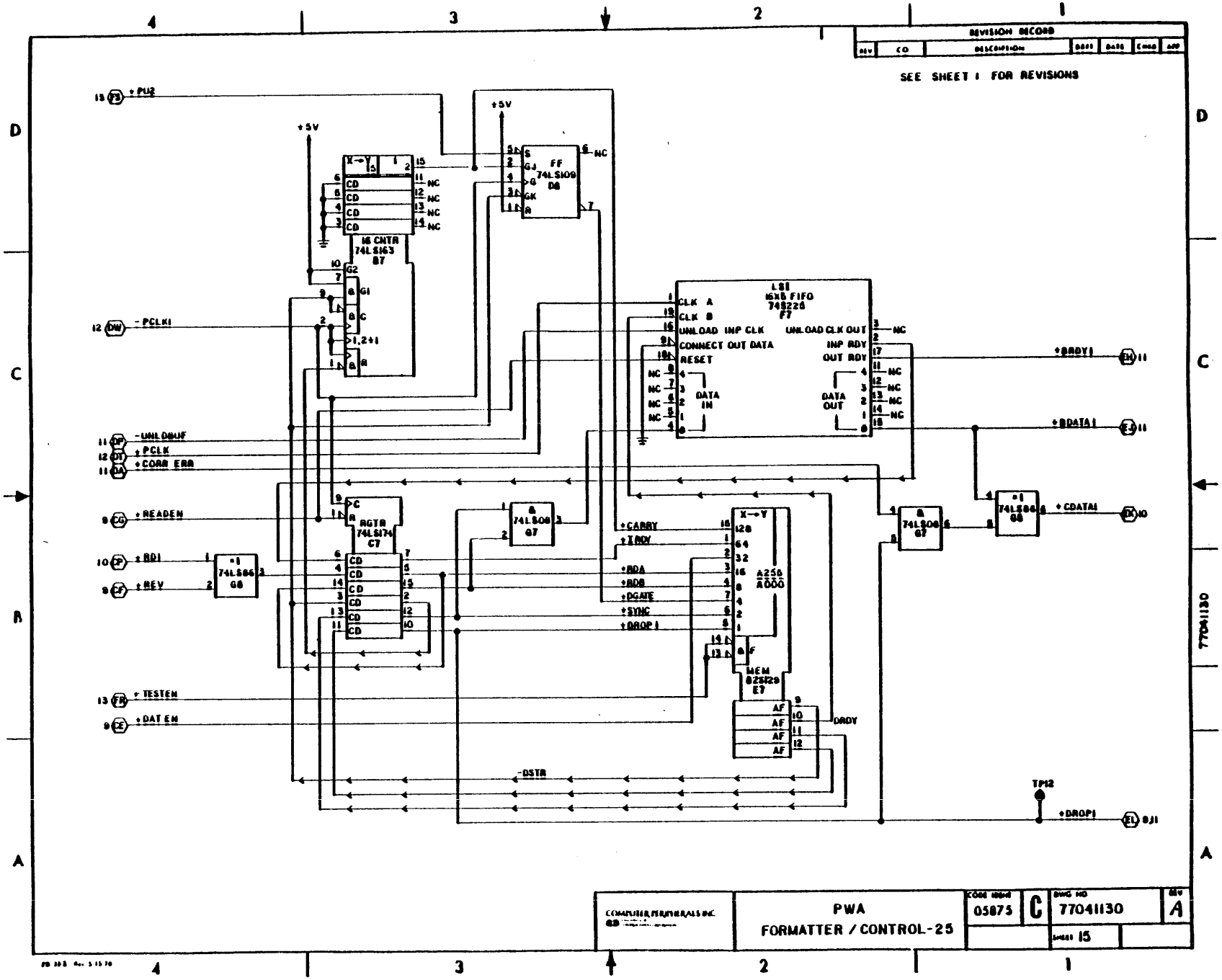
REVISION RECORD
SEE SHEET 1 FOR REVISIONS
+PU2
+5V
16 CNTR 74LS163 B7
FF 74LS109 D8
-PCLK1
LSI 16X8 FIFO 745228 F7
CLK A
CLK B
UNLOAD INP CLK
CONNECT OUT DATA
RESET
UNLOAD CLK OUT
INP RDY
OUT RDY
DATA IN
DATA OUT
+RDY1
+RDATA1
-UNLDBUF
+PCLK
+CORR ERR
+READEN
RGTR 74LS174 C7
+RDI
+REV
+CARRY
+IRDY
+RDA
+RDB
+DGATE
+SYNC
+DROP1
X→Y A256 A000
MEM 82S129 E7
AF
DRDY
+TESTEN
+DATEN
-DSTR
TP12
+CDATA1
+DROP1
COMPUTER PERIPHERALS INC
PWA
FORMATTER / CONTROL-25
CODE IDENT 05875
SIZE C
DWG NO 77041130
REV A
SHEET 15

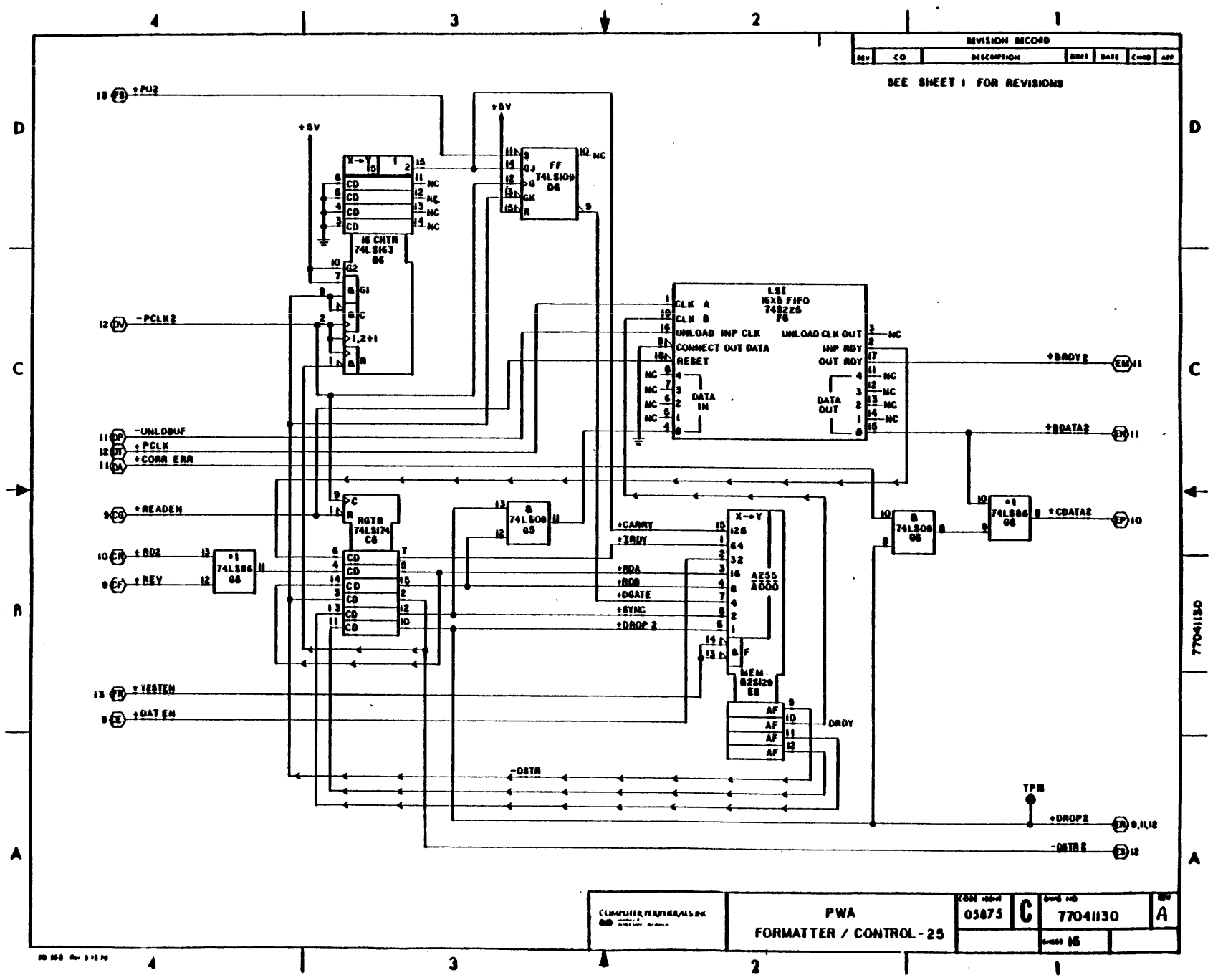
REVISION RECORD
SEE SHEET 1 FOR REVISIONS
+PU2
+5V
-PCLK2
-UNLDBUF
+PCLK
+CORR ERR
+READEN
+RD2
+REV
+TESTEN
+DAT EN
16 CNTR 74LS163 B6
RQTR 74LS174 C6
FF 74LS109 D6
LSI 16X8 FIFO 745225 F6
A255 A000
MEM 82S129 E6
+CARRY
+XRDY
+RDA
+RDB
+DGATE
+SYNC
+DROP 2
DRDY
-DSTR
+BRDY2
+BDATA2
+CDATA2
TP18
+DROP2
-DSTR2
COMPUTER PERIPHERALS INC
PWA
FORMATTER / CONTROL-25
03875
C
77041130
A
SHEET 16

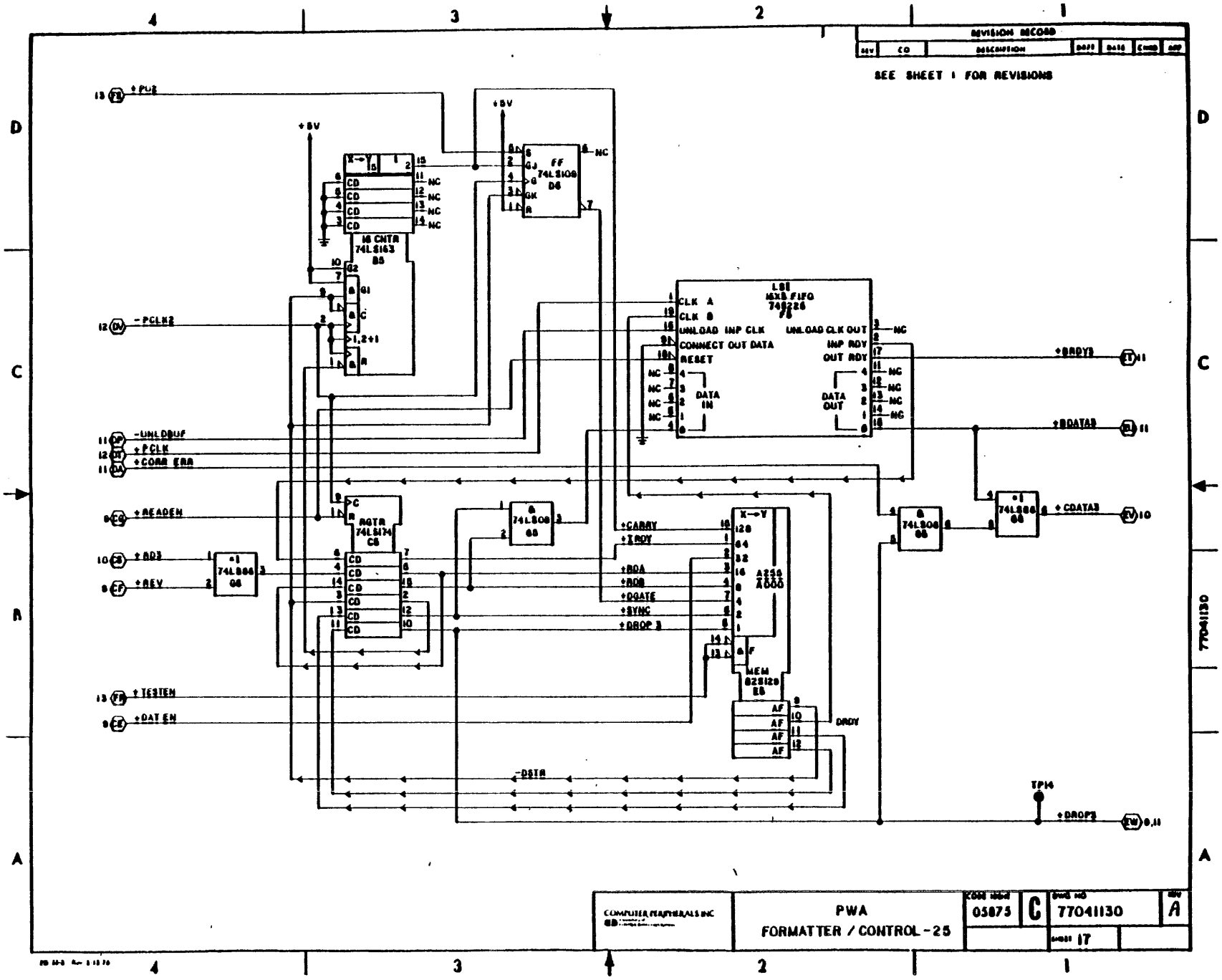
REVISION RECORD
SEE SHEET 1 FOR REVISIONS
+PU2
-PCLK2
-UNLDBUF
+PCLK
+CORR ERR
+READEN
+RD3
+REV
+TESTEN
+DAT EN
+5V
16 CNTR
74LS163
B5
FF
74LS109
D6
LSI
16X8 FIFO
74S226
F5
CLK A
CLK B
UNLOAD INP CLK
CONNECT OUT DATA
RESET
UNLOAD CLK OUT
INP RDY
OUT RDY
DATA IN
DATA OUT
RGTR
74LS174
C5
74LS08
G5
74LS86
G6
+CARRY
+IRDY
+RDA
+RDB
+DGATE
+SYNC
+DROP 3
A255
A000
MEM
82S129
E5
DRDY
-DSTR
+BRDY3
+BDATA3
+CDATA3
+DROP3
TP14
77041130
COMPUTER PERIPHERALS INC
PWA
FORMATTER / CONTROL-25
05875
C
77041130
A
17

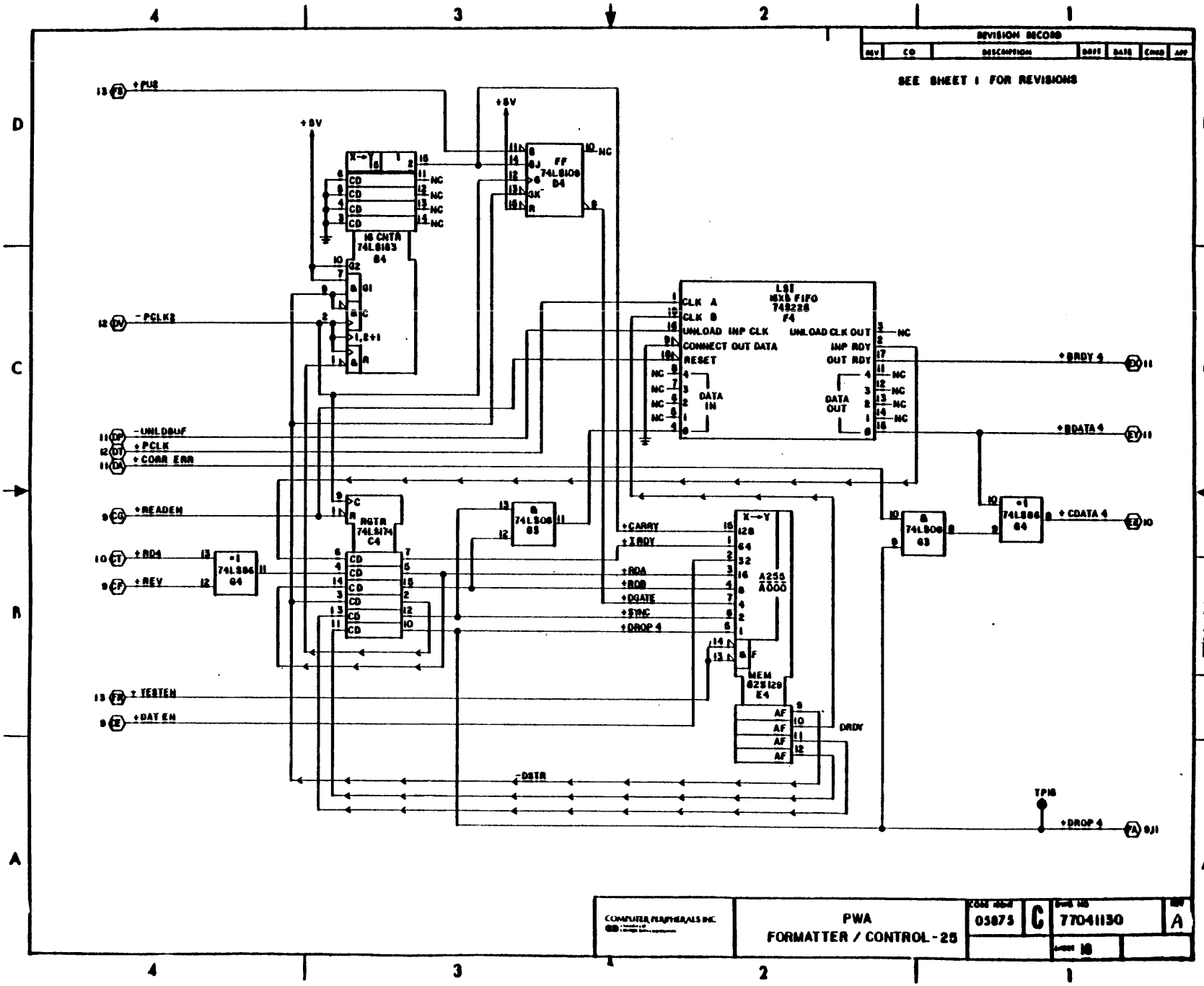
REVISION RECORD
SEE SHEET 1 FOR REVISIONS
+PUE
+5V
-PCLK2
-UNLDBUF
+PCLK
+CORR ERR
+READEN
+RD4
+REV
+TESTEN
+DAT EN
16 CNTR 74LS163 B4
RGTR 74LS174 C4
FF 74LS109 B4
LSI 16X5 FIFO 74S226 F4
CLK A
CLK B
UNLOAD IMP CLK
CONNECT OUT DATA
RESET
UNLOAD CLK OUT
IMP RDY
OUT RDY
DATA IN
DATA OUT
X→Y 128 64 32 16 8 4 2 1
A255 A000
MEM 625129 E4
+CARRY
+IRDY
+RDA
+RDB
+DGATE
+SYNC
+DROP 4
DRDY
-DSTR
+RDRDY 4
+RDATA 4
+CDATA 4
TP18
+DROP 4
74LS86 B4
74LS08 B3
74LS08 B3
74LS86 B4
COMPUTER PERIPHERALS INC.
PWA
FORMATTER / CONTROL-25
CAGE CODE 03875
SIZE C
DWG NO 77041130
REV A
SHEET 10

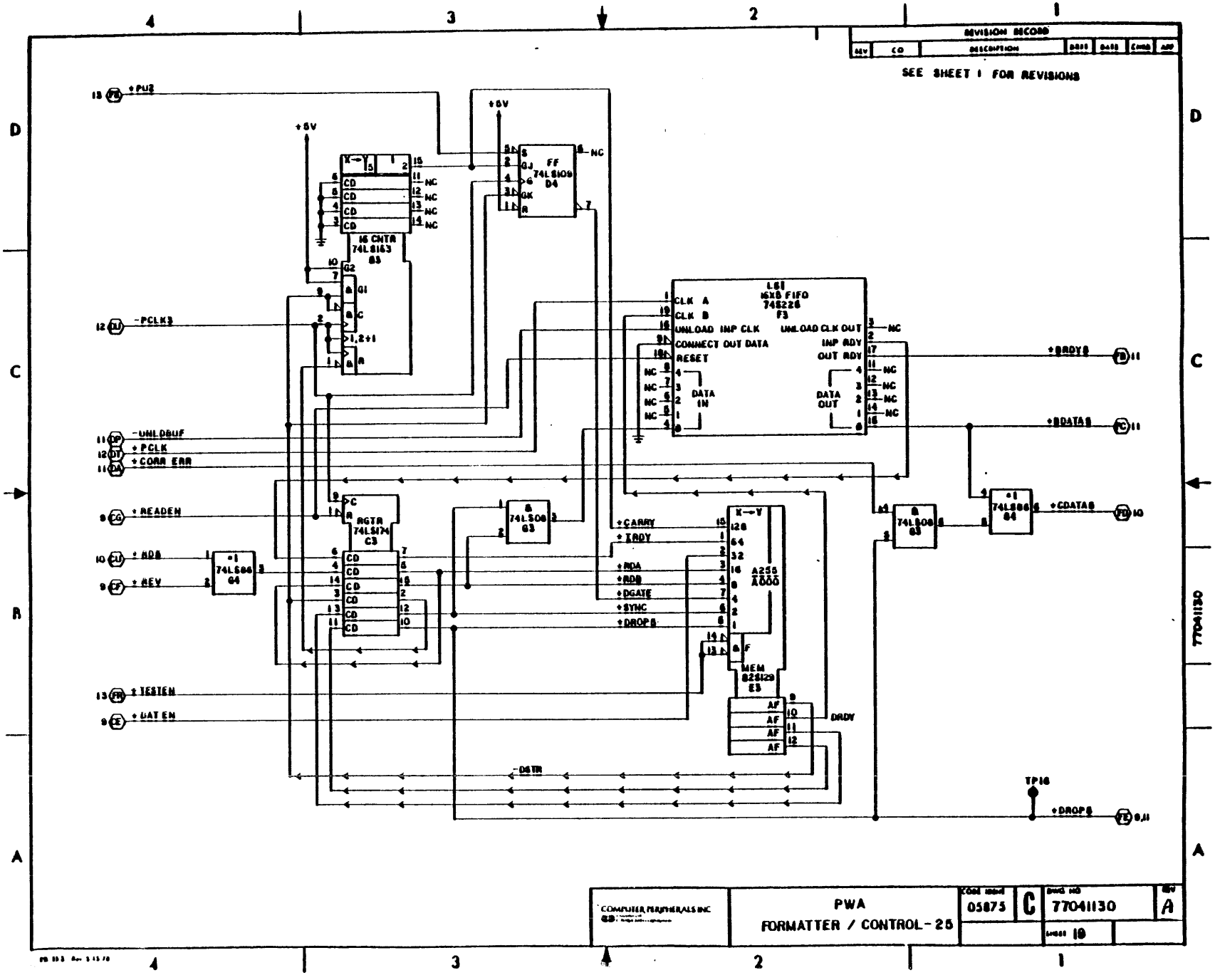
REVISION RECORD
SEE SHEET 1 FOR REVISIONS
+PU2
+5V
-PCLK3
-UNLDBUF
+PCLK
+CORR ERR
+READEN
+ADA
+REV
+TESTEN
+DATEN
16 CNTR 74LS163 B3
RGTR 74LS174 C3
74LS109 D4
LSI 16X8 FIFO 74S226 F3
A256 A000
MEM 82S129 E3
+CARRY
+IRDY
+ADA
+ADB
+DGATE
+SYNC
+DROP8
-DSTR
DRDY
+RRDY8
+RDATA8
+CDATA8
TP16
COMPUTER PERIPHERALS INC
PWA
FORMATTER / CONTROL-25
05875
C
77041130
A
SHEET 10

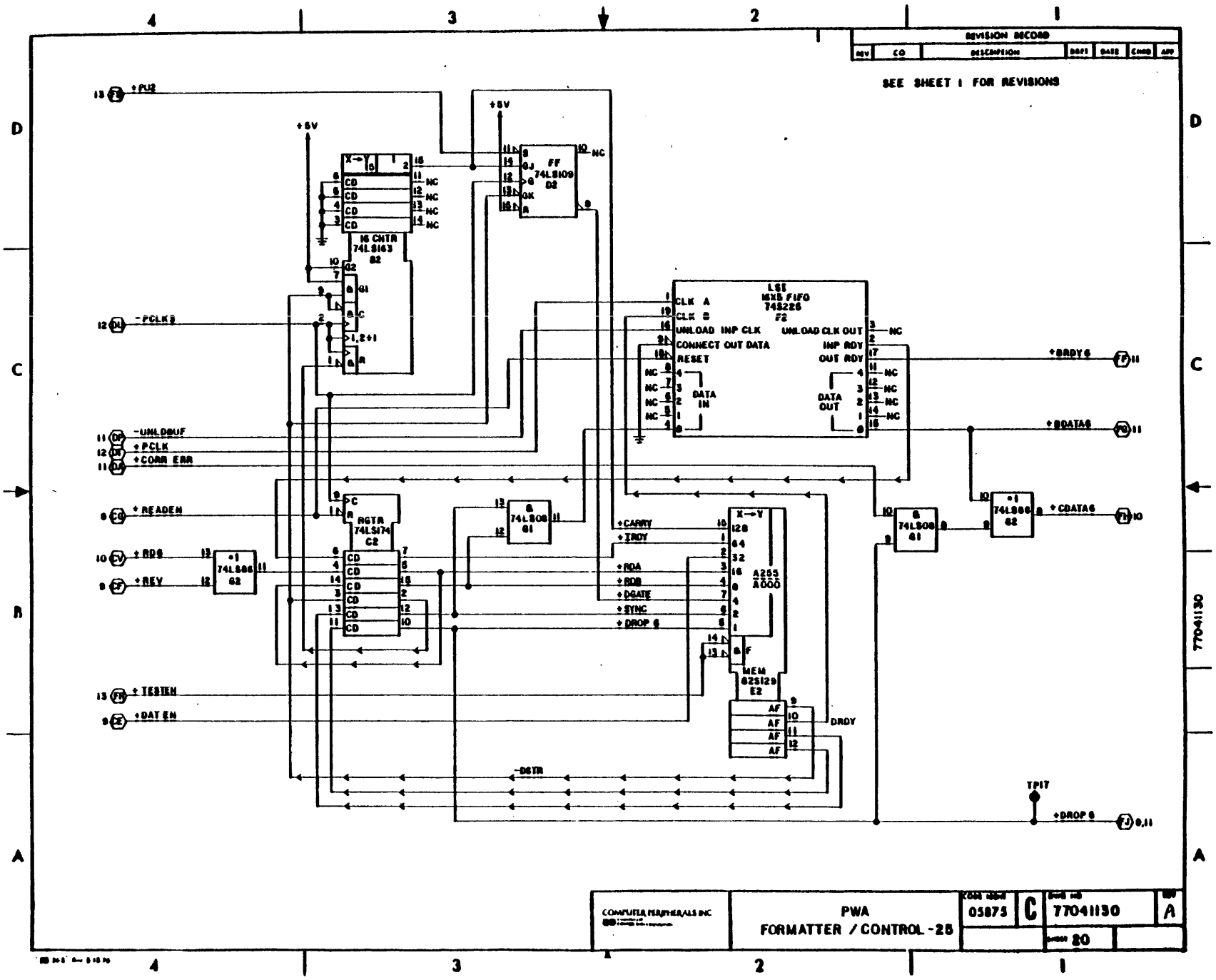
REVISION RECORD
SEE SHEET 1 FOR REVISIONS
+PU2
+5V
-PCLK8
-UNLDBUF
+PCLK
+CORR ERR
+READEN
+RDS
+REV
+TESTEN
+DAT EN
-DSTR
+CARRY
+TRDY
+RDA
+RDB
+DGATE
+SYNC
+DROP 6
DRDY
+BRDY 6
+BDATA6
+CDATA6
TP17
+DROP 6
16 CNTR 74LS163 B2
RGTR 74LS174 C2
FF 74LS109 D2
LSI MXB FIFO 745226 F2
MEM 825129 E2
A255
74LS86 G2
74LS08 G1
COMPUTER PERIPHERALS INC
PWA
FORMATTER / CONTROL-25
03875
C
77041130
A
SHEET 20

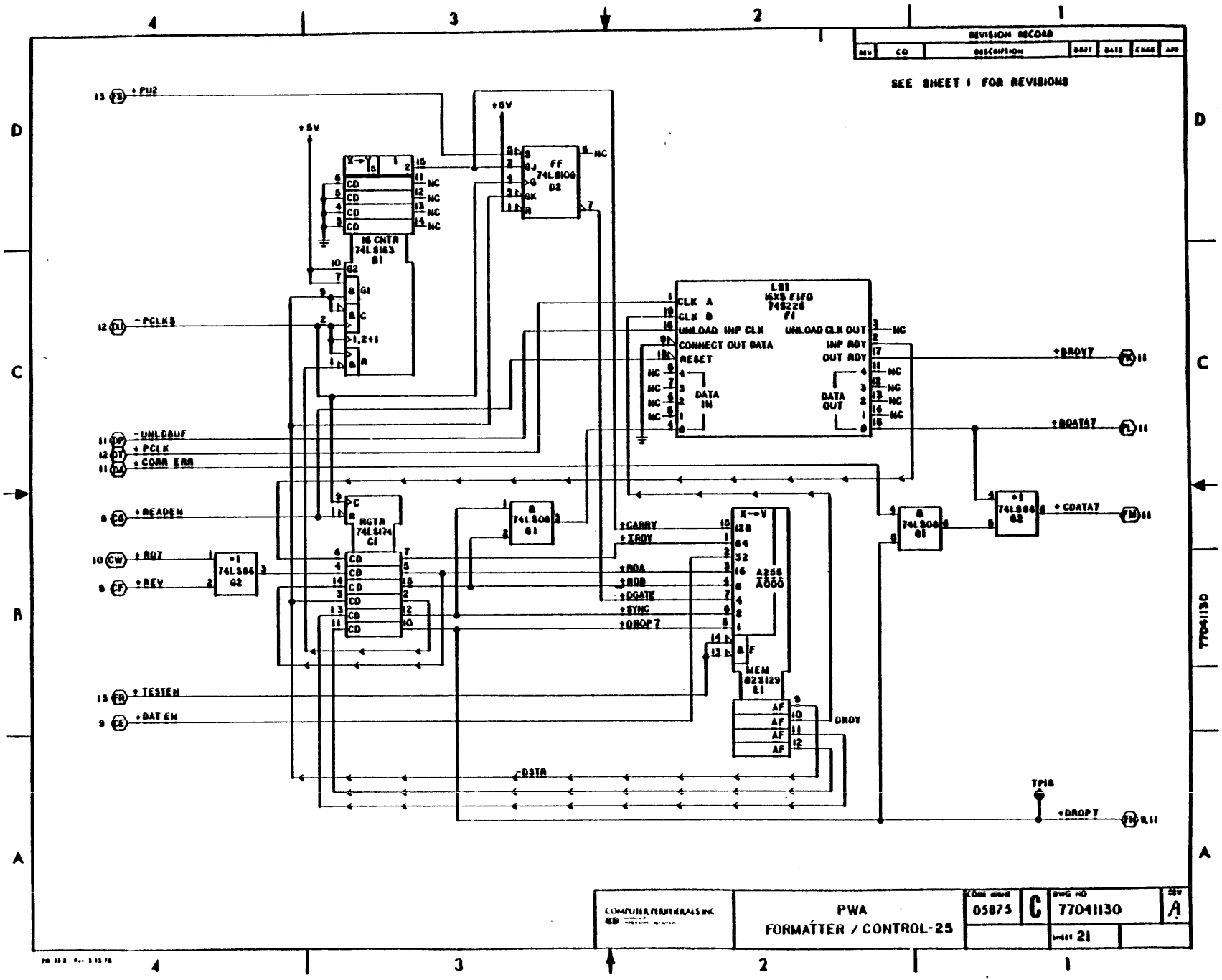
REVISION RECORD
SEE SHEET 1 FOR REVISIONS
+PU2
-PCLK3
-UNLDBUF
+PCLK
+CORR ERR
+READEN
+RD7
+REV
+TESTEN
+DAT EN
+5V
16 CNTR 74LS163 B1
FF 74LS109 D2
LSI 16X5 FIFO 74S225 F1
CLK A
CLK B
UNLOAD INP CLK
CONNECT OUT DATA
RESET
UNLOAD CLK OUT
INP RDY
OUT RDY
DATA IN
DATA OUT
RGTR 74LS174 C1
74LS86 G2
74LS08 G1
74LS86 G2
74LS08 G1
+CARRY
+IRDY
+RDA
+RDB
+DGATE
+SYNC
+DROP7
A255 A000
MEM 82S129 E1
DRDY
-DSTR
+BRDY7
+BDATA7
+CDATA7
+DROP7
TP18
77041130
COMPUTER PERIPHERALS INC
PWA
FORMATTER / CONTROL-25
05875
C
77041130
A
SHEET 21

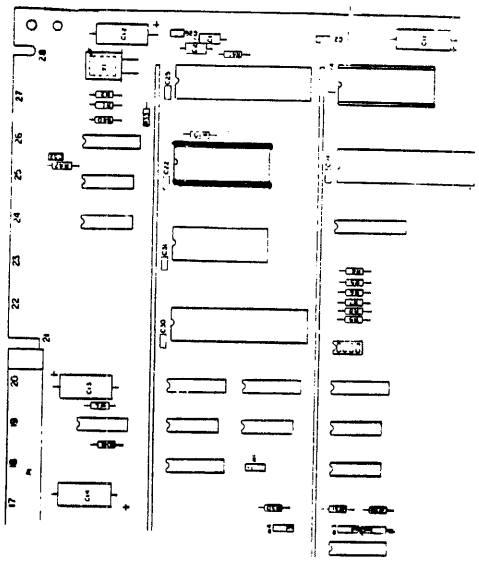

REFERENCE SHEET 1A

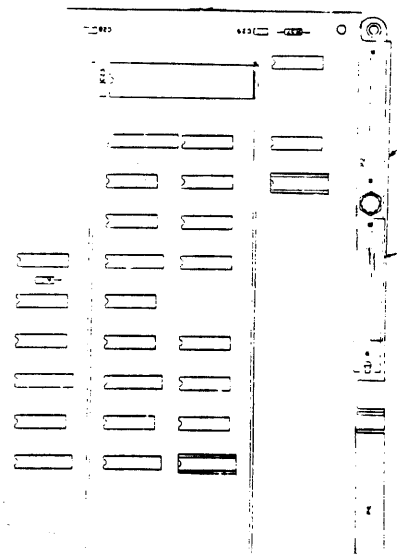

REFERENCE SHEET 1B

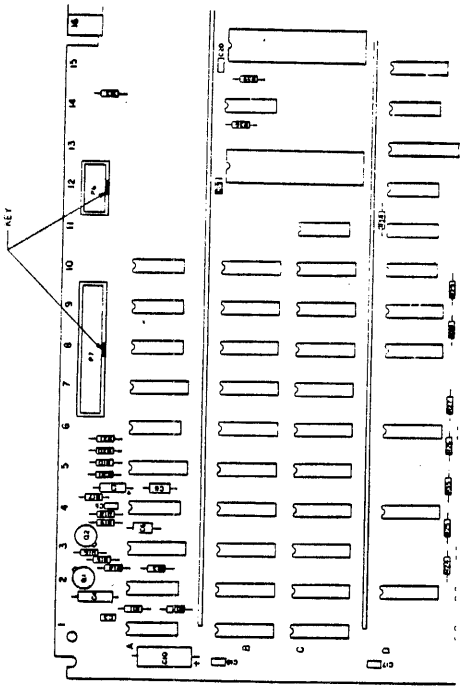

REFERENCE SHEET 1C

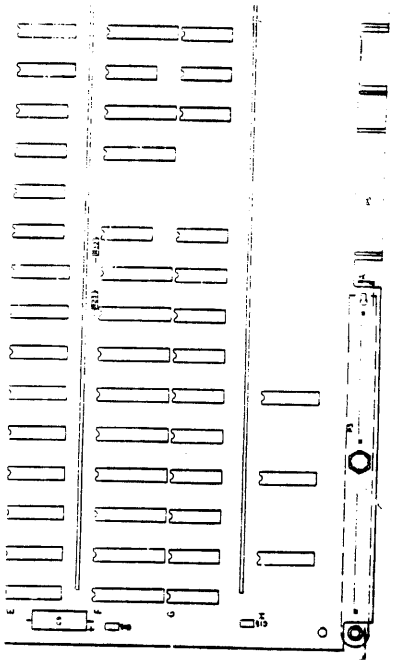

REFERENCE SHEET 1D

FORMATTER - CONTROL PWA P/N 77042070 LAYOUT (SHEET 1)

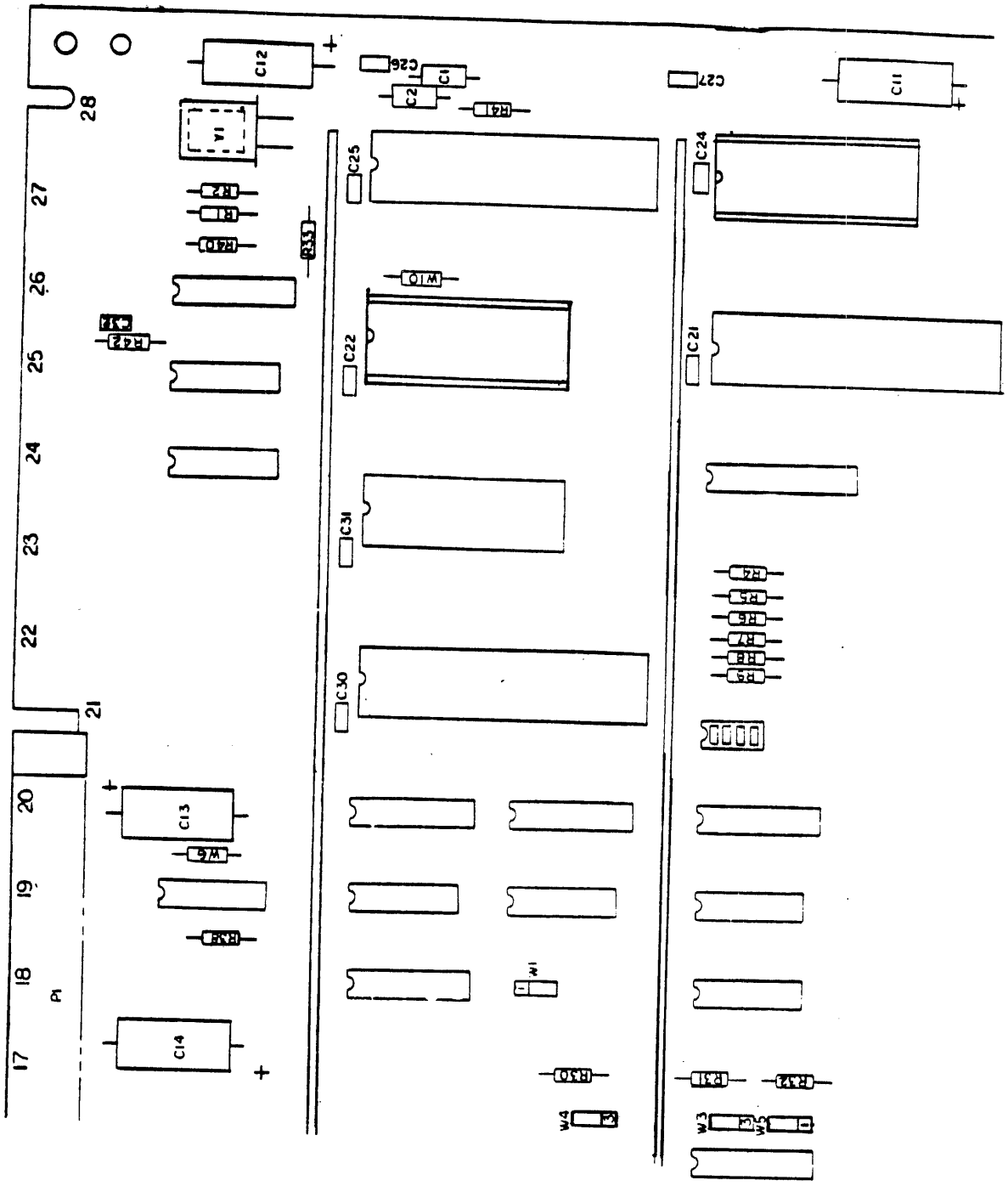

FORMATTER - CONTROL PWA P/N 77042070 LAYOUT (SHEET 1A)

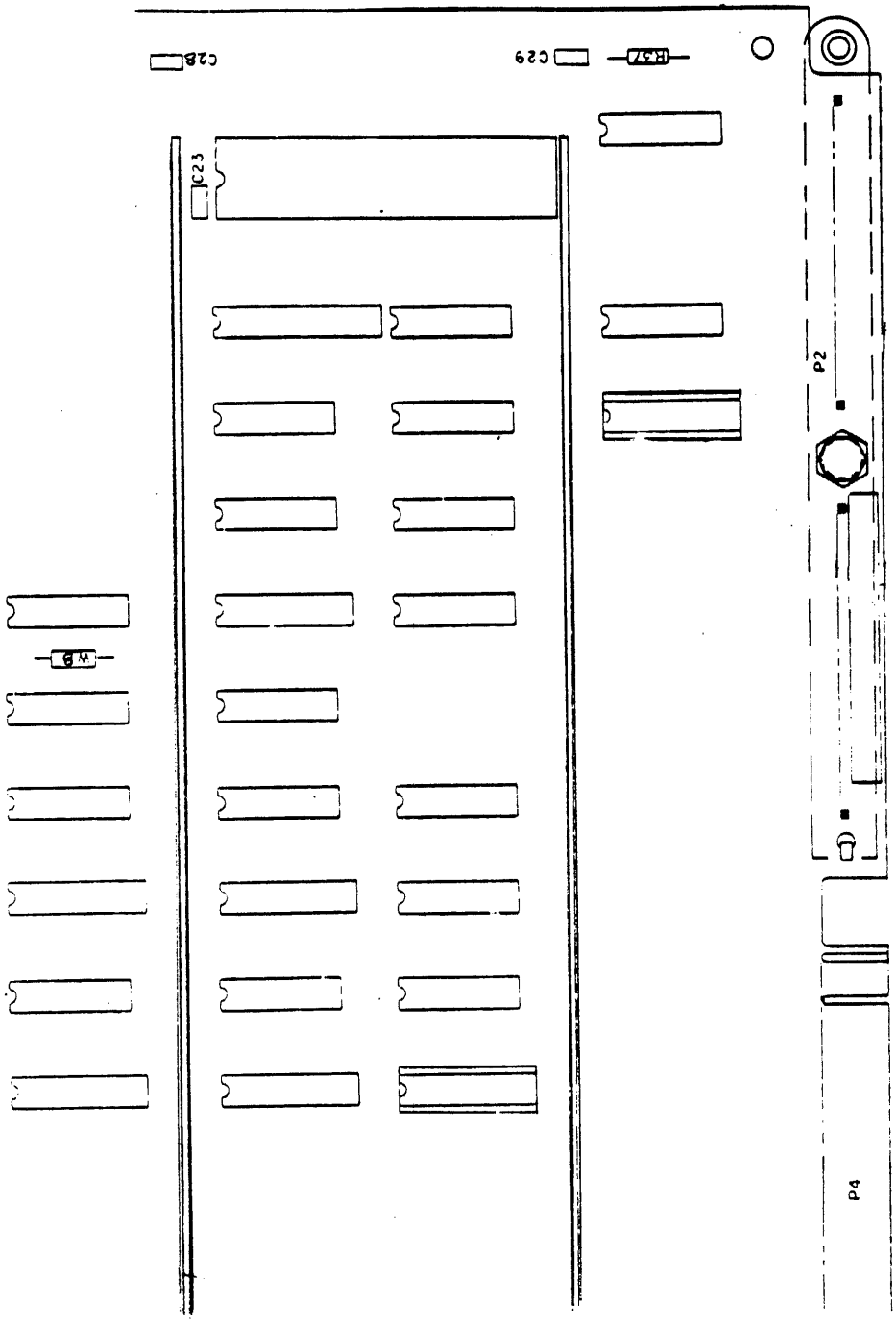

FORMATTER - CONTROL PWA LAYOUT P/N 77042070 (SHEET 1B)

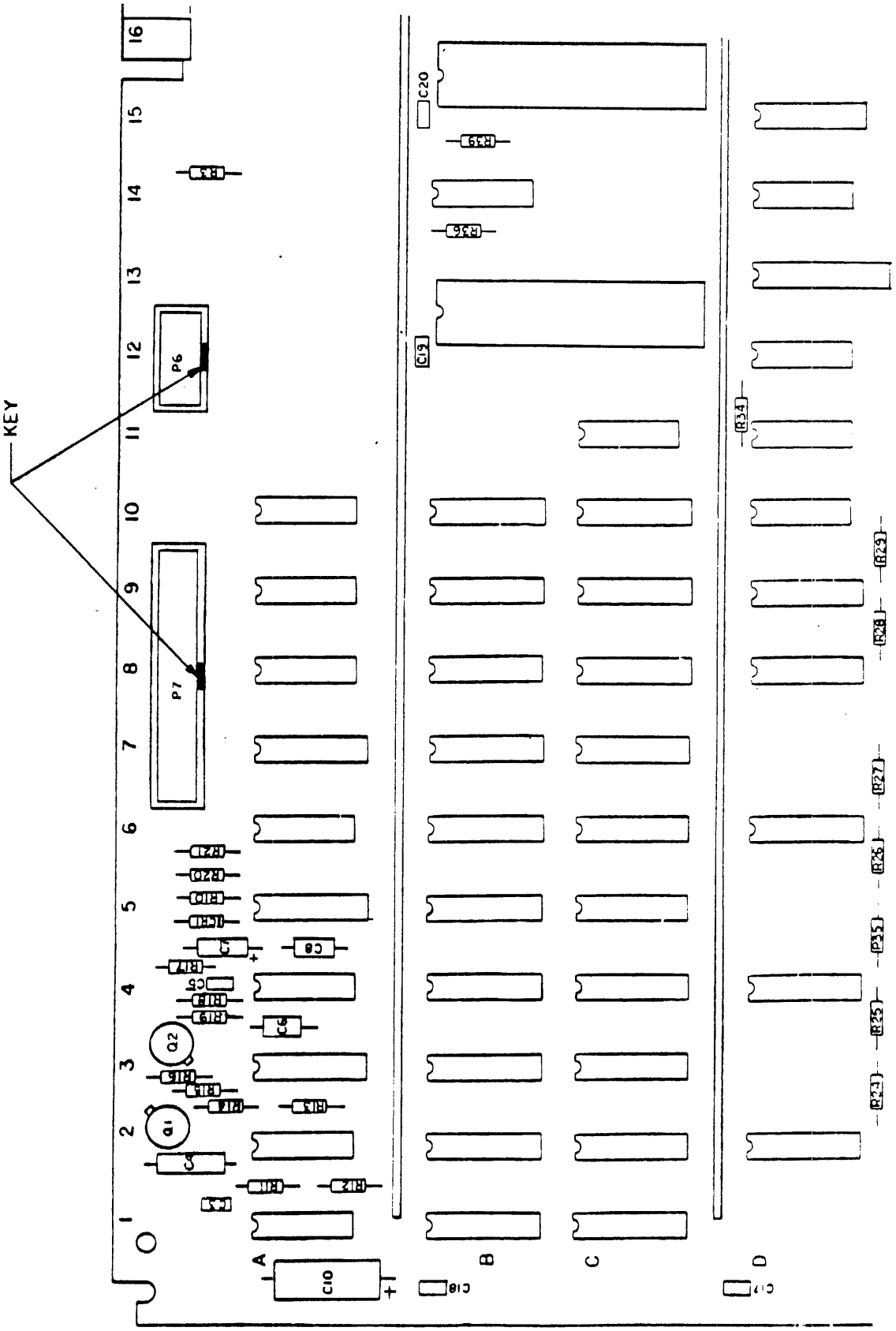

FORMATTER - CONTROL PWA P/N 77042070 LAYOUT (SHEET 1C)

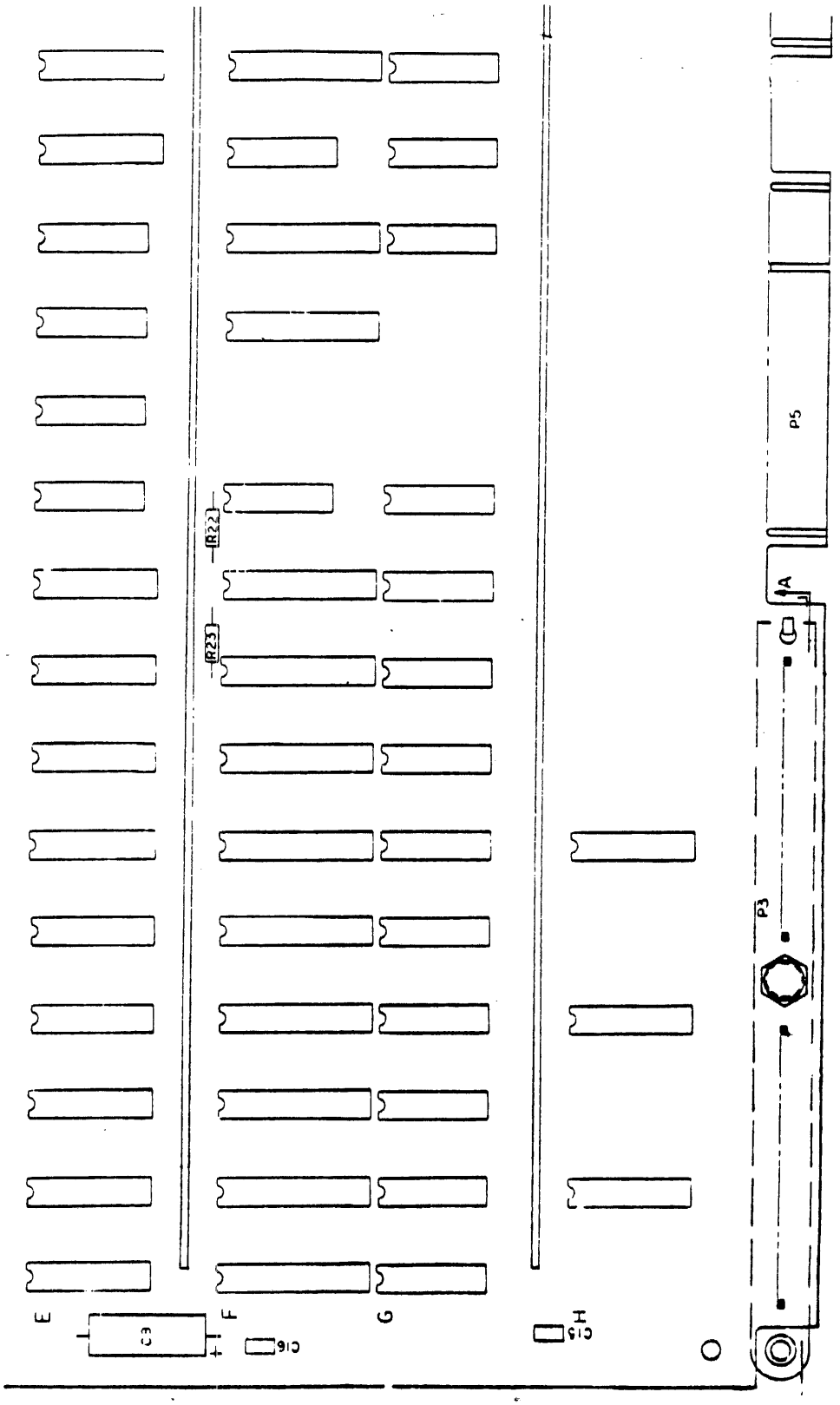

FORMATTER - CONTROL PWA P/N 77042070 LAYOUT (SHEET 1D)

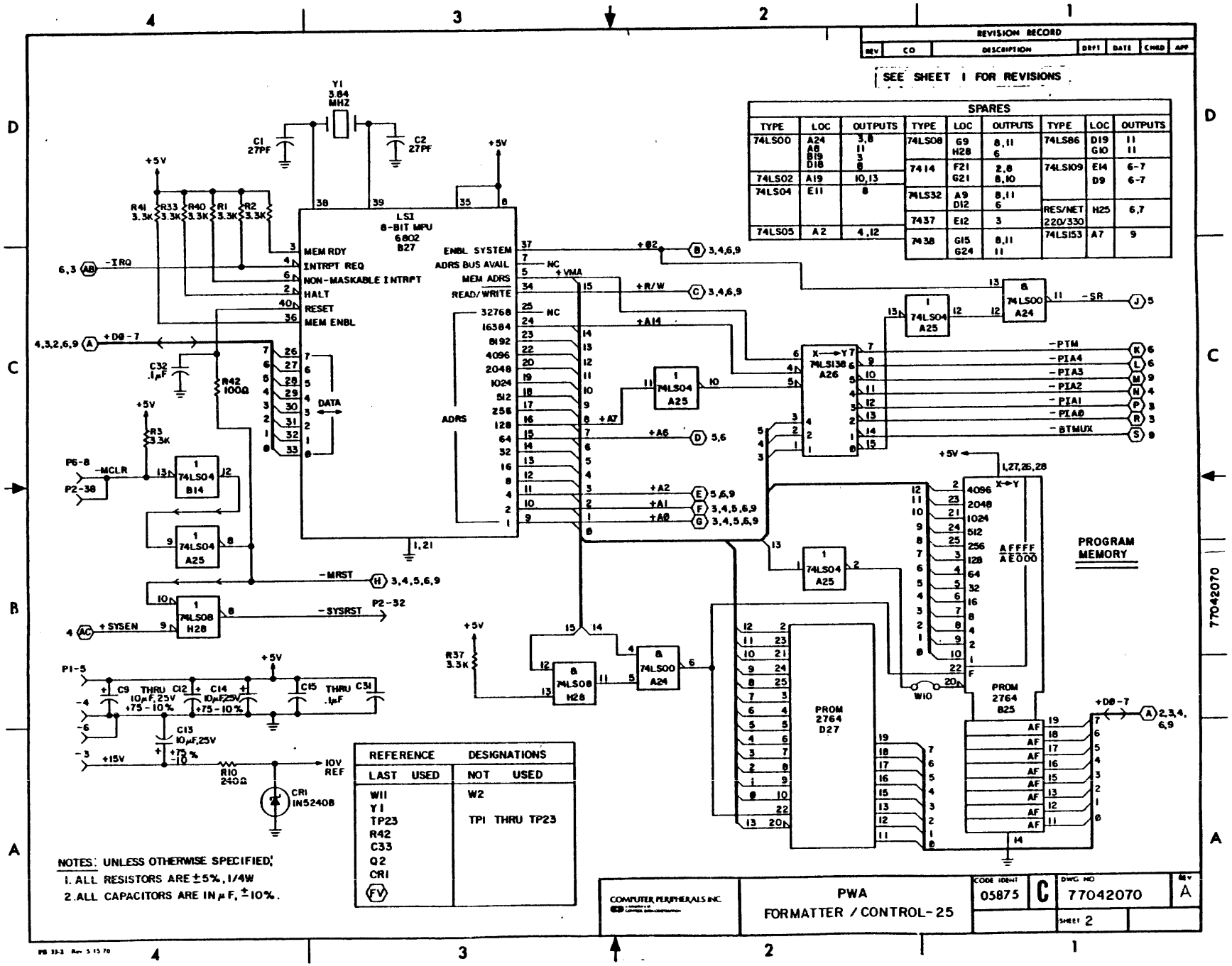
REVISION RECORD
REV | CO | DESCRIPTION | DRFT | DATE | CHKD | APP
SEE SHEET 1 FOR REVISIONS
SPARES
TYPE | LOC | OUTPUTS | TYPE | LOC | OUTPUTS | TYPE | LOC | OUTPUTS
74LS00 | A24 A8 B19 D18 | 3,8 11 3 6 | 74LS08 | G9 H28 | 8,11 6 | 74LS86 | D19 G10 | 11 11
74LS02 | A19 | 10,13 | 7414 | F21 G21 | 2,8 8,10 | 74LS109 | E14 D9 | 6-7 6-7
74LS04 | E11 | 8 | 74LS32 | A9 D12 | 8,11 6 | RES/NET 220/330 | H25 | 6,7
74LS05 | A2 | 4,12 | 7437 | E12 | 3 | 74LS153 | A7 | 9
7438 | G15 G24 | 8,11 11
Y1 3.84 MHZ
C1 27PF
C2 27PF
+5V
R41 3.3K
R33 3.3K
R40 3.3K
R1 3.3K
R2 3.3K
LSI 8-BIT MPU 6802 B27
MEM RDY
INTRPT REQ
NON-MASKABLE INTRPT
HALT
RESET
MEM ENBL
ENBL SYSTEM
ADRS BUS AVAIL
MEM ADRS
READ/WRITE
-IRQ
+Ø2
+VMA
+R/W
+A14
+A7
+A6
+A2
+A1
+A0
ADRS
32768
16384
8192
4096
2048
1024
512
256
128
64
32
16
8
4
2
1
+D0-7
DATA
C32 .1μF
R42 100Ω
R3 3.3K
-MCLR
P6-8
P2-38
-MRST
-SYSRST
P2-32
+SYSEN
-SR
-PTM
-PIA4
-PIA3
-PIA2
-PIA1
-PIA0
-BTMUX
74LS04 A25
74LS08 H28
74LS00 A24
74LS138 A26
PROGRAM MEMORY
AFFFF AE000
PROM 2764 D27
PROM 2764 825
WIO
R37 3.3K
P1-5
C9 THRU C12 10μF,25V +75-10%
C14 10μF25V +75-10%
C15 THRU C31 .1μF
C13 10μF,25V +75 -10%
+15V
R10 240Ω
10V REF
CR1 IN52408
NOTES: UNLESS OTHERWISE SPECIFIED,
1. ALL RESISTORS ARE ±5%, 1/4W
2. ALL CAPACITORS ARE IN μF, ±10%.
REFERENCE DESIGNATIONS
LAST USED | NOT USED
W11 | W2
Y1 | TP1 THRU TP23
TP23
R42
C33
Q2
CR1
FV
COMPUTER PERIPHERALS INC.
PWA
FORMATTER / CONTROL-25
CODE IDENT 05875
C
DWG NO 77042070
REV A
SHEET 2

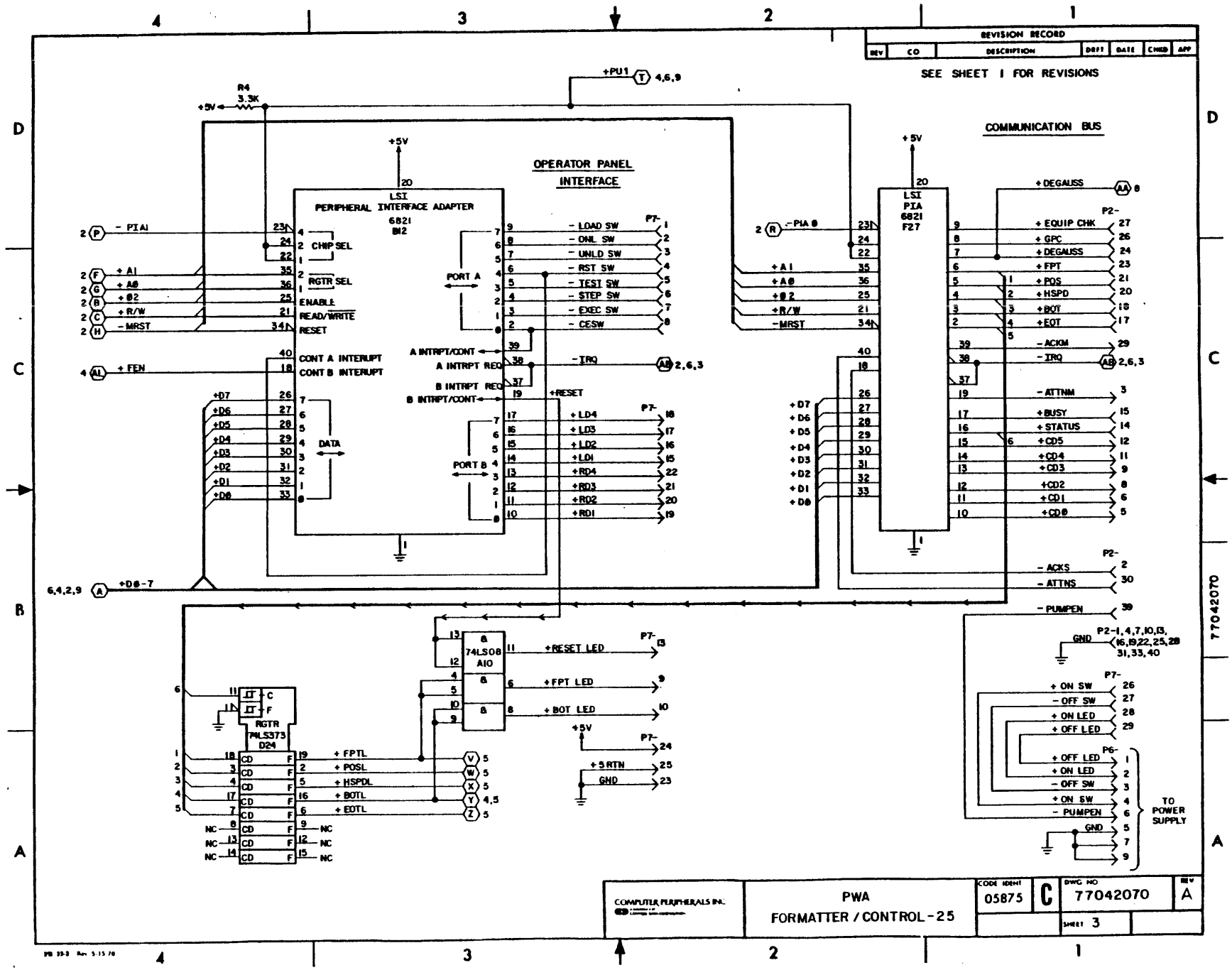
REVISION RECORD
REV
CO
DESCRIPTION
DRFT
DATE
CHKD
APP
SEE SHEET 1 FOR REVISIONS
COMMUNICATION BUS
OPERATOR PANEL INTERFACE
LSI PERIPHERAL INTERFACE ADAPTER 6821 BI2
LSI PIA 6821 F27
+5V
+PU1
R4 3.3K
- PIA1
- PIA0
+A1
+A0
+Ø2
+R/W
-MRST
CHIP SEL
RGTR SEL
ENABLE
READ/WRITE
RESET
CONT A INTERUPT
CONT B INTERUPT
+FEN
DATA
PORT A
PORT B
A INTRPT/CONT
A INTRPT REQ
B INTRPT REQ
B INTRPT/CONT
-IRQ
+RESET
- LOAD SW
- ONL SW
- UNLD SW
- RST SW
- TEST SW
- STEP SW
- EXEC SW
- CESW
+LD4
+LD3
+LD2
+LD1
+RD4
+RD3
+RD2
+RD1
+D7
+D6
+D5
+D4
+D3
+D2
+D1
+D0
+D0-7
+DEGAUSS
+EQUIP CHK
+GPC
+DEGAUSS
+FPT
+POS
+HSPD
+BOT
+EOT
-ACKM
-IRQ
-ATTNM
+BUSY
+STATUS
+CD5
+CD4
+CD3
+CD2
+CD1
+CD0
-ACKS
-ATTNS
-PUMPEN
GND
P2-1,4,7,10,13,16,19,22,25,28,31,33,40
+ON SW
-OFF SW
+ON LED
+OFF LED
TO POWER SUPPLY
74LS08 AIO
+RESET LED
+FPT LED
+BOT LED
+5V
+5 RTN
RGTR 74LS373 D24
+FPTL
+POSL
+HSPDL
+BOTL
+EOTL
NC
COMPUTER PERIPHERALS INC.
PWA
FORMATTER / CONTROL-25
CODE IDENT 05875
C
DWG NO 77042070
REV A
SHEET 3

77042070

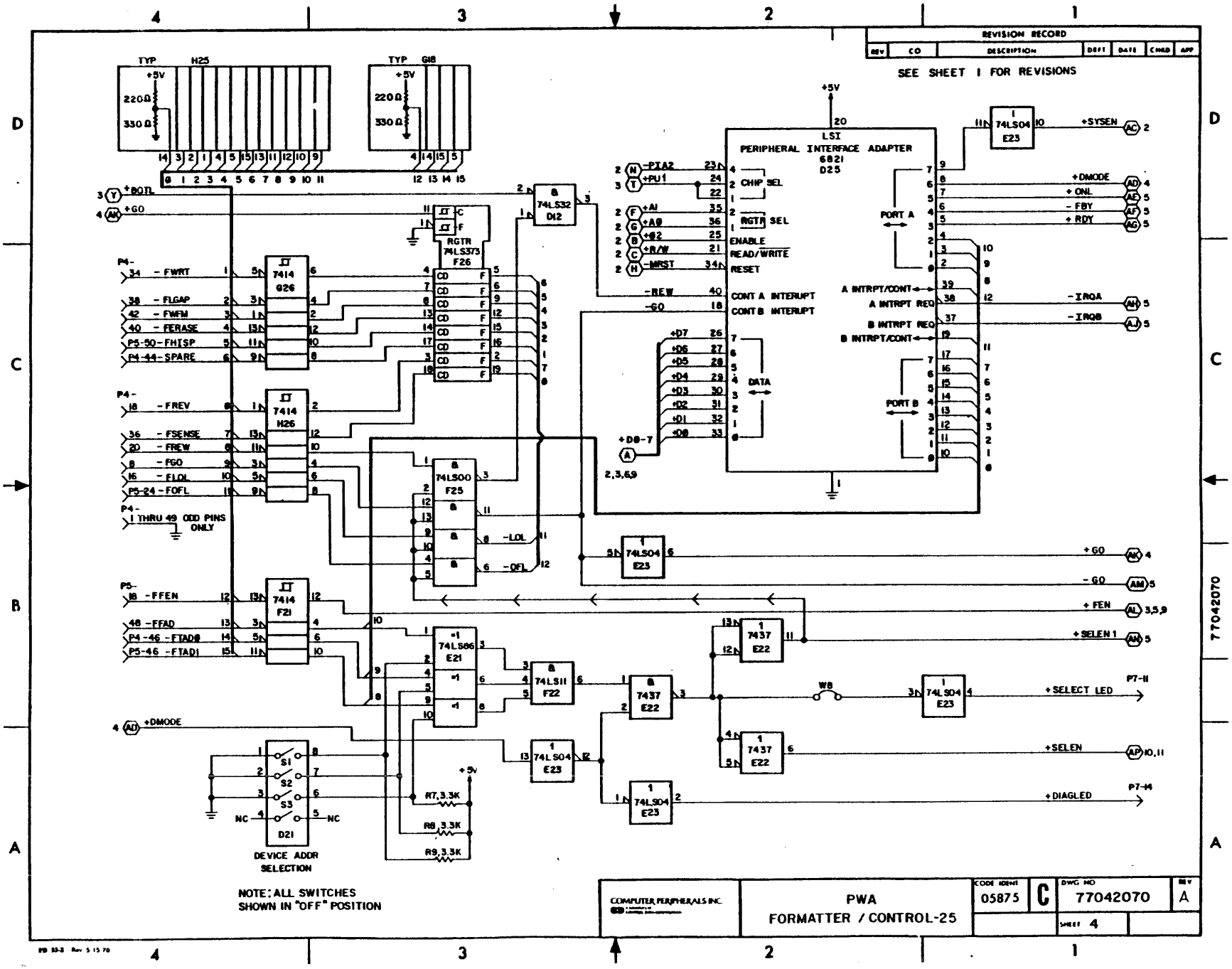
REVISION RECORD
SEE SHEET 1 FOR REVISIONS
LSI PERIPHERAL INTERFACE ADAPTER 6821 D25
PORT A
PORT B
DATA
RGTR 74LS373 F26
DEVICE ADDR SELECTION
NOTE: ALL SWITCHES SHOWN IN "OFF" POSITION
COMPUTER PERIPHERALS INC.
PWA FORMATTER / CONTROL-25
CODE IDENT 05875
DWG NO 77042070
REV A
SHEET 4
77042070

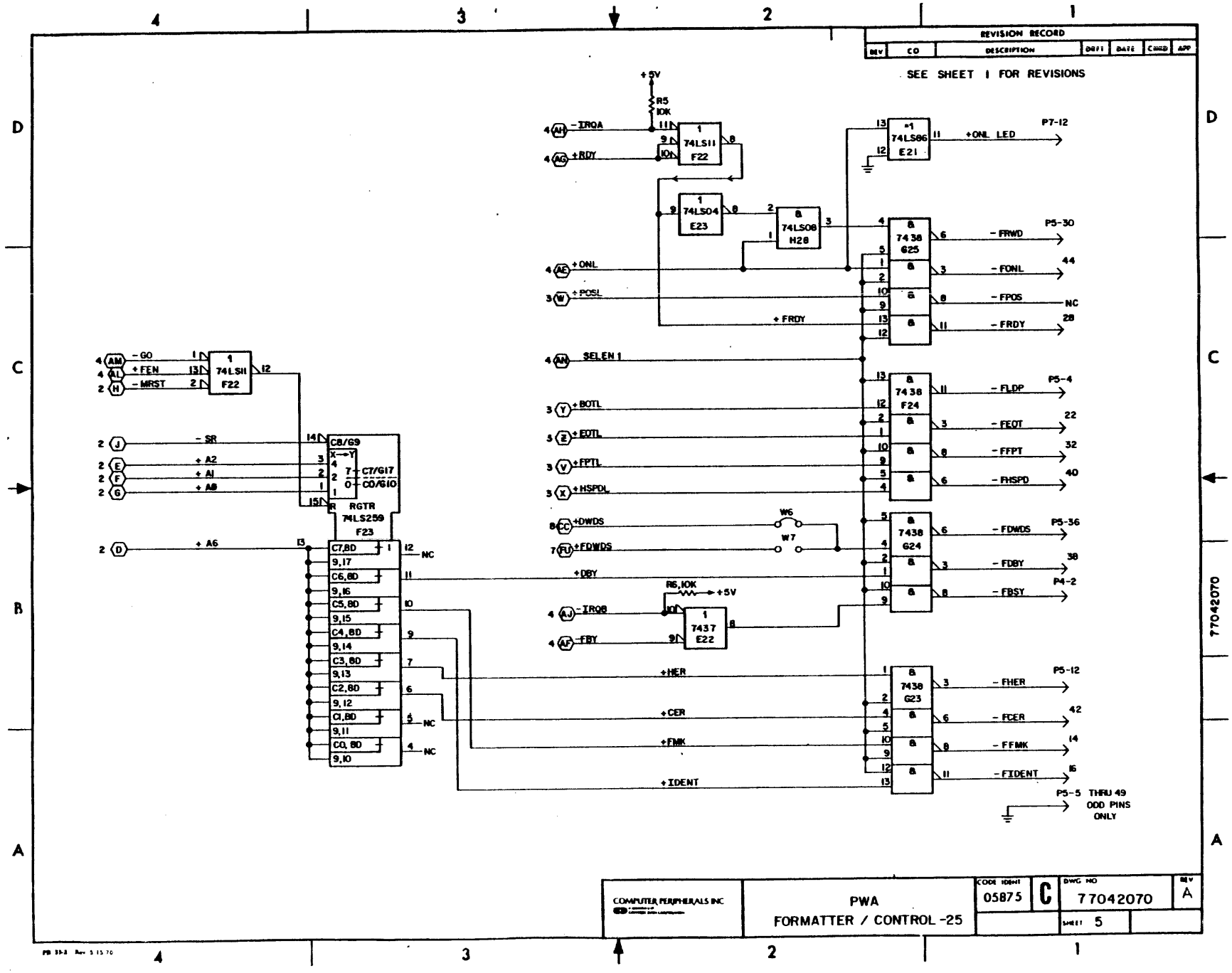
REVISION RECORD
REV
CO
DESCRIPTION
DRFT
DATE
CHKD
APP
SEE SHEET 1 FOR REVISIONS
+5V
R5
10K
-IRQA
+RDY
1
74LS11
F22
1
74LS04
E23
8
74LS08
H28
*1
74LS86
E21
+ONL LED
P7-12
8
7438
G25
-FRWD
P5-30
-FONL
44
-FPOS
NC
-FRDY
28
+ONL
+POSL
+FRDY
SELEN 1
8
7438
F24
-FLDP
P5-4
-FEOT
22
-FFPT
32
-FHSPD
40
+BOTL
+EOTL
+FPTL
+HSPDL
8
7438
G24
-FDWDS
P5-36
-FDBY
38
-FBSY
P4-2
+DWDS
+FDWDS
W6
W7
+DBY
R6,10K
+5V
-IRQB
-FBY
1
7437
E22
8
7438
G23
-FHER
P5-12
-FCER
42
-FFMK
14
-FIDENT
16
P5-5 THRU 49
ODD PINS
ONLY
-GO
+FEN
-MRST
1
74LS11
F22
-SR
+A2
+A1
+A0
+A6
C8/G9
C7/G17
C0/G10
RGTR
74LS259
F23
C7,8D
9,17
C6,8D
9,16
C5,8D
9,15
C4,8D
9,14
C3,8D
9,13
C2,8D
9,12
C1,8D
9,11
C0,8D
9,10
NC
+HER
+CER
+FMK
+IDENT
COMPUTER PERIPHERALS INC
PWA
FORMATTER / CONTROL -25
CODE IDENT
05875
C
DWG NO
77042070
REV
A
SHEET 5
77042070

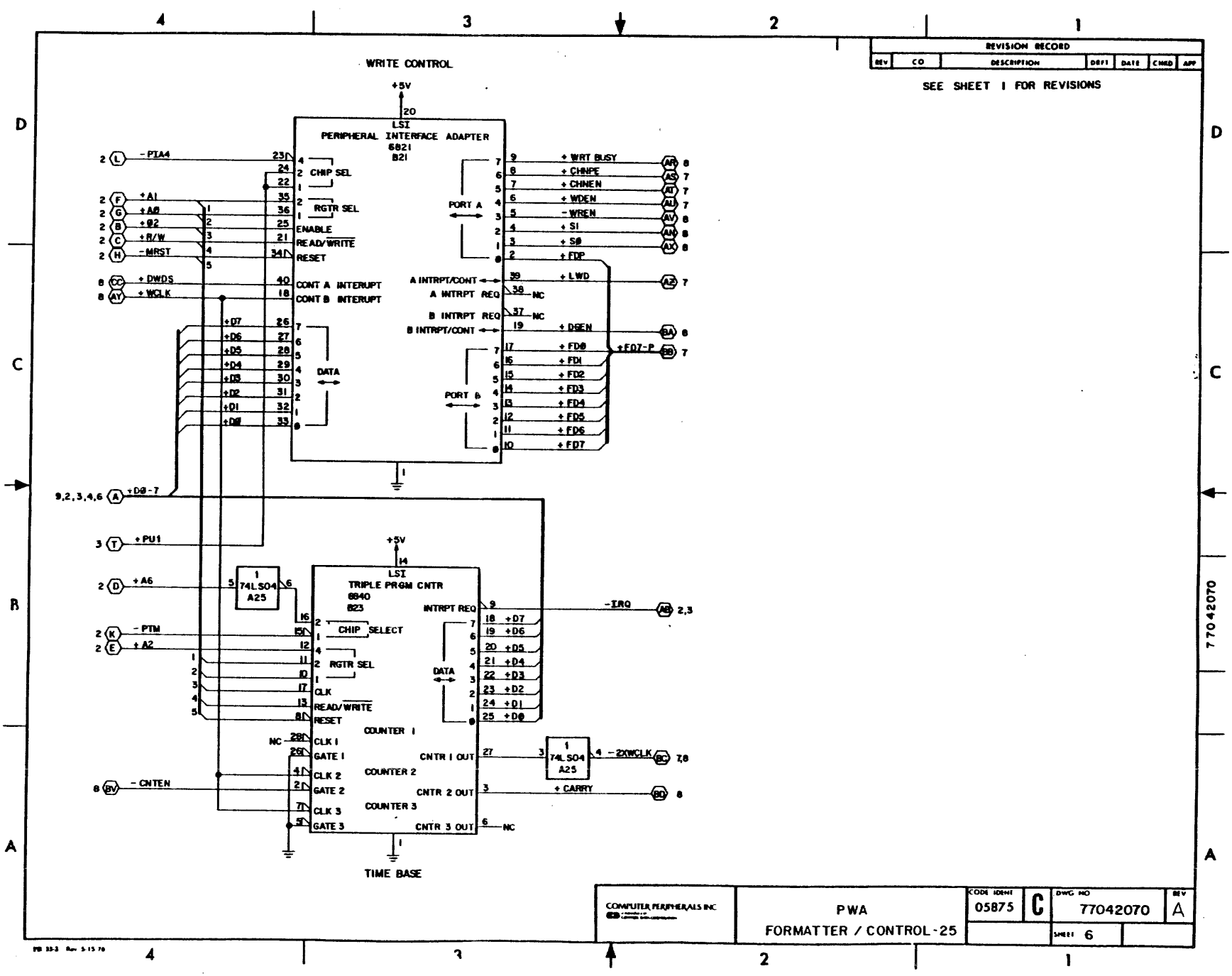
WRITE CONTROL
REVISION RECORD
REV | CO | DESCRIPTION | DRFT | DATE | CHKD | APP
SEE SHEET 1 FOR REVISIONS
+5V
LSI
PERIPHERAL INTERFACE ADAPTER
6821
B21
CHIP SEL
RGTR SEL
ENABLE
READ/WRITE
RESET
CONT A INTERUPT
CONT B INTERUPT
DATA
PORT A
PORT B
A INTRPT/CONT
A INTRPT REQ
B INTRPT REQ
B INTRPT/CONT
-PTA4
+A1
+A0
+Ø2
+R/W
-MRST
+DWDS
+WCLK
+D7
+D6
+D5
+D4
+D3
+D2
+D1
+D0
+D0-7
+WRT BUSY
+CHNPE
+CHNEN
+WDEN
-WREN
+S1
+S0
+FDP
+LWD
+DSEN
+FD0
+FD1
+FD2
+FD3
+FD4
+FD5
+FD6
+FD7
+FD7-P
+PU1
+A6
-PTM
+A2
-CNTEN
LSI
TRIPLE PRGM CNTR
6840
B23
CHIP SELECT
RGTR SEL
CLK
READ/WRITE
RESET
COUNTER 1
COUNTER 2
COUNTER 3
CLK 1
GATE 1
CLK 2
GATE 2
CLK 3
GATE 3
INTRPT REQ
DATA
CNTR 1 OUT
CNTR 2 OUT
CNTR 3 OUT
74LS04
A25
-IRQ
-2XWCLK
+CARRY
TIME BASE
COMPUTER PERIPHERALS INC
PWA
FORMATTER / CONTROL-25
CODE IDENT 05875
C
DWG NO 77042070
REV A
SHEET 6

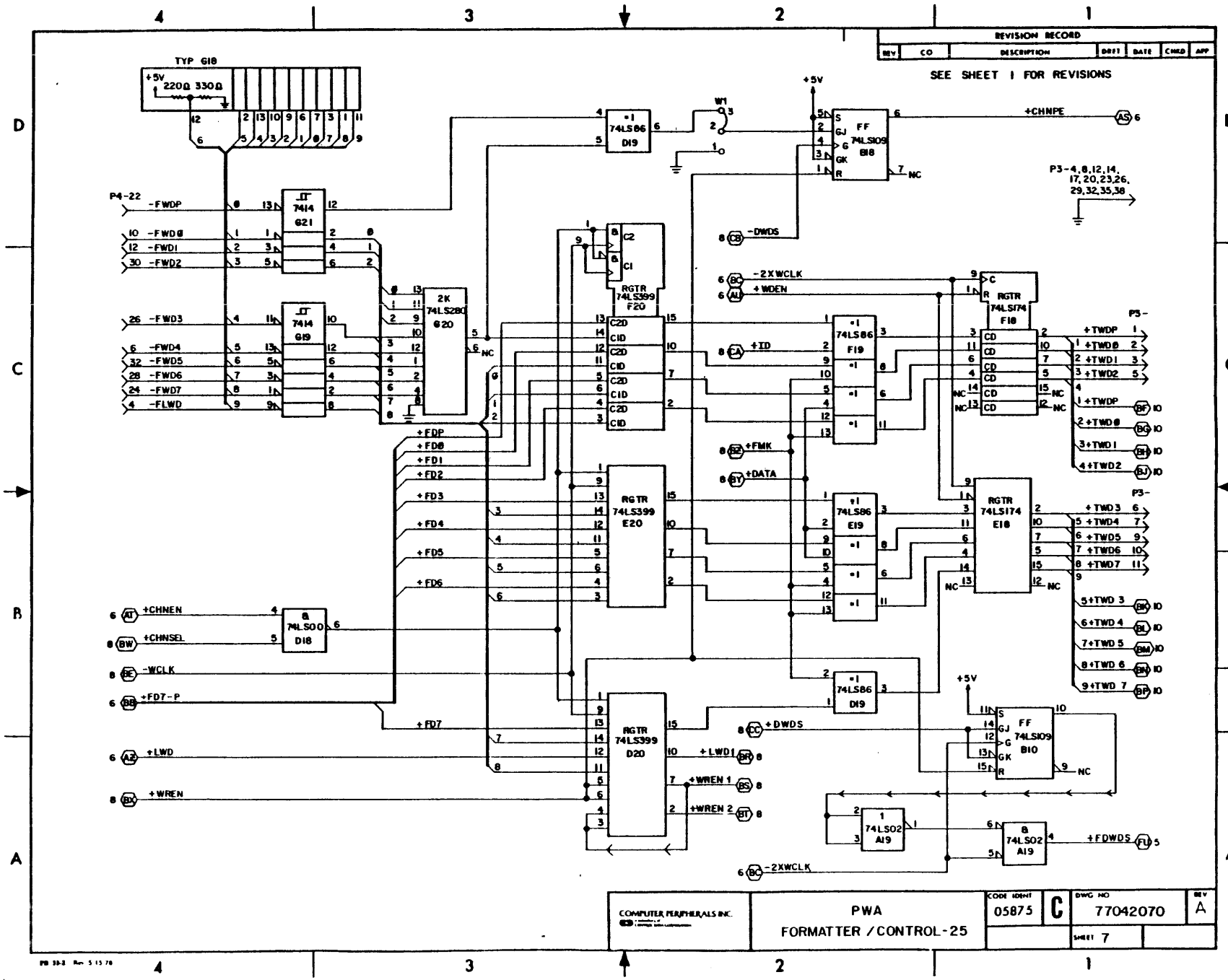
REVISION RECORD
REV | CO | DESCRIPTION | DRFT | DATE | CHKD | APP
SEE SHEET 1 FOR REVISIONS
TYP G18
+5V
220Ω 330Ω
P4-22
-FWDP
-FWD0
-FWD1
-FWD2
-FWD3
-FWD4
-FWD5
-FWD6
-FWD7
-FLWD
7414 G21
7414 G19
2K 74LS280 G20
+FDP
+FD0
+FD1
+FD2
+FD3
+FD4
+FD5
+FD6
+FD7
+FD7-P
RGTR 74LS399 F20
RGTR 74LS399 E20
RGTR 74LS399 D20
74LS86 D19
74LS00 D18
+CHNEN
+CHNSEL
-WCLK
+LWD
+WREN
+LWD1
+WREN 1
+WREN 2
W1
FF 74LS109 B18
+CHNPE
P3-4,8,12,14, 17,20,23,26, 29,32,35,38
-DWDS
-2XWCLK
+WDEN
+ID
+FMK
+DATA
74LS86 F19
74LS86 E19
RGTR 74LS174 F18
RGTR 74LS174 E18
+TWDP
+TWD0
+TWD1
+TWD2
+TWD3
+TWD4
+TWD5
+TWD6
+TWD7
+DWDS
FF 74LS109 B10
74LS86 D19
74LS02 A19
+FDWDS
-2XWCLK
COMPUTER PERIPHERALS INC.
PWA
FORMATTER / CONTROL-25
CODE IDENT 05875
C
DWG NO 77042070
REV A
SHEET 7

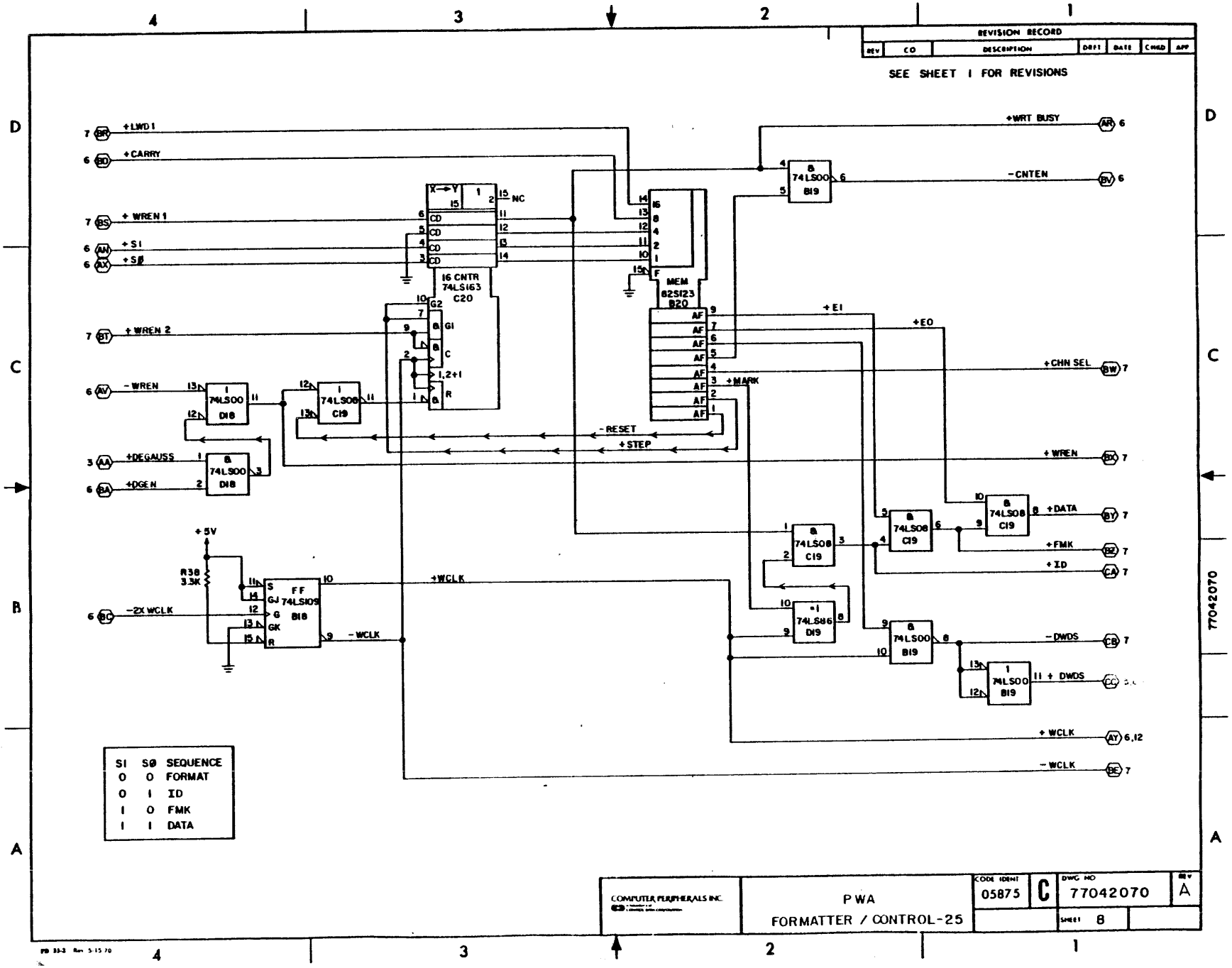
REVISION RECORD
REV CO DESCRIPTION DRFT DATE CHKD APP
SEE SHEET 1 FOR REVISIONS
+LWD1
+CARRY
+WREN 1
+S1
+SØ
+WREN 2
-WREN
+DEGAUSS
+DGEN
-2X WCLK
+5V
R38 3.3K
16 CNTR 74LS163 C20
MEM 82S123 B20
74LS00 D18
74LS08 C19
74LS109 B18
74LS86 D19
74LS00 B19
+WRT BUSY
-CNTEN
+EI
+EO
+CHN SEL
+MARK
-RESET
+STEP
+WREN
+DATA
+FMK
+ID
+WCLK
-WCLK
-DWDS
+ DWDS
+ WCLK
-WCLK
SI SØ SEQUENCE
0 0 FORMAT
0 1 ID
1 0 FMK
1 1 DATA
COMPUTER PERIPHERALS INC.
PWA
FORMATTER / CONTROL-25
CODE IDENT 05875
C
DWG NO 77042070
REV A
SHEET 8
77042070

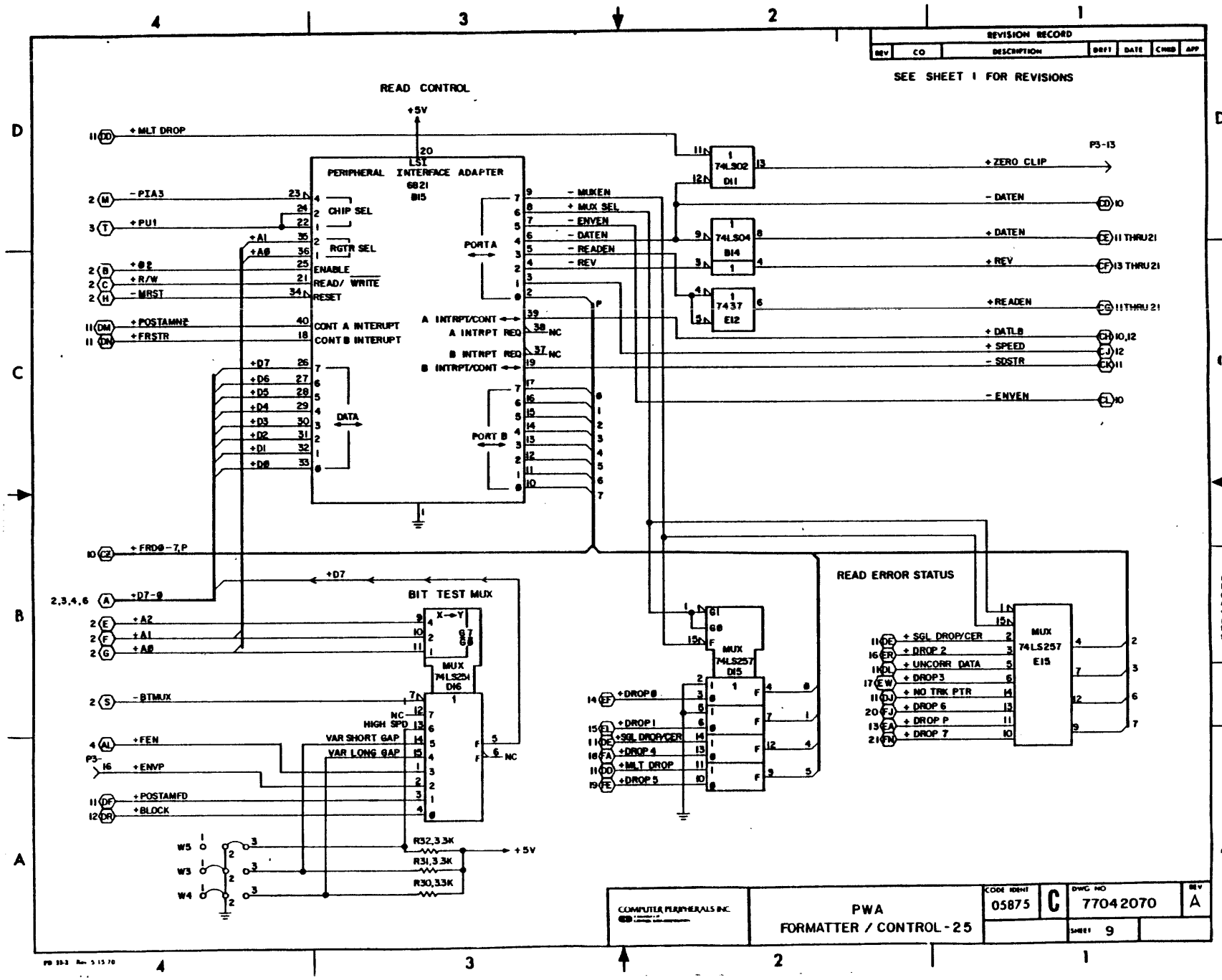
REVISION RECORD
REV
CO
DESCRIPTION
DRFT
DATE
CHKD
APP
SEE SHEET 1 FOR REVISIONS
READ CONTROL
+5V
+MLT DROP
LSI
PERIPHERAL INTERFACE ADAPTER
6821
DI5
-PIA3
CHIP SEL
+PU1
+A1
+A0
RGTR SEL
+Ø2
+R/W
-MRST
ENABLE
READ/ WRITE
RESET
+POSTAMNE
+FRSTR
CONT A INTERUPT
CONT B INTERUPT
PORT A
PORT B
A INTRPT/CONT
A INTRPT REQ
B INTRPT REQ
B INTRPT/CONT
-MUXEN
+MUX SEL
-ENVEN
-DATEN
-READEN
-REV
+D7
+D6
+D5
+D4
+D3
+D2
+D1
+D0
DATA
+FRD0-7,P
+D7-0
BIT TEST MUX
+A2
+A1
+A0
-BTMUX
+FEN
+ENVP
+POSTAMFD
+BLOCK
MUX 74LS254 D16
NC
HIGH SPD
VAR SHORT GAP
VAR LONG GAP
W5
W3
W4
R32,3.3K
R31,3.3K
R30,3.3K
+5V
74LS02 D11
74LS04 B14
7437 E12
+ZERO CLIP
-DATEN
+DATEN
+REV
+READEN
+DATLB
+SPEED
-SDSTR
-ENVEN
P3-13
MUX 74LS257 D15
+DROP 0
+DROP 1
+SGL DROP/CER
+DROP 4
+MLT DROP
+DROP 5
READ ERROR STATUS
MUX 74LS257 E15
+SGL DROP/CER
+DROP 2
+UNCORR DATA
+DROP 3
+NO TRK PTR
+DROP 6
+DROP P
+DROP 7
COMPUTER PERIPHERALS INC.
PWA
FORMATTER / CONTROL-25
CODE IDENT
05875
C
DWG NO
77042070
REV
A
SHEET 9

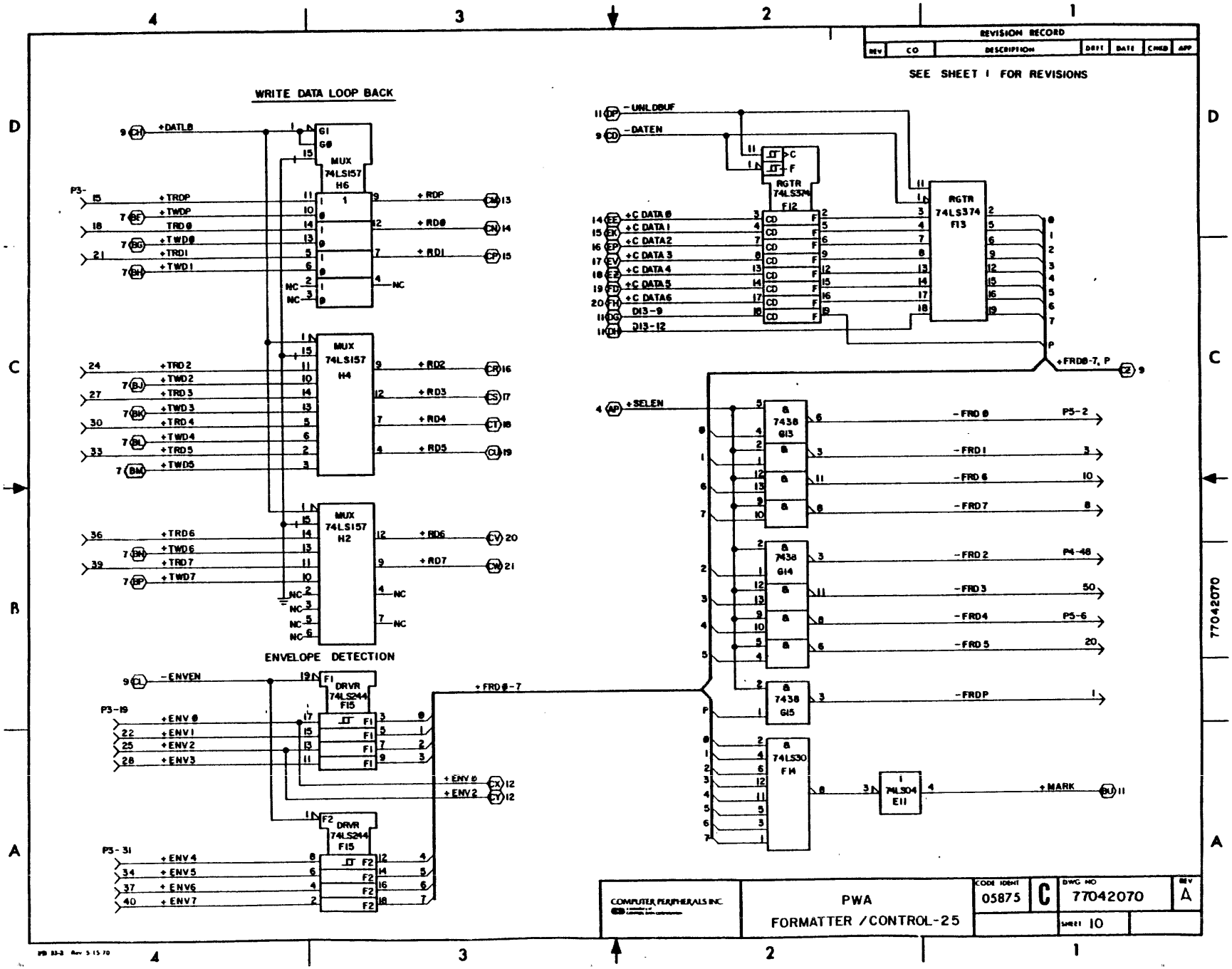
REVISION RECORD
REV
CO
DESCRIPTION
DRFT
DATE
CHKD
APP
SEE SHEET 1 FOR REVISIONS
WRITE DATA LOOP BACK
ENVELOPE DETECTION
MUX 74LS157 H6
MUX 74LS157 H4
MUX 74LS157 H2
DRVR 74LS244 F15
DRVR 74LS244 F15
RGTR 74LS374 F12
RGTR 74LS374 F13
7438 G13
7438 G14
7438 G15
74LS30 F14
74LS04 E11
+DATL8
+TROP
+TWDP
TRD8
+TWD8
+TRD1
+TWD1
+TRD2
+TWD2
+TRD3
+TWD3
+TRD4
+TWD4
+TRD5
+TWD5
+TRD6
+TWD6
+TRD7
+TWD7
+RDP
+RD8
+RD1
+RD2
+RD3
+RD4
+RD5
+RD6
+RD7
NC
-ENVEN
+ENV 8
+ENV1
+ENV2
+ENV3
+ENV4
+ENV5
+ENV6
+ENV7
+FRD8-7
-UNLDBUF
-DATEN
+C DATA 8
+C DATA 1
+C DATA2
+C DATA 3
+C DATA 4
+C DATA 5
+C DATA6
D13-9
D13-12
+FRD8-7, P
+SELEN
-FRD 8
-FRD 1
-FRD 6
-FRD7
-FRD 2
-FRD 3
-FRD 4
-FRD 5
-FRDP
+MARK
P5-2
3
10
8
P4-48
50
P5-6
20
1
COMPUTER PERIPHERALS INC.
PWA
FORMATTER /CONTROL-25
CODE IDENT
05875
C
DWG NO
77042070
REV
A
SHEET 10

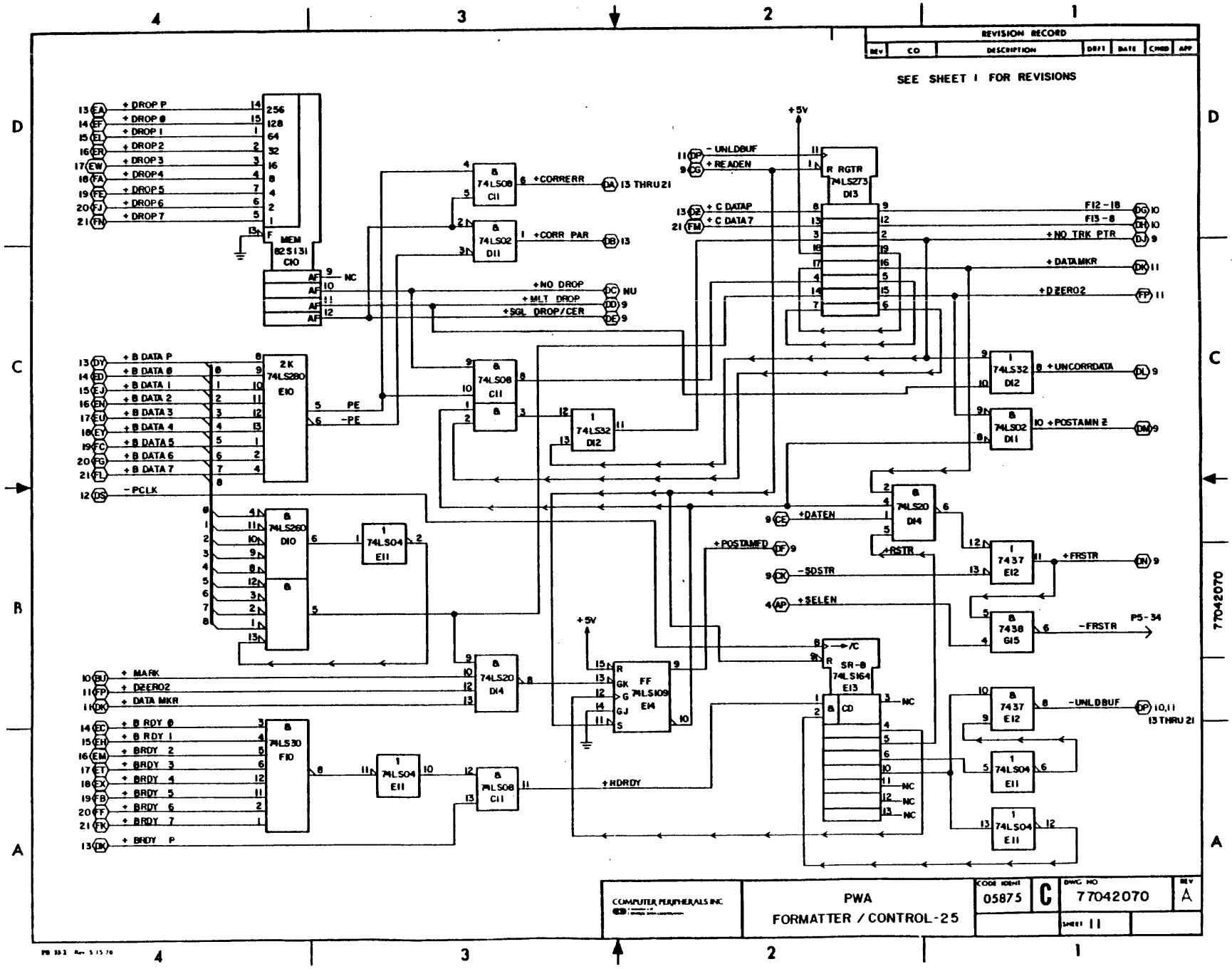
REVISION RECORD
REV | CO | DESCRIPTION | DRFT | DATE | CHKD | APP
SEE SHEET 1 FOR REVISIONS
+DROP P
+DROP 0
+DROP 1
+DROP 2
+DROP 3
+DROP 4
+DROP 5
+DROP 6
+DROP 7
MEM 82S131 C10
+NO DROP
+MLT DROP
+SGL DROP/CER
+B DATA P
+B DATA 0
+B DATA 1
+B DATA 2
+B DATA 3
+B DATA 4
+B DATA 5
+B DATA 6
+B DATA 7
2K 74LS280 E10
PE
-PE
-PCLK
+MARK
+DZERO2
+DATA MKR
+B RDY 0
+B RDY 1
+BRDY 2
+BRDY 3
+BRDY 4
+BRDY 5
+BRDY 6
+BRDY 7
+BRDY P
74LS30 F10
+CORRERR
+CORR PAR
+5V
-UNLDBUF
+READEN
R RGTR 74LS273 D13
+C DATAP
+C DATA7
F12-18
F13-8
+NO TRK PTR
+DATAMKR
+DZERO2
+UNCORRDATA
+POSTAMBLE
+DATEN
+RSTR
+POSTAMED
-SDSTR
+SELEN
+FRSTR
-FRSTR
P5-34
/C
SR-8 74LS164 E13
CD
FF 74LS109 E14
+RDRDY
-UNLDBUF
13 THRU 21
COMPUTER PERIPHERALS INC
PWA
FORMATTER / CONTROL-25
CODE IDENT 05875
C
DWG NO 77042070
REV A
SHEET 11
77042070

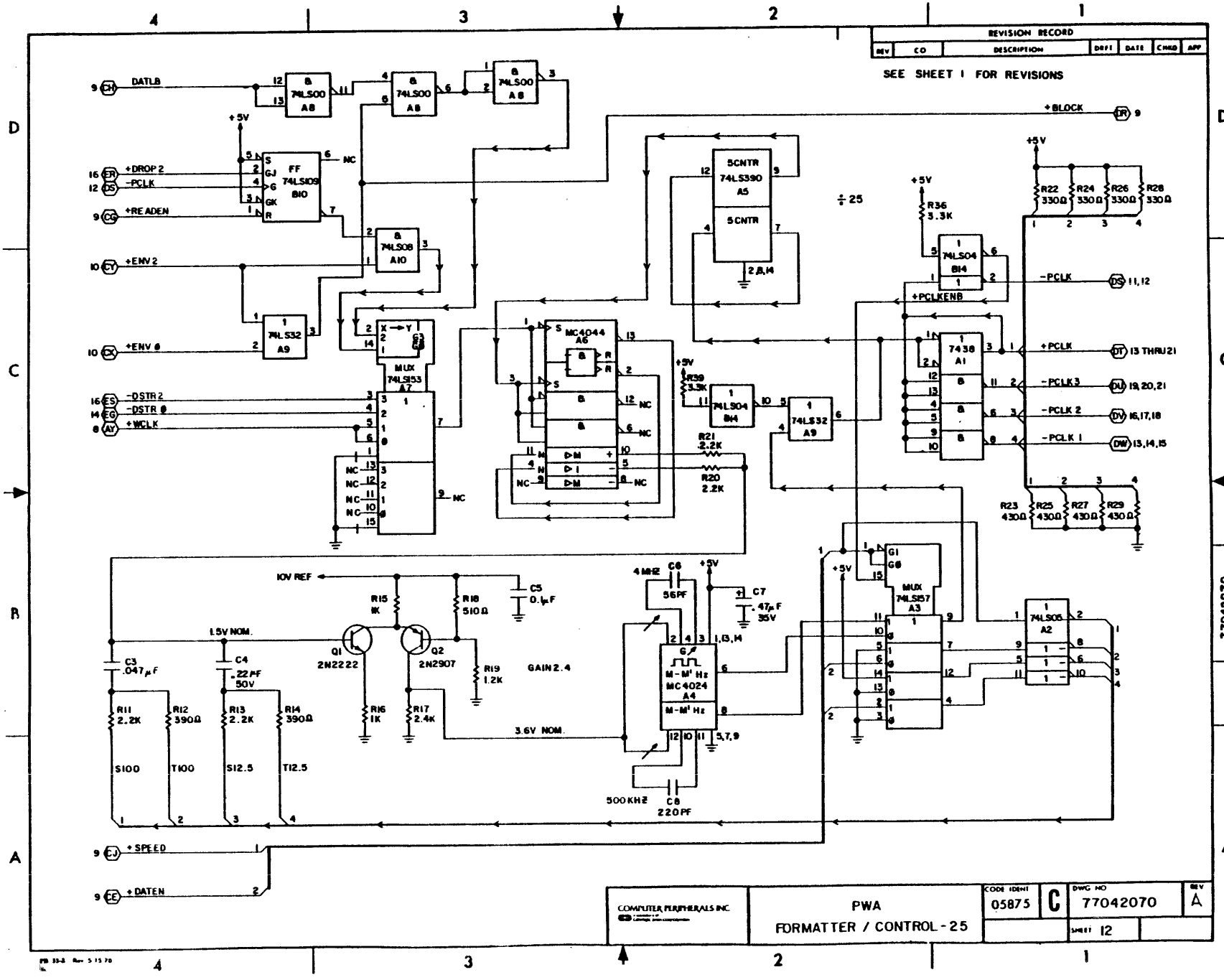
REVISION RECORD
REV | CO | DESCRIPTION | DRFT | DATE | CHKD | APP
SEE SHEET 1 FOR REVISIONS
DATLB
+DROP 2
-PCLK
+READEN
+ENV 2
+ENV 0
-DSTR 2
-DSTR 0
+WCLK
+BLOCK
÷25
+PCLKENB
-PCLK
+PCLK
-PCLK 3
-PCLK 2
-PCLK 1
10V REF
5V NOM.
3.6V NOM.
GAIN 2.4
4 MHz
500 KHz
+SPEED
+DATEN
COMPUTER PERIPHERALS INC.
PWA
FORMATTER / CONTROL - 25
CODE IDENT 05875
C
DWG NO 77042070
REV A
SHEET 12

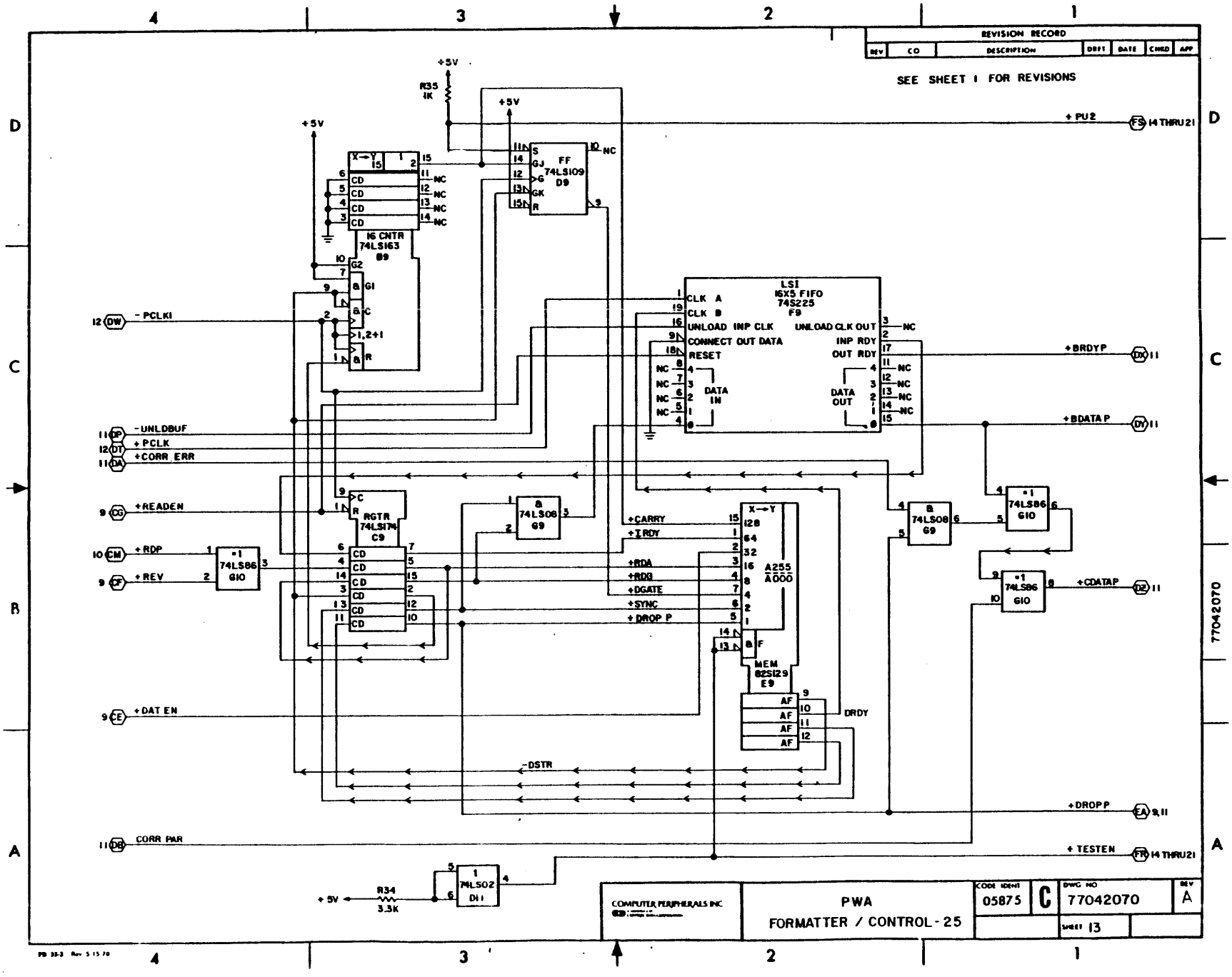
REVISION RECORD
REV
CO
DESCRIPTION
DRFT
DATE
CHKD
APP
SEE SHEET 1 FOR REVISIONS
+5V
R35
1K
+PU2
FS 14 THRU 21
X→Y
15
1
2
CD
NC
FF
74LS109
D9
16 CNTR
74LS163
B9
G2
G1
C
1,2+1
R
-PCLK1
12 DW
LSI
16X5 FIFO
74S225
F9
CLK A
CLK B
UNLOAD INP CLK
CONNECT OUT DATA
RESET
UNLOAD CLK OUT
INP RDY
OUT RDY
DATA IN
DATA OUT
+BRDYP
DX 11
-UNLDBUF
+PCLK
+CORR ERR
11 DP
12 DT
11 DA
+BDATA P
DY 11
+READEN
9 CC
RGTR
74LS174
C9
&
74LS08
G9
=1
74LS86
G10
+RDP
10 CM
+REV
9 CF
+CARRY
+IRDY
+RDA
+RDB
+DGATE
+SYNC
+DROP P
A255
A000
MEM
82S129
E9
AF
DRDY
+CDATAP
DZ 11
+DAT EN
9 CE
-DSTR
+DROPP
EA 9,11
CORR PAR
11 DB
+TESTEN
FR 14 THRU 21
R34
3.3K
1
74LS02
D11
COMPUTER PERIPHERALS INC
PWA
FORMATTER / CONTROL-25
CODE IDENT
05875
C
DWG NO
77042070
REV
A
SHEET 13

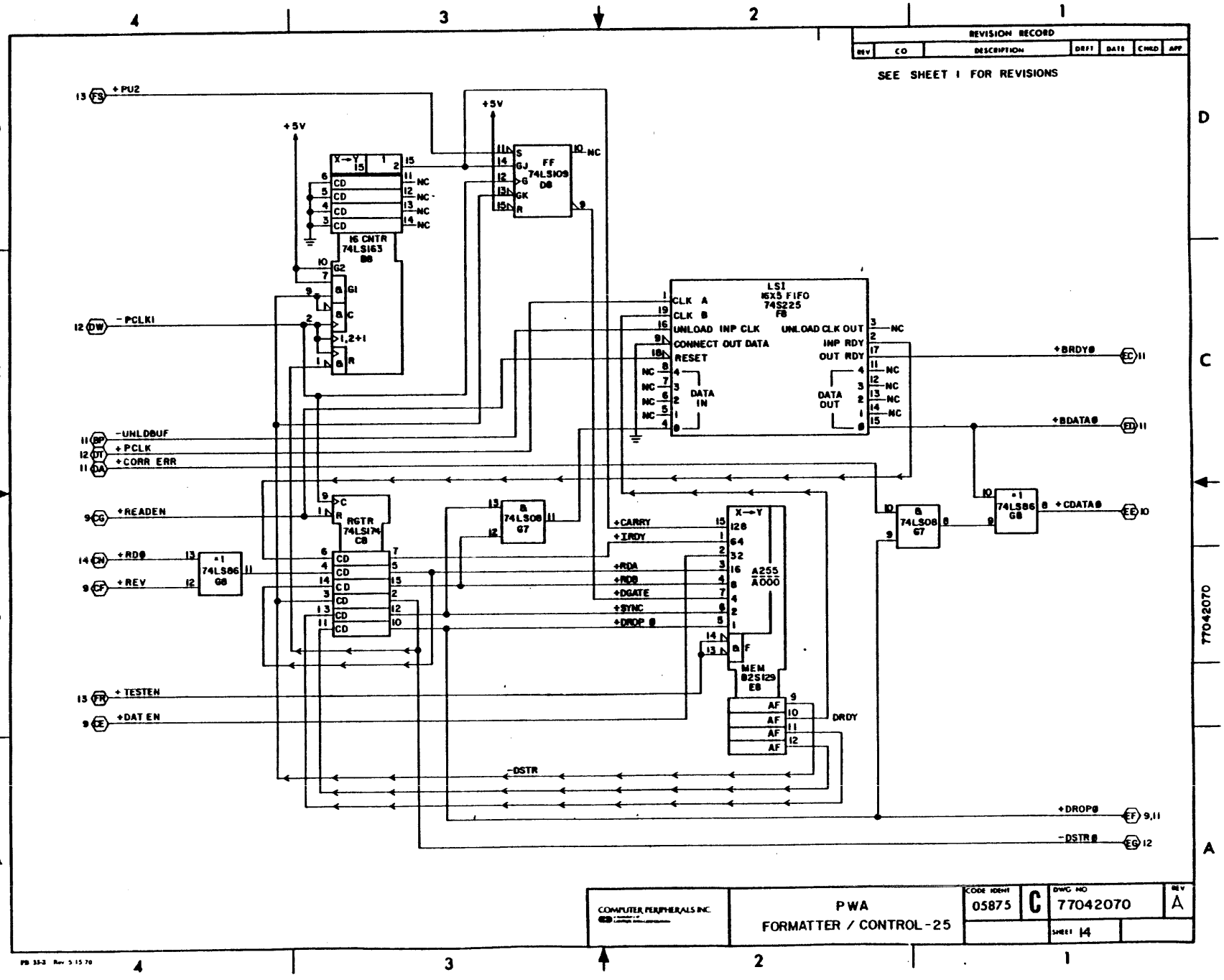
REVISION RECORD
REV
CO
DESCRIPTION
DRFT
DATE
CHKD
APP
SEE SHEET 1 FOR REVISIONS
+PU2
+5V
-PCLKI
-UNLDBUF
+PCLK
+CORR ERR
+READEN
+RD@
+REV
+TESTEN
+DAT EN
16 CNTR 74LS163 B8
RGTR 74LS174 C8
FF 74LS109 D8
LSI 16X5 FIFO 74S225 F8
CLK A
CLK B
UNLOAD INP CLK
CONNECT OUT DATA
RESET
DATA IN
UNLOAD CLK OUT
INP RDY
OUT RDY
DATA OUT
+BRDY@
+BDATA@
+CDATA@
+CARRY
+IRDY
+RDA
+RDB
+DGATE
+SYNC
+DROP @
A255 A000
MEM 825129 E8
DRDY
-DSTR
+DROP@
-DSTR@
COMPUTER PERIPHERALS INC.
PWA
FORMATTER / CONTROL-25
CODE IDENT
05875
C
DWG NO
77042070
REV
A
SHEET 14

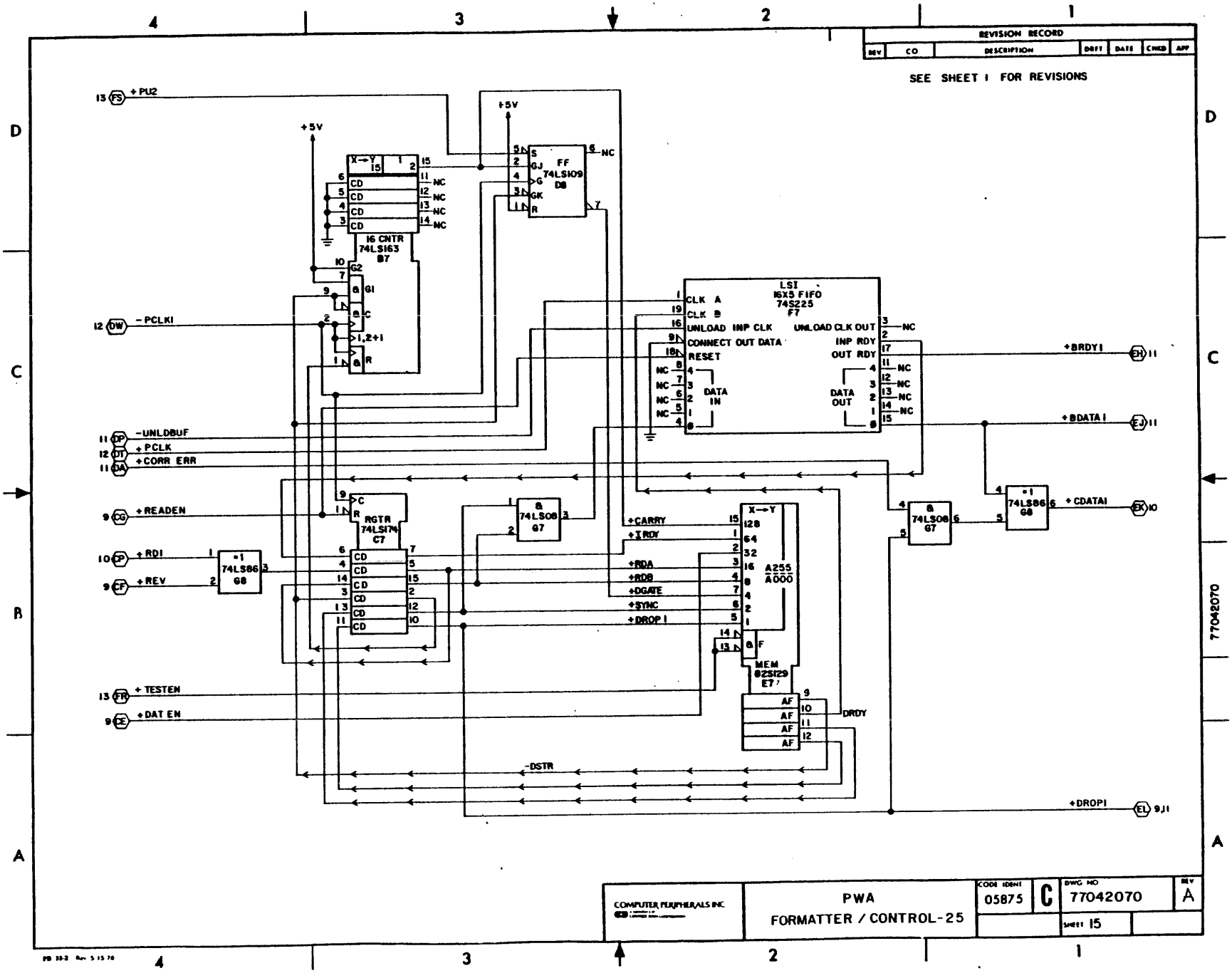
REVISION RECORD
REV CO DESCRIPTION DRFT DATE CHKD APP
SEE SHEET 1 FOR REVISIONS
+PU2
+5V
16 CNTR 74LS163 B7
74LS109 D8
LSI 16X5 FIFO 74S225 F7
-PCLK1
-UNLDBUF
+PCLK
+CORR ERR
+READEN
RGTR 74LS174 C7
+RDI
+REV
74LS86 G8
74LS08 G7
+CARRY
+IRDY
+RDA
+RDB
+DGATE
+SYNC
+DROP1
A255 A000
MEM 825129 E7
+TESTEN
+DAT EN
DRDY
-DSTR
+BRDY1
+BDATA1
+CDATA1
+DROP1
COMPUTER PERIPHERALS INC.
PWA
FORMATTER / CONTROL-25
CODE IDENT 05875
C
DWG NO 77042070
REV A
SHEET 15

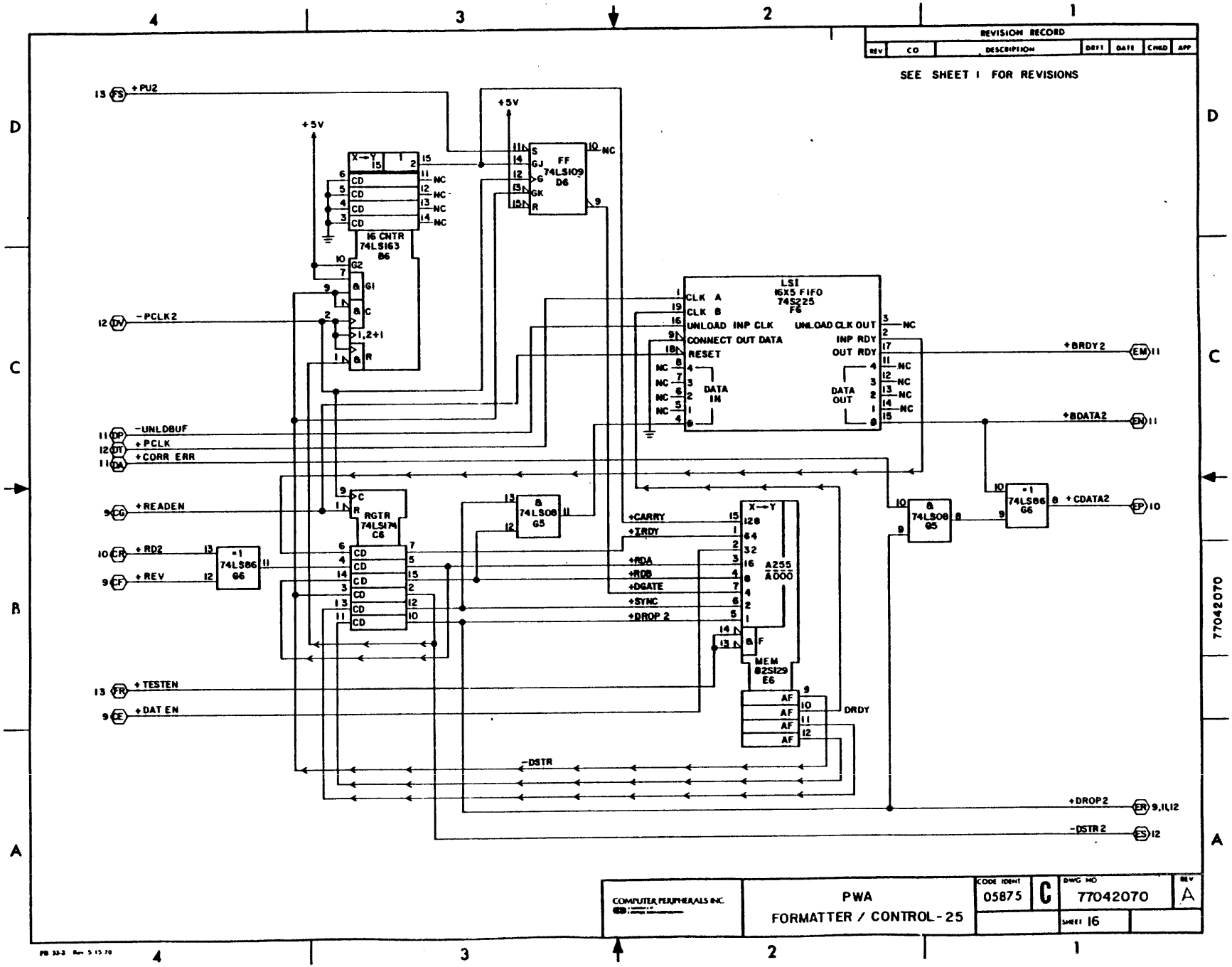
REVISION RECORD
REV CO DESCRIPTION DRFT DATE CHKD APP
SEE SHEET 1 FOR REVISIONS
+PU2
+5V
-PCLK2
16 CNTR 74LS163 B6
FF 74LS109 D6
LSI 16X5 FIFO 74S225 F6
CLK A
CLK B
UNLOAD INP CLK
CONNECT OUT DATA
RESET
DATA IN
UNLOAD CLK OUT
INP RDY
OUT RDY
DATA OUT
+BRDY2
+BDATA2
-UNLDBUF
+PCLK
+CORR ERR
+READEN
RGTR 74LS174 C6
+RD2
+REV
=1 74LS86 G6
& 74LS08 G5
+CARRY
+IRDY
+RDA
+RDB
+DGATE
+SYNC
+DROP 2
A255 A000
MEM 82S129 E6
DRDY
+TESTEN
+DAT EN
-DSTR
+CDATA2
+DROP2
-DSTR2
COMPUTER PERIPHERALS INC.
PWA
FORMATTER / CONTROL-25
CODE IDENT 05875
C
DWG NO 77042070
REV A
SHEET 16

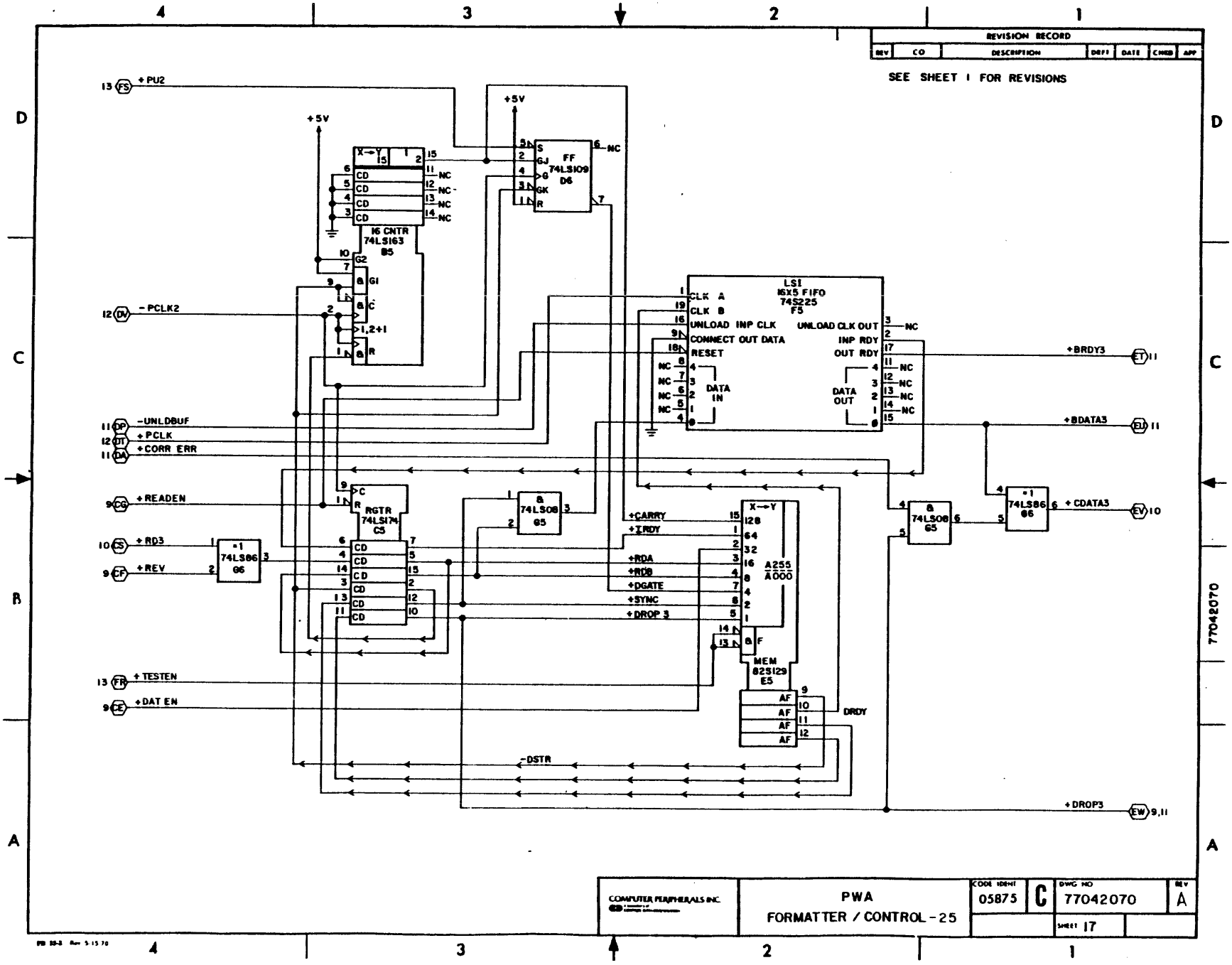
REVISION RECORD
REV
CO
DESCRIPTION
DRFT
DATE
CHKD
APP
SEE SHEET 1 FOR REVISIONS
+PU2
+5V
-PCLK2
-UNLDBUF
+PCLK
+CORR ERR
+READEN
+RD3
+REV
+TESTEN
+DAT EN
16 CNTR 74LS163 B5
FF 74LS109 D6
LSI 16X5 FIFO 74S225 F5
RGTR 74LS174 C5
MEM 825129 E5
A255 A000
74LS86 G6
74LS08 G5
+CARRY
+IRDY
+RDA
+RDB
+DGATE
+SYNC
+DROP 3
DRDY
-DSTR
+BRDY3
+BDATA3
+CDATA3
+DROP3
COMPUTER PERIPHERALS INC.
PWA
FORMATTER / CONTROL - 25
CODE IDENT
05875
C
DWG NO
77042070
REV
A
SHEET 17

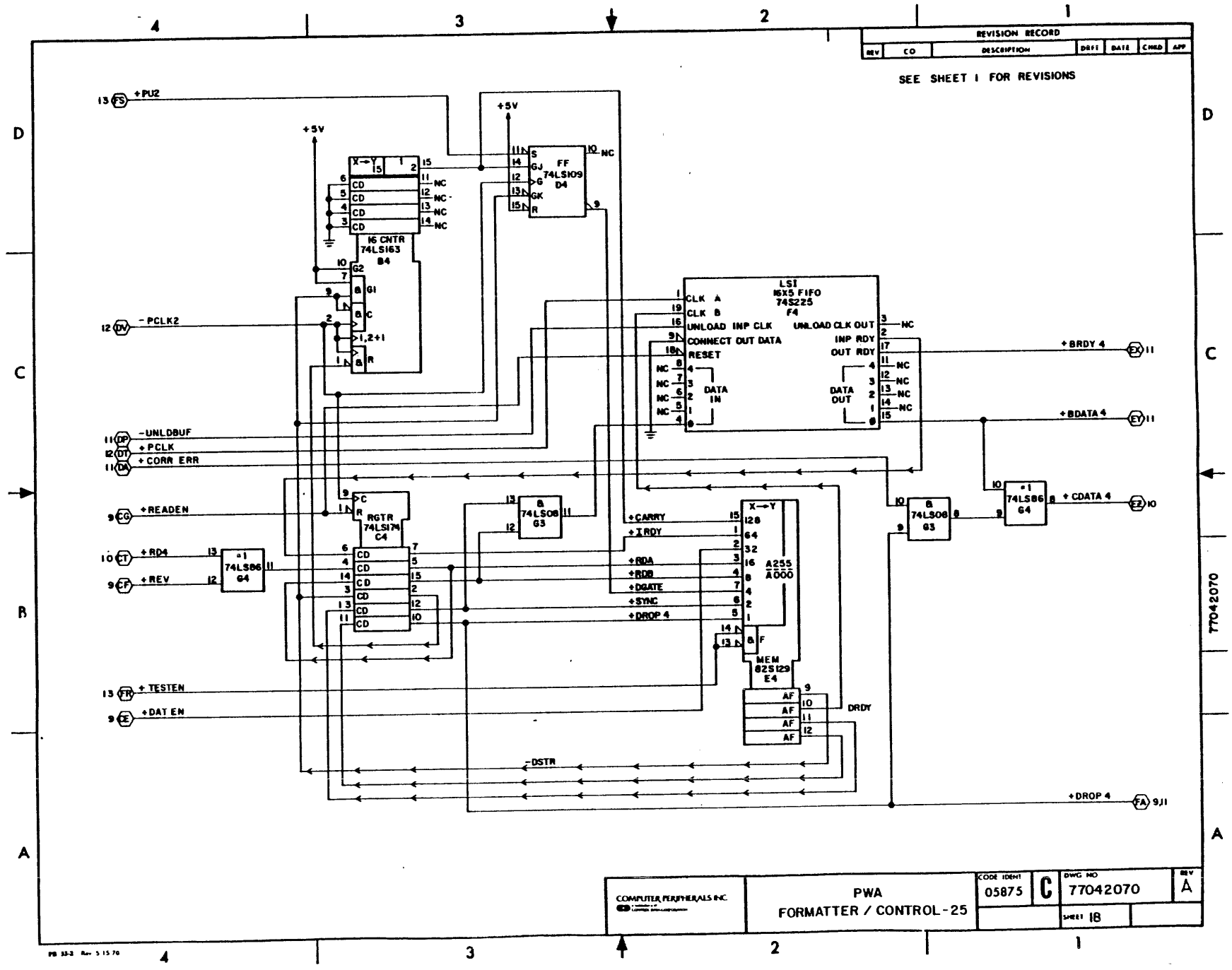
REVISION RECORD
REV
CO
DESCRIPTION
DRFT
DATE
CHKD
APP
SEE SHEET 1 FOR REVISIONS
+PU2
+5V
-PCLK2
-UNLDBUF
+PCLK
+CORR ERR
+READEN
+RD4
+REV
+TESTEN
+DAT EN
16 CNTR 74LS163 B4
RGTR 74LS174 C4
74LS86 G4
74LS08 G3
FF 74LS109 D4
LSI 16X5 FIFO 74S225 F4
A255 A000
MEM 825129 E4
+CARRY
+IRDY
+RDA
+RDB
+DGATE
+SYNC
+DROP 4
DRDY
-DSTR
+BRDY 4
+BDATA 4
+CDATA 4
+DROP 4
COMPUTER PERIPHERALS INC.
PWA
FORMATTER / CONTROL-25
CODE IDENT
05875
C
DWG NO
77042070
REV
A
SHEET 18
77042070

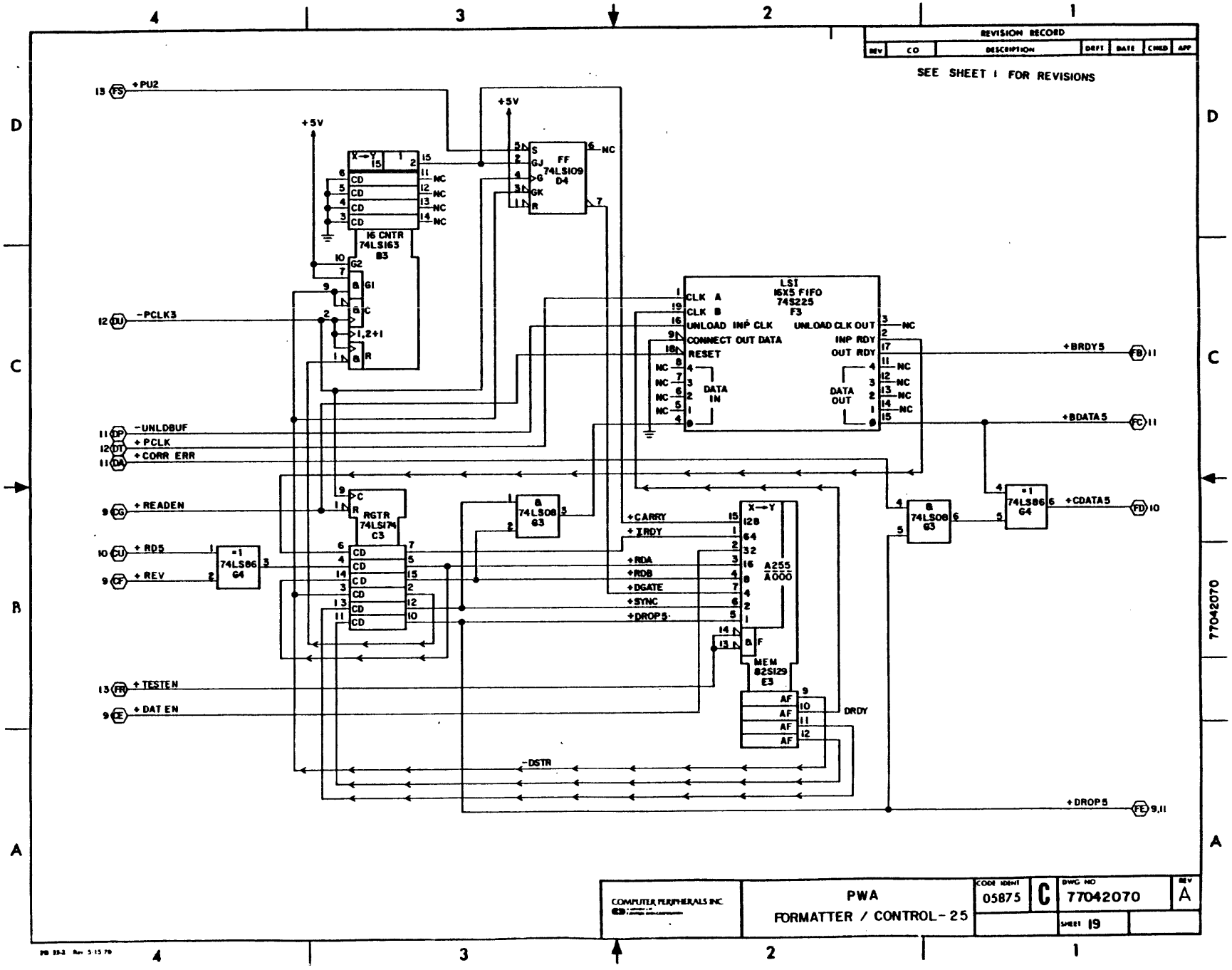
REVISION RECORD
REV CO DESCRIPTION DRFT DATE CHKD APP
SEE SHEET 1 FOR REVISIONS
+PU2
+5V
16 CNTR 74LS163 B3
FF 74LS109 D4
-PCLK3
LSI 16X5 FIFO 74S225 F3
CLK A
CLK B
UNLOAD INP CLK
CONNECT OUT DATA
RESET
UNLOAD CLK OUT
INP RDY
OUT RDY
DATA IN
DATA OUT
+BRDY5
+BDATA5
-UNLDBUF
+PCLK
+CORR ERR
+READEN
RGTR 74LSI74 C3
74LS08 G3
74LS86 G4
+RD5
+REV
+CARRY
+IRDY
+RDA
+RDB
+DGATE
+SYNC
+DROP5
A255 A000
MEM 82S129 E3
DRDY
+TESTEN
+DAT EN
-DSTR
+CDATA5
+DROP5
COMPUTER PERIPHERALS INC.
PWA
FORMATTER / CONTROL-25
CODE IDENT 05875
C
DWG NO 77042070
REV A
SHEET 19
77042070

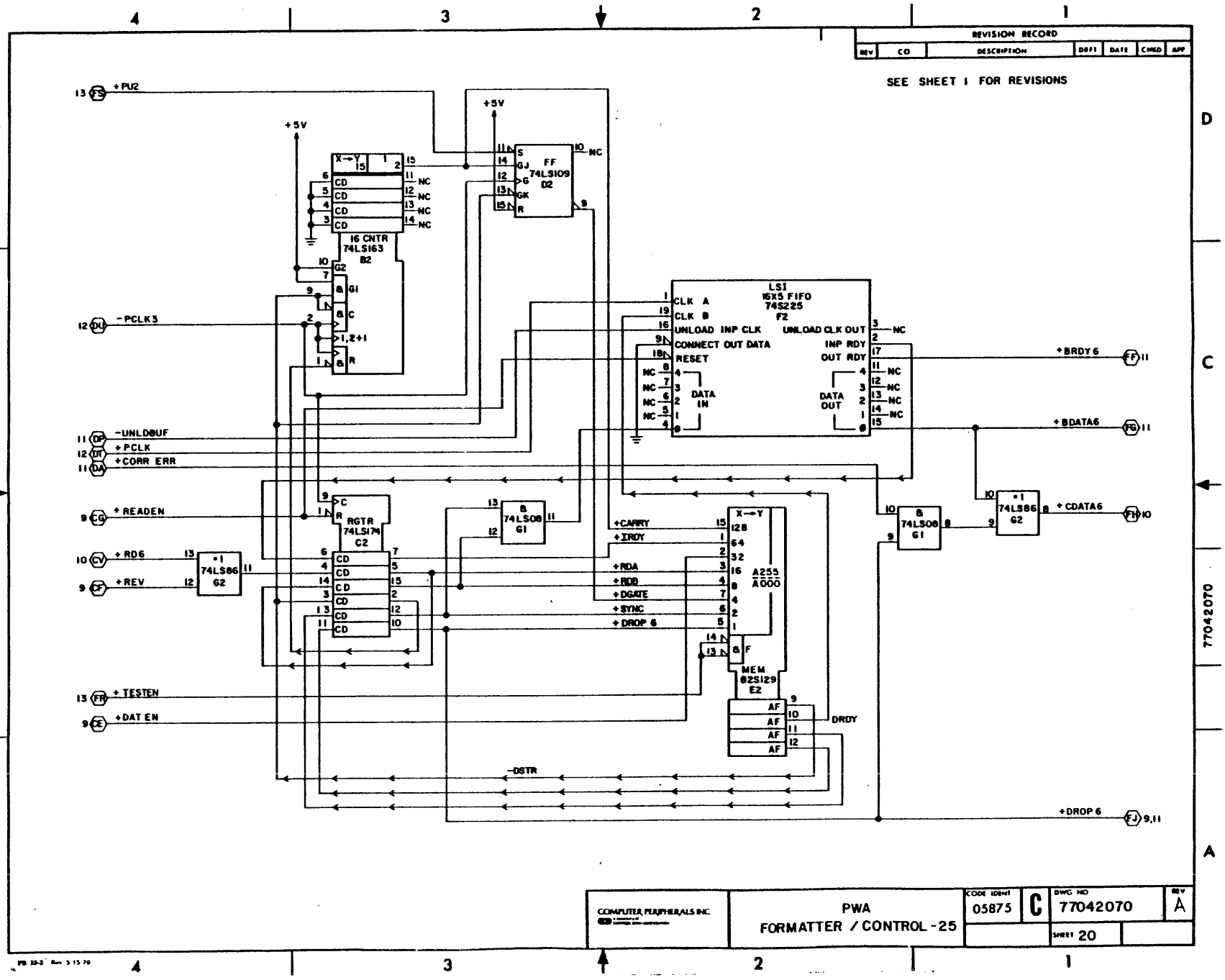
REVISION RECORD
REV
CO
DESCRIPTION
DRFT
DATE
CHKD
APP
SEE SHEET 1 FOR REVISIONS
+PU2
+5V
-PCLK3
-UNLDBUF
+PCLK
+CORR ERR
+READEN
+RD6
+REV
+TESTEN
+DAT EN
16 CNTR 74LS163 B2
FF 74LS109 D2
RGTR 74LSI74 C2
LSI 16X5 FIFO 74S225 F2
MEM 82S129 E2
A255 A000
74LS86 G2
74LS08 G1
+CARRY
+IRDY
+RDA
+RDB
+DGATE
+SYNC
+DROP 6
DRDY
-DSTR
+BRDY 6
+BDATA6
+CDATA6
+DROP 6
COMPUTER PERIPHERALS INC.
PWA
FORMATTER / CONTROL-25
CODE IDENT 05875
C
DWG NO 77042070
REV A
SHEET 20
77042070

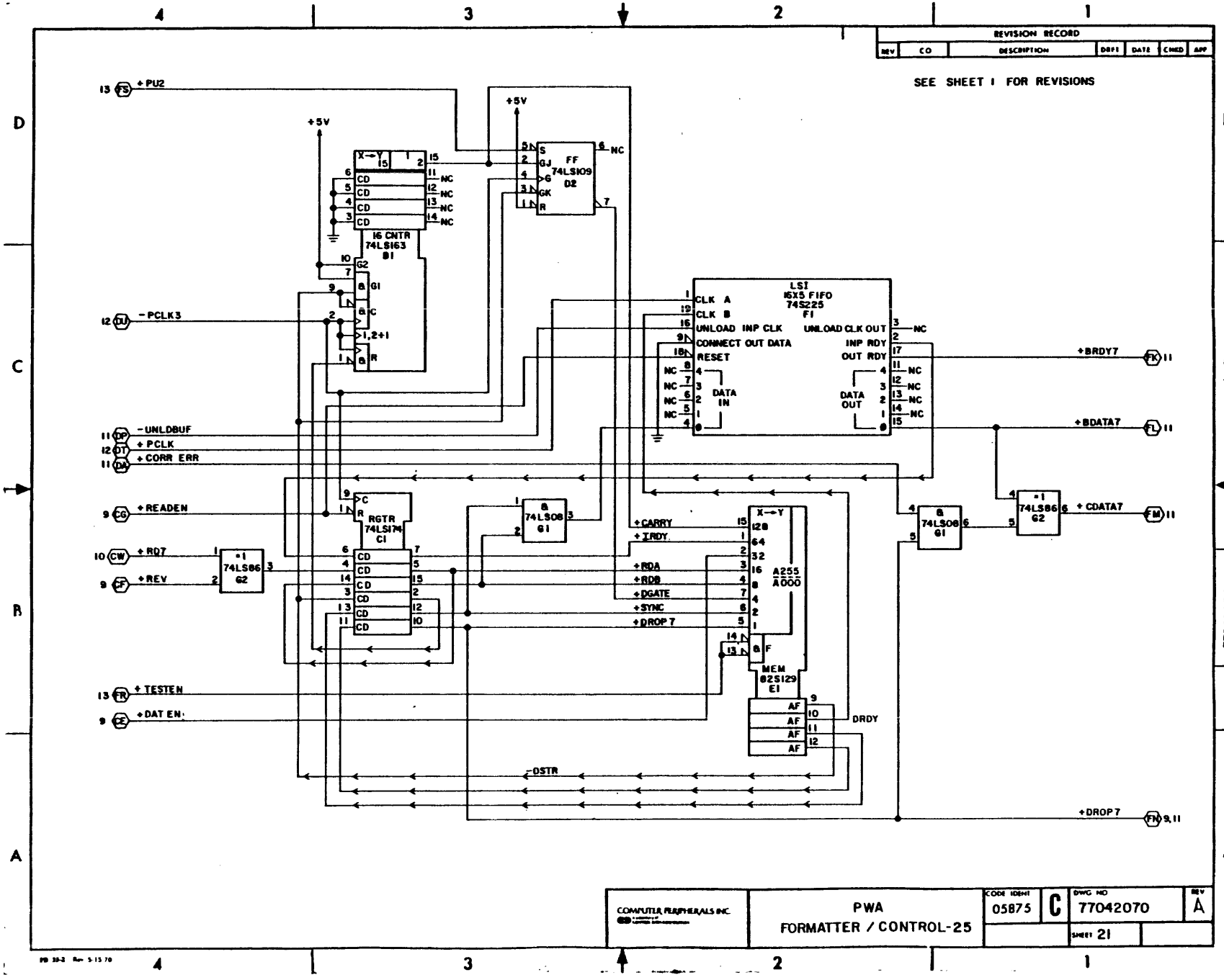
REVISION RECORD
REV | CO | DESCRIPTION | DRFT | DATE | CHKD | APP
SEE SHEET 1 FOR REVISIONS
+PU2
+5V
-PCLK3
16 CNTR 74LS163 B1
FF 74LS109 D2
LSI 16X5 FIFO 74S225 F1
CLK A
CLK B
UNLOAD INP CLK
CONNECT OUT DATA
RESET
DATA IN
UNLOAD CLK OUT
INP RDY
OUT RDY
DATA OUT
+BRDY7
+BDATA7
-UNLDBUF
+PCLK
+CORR ERR
+READEN
RGTR 74LS174 C1
+RQT
+REV
74LS86 G2
74LS08 G1
+CARRY
+IRDY
+RDA
+RDB
+DGATE
+SYNC
+DROP 7
A255 A000
MEM 82S129 E1
+TESTEN
+DATEN
DRDY
-DSTR
+CDATA7
+DROP 7
COMPUTER PERIPHERALS INC.
PWA
FORMATTER / CONTROL-25
CODE IDENT 05875
C
DWG NO 77042070
REV A
SHEET 21

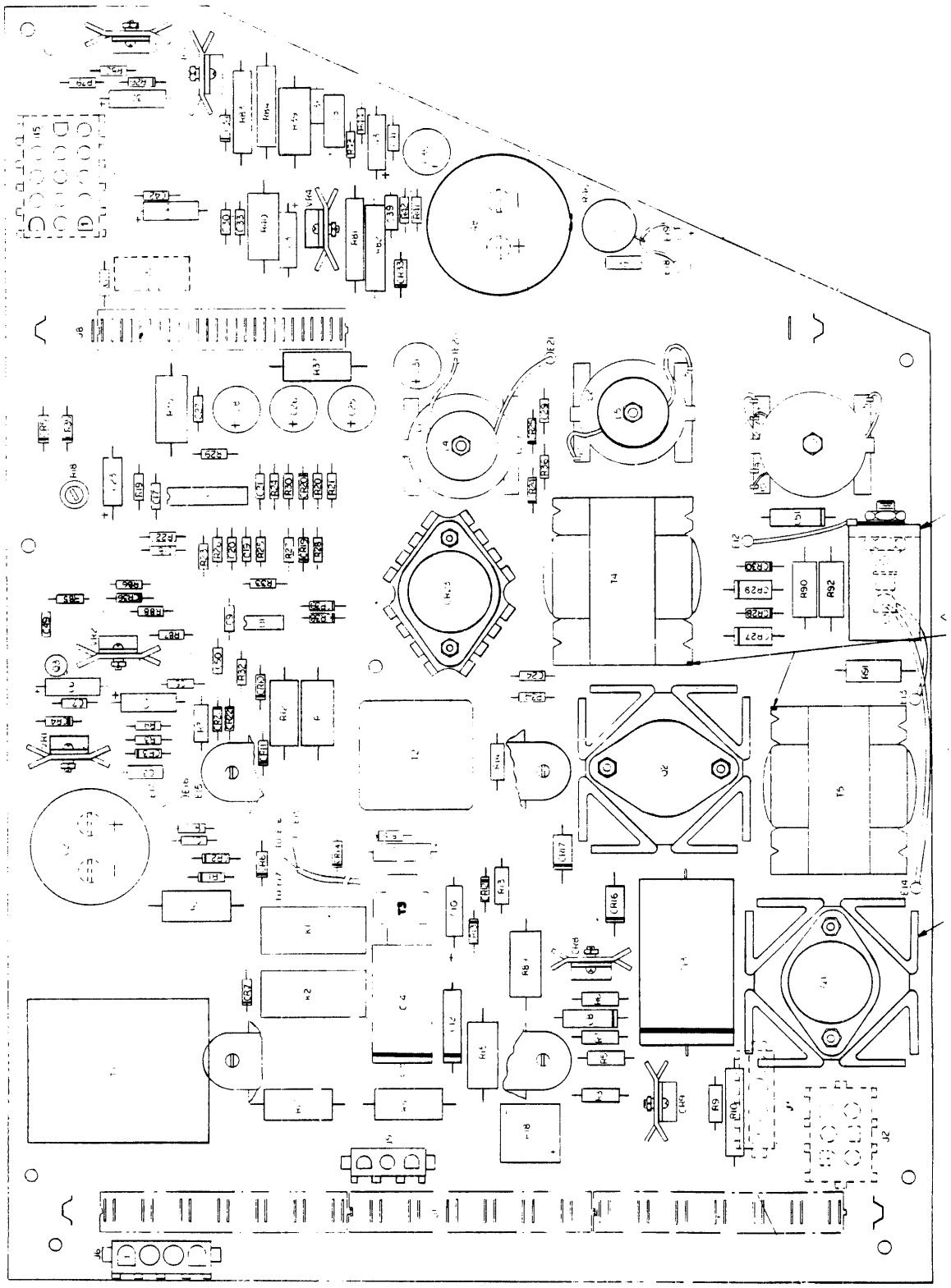

POWER SUPPLY PWA P/N 77040710

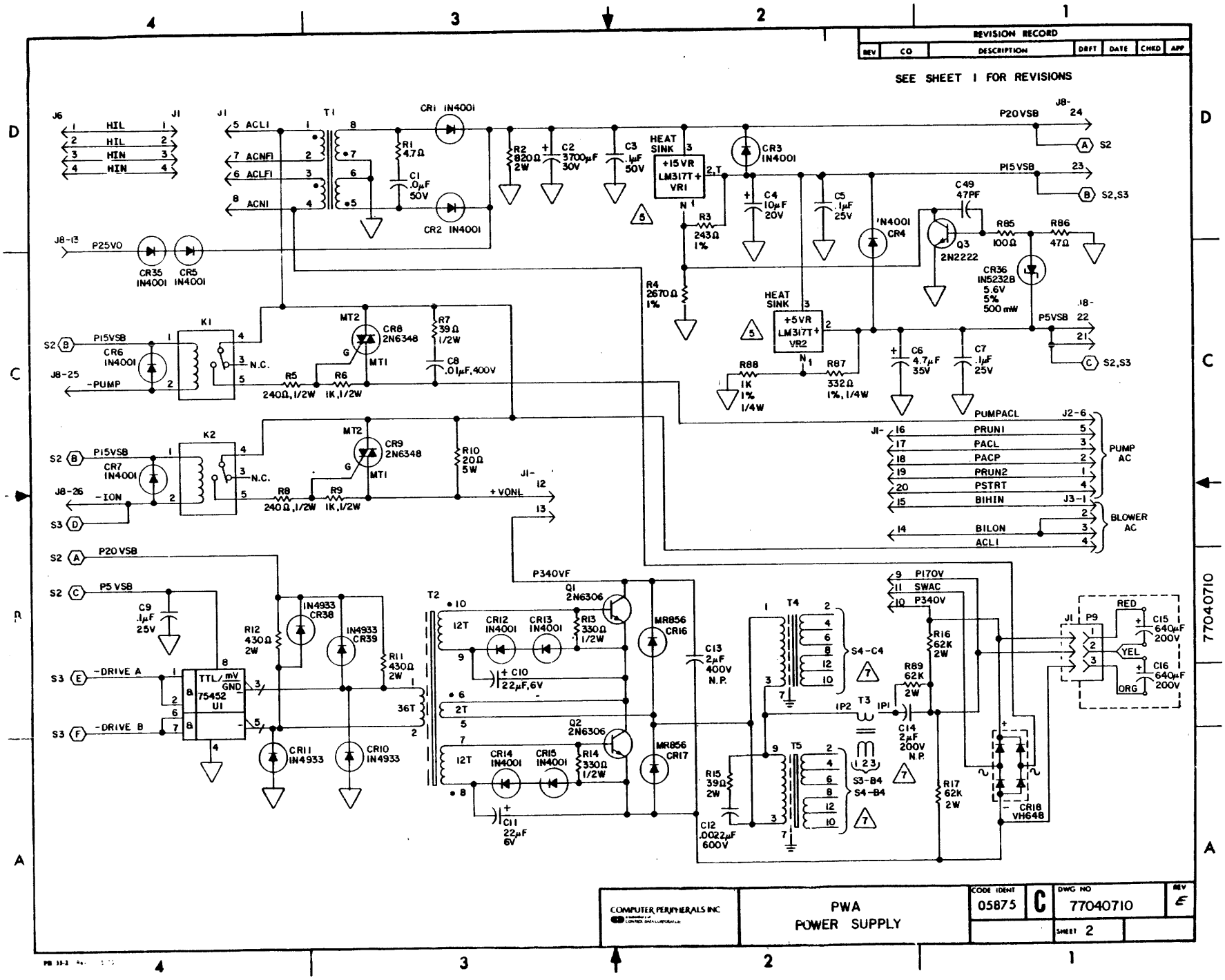
REVISION RECORD
REV
CO
DESCRIPTION
DRFT
DATE
CHKD
APP
SEE SHEET 1 FOR REVISIONS
J6
J1
HIL
HIN
ACL1
ACNF1
ACLF1
ACN1
T1
CR1 1N4001
CR2 1N4001
R1 4.7Ω
C1 .0μF 50V
R2 820Ω 2W
C2 3700μF 30V
C3 .1μF 50V
HEAT SINK
+15VR LM317T VR1
CR3 1N4001
C4 10μF 20V
C5 .1μF 25V
R3 243Ω 1%
R4 2670Ω 1%
1N4001 CR4
C49 47PF
Q3 2N2222
R85 100Ω
R86 47Ω
CR36 1N5232B 5.6V 5% 500 mW
P20VSB
P15VSB
P5VSB
J8-24
J8-23
J8-22
S2
S2,S3
J8-13
P25VO
CR35 1N4001
CR5 1N4001
K1
MT2
CR8 2N6348
MT1
R7 39Ω 1/2W
C8 .01μF,400V
R5 240Ω,1/2W
R6 1K,1/2W
CR6 1N4001
J8-25
-PUMP
N.C.
HEAT SINK
+5VR LM317T VR2
R88 1K 1% 1/4W
R87 332Ω 1%,1/4W
C6 4.7μF 35V
C7 .1μF 25V
PUMPACL
PRUN1
PACL
PACP
PRUN2
PSTRT
BIHIN
BILON
ACL1
J2-6
J3-1
PUMP AC
BLOWER AC
K2
CR9 2N6348
R10 20Ω 5W
R8 240Ω,1/2W
R9 1K,1/2W
CR7 1N4001
J8-26
-ION
+VONL
P340VF
Q1 2N6306
Q2 2N6306
R13 330Ω 1/2W
R14 330Ω 1/2W
CR12 1N4001
CR13 1N4001
CR14 1N4001
CR15 1N4001
C10 22μF,6V
C11 22μF 6V
MR856 CR16
MR856 CR17
C13 2μF 400V N.P.
T2
12T
2T
36T
C9 .1μF 25V
R12 430Ω 2W
R11 430Ω 2W
1N4933 CR38
1N4933 CR39
CR11 1N4933
CR10 1N4933
TTL/mV GND
75452 U1
-DRIVE A
-DRIVE B
T4
T5
S4-C4
S3-B4
S4-B4
R15 39Ω 2W
C12 .0022μF 600V
P170V
SWAC
P340V
R16 62K 2W
R89 62K 2W
C14 2μF 200V N.P.
R17 62K 2W
CR18 VH648
J1
P9
RED
YEL
ORG
C15 640μF 200V
C16 640μF 200V
77040710
COMPUTER PERIPHERALS INC
PWA POWER SUPPLY
CODE IDENT 05875
C
DWG NO 77040710
REV E
SHEET 2

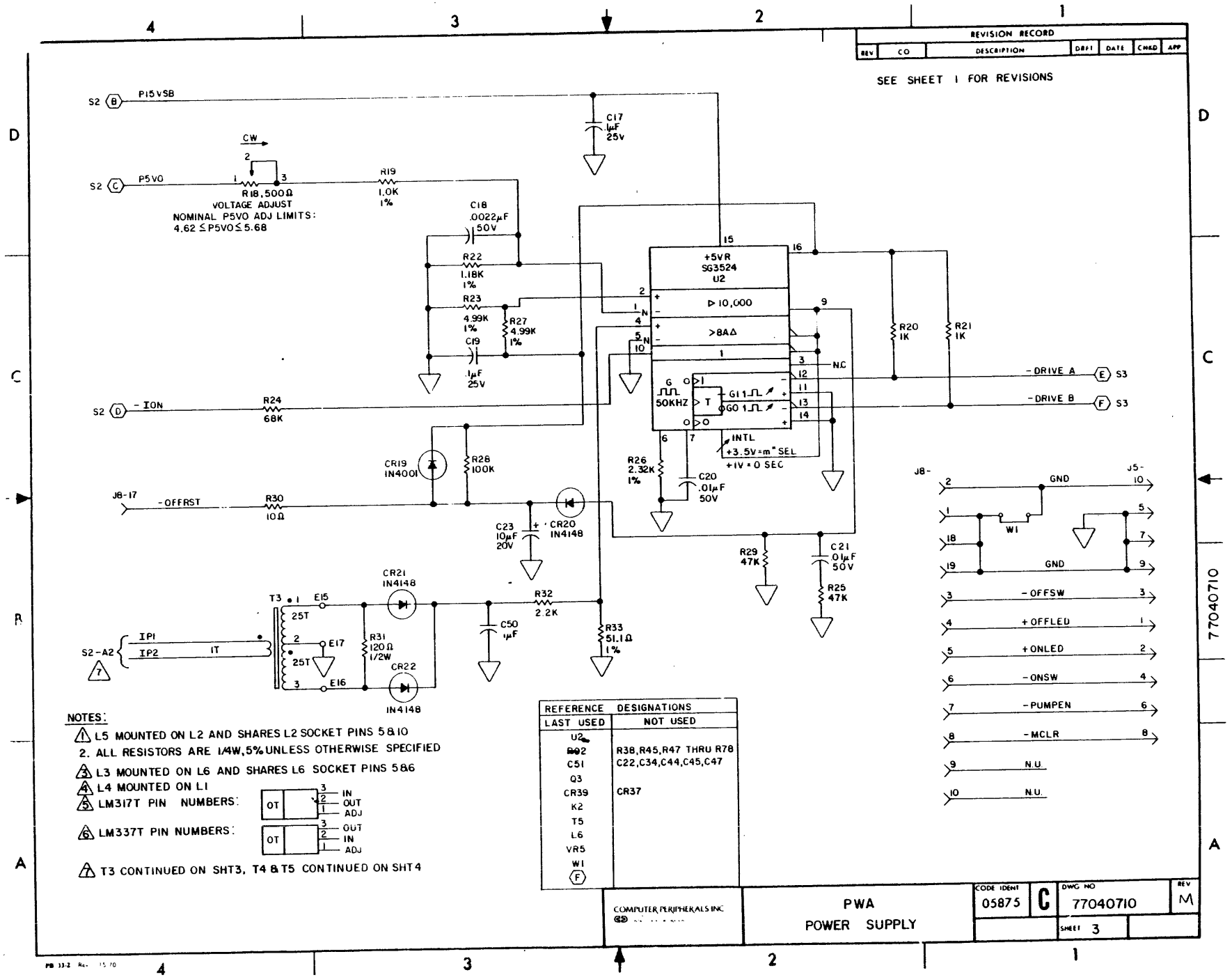
REVISION RECORD
REV CO DESCRIPTION DRFT DATE CHKD APP
SEE SHEET 1 FOR REVISIONS
S2 B P15VSB
S2 C P5VO
CW
R18, 500Ω
VOLTAGE ADJUST
NOMINAL P5VO ADJ LIMITS:
4.62 ≤ P5VO ≤ 5.68
R19 1.0K 1%
C17 .1μF 25V
C18 .0022μF 50V
R22 1.18K 1%
R23 4.99K 1%
R27 4.99K 1%
C19 .1μF 25V
+5VR SG3524 U2
▷10,000
>8AΔ
N.C
G 50KHZ
G1
G0
INTL
+3.5V=m" SEL
+1V=0 SEC
R20 1K
R21 1K
-DRIVE A E S3
-DRIVE B F S3
S2 D -ION
R24 68K
CR19 IN4001
R28 100K
J8-17 -OFFRST
R30 10Ω
C23 10μF 20V
CR20 IN4148
R26 2.32K 1%
C20 .01μF 50V
R29 47K
C21 .01μF 50V
R25 47K
CR21 IN4148
T3
E15
25T
E17
25T
E16
S2-A2
IP1
IP2
1T
R31 120Ω 1/2W
CR22 IN4148
C50 1μF
R32 2.2K
R33 51.1Ω 1%
J8-
J5-
GND
W1
GND
-OFFSW
+OFFLED
+ONLED
-ONSW
-PUMPEN
-MCLR
N.U.
N.U.
NOTES:
1. L5 MOUNTED ON L2 AND SHARES L2 SOCKET PINS 5&10
2. ALL RESISTORS ARE 1/4W, 5% UNLESS OTHERWISE SPECIFIED
3. L3 MOUNTED ON L6 AND SHARES L6 SOCKET PINS 5&6
4. L4 MOUNTED ON L1
5. LM317T PIN NUMBERS: OT 3 IN 2 OUT 1 ADJ
6. LM337T PIN NUMBERS: OT 3 OUT 2 IN 1 ADJ
7. T3 CONTINUED ON SHT3, T4 & T5 CONTINUED ON SHT4
REFERENCE DESIGNATIONS
LAST USED NOT USED
U2
R92 R38,R45,R47 THRU R78
C51 C22,C34,C44,C45,C47
Q3
CR39 CR37
K2
T5
L6
VR5
W1
F
COMPUTER PERIPHERALS INC
PWA
POWER SUPPLY
CODE IDENT 05875
C
DWG NO 77040710
REV M
SHEET 3
77040710

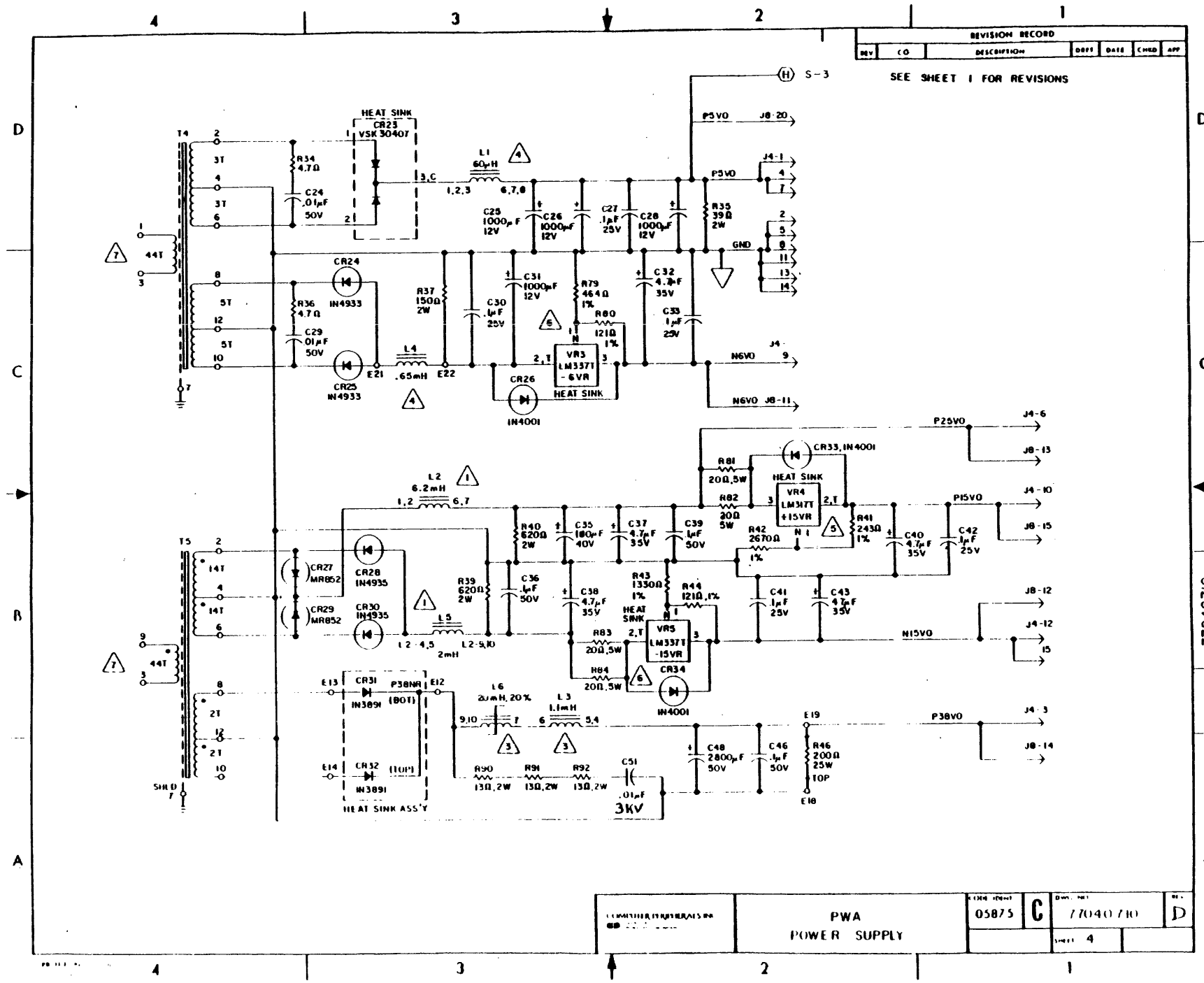
REVISION RECORD
REV
CO
DESCRIPTION
DRFT
DATE
CHKD
APP
SEE SHEET 1 FOR REVISIONS
S-3
P5VO
J8-20
J4-1
GND
N6VO
J4-9
N6VO J8-11
HEAT SINK
CR23
VSK 30407
T4
R34 4.7Ω
C24 .01μF 50V
L1 60μH
C25 1000μF 12V
C26 1000μF 12V
C27 .1μF 25V
C28 1000μF 12V
R35 39Ω 2W
R36 4.7Ω
C29 .01μF 50V
CR24 IN4933
CR25 IN4933
R37 150Ω 2W
L4 .65mH
C30 .1μF 25V
C31 1000μF 12V
R79 464Ω 1%
R80 121Ω 1%
C32 4.7μF 35V
C33 1μF 25V
VR3 LM337T -6VR
HEAT SINK
CR26 IN4001
P25VO
J4-6
J8-13
CR33, IN4001
L2 6.2mH
R81 20Ω,5W
R82 20Ω 5W
VR4 LM317T +15VR
P15VO
J4-10
J8-15
R41 243Ω 1%
R42 2670Ω 1%
C40 4.7μF 35V
C42 1μF 25V
T5
CR27 MR852
CR28 IN4935
CR29 MR852
CR30 IN4935
L5 2mH
R39 620Ω 2W
C36 .1μF 50V
C38 4.7μF 35V
R40 620Ω 2W
C35 180μF 40V
C37 4.7μF 35V
C39 1μF 50V
R43 1330Ω 1%
R44 121Ω 1%
C41 1μF 25V
C43 4.7μF 35V
J8-12
J4-12
N15VO
15
R83 20Ω,5W
R84 20Ω,5W
VR5 LM337T -15VR
CR34 IN4001
CR31 IN3891
P38NR (BOT)
CR32 IN3891 (TOP)
HEAT SINK ASS'Y
L6 2μH, 20%
L3 1.1mH
R90 13Ω,2W
R91 13Ω,2W
R92 13Ω,2W
C51 .01μF 3KV
C48 2800μF 50V
C46 1μF 50V
R46 200Ω 25W TOP
P38VO
J4-3
J8-14
SHLD
44T
14T
5T
2T
3T
77040710
PWA
POWER SUPPLY
05875
C
77040710
D
SHEET 4

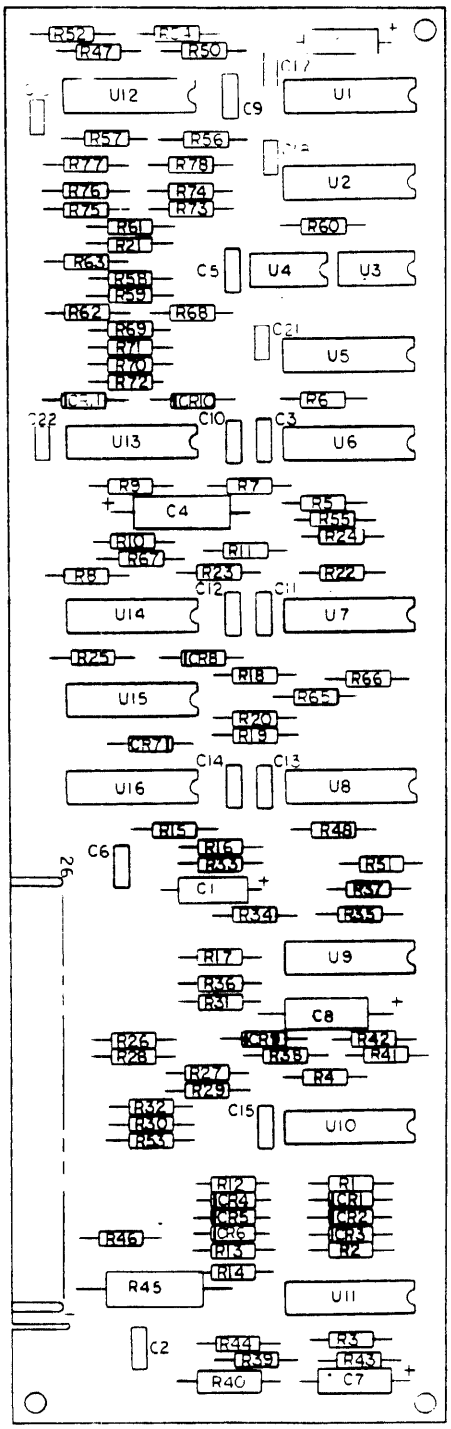

POWER SUPPLY CONTROL PWA P/N 77040460

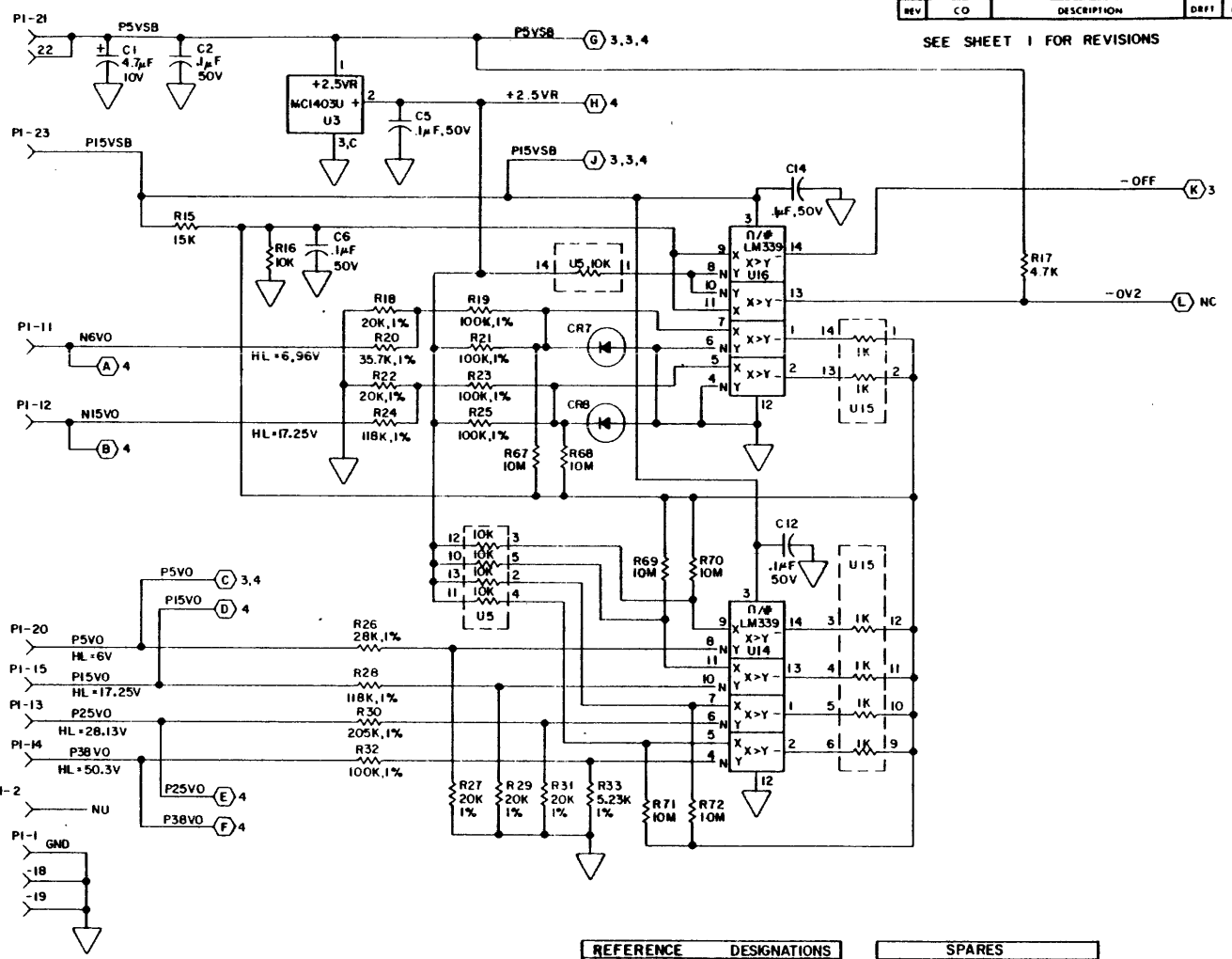

SEE SHEET 1 FOR REVISIONS

REVISION RECORD						
REV	CO	DESCRIPTION	DRFT	DATE	CHKD	APP

REFERENCE DESIGNATIONS	
LAST USED	NOT USED
U16	R49, R64
R78	
C22	
CR11	
N	

SPARES		
TYPE	LOCATION	OUTPUTS
7406	U8	6
LM339	U13	13
2N2907	U9	10,14

NOTES:
1. ALL RESISTORS ARE 1/4W, 5% UNLESS OTHERWISE SPECIFIED.
2. ALL DIODES ARE IN4148 UNLESS OTHERWISE SPECIFIED.

COMPUTER PERIPHERALS INC.	PWA POWER SUPPLY CONTROL	CODE IDENT 05875	C	DWG NO 77040460 REV A
				SHEET 2

77040460

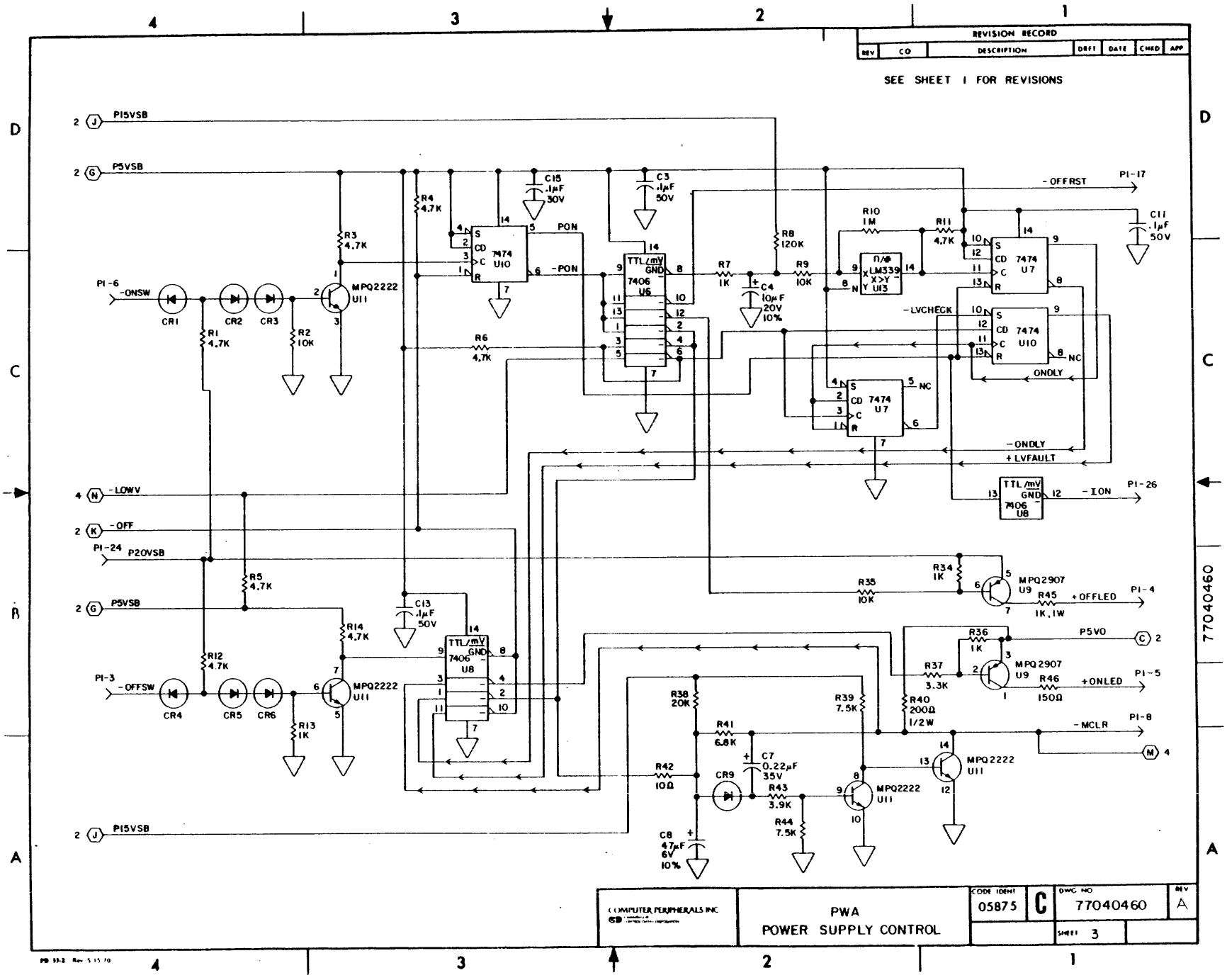
REVISION RECORD
REV
CO
DESCRIPTION
DRFT
DATE
CHKD
APP
SEE SHEET 1 FOR REVISIONS
2 (J) PI5VSB
2 (G) P5VSB
PI-6 -ONSW
PI-3 -OFFSW
CR1
CR2
CR3
CR4
CR5
CR6
R1 4.7K
R2 10K
R3 4.7K
R4 4.7K
R5 4.7K
R6 4.7K
R7 1K
R8 120K
R9 10K
R10 1M
R11 4.7K
R12 4.7K
R13 1K
R14 4.7K
R34 1K
R35 10K
R36 1K
R37 3.3K
R38 20K
R39 7.5K
R40 200Ω 1/2W
R41 6.8K
R42 10Ω
R43 3.9K
R44 7.5K
R45 1K,1W
R46 150Ω
C3 .1μF 50V
C4 10μF 20V 10%
C7 0.22μF 35V
C8 47μF 6V 10%
C11 .1μF 50V
C13 .1μF 50V
C15 .1μF 30V
MPQ2222 U11
MPQ2907 U9
7474 U10
7474 U7
7406 U6
7406 U8
LM339 U13
PON
-PON
-OFFRST
PI-17
-LVCHECK
ONDLY
NC
-ONDLY
+LVFAULT
4 (N) -LOWV
2 (K) -OFF
PI-24 P20VSB
-ION
PI-26
+OFFLED
PI-4
P5VO
2 (C)
+ONLED
PI-5
-MCLR
PI-8
4 (M)
2 (J) PI5VSB
COMPUTER PERIPHERALS INC
PWA
POWER SUPPLY CONTROL
CODE IDENT
05875
C
DWG NO
77040460
REV
A
SHEET 3

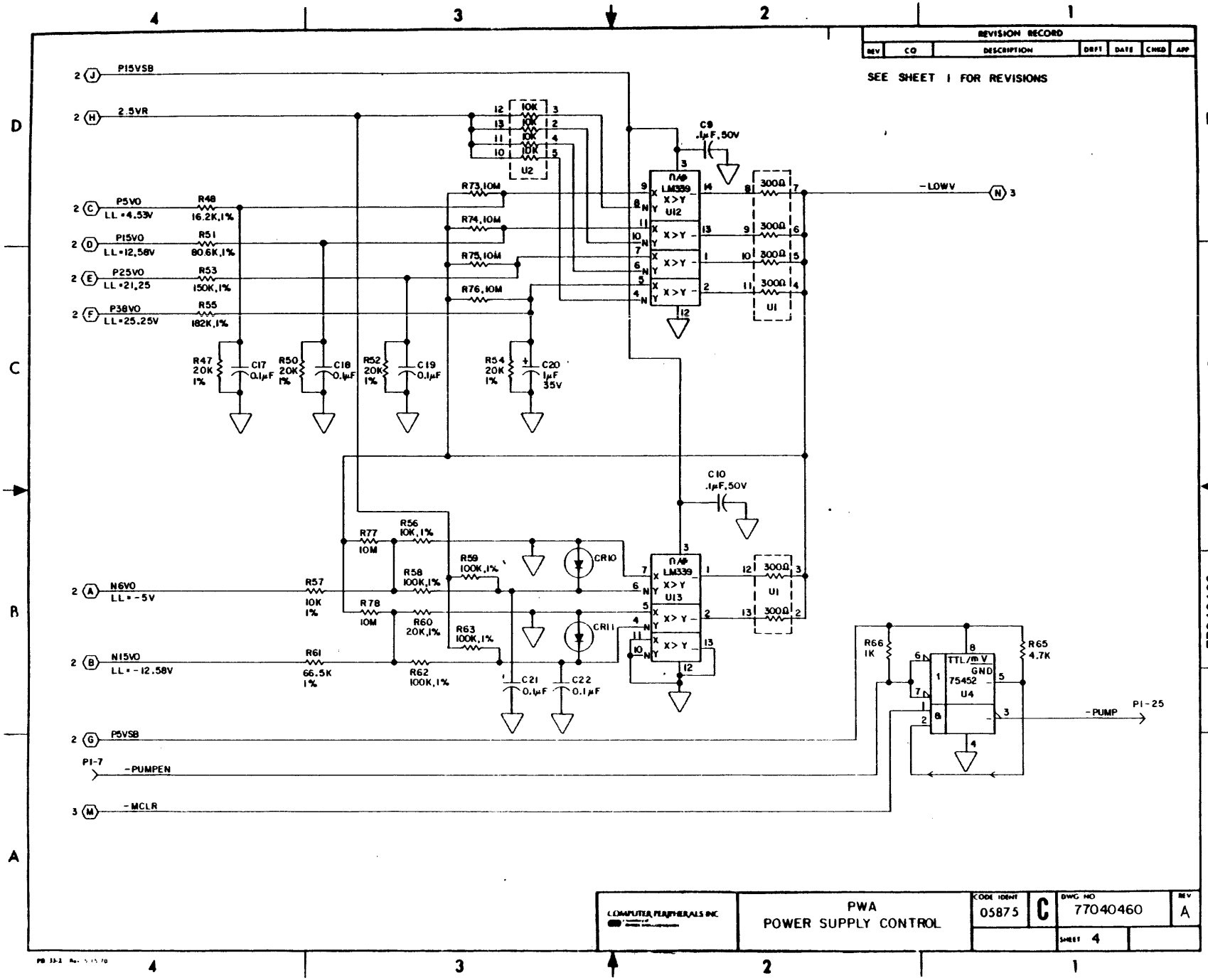
REVISION RECORD
REV | CO | DESCRIPTION | DRFT | DATE | CHKD | APP
SEE SHEET 1 FOR REVISIONS
2 J P15VSB
2 H 2.5VR
2 C P5VO LL=4.53V R48 16.2K,1%
2 D P15VO LL=12.58V R51 80.6K,1%
2 E P25VO LL=21.25 R53 150K,1%
2 F P38VO LL=25.25V R55 182K,1%
R73,10M
R74,10M
R75,10M
R76,10M
U2
C9 .1μF,50V
U12
U13
U1
300Ω
-LOWV N 3
R47 20K 1% C17 0.1μF
R50 20K 1% C18 0.1μF
R52 20K 1% C19 0.1μF
R54 20K 1% C20 1μF 35V
C10 .1μF,50V
R77 10M
R56 10K,1%
R58 100K,1%
R59 100K,1%
R60 20K,1%
R63 100K,1%
R62 100K,1%
CR10
CR11
2 A N6VO LL=-5V R57 10K 1%
R78 10M
2 B N15VO LL=-12.58V R61 66.5K 1%
C21 0.1μF
C22 0.1μF
R66 1K
R65 4.7K
TTL/mV GND 75452 U4
-PUMP P1-25
2 G P5VSB
P1-7 -PUMPEN
3 M -MCLR
COMPUTER PERIPHERALS INC.
PWA
POWER SUPPLY CONTROL
CODE IDENT 05875
C
DWG NO 77040460
REV A
SHEET 4

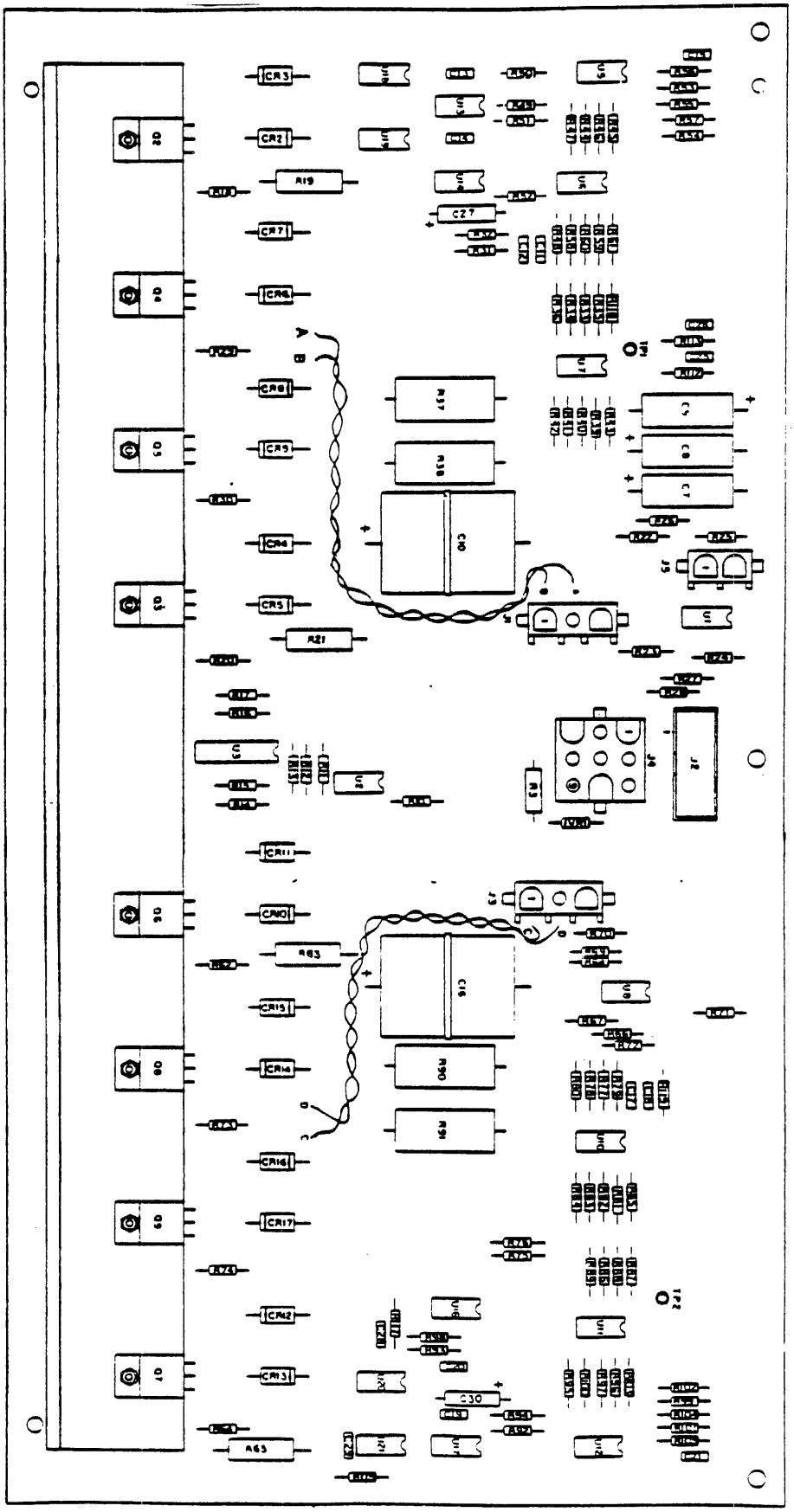

PWA POWER AMP 77041190

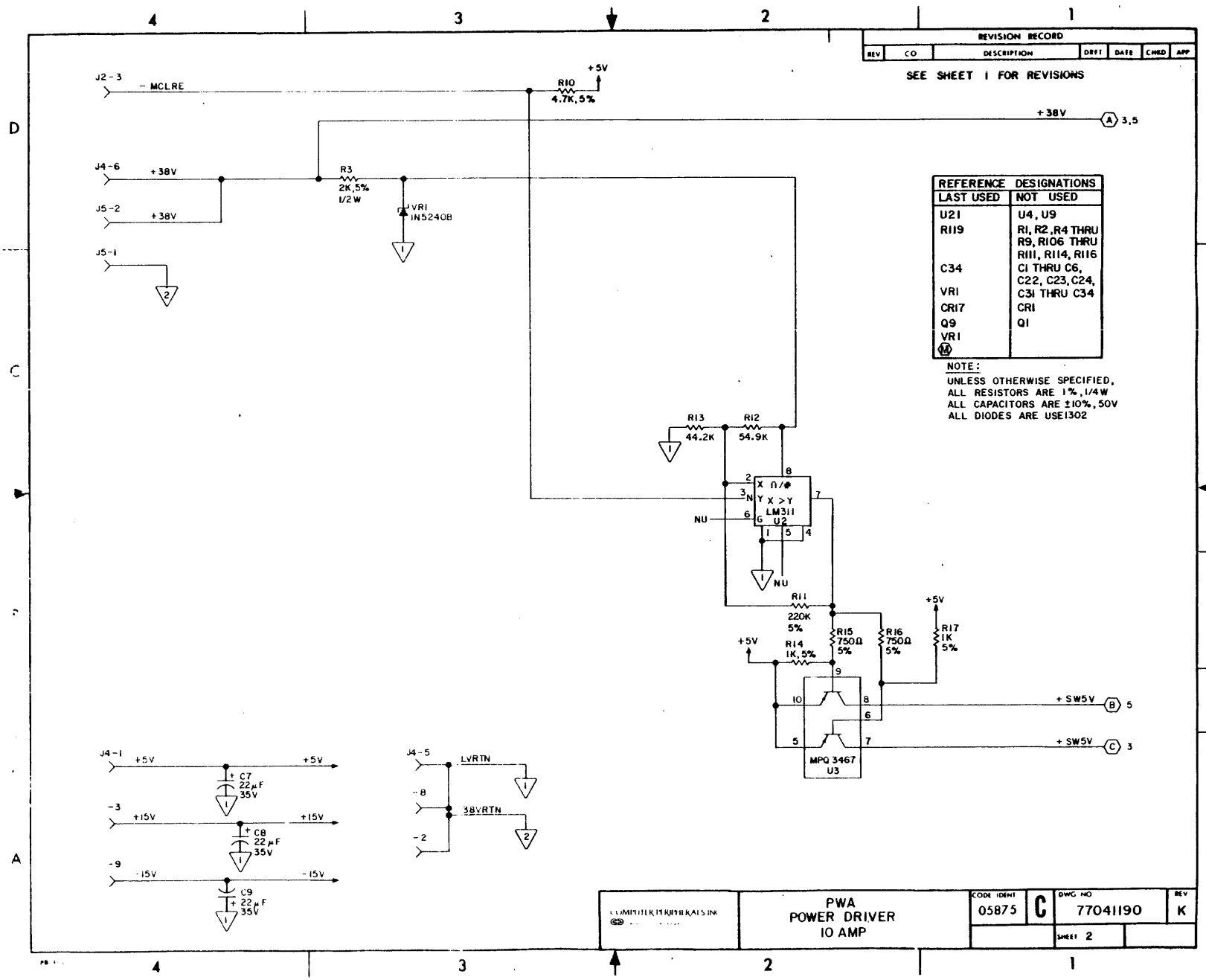
REVISION RECORD
REV | CO | DESCRIPTION | DRFT | DATE | CHKD | APP
SEE SHEET 1 FOR REVISIONS
J2-3 - MCLRE
R10 4.7K,5% +5V
+38V A 3,5
J4-6 +38V
J5-2 +38V
J5-1
R3 2K,5% 1/2W
VR1 IN5240B
REFERENCE DESIGNATIONS
LAST USED | NOT USED
U21 | U4, U9
R119 | R1, R2, R4 THRU R9, R106 THRU R111, R114, R116
C34 | C1 THRU C6, C22, C23, C24, C31 THRU C34
VR1 | CR17
CR17 | CR1
Q9 | Q1
VR1 (M)
NOTE:
UNLESS OTHERWISE SPECIFIED,
ALL RESISTORS ARE 1%, 1/4W
ALL CAPACITORS ARE ±10%, 50V
ALL DIODES ARE USE1302
R13 44.2K
R12 54.9K
X Ω/#
Y X>Y
LM311 U2
NU
R11 220K 5%
R15 750Ω 5%
R16 750Ω 5%
R17 1K 5%
R14 1K,5%
+5V
+SW5V B 5
+SW5V C 3
MPQ 3467 U3
J4-1 +5V
C7 22μF 35V
-3 +15V
C8 22μF 35V
-9 -15V
C9 22μF 35V
J4-5 LVRTN
-8 38VRTN
-2
PWA
POWER DRIVER
10 AMP
CODE IDENT 05875
C
DWG NO 77041190
REV K
SHEET 2
77041190

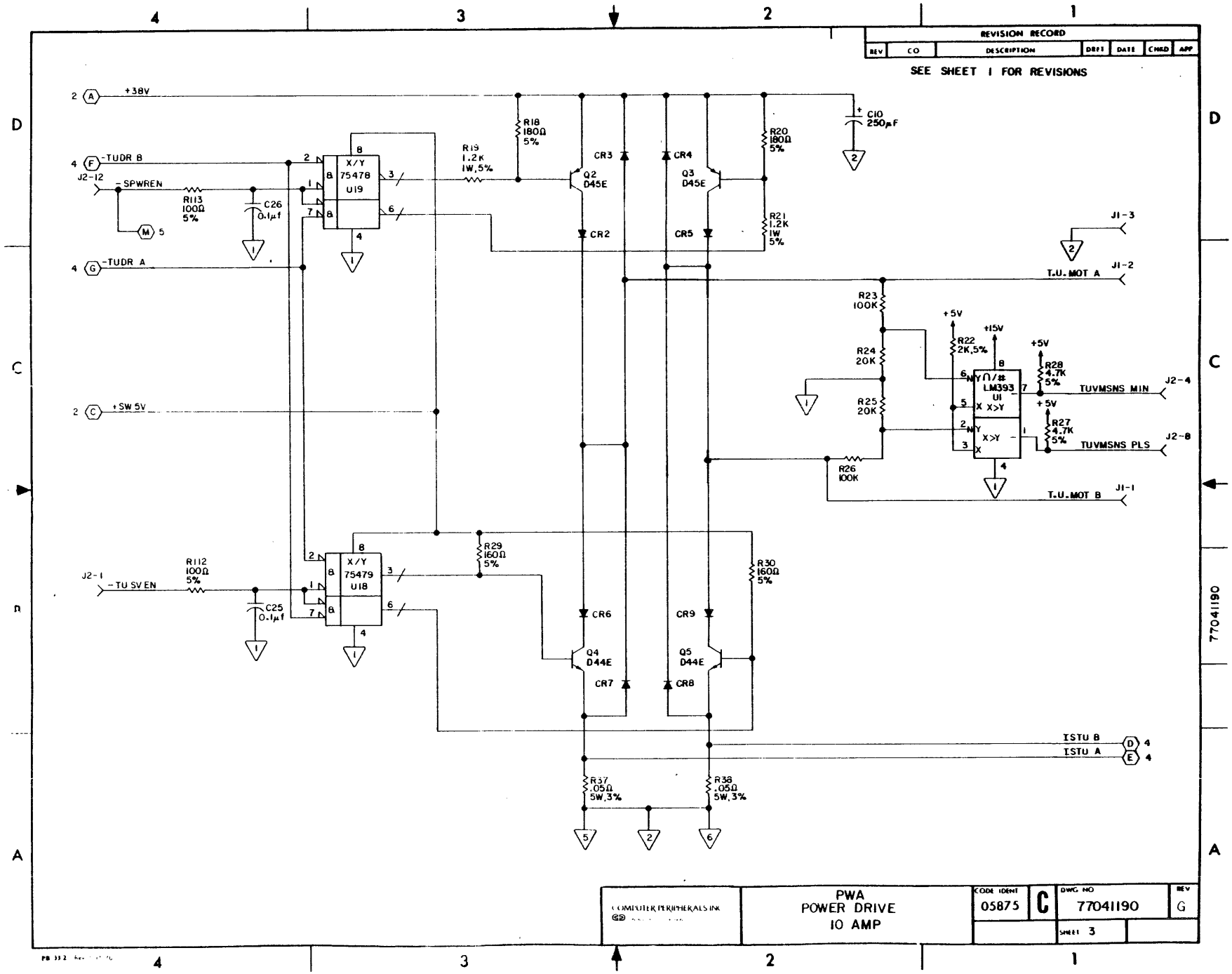
REVISION RECORD
REV | CO | DESCRIPTION | DRFT | DATE | CHKD | APP
SEE SHEET 1 FOR REVISIONS
+38V
-TUDR B
-SPWREN
-TUDR A
+SW 5V
-TU SV EN
J2-12
J2-1
R113 100Ω 5%
R112 100Ω 5%
C26 0.1μf
C25 0.1μf
X/Y 75478 U19
X/Y 75479 U18
R18 180Ω 5%
R19 1.2K 1W,5%
R20 180Ω 5%
R21 1.2K 1W 5%
C10 250μF
CR2
CR3
CR4
CR5
CR6
CR7
CR8
CR9
Q2 D45E
Q3 D45E
Q4 D44E
Q5 D44E
R23 100K
R24 20K
R25 20K
R26 100K
R22 2K,5%
R28 4.7K 5%
R27 4.7K 5%
LM393 U1
+5V
+15V
J1-3
J1-2
J1-1
T.U. MOT A
T.U. MOT B
TUVMSNS MIN
TUVMSNS PLS
J2-4
J2-8
R29 160Ω 5%
R30 160Ω 5%
R37 .05Ω 5W,3%
R38 .05Ω 5W,3%
ISTU B
ISTU A
COMPUTER PERIPHERALS INC
PWA
POWER DRIVE
10 AMP
CODE IDENT 05875
C
DWG NO 77041190
REV G
SHEET 3

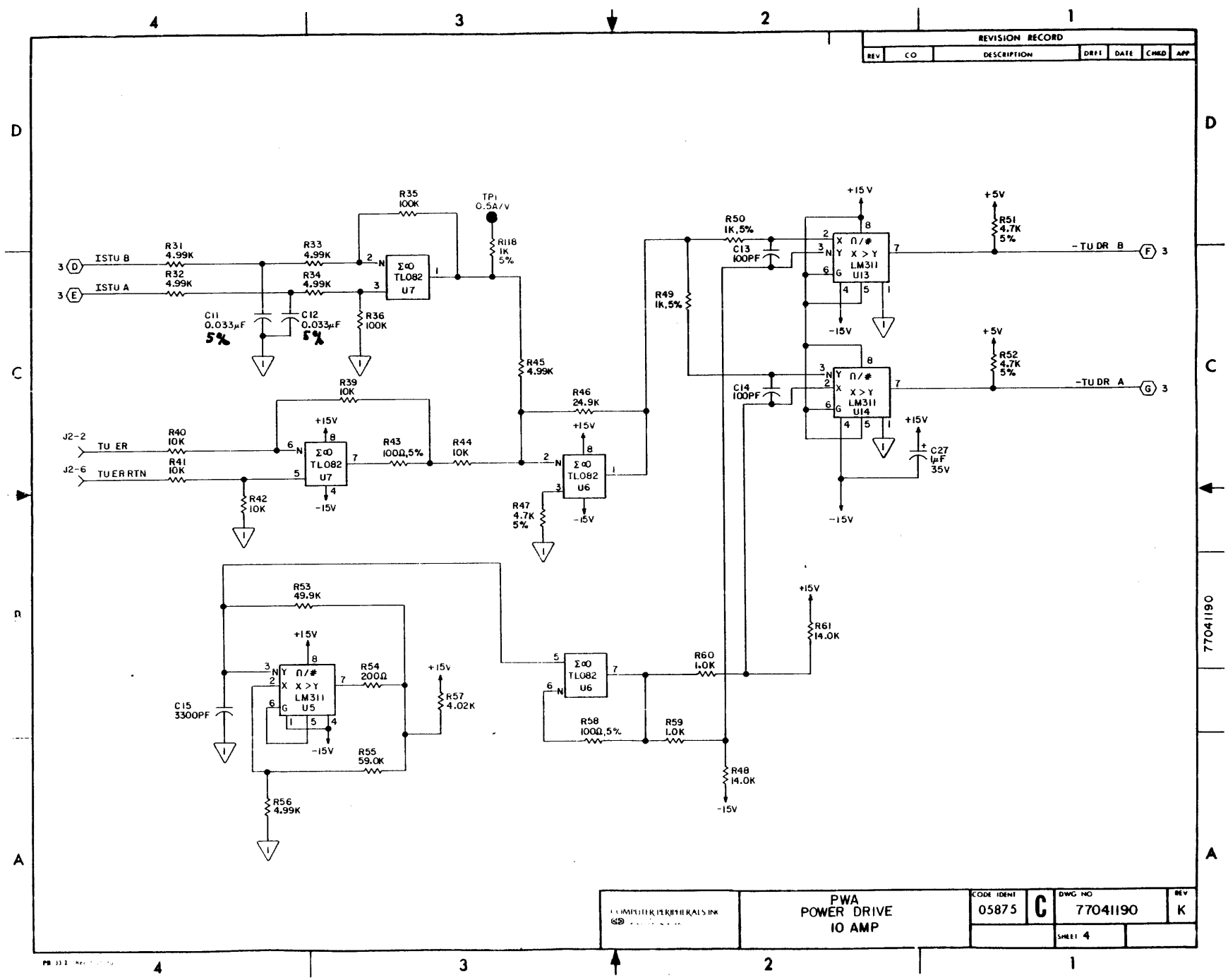
REVISION RECORD
REV
CO
DESCRIPTION
DRFT
DATE
CHKD
APP
ISTU B
ISTU A
TU ER
TUERRTN
R31 4.99K
R32 4.99K
R33 4.99K
R34 4.99K
R35 100K
R36 100K
C11 0.033µF 5%
C12 0.033µF 5%
TP1 0.5A/V
R118 1K 5%
R39 10K
R40 10K
R41 10K
R42 10K
R43 100Ω,5%
R44 10K
R45 4.99K
R46 24.9K
R47 4.7K 5%
R49 1K,5%
R50 1K,5%
C13 100PF
C14 100PF
R51 4.7K 5%
R52 4.7K 5%
C27 1µF 35V
-TU DR B
-TU DR A
R53 49.9K
R54 200Ω
R55 59.0K
R56 4.99K
R57 4.02K
C15 3300PF
R58 100Ω,5%
R59 1.0K
R60 1.0K
R61 14.0K
R48 14.0K
TL082 U7
TL082 U6
LM311 U13
LM311 U14
LM311 U5
+15V
-15V
+5V
COMPUTER PERIPHERALS INC
PWA
POWER DRIVE
10 AMP
CODE IDENT 05875
C
DWG NO 77041190
REV K
SHEET 4

77041190

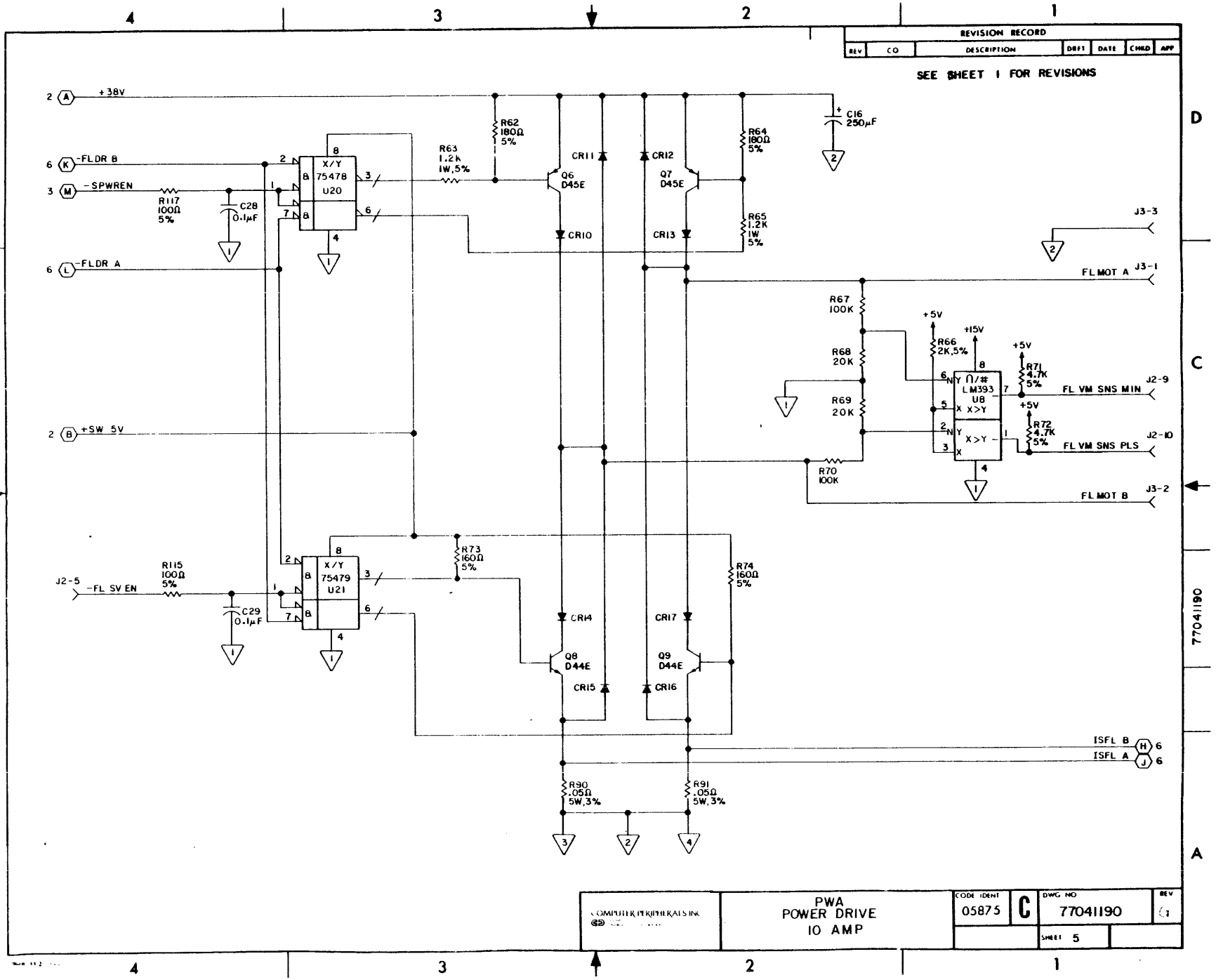
REVISION RECORD
REV
CO
DESCRIPTION
DRFT
DATE
CHKD
APP
SEE SHEET 1 FOR REVISIONS
+38V
-FLDR B
-SPWREN
-FLDR A
+SW 5V
J2-5
-FL SV EN
R117 100Ω 5%
C28 0.1μF
C29 0.1μF
R115 100Ω 5%
X/Y 75478 U20
X/Y 75479 U21
R62 180Ω 5%
R63 1.2k 1W,5%
R64 180Ω 5%
R65 1.2K 1W 5%
R73 160Ω 5%
R74 160Ω 5%
C16 250μF
CR11
CR12
CR13
CR10
CR14
CR15
CR16
CR17
Q6 D45E
Q7 D45E
Q8 D44E
Q9 D44E
R90 .05Ω 5W,3%
R91 .05Ω 5W,3%
ISFL B
ISFL A
J3-3
FL MOT A
J3-1
FL MOT B
J3-2
R67 100K
R68 20K
R69 20K
R70 100K
R66 2K,5%
R71 4.7K 5%
R72 4.7K 5%
+5V
+15V
LM393 U8
X>Y
FL VM SNS MIN
J2-9
FL VM SNS PLS
J2-10
PWA
POWER DRIVE
10 AMP
COMPUTER PERIPHERALS INC
CODE IDENT
05875
C
DWG NO
77041190
REV
SHEET 5

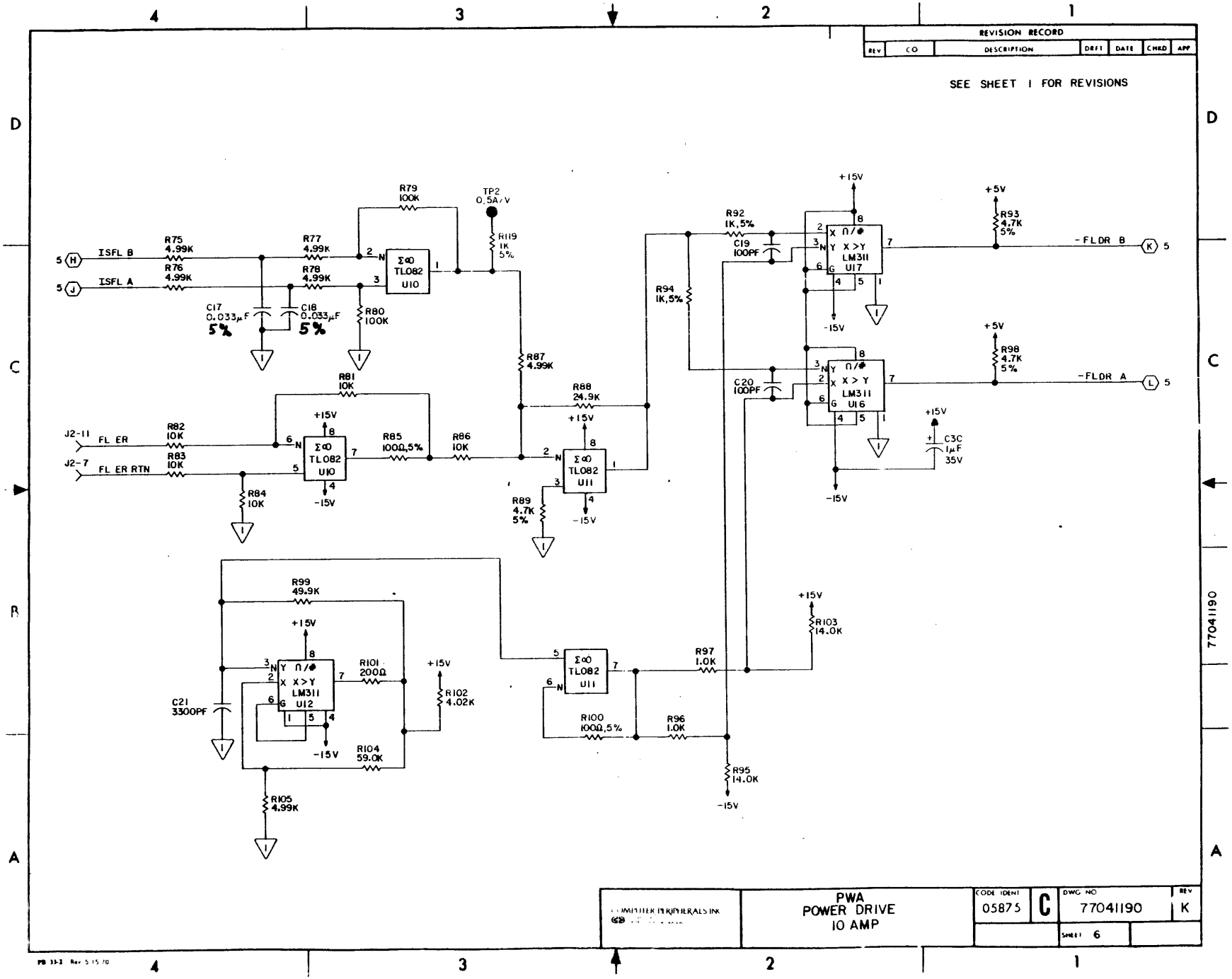
REVISION RECORD
REV | CO | DESCRIPTION | DRFT | DATE | CHKD | APP
SEE SHEET 1 FOR REVISIONS
ISFL B
ISFL A
FL ER
FL ER RTN
J2-11
J2-7
R75 4.99K
R76 4.99K
R77 4.99K
R78 4.99K
R79 100K
R80 100K
R81 10K
R82 10K
R83 10K
R84 10K
R85 100Ω,5%
R86 10K
R87 4.99K
R88 24.9K
R89 4.7K 5%
R92 1K,5%
R93 4.7K 5%
R94 1K,5%
R95 14.0K
R96 1.0K
R97 1.0K
R98 4.7K 5%
R99 49.9K
R100 100Ω,5%
R101 200Ω
R102 4.02K
R103 14.0K
R104 59.0K
R105 4.99K
R119 1K 5%
C17 0.033μF 5%
C18 0.033μF 5%
C19 100PF
C20 100PF
C21 3300PF
C3C 1μF 35V
TP2 0.5A/V
ΣΩ TL082 U10
ΣΩ TL082 U11
ΣΩ TL082 U11
X Y LM311 U16
X Y LM311 U17
X Y LM311 U12
+15V
-15V
+5V
-FLDR B
-FLDR A
PWA
POWER DRIVE
10 AMP
CODE IDENT 05875
C
DWG NO 77041190
REV K
SHEET 6
COMPUTER PERIPHERALS INC.

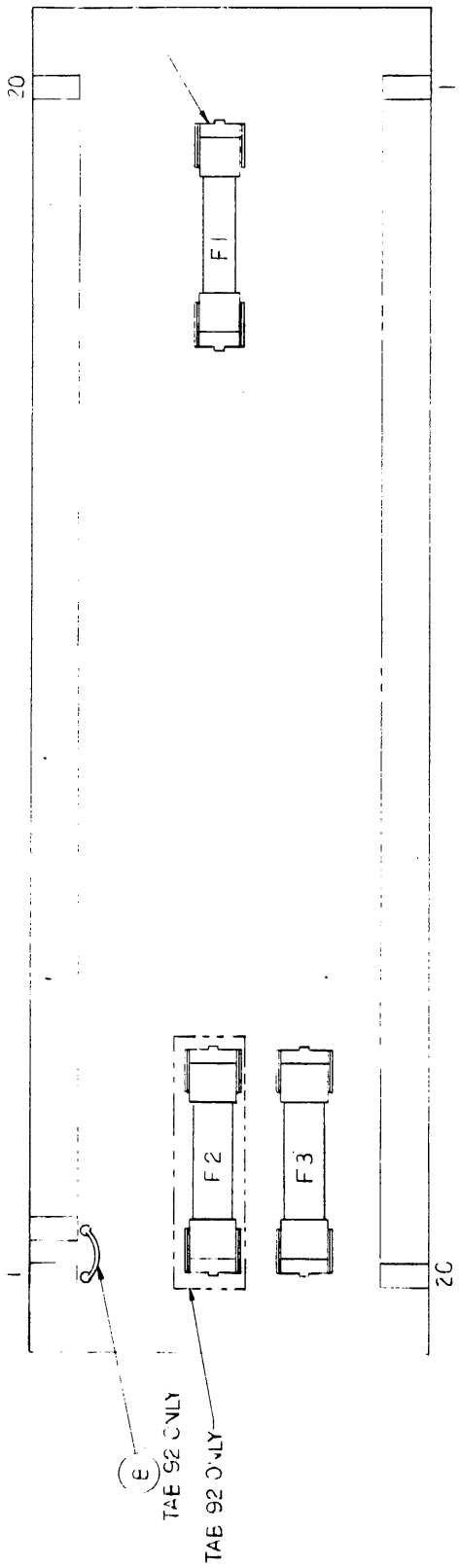

POWER SUPPLY VOLTAGE SELECT PWA P/N 77040590

REVISION RECORD						
REV	CO	DESCRIPTION	DRFT	DATE	CHKD	APP

SEE SHEET 1 FOR REVISIONS

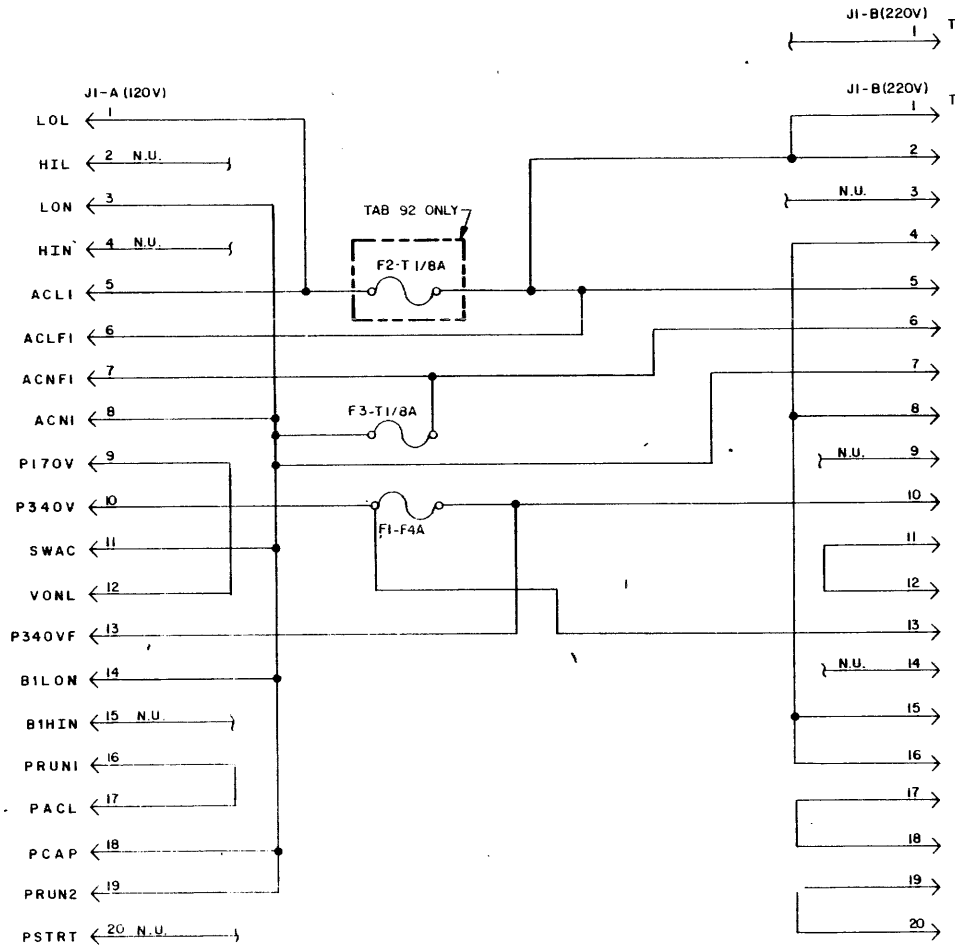

COMPUTER PERIPHERALS INC.	PWR SPLY VOLTAGE SELECT	CODE IDENT 05875	C	DWG NO 77040590 REV F
				SHEET 2

77040590

Read/Write/Servo PWA

ACKM	Acknowledge Master
ADRS	Address
AOT	Absence of Tape
AOT ENAB	Absence of Tape Enable
ATTNM	Attention Master
AUTENAB	Above Upper Tension Enable
BLTENAB	Below Lower Tension Enable
BOT	Beginning of Tape
BOT ANO	Beginning of Tape Anode
BOT CATH	Beginning of Tape Cathode
BOT COL	Beginning of Tape Collector
BOT EMIT	Beginning of Tape Emitter
BOT/EOT LEV	BOT/EOT Level
CLIP LEVEL	Clip Level
+CMOSENA	+CMOS RAM Enable
-CMOSENAB	-CMOS RAM Enable
D/C CMP	Digital to Analog Converter Compare
DEGAUSS	Degauss
DIAG FLBK	Diagnostic File Backward
DIAG FLFD	Diagnostic File Forward
DIAG TUBK	Diagnostic Take Up Backward
DIAG TUFD	Diagnostic Take Up Forward
DIVTACHB	Divided Tach (Latched)
DIVTACH RST	Divide Tach Reset
DMDVEL	Demand Velocity
DOOR1FLT	Door Fault (Switch 1)
DOOR2FLT	Door Fault (Switch 2)
EGC ADRS	Electronic Gain Control Address
EGC CLIP	Electronic Gain Control Clip
EGC VAL	Electronic Gain Control Valid
ENV	Envelope
EOT	End of Tape
EOT ANO	End of Tape Anode
EOT CATH	End of Tape Cathode
EOT COL	End of Tape Collector
EOT EMIT	End of Tape Emitter
ERSENAB	Erase Enable
ERSENS	Erase Sense
FAULT	Fault
FBLTL	File Below Lower Tension Limit
FDCT	Forward Count Tach
-FILPRO	Negative File Protect
+FILPRO	Positive File Protect
FLIDXANO	File Index Anode
FLIDXCATH	File Index Cathode

Read/Write/Servo PWA (Cont'd)

FLIDXCOL	File Index Collector
FLIDXEMIT	File Index Emitter
FLPROANO	File Protect Anode
FLPROCATH	File Protect Cathode
FLSVEN	File Servo Enable
FLTACH	File Tach (Latched)
FLVMSNSMIN-	File Voltage Motor Sense Minus
FLVMSNSPLS+	File Voltage Motor Sense Plus
-FREF	Negative File Reference
+FREF	Positive File Reference
FTENOFF	File Tension Offset
FTENZERO	File Tension Sensor Zeroed
FWD	Forward
GATE1	Gate 1
GATE2	Gate 2
HSELECT	High Select
HSPEED	High Speed
INGRP	Input Group
LSELECT	Low Select
MCLR	Master Clear
MPUADRS	MPU Address
MPUDATA	MPU Data
MPURST	MPU Reset
NMI	Non-Maskable Interrupt
NMIRST	Non-Maskable Interrupt Reset
OGRP	Output Group
PARLD	Parallel Load
oATUTACH	Phase A Take Up Tach
oBTUTACH	Phase B Take Up Tach
PTMENAB	Programmable Timer Enable
PRKD	Parked
PUMPEN+	Pump Enable Positive
PUMPEN-	Pump Enable Negative
RECALL	E^2 PROM Recall
REWIND	Rewind
RVCT	Reverse Count Tach
R/W	Read/Write
R/W LOOP	NU (Not Used)
SINDEXFL	Index Tach (File)
SPWREN+	Servo Power Enable Positive
SPWREN-	Servo Power Enable Negative
STORE	E^2 PROM Store
SW1A	Switch 1A

Read/Write/Servo PWA (Cont'd)

SW1ARTN	Switch 1A Return
SYSRST	System Reset
TACHRST-	Tach Reset Negative
TAUTL	Take Up Above Upper Tension Limit
TBLTL	Take Up Below Lower Tension Limit
TRD	Transport Read Data
TREF-	Take Up Reference Negative
TREF+	Take Up Reference Positive
TTENOFF	Take Up Tension Offset
TTENZERO	Take Up Tension Sensor Zeroed
TUER	Take Up Error
TUERTN	Take Up Error Return
TUSVEN	Take Up Servo Enable
TUVMSNSMIN-	Take Up Voltage Motor Sense Negative
TUVMSNSPLS+	Take Up Voltage Motor Sense Positive
TWD	Transport Write Data
T10Z	Take Up Tension at 10 Ounces
WRTCUR	Write Current
WRTENAB	Write Enable
0CLIP	Zero Clip
100IPS	One Hundred Inches Per Second

Formatter/Control PWA

A0-2	Address 0-2
ACKM	Acknowledge Master
ACKS	Acknowledge Slave
ATTM	Attention Master
ATTMS	Attention Slave
BLOCK	Data Block
BOTL	Beginning of Tape Level
BTMUX	Bit Test Mux
CARRY	Carry
CDATA0-7, P	Corrected Data 0-7, P
CHNEN	Channel Enable
CHNPE	Channel Parity Error
CHNSEL	Channel Select
CNTEN	Count Enable
CORRERR	Correct Error
CORRPAR	Correct Parity
D0-7	Data 0-7
DATAMKR	Data Marker
DATLB	Data Loopback
DGEN	Degauss Enable
DIAGLED	Diagnostic LED
DMODE	Diagnostic Mode

Formatter/Control PWA (Cont'd)

DROP0-7	Drop 0-7
DZERO2	Data Zero 2
ENVEN	Envelope Enable
ENVP	Envelope Parity
EOTL	End of Tape Level
FBY	Formatter Busy
FBSY	Formatter Busy
FCER	Formatter Correctable Error
FD0-7	Formatter Data 0-7
FDBY	Formatter Data Busy
FDP	Formatter Data Parity
FDWDS	Formatter Demand Write Data Strobe
FEN	Formatter Enable
FERASE	Formatter Erase
FFAD	Formatter Address
FFEN	Formatter Enable
FFMK	Formatter File Mark
FGO	Formatter Go
FHER	Formatter Hard Error
FIDENT	Formatter Ident. Burst
FLGAP	Formatter Long Gap
FLOL	Formatter Load On-Line
FLOOP	Formatter Loop Read-to-Write
FPTL	File Protect Level
FREV	Formatter Reverse
FREW	Formatter Rewind
FRSTR	Formatter Restore
FRWD	Formatter Rewind Status
FSENSE	Formatter Sense
FTAD0	Formatter Transport Address 0
FTAD1	Formatter Transport Address 1
FULC	Formatter Unload Command
FWRT	Formatter Write
GO	Go
GPC	Gap Count
HSPDL	High Speed Level
ID	Ident. Control
IRQ	Interrupt Request
IRQA	Interrupt Request A
IRQB	Interrupt Request B
LD1-4	Left Digit 1-4
LWD	Last Word
MARK	Mark (All 1's Cont. Signal)
MCLR	Master Clear
MRST	Master Reset
MUXEN	Multiplexer Enable
MLTDROP	Multiple Drop

Formatter/Control PWA (Cont'd)

NO TRK PTR	No Track Pointer
ONL	On-Line
PCLK	Phase Clock (25 x Data Rate)
PCLK1-3	Phase Clock 1-3
PIA0-4	Peripheral Interface Adapter 0-4
POSL	Position Level
POSTAMFD	Postamble Found
POSTAMNZ	Postamble Not Zero
PTM	Programmable Timer Module
PUMPEN	Pump Enable
RDP, 0-7	Read Data P, 0-7
RDY	Ready
R/W	Read/Write
S0, S1	Sequence 0, 1
SDSTR	Sense Data Strobe
SELEN1	Select Enable 1
SR	Set/Reset
SYSEN	System Enable
SYSRST	System Reset
UNLDBUF	Unload Buffer
WCLK	Write Clock
WDEN	Write Data Enable
WREN	Write Enable
WRT BSY	Write Busy
2XWCLK	2 x Write Clock

Power Amplifier PWA

FLER	File Error
FLER RTN	File Error Return
FLSVEN	File Servo Enable
ICCW	Current Counterclockwise
ICW	Current Clockwise
MCLR	Master Clear
SPWREN	Servo Power Enable
TRIANGLE	Triangle Generator
TRISYPLS	Triangle Sync Pulse
TUER	Take Up Error
TUER RTN	Take Up Error Return
TUSVEN	Take Up Servo Enable

MAINTENANCE 6

GENERAL DESCRIPTION

The maintenance section of this manual provides information for trouble analysis, removal and replacement of Streaming Tape Unit (STU) assemblies, and verification tests to determine the transports operability. All diagnostic tests are designed for off-line use and are independent of the host controller. The removal/replacement procedures follow a concept of modular (assembly) replacement only. Individual circuit troubleshooting or assembly repair are not recommended and are, therefore, not within the scope of this manual.

The maintenance information is divided into two major areas: Trouble Analysis and Removal/Replacement Procedures.

TROUBLE ANALYSIS

The principles involved in trouble analysis of the STU consist of interpreting fault codes, which appear on the diagnostic display on the operator control panel, in the event of failure. The trouble analysis section provides information on the operation of the diagnostic portion of the control panel, interpretation of fault codes, description of diagnostic tests, and lists the corrective action to restore the STU to an operable condition.

The trouble analysis information is presented in the following order:

1. CE Procedures before arriving at the customer's location (pre-site) and after arrival (on-site).
2. Use of Correction Action tables.
3. Diagnostic Test information.
4. Structured Analysis Method (SAM) tables.
5. Functional Description of CE tests.

REMOVAL/REPLACEMENT PROCEDURES

This portion of the maintenance section contains instructions on how to remove and replace all field replaceable parts or assemblies of the STU. Location and identification of assemblies can be referenced to Section 7 - PARTS IDENTIFICATION.

Reference into the Removal/Replacement Procedures is primarily via the Structured Analysis Method (SAM) Tables contained in the Trouble Analysis portion of this section. Verification tests follow each of the replacement procedures so that the integrity of the replaced assembly can be insured, prior to returning the transport to an on-line status.

Table 6-1. REFERENCED MAINTENANCE AIDS

AID	USED ON
Digital Voltmeter	Voltage Checks
3M777 Tape (or equivalent)	Magnetic Head Replacement Verification Check and Read/Write/Servo PWA Replacement

TROUBLE ANALYSIS

GENERAL DESCRIPTION

This section of the manual contains diagnostic test procedures, Structured Analysis Method (SAM) Tables, and a description of the diagnostic tests.

NOTES

1. The procedures contained in this section of the manual are intended for use by a qualified customer engineer, familiar with the operation of the Streaming Tape Unit (STU). Under no circumstances should these procedures be performed by persons other than fully qualified maintenance personnel.

2. The operator diagnostic procedures referenced in this section of the manual are expanded for maintenance personnel use. Diagnostics for use by the operator are contained in the OPERATION section of the Reference Manual.

The diagnostic tests designed into the STU are an off-line function initiated through the operator control panel. There are no on-line diagnostics, however, the host controller is capable of monitoring STU status through the Status Transfer command. A Channel Loopback command is also provided to exercise the formatter logic of the STU.

Although on-line diagnostics are not part of the STU, the microprocessor tests for many operational fault conditions while operating on-line. These conditions are indicated as fault codes, appearing on the control panel display. The fault condition is indicated by illumination of the Reset indicator and the appropriate fault code being displayed. Faults, which occur while tape is loaded, may initiate a controlled removal by the microprocessor of servo and write circuitry power to prevent tape damage.

CUSTOMER ENGINEER PROCEDURES

Trouble analysis procedures by the customer engineer consist of a pre-site determination of the reported problem, and an on-site procedure to isolate and correct verified faults.

PRE-SITE PROCEDURES

When the trouble call is received from the site, the customer engineer should proceed as follows:

1. Consult Tables 6-2 and 6-3, Corrective Action Matrices, to determine if operator action is required. Specific STU malfunctions or fault codes indicate the need for operator action in the form of visual checks, cleaning, or performing Operator Diagnostic Test 01. It should also be verified that Operator Diagnostic Test 01 has been performed after the operator corrective actions have been completed.

2. After verifying that the fault still occurs following completion of all operator actions, consult Table 6-2 or Table 6-3 for a list of assemblies related to the reported malfunction or fault code. As many of these assemblies, as are available, should be taken to the site to prevent unnecessary call-backs.

Corrective Action Matrices

The Malfunction and Fault Code Matrices (Tables 6-2 and 6-3) list all malfunctions or fault codes and possible assemblies which may cause the fault condition. The purpose of this table is to provide a list of related assemblies prior to reporting to the customer site. Assemblies listed under the individual malfunction or fault codes are arranged in a "most probable fault" order. In addition to the assemblies listed, the table may direct the customer engineer to request the operator to perform Diagnostic Test 02 or Test 03. Test 02 is required if Fault Codes 22, 24, 26, 30, 31 or 36 terminate Operator Diagnostic Test 01. Tables 6-4 thru 6-7 list possible failing assemblies for fault codes which terminate Test 02.

Test 03 is required if Fault Codes 04, 06, 22, 25, 26, 30, 31, 32, 33, 35, 36, 48 or 52 terminate Operator Diagnostic Test 01. Tables 6-8 and 6-9 list possible failing assemblies for fault codes which terminate Test 03.

Also contained on the matrices in Tables 6-2 and 6-3 are those actions (A, B, C) which should be performed by the operator. These actions should be verified prior to any on-site call by the customer engineer.

Table 6-2. MALFUNCTION MATRIX

MALFUNCTION / CORRECTIVE ACTION	FOLLOWING THE DEPRESSION OF POWER SWITCH (CIRCUIT BREAKER) TO THE '1' POSITION, THE "LOGIC OFF" LED DOES NOT ILLUMINATE.	FOLLOWING THE DEPRESSION OF THE "LOGIC ON" SWITCH, THE "LOGIC ON" LED DOES NOT ILLUMINATE.	STU DISPLAYS 00 ON POWER UP.	STU POWERS DOWN WHILE IN USE.	OPERATOR PANEL SWITCH DOES NOT OPERATE.	STU OPERATES WITH OPERATOR DOOR OPEN.	FILE PROT. LED DOES NOT ILLUMINATE WHEN A WRITE PROTECTED TAPE IS LOADED.	TAKE UP REEL DOES NOT TURN FREELY.	SUPPLY REEL DOES NOT TURN FREELY.	SUPPLY REEL HUB CANNOT BE LATCHED.	EXCESSIVE PNEUMATIC NOISE.
ENSURE STU IS PLUGGED INTO A LIVE SUPPLY	A										
ENSURE OPERATION IS LEGAL					A						
CHANGE TAPE										A	
READ/WRITE/SERVO		4		3		2	2				
FORMATTER/CONTROL		5	1		2		5				
POWER SUPPLY	1	1	2	1							
POWER AMPLIFIER		3		2							
OPERATOR PANEL	3	2			1		3				
PNEUMATIC PUMP											1
PRESSURE REGULATOR											2
SUPPLY MOTOR/TACH				5					1		
SUPPLY HUB							4		2	1	
TAKE-UP MOTOR/TACH				4				1			
TAKE UP HUB								2			
DOOR SWITCH						1					
FILE PROTECT SENSOR							1				
COOLING FAN	2										

Table 6-3. FAULT CODE MATRIX (OPERATOR TEST 01)

FAILING ASSEMBLY	00	01	02	03	04	05	06	07	08	09	10	11	12	13	14	15	16	17	18	19	20	21	22	23	24	25	26	27	28	29
Test Successful	X																													
Latch Hub Correctly													A										A			A				
Thread Tape Correctly												A		A				A												A
Clean Head/Tape Path		A	A	A	A	A	A	A	A				C										B			B				
Change Tape		B	B	B	B	B	B	B	B				B		A		A	B					C			C				B
Close Door											A																			
Run Test 02 (See NOTE)																							X		X		X			
Run Test 03 (See NOTE)					X		X																X			X	X			
Read/Write/Servo		2	2	2	1	1	1	1	1		2	2	1	3	2	2	2	1	2		2	2	4	1	2	2	4	1	1	2
Formatter/Control		3	3	1	2	2	2	2	2							3	3	2	1											
Power Supply														2																
Power Amplifier					4		4																5		3	4	5			
Operator Panel																1														
Pneumatic Pump														1																
Filter														4																
Upper Air Bearing																					1									
Lower Air Bearing																						1								
Head (Amplitude Error)		1	1																											
Head (Data Reliability)				3	3	3	3	3	3		3																			
Supply Motor/Tach													3										3		1		3	2		
Supply Hub													2				4						1			1				
Take-Up Motor/Tach					5		5																2			3	1			
EOT/BOT Sensor												1			1															1
Door Switch											1																2			
File Protect Sensor																	1													
Pressure Regulator														5																

NOTE: Tests 02 and 03 should not be used unless Test 01 directs their use. Test 02 will fail if run Stand-alone.

Table 6-3. FAULT CODE MATRIX (Cont'd)

FAILING ASSEMBLY	30	31	32	33	34	35	36	37	38	39	40	41	42	43	44	45	46	47	48	49	50	51	52	53	54	55	56	57	58	59	60	61
Test Successful																																
Latch Hub Correctly																																
Thread Tape Correctly																																
Clean Head/Tape Path	A	A																	A													
Change Tape																			B													
Close Door																																
Run Test 02 (See NOTE)	X	X					X																									
Run Test 03 (See NOTE)	X	X	X	X		X	X												X				X									
Read/Write/Servo	1	1	2	1	1	1	1											1	1		1	1	2	1	1	1	1	1				
Formatter/Control																					2						2	2	1	1	2	2
Power Supply																																
Power Amplifier	2	2	1				2																									
Operator Panel																															1	1
Pneumatic Pump	4	4	4				4																									
Filter	5	5	5				5																									
Upper Air Bearing	7	7					7																									
Lower Air Bearing	8	8					8																									
Head (Amplitude Error)																																
Head (Data Reliability)																									2							
Supply Motor/Tach																			2				3									
Supply Hub																							4									
Take-Up Motor/Tach	3	3	3	2		2	3												3				1									
EOT/BOT Sensor	9	9																														
Door Switch																																
File Protect Sensor																																
Pressure Regulator	6	6	6				6																									

NOTE: Tests 02 and 03 should not be used unless Test 01 directs their use. Test 02 will fail if run Stand-alone.

Test 02 Follow-up

Refer to Table 6-4 if, after running Operator Test 01, Fault Code 22 appears on the display. Table 6-3 indicates that Test 02 is required if operator actions A, B and C did not resolve the problem. If Test 02 is unsuccessful, refer the fault code displayed to this table for probable failing assemblies.

Table 6-4. TEST 02 TERMINATION CODES FOLLOWING TEST 01 FAULT CODE 22

FAILING ASSEMBLY	71	72	73	74	75	80	81	82	83	84	85	86	87	89	90	91	92	97	98	00
Ensure Tape is Thd'd	A																			
Repeat Test	B																			A
Read/Write/Servo	1	1	1	1	1	1	1	1	1	1	1	1	1	1	1	1	2	1	1	1
Power Amplifier		2	2	2	2	2	2	2	2		2	2	2	2	2	2		2	2	2
Pneumatic Pump																				
Filter																				
Upper Air Bearing																				
Lower Air Bearing																				
Supply Motor/Tach																	1			
Supply Hub		3	3	3	3	3	3	3	3	3	3	3	3	3	3	3	3	3	3	3
Take-Up Motor/Tach		4	4	4	4	4	4	4	4	2	4	4	4	4	4	4		4	4	4
Pressure Regulator																				

Refer to Table 6-5 if, after running Operator Test 01, Fault Code 24 appears on the display. Table 6-3 indicates that Test 02 is required. If Test 02 is unsuccessful, refer the fault code displayed to this table for probable failing assemblies.

Table 6-5. TEST 02 TERMINATION CODES FOLLOWING TEST 01 FAULT CODE 24

FAILING ASSEMBLY	71	72	73	74	75	80	81	82	83	84	85	86	87	89	90	91	92	97	98	00
Ensure Tape is Thd'd	A																			
Repeat Test	B																			A
Read/Write/Servo	1	1	3	1	3	1			1	1	1	1	1	1	1	1	3	1	3	1
Power Amplifier		2	2	2	2	2	1	1	2	2	2	2	2	2	2	2	2	2	2	2
Pneumatic Pump																				
Filter																				
Upper Air Bearing																				
Lower Air Bearing																				
Supply Motor/Tach			1		1												1		1	
Supply Hub																				
Take-Up Motor/Tach																				
Pressure Regulator																				

Refer to Table 6-6 if, after running Operator Test 01, Fault Code 26 appears on the display. Table 6-3 indicates that Test 02 is required. If Test 02 is unsuccessful, refer the fault code displayed to this table for probable failing assemblies.

Table 6-6. TEST 02 TERMINATION CODES FOLLOWING TEST 01 FAULT CODE 26

FAILING ASSEMBLY	71	72	73	74	75	80	81	82	83	84	85	86	87	89	90	91	92	97	98	00
Ensure Tape is Thd'd	A																			
Repeat TEst	B																			A
Read/Write/Servo	1	1	1	1	1	1	3	3	1	2	1	1	1	1	1	1	1	1	1	1
Power Amplifier							1	1												
Pneumatic Pump																				
Filter																				
Upper Air Bearing																				
Lower Air Bearing																				
Supply Motor/Tach							2													
Supply Hub																				
Take-Up Motor/Tach		2	2	2	2	2		2	2	1	2	2	2	2	2	2	2	2	2	2
Pressure Regulator																				

Refer to Table 6-7 if, after running Operator Test 01, Fault Code 30, 31 or 36 appears on the display. Table 6-3 indicates that Test 02 is required if operator action "A" did not resolve the problem. If Test 02 is unsuccessful, refer the fault code displayed to this table for probable failing assemblies.

Table 6-7. TEST 02 TERMINATION CODES FOLLOWING TEST 01 FAULT CODES 30, 31, OR 36

FAILING ASSEMBLY	71	72	73	74	75	80	81	82	83	84	86	87	89	90	91	92	97	98	00
Ensure Tape is Thd'd	A																		
Repeat Test	B																		A
Read/Write/Servo	1		2		2	3	3	3	3	2	3	3			3		3	3	3
Power Amplifier						1	1	1	1		1	1					1	1	1
Pneumatic Pump		3	4	3	4										2	2			
Filter		2		2												1			
Upper Air Bearing				1	1								1						
Lower Air Bearing		1	1											1					
Supply Motor/Tach																			
Supply Hub																			
Take-Up Motor/Tach						2	2	2	2	1	2	2					2	2	2
Pressure Regulator		4	3	4	3										1	3			

Test 03 Follow-Up

Refer to Table 6-8 if, after executing Operator Test 01, Fault Code 04 or 06 appears on the display. Table 6-3 indicates that Test 03 is required if operator actions A or B did not resolve the problem. If Test 03 is unsuccessful, refer the fault code displayed to this table for probable failing assemblies.

Table 6-8. TEST 03 TERMINATION CODES FOLLOWING TEST 01 FAULT CODE 04 OR 06

	82	84	94	95	96	98	00
OPERATOR ACTION							
Ensure Tape is Not Thd'd			A				
Repeat Test			B	A			A
FAILING ASSEMBLY							
Read/Write/Servo		2	1	1	2	1	1
Power Amplifier	1						
Read-Write Head							3
Take-Up Motor/Tach		1			1	2	
Formatter Control				2			2

Refer to Table 6-9 if, after executing Operator Test 01, Fault Code 26 or 32 appears on the display. Table 6-3 indicates that Test 03 is required. If Test 03 is unsuccessful, refer the fault code to this table for probable failing assemblies.

Table 6-9. TEST 03 TERMINATION CODES FOLLOWING TEST 01 FAULT CODE 26 OR 32

	82	84	94	95	96	98	00
OPERATOR ACTION							
Ensure Tape is Not Thd'd			A				
Repeat Test			B	A			A
FAILING ASSEMBLY							
Read/Write/Servo		2	1	1		2	1
Power Amplifier	1				2		2
Read-Write Head							
Take-Up Motor/Tach		1			1		3
Pneumatic Pump							4
Filter							5
Pressure Regulator							6

Refer to Table 6-10 if, after executing Operator Test 01, Fault Code 22 appears on the display. Table 6-3 indicates that Test 03 is required if operator actions A or B did not resolve the problem. If Test 03 is unsuccessful, refer the fault code displayed to this table for probable failing assemblies.

Table 6-10. TEST 03 TERMINATION CODES FOLLOWING TEST 01 FAULT CODE 22

	82	84	94	95	96	98	00
OPERATOR ACTION							
Ensure Tape is Not Thd'd			A				
Repeat Test			B	A			A
FAILING ASSEMBLY							
Read/Write/Servo	2	1	1	1	2	2	1
Power Amplifier	1	2					2
Read-Write Head							
Take-Up Motor/Tach					1	1	

Refer to Table 6-11 if, after executing Operator Test 01, Fault Code 25 appears on the display. Table 6-3 indicates that Test 03 is required. If Test 03 is unsuccessful, refer the fault code to this table for probable failing assemblies.

Table 6-11. TEST 03 TERMINATION CODES FOLLOWING TEST 01 FAULT CODE 25

	82	84	94	95	96	98	00
OPERATOR ACTION							
Ensure Tape is Not Thd'd			A				
Repeat Test			B	A			A
FAILING ASSEMBLY							
Read/Write/Servo	2	2	1	1	2	2	2
Power Amplifier	1	1			1		1
Read-Write Head							
Take-Up Motor/Tach						1	

Refer to Table 6-12 if, after executing Operator Test 01, Fault Code 33 or 35 appears on the display. Table 6-3 indicates that Test 03 is required if operator actions A or B did not resolve the problem. If Test 03 is unsuccessful, refer the fault code displayed to this table for probable failing assemblies.

Table 6-12. TEST 03 TERMINATION CODES FOLLOWING TEST 01 FAULT CODE 33 OR 35

	82	84	94	95	96	98	00
OPERATOR ACTION							
Ensure Tape is Not Thd'd			A				
Repeat Test			B	A			A
FAILING ASSEMBLY							
Read/Write/Servo	1	1	1	1	1		1
Power Amplifier	2						
Read-Write Head							
Take-Up Motor/Tach						1	

Refer to Table 6-13 if, after executing Operator Test 01, Fault Code 48 appears on the display. Table 6-3 indicates that Test 03 is required. If Test 03 is unsuccessful, refer the fault code to this table for probable failing assemblies.

Table 6-13. TEST 03 TERMINATION CODES FOLLOWING TEST 01 FAULT CODE 48

	82	84	94	95	96	98	00
OPERATOR ACTION							
Ensure Tape is Not Thd'd			A				
Repeat Test			B	A			
FAILING ASSEMBLY							
Read/Write/Servo	1	1	1	1	2		1
Power Amplifier							
Read-Write Head							2
Take-Up Motor/Tach					1	1	
Supply Motor	2	2					

Refer to Table 6-14 if, after executing Operator Test 01, Fault Code 52 appears on the display. Table 6-3 indicates that Test 03 is required if operator actions A or B did not resolve the problem. If Test 03 is unsuccessful, refer the fault code displayed to this table for probable failing assemblies.

Table 6-14. TEST 03 TERMINATION CODES FOLLOWING TEST 01 FAULT CODE 52

	82	84	94	95	96	98	00
OPERATOR ACTION							
Ensure Tape is Not Thd'd			A				
Repeat Test			B	A			A
FAILING ASSEMBLY							
Read/Write/Servo	1	1	1	1	2		1
Power Amplifier							
Read-Write Head							
Take-Up Motor/Tach					1	1	
Supply Motor Assy	2	2					2
Supply Reel Hub Assy	3	3					3

Refer to Table 6-15 if, after executing Operator Test 01, Fault Code 30 or 31 appears on the display. Table 6-3 indicates that Test 03 is required. If Test 03 is unsuccessful, refer the fault code to this table for probable failing assemblies.

Table 6-15. TEST 03 TERMINATION CODES FOLLOWING TEST 01 FAULT CODE 30 OR 31

	82	84	94	95	96	98	00
OPERATOR ACTION							
Ensure Tape is Not Thd'd			A				
Repeat Test			B	A			
FAILING ASSEMBLY							
Read/Write/Servo	2	2	1	1	2		3
Power Amplifier	1						1
Read-Write Head							
Take-Up Motor/Tach		1			1	1	2
Pneumatic Pump							
Filter							
Pressure Regulator							
EOT/BOT Sensor							4

Refer to Table 6-16 if, after executing Operator Test 01, Fault Code 36 appears on the display. Table 6-3 indicates that Test 03 is required if operator actions A or B did not resolve the problem. If Test 03 is unsuccessful, refer the fault code displayed to this table for probable failing assemblies.

Table 6-16. TEST 03 TERMINATION CODES FOLLOWING TEST 01 FAULT CODE 36

	82	84	94	95	96	98	00
OPERATOR ACTION							
Ensure Tape is Not Thd'd			A				
Repeat Test			B	A			
FAILING ASSEMBLY							
Read/Write/Servo	2	2	1	1	2		3
Power Amplifier	1						1
Read-Write Head							
Take-Up Motor/Tach		1			1	1	2

ON-SITE PROCEDURES

Prior to initiating any diagnostic test, make a thorough visual inspection of the STU. Inspection of the head recording surface, cleaner blades, write enable reflective ring, hub assemblies, and proper seating of electrical connectors is always the first step in an organized troubleshooting procedure.

After the visual inspection, perform a functional check of the STU as follows (see Figure 6-1):

1. Perform SAM 1001. This procedure checks out the functional operation of the transport, including ancillary sensors, which the microprocessor cannot fault detect, without manual operation and visual feedback.

2. Refer to specific SAM fault code.

3. Perform any corrective action as directed by the SAM.

4. Verify operation of the transport by again performing Operator Diagnostic 01 or other verification tests, as directed by the SAM.

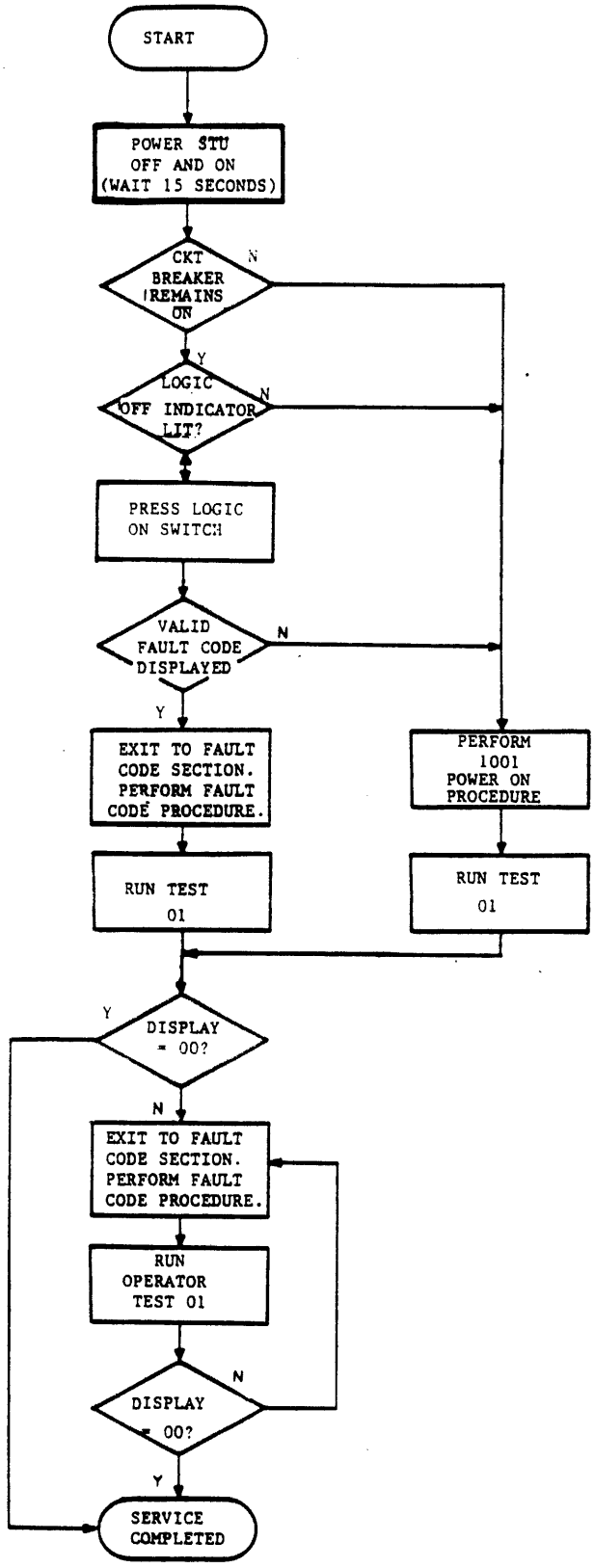

Figure 6-1. FLOWCHART OF ON-SITE TROUBLE ANALYSIS

Diagnostic Tests

The maintenance philosophy for trouble analysis of the STU is to minimize the time it takes to restore the STU to an on-line status, after a reported fault condition occurs. This is accomplished by providing two types of diagnostics as follows:

1. An operator test which is initiated prior to reporting the fault condition to the CE.

2. Customer engineer tests to be performed when you report to the site for corrective action.

Operator Diagnostics

The operator diagnostic is a functional test which directs the operator actions after a fault code appears. The operator test, procedure, and a fault code/corrective action table are contained in Volume I, 49768900. The fault code may indicate any one or more of the following types of fault conditions:

- Environment or Media Problems

  This type of problem requires that the operator clean the tape path area and/or use another known good quality tape.

- Operator Error Problem

  This type of problem is caused by conditions such as door open, write enable ring not present, or tape threaded incorrectly.

- Transport Circuit Problems

  These are fault conditions which require service by a customer engineer.

It is your responsibility to ensure that the operator performs Test 01, and to determine from the operator the fault code which appears, after running the operator diagnostic.

Because the operator diagnostics are an integral part of the trouble analysis procedures, subsequent paragraphs contain the procedure to initiate this diagnostic. The only difference between the procedure contained in the OPERATION section of Volume I, 49768900 and the following procedure, is an expanded feature to display a Sub-Fault Code for maintenance purposes.

Diagnostic Test Procedure

The operator diagnostic consists of one selectable test which runs for approximately 10 minutes, when a 2400 foot tape is used. Faults encountered during the test terminate the diagnostics and display a numerical code on the display panel. Any fault code should be logged by the operator and reported to you, if operator corrective actions do not resolve the problem. The operator diagnostic is initiated as follows:

- Transport Status

  1. Transport powered on (LOGIC ON indicator lit).

  2. Tape threaded through tape path and onto take-up reel, but not loaded (untensioned).

- Test Procedure

  1. Press TEST switch.

     a. DIAGNOSTIC indicator lights.

     b. Display panel indicates 01.

  2. Press EXECUTE switch.

     a. Test starts with display panel incrementing from 00, 11, 22 thru 99. Verify that all segments of the numerical display are functioning.

     b. Concurrent with step a. above, the following indicators are illuminated: FILE PROTECT, LOGIC ON, ON-LINE, RESET and DIAGNOSTICS.

     c. Test continues with various motion and read/write exercises for approximately 10 minutes.

The transport performs a REWIND/UNLOAD operation and 00 is indicated on the display panel, if the test runs to completion. If the test is unsuccessful, the test terminates and a fault code appears on the display panel. If the problem cannot be resolved through operator actions, as indicated in Table 6-3, the fault code is referenced directly to the corresponding SAM Table for corrective action.

When the SAM Tables are referenced for corrective action, a Sub-Fault Code interrogation may be required. With the fault code still indicated on the display panel, press and hold the CE switch. This action will cause the Sub-Fault Code to appear on the display.

If a SAM action item indicates Test 02 or Test 03 is to be performed, select test as follows:

NOTE

Tests 02 and 03 should not be used unless Test 01 directs their use. Tests 02 and 03 may fail if run without first running Test 01, and Fault Code 70 or 71 will appear.

1. Press RESET switch (resets fault code from Test 01 if still displayed).
2. Press TEST switch (01 is indicated on display).
3. Press STEP switch one time (numerical display steps from 01 to 02). If Test 03 is required, press STEP a second time to increment display from 02 to 03.
4. Press EXECUTE switch (test starts).

Tests 02 and 03 are very short tension and servo tests. Display 00 is indicated if test is successful. If test is not successful, refer the fault code to the original SAM table.

Customer Engineer Diagnostics

Perform the customer engineer diagnostics in conjunction with the requirements of the Structured Analysis Method (SAM) tables. When reporting to the site, obtain as much information from the operator and operating system as you can. Fault codes, the frequency at which they occur and, if possible, the operation in progress at that time, are all things which should be considered prior to execution of the diagnostics. If the fault is intermittent, the information received from the operator and operating system may be instrumental in directing you to the appropriate test to duplicate the condition under which the fault occurs.

If the fault condition is a hard error, or one which occurs frequently, start the troubleshooting procedure by executing Operator Diagnostic Test 01. This test is a lead-in to all fault codes and subsequent SAM Tables.

Initiate customer engineer tests as follows:

- Transport Status

  Status requirements of the transport are listed in the individual SAM troubleshooting tables.

- Test Procedure

  1. While pressing CE switch, press TEST switch.

     a. DIAGNOSTICS indicator lights.

     b. Display panel indicates 00.

  2. Press STEP switch.

     a. Display number increments each time STEP is pressed, or increments automatically if STEP is held pressed.

     b. To facilitate test number selection, use the following procedure. Example: Test 39 selection required.

        - Press STEP switch until 03 appears on display panel.

        - Press TEST switch and the 3-digit transfers to the left.

        - Display now indicates 30.

        - Press STEP switch again until display increments from 30 to 39.

     c. If test options (see test description subsection) are desired, press and hold CE switch, then press EXEC while CE is held pressed. Display will indicate 00. STEP switch is then pressed to select the desired option.

  3. Press EXECUTE switch.

     a. Test is initiated.

If the test runs to completion, the display panel indicates 00. If test fails, the display panel indicates the fault code.

Customer Engineer Special Load/Unload Procedures

While performing specific fault code procedures, you may be directed to perform a Test Load or Untensioned Unload procedure. A description of these special procedures follows.

- Test Load

  Follow this procedure if a reel of tape is suspected of not being wrapped properly and a tape re-wrap is necessary.

  1. Press TEST switch. DIAGNOSTIC LED lights and display indicates 01.

  2. Press LOAD switch. Forward tape motion is initiated to EOT. The take-up reel motor moves tape while the supply reel motor is completely untensioned. When EOT is detected, a normal rewind function is initiated (with tape tension) to BOT.

- Untensioned Unload

  Use this procedure to unwrap tape from the take-up reel onto the supply reel following a servo fault. The velocity servo (take-up reel motor) is completely untensioned while the supply reel moves tape in the reverse direction. Press UNLOAD switch while tape is untensioned (not loaded).

Sub-Fault Codes

The SAM tables may direct you to display the sub-fault code associated with the primary fault code. The sub-fault code is displayed by pressing the CE switch after the primary fault code appears on the digital indicators. The sub-fault code is displayed as long as the CE switch is held pressed.

STRUCTURED ANALYSIS METHOD (SAM) TABLES

After a fault code appears on the display panel, refer the fault code number directly to the corresponding number of the SAM which are listed numerically on subsequent pages. The basic SAM format (Figure 6-2) uses YES (Y) or NO (N) responses to sequential conditions to lead the customer engineer to appropriate corrective action.

When a fault can be caused by any one of several factors, the separate actions to correct each of these factors are numbered according to priority level with the action, having the highest probability of success, being listed as number 1. If several actions have the same probability of correcting the fault, the one that is easiest to perform (takes the least time) is listed as the first action.

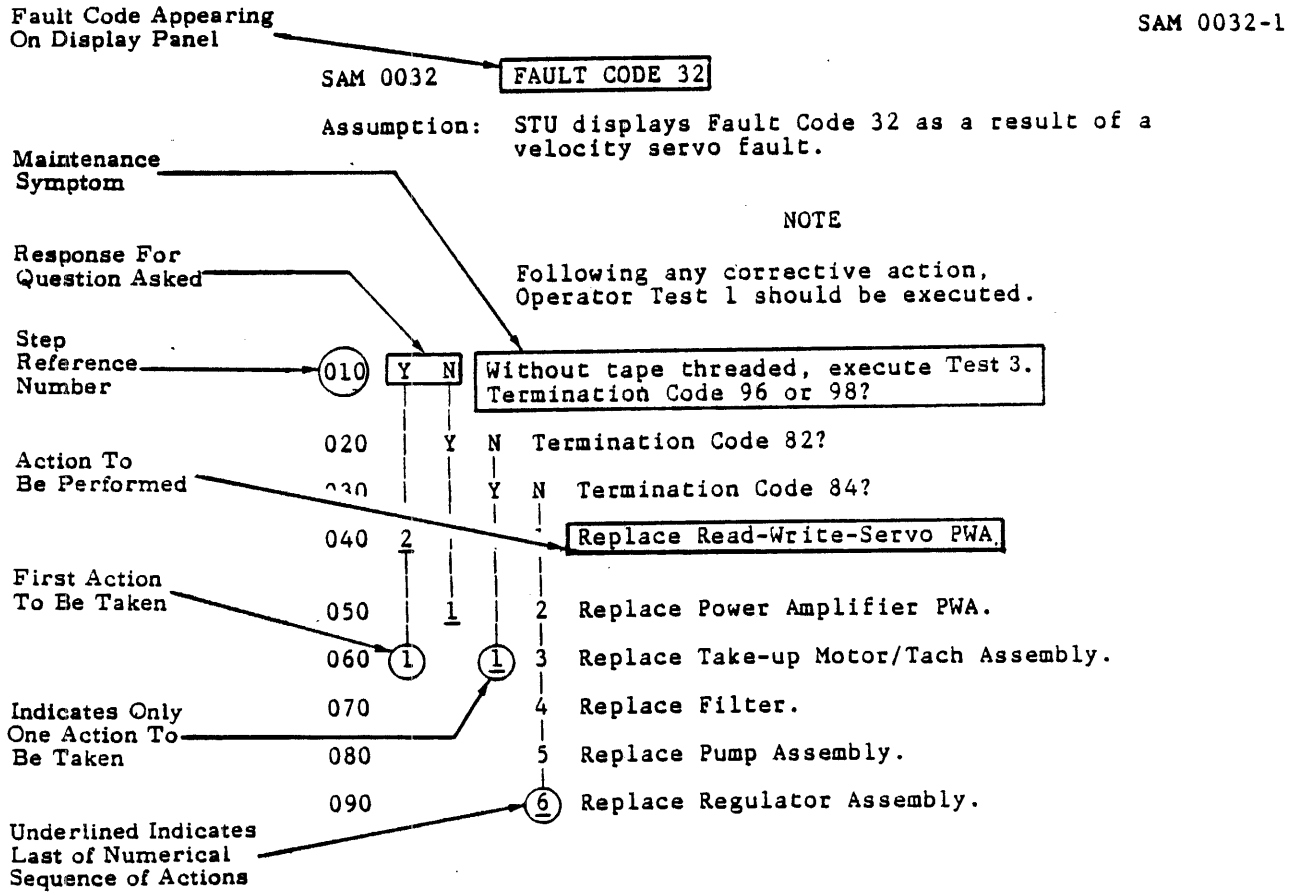

Figure 6-2. EXAMPLE OF STRUCTURED ANALYSIS METHOD (SAM) TABLE

SUB-FAULT CODE INTERPRETATION

The sub-fault code is displayed by pressing the CE switch after the primary fault code is indicated. Sub-fault codes are listed after the associated fault code.

Interpretation of the sub-fault numerical display is as follows:

1. Example 1 - Fault Code 25, Sub-Fault Code 64 (Figure 6-3)

   a. 40 - Take-Up sensor saw fault first
   b. 20 - Fault occurred on up ramp
   c. 04 - Fault occurred in reverse direction
   d. 00 - Fault occurred with 25 ips demanded
   e. 00 - Fault occurred while drive was moving at constant velocity, on ramp, on in stoplock for less than 1 second
   f. 00 - Fault occurred with pneumatic pump enabled

   64

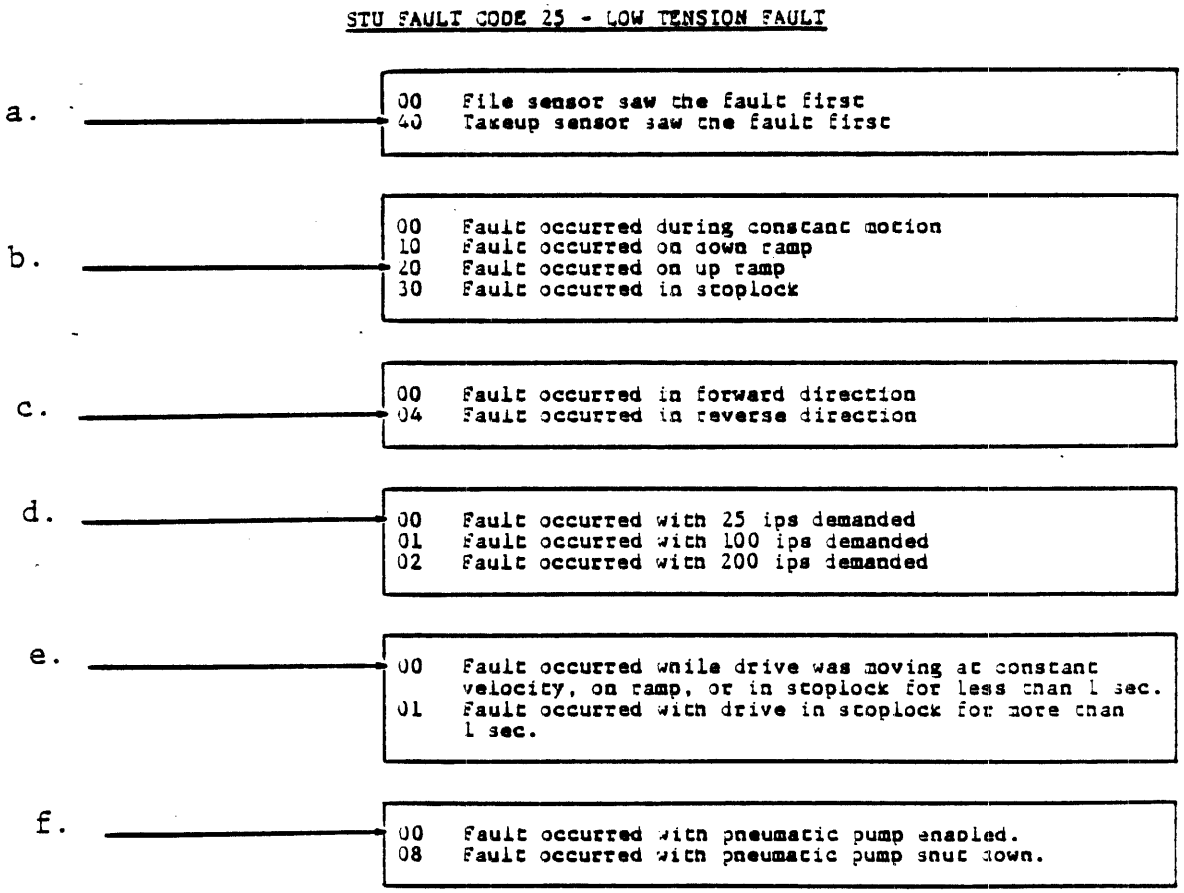

Figure 6-3. SUB-FAULT CODE INTERPRETATION - EXAMPLE 1

2. Example 2 - Fault Code 25, Sub-Fault Code 19 (Figure 6-4)

a. 00 - File sensor saw fault first
b. 10 - Fault occurred on down ramp
c. 00 - Fault occurred in forward direction
d. 01 - Fault occurred with 100 ips demanded
e. 00 - Fault occurred while drive was moving at constant velocity, on ramp, or in stoplock for less than 1 second
f. 08 - Fault occurred with pneumatic pump shut down

19

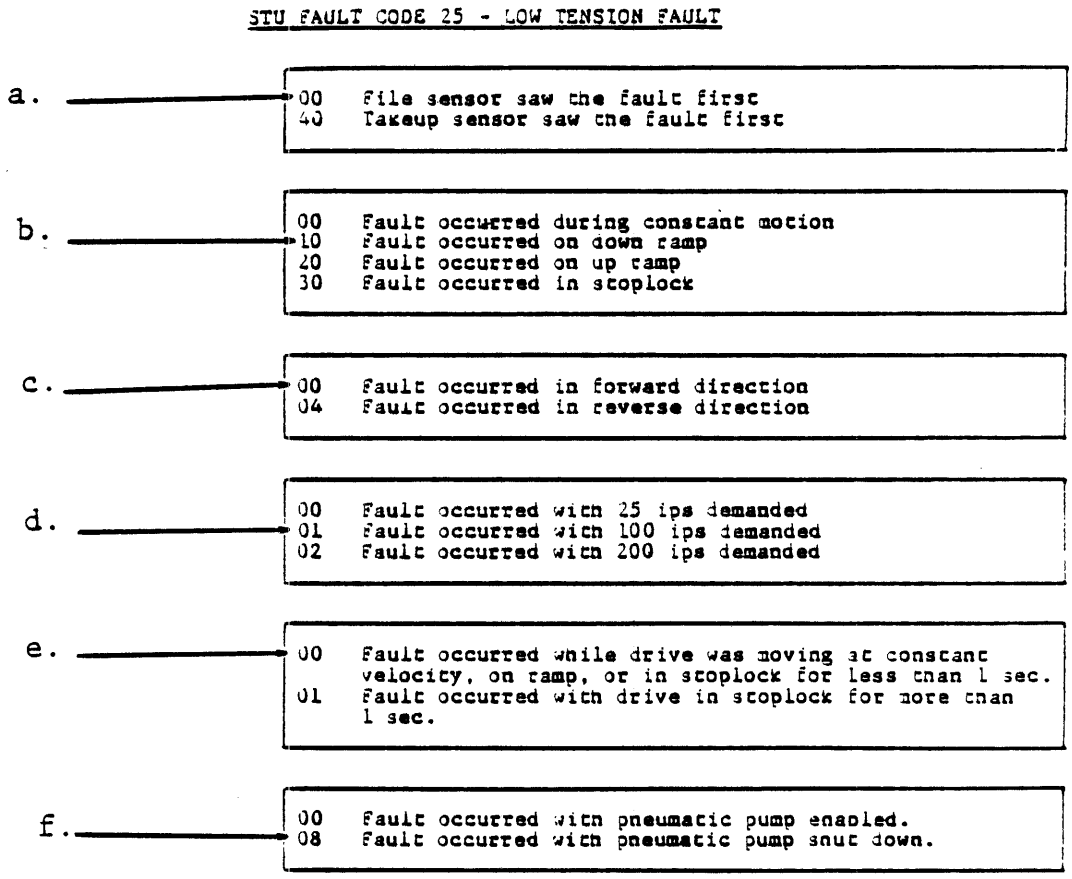

Figure 6-4. SUB-FAULT CODE INTERPRETATION - EXAMPLE 2

SAM CHECKOUT	DESCRIPTION
1001	Power-On 1
1002	Power-On 2
1003	Power-On 3

SAM FAULT CODE	DESCRIPTION
01	Read envelope fault
02	Read amplitude tolerance fault
03	ID fault
04	Low speed write errors
05	Low speed read errors
06	High speed write errors
07	High speed read errors
08	Noise in IBG
09	Reserved for future use
10	Operator door open
11	Absence of tape
12	Load fault
13	Tape threaded incorrectly
14	BOT location fault
15	Load/Unload aborted by operator
16	Diagnostic tape is write protected
17	Ran off end of tape
18	Tape already loaded
19	Reserved for future use
20	File tension sensor fault
21	Take-up tension sensor fault
22	Unable to tension tape
23	Unable to re-establish tension
24	High tension fault
25	Low tension fault
26	Servo fault
27	No coarse tachs
28	Tension recovery problem
29	Absence of tape

SAM FAULT CODE	DESCRIPTION
30	Up ramp fault
31	Down ramp fault
32	Stoplock over-run
33	Tape positioning fault
34	BOT positioning fault
35	Positioning fault
36	Speed fault
37	Pump power-up
38	
39	
40	
41	
42	
43	
44	
45	
46	
47	Velocity correction fault
48	Unload fault
49	
50	Irrecoverable device health check fault
51	Recoverable device health check fault
52	Speed calculation fault
53	Arithmetic error
54	Erase/Write current fault
55	Load/Rewind timeout fault
56	Processor communication fault
57	Device illogical fault
58	Recoverable formatter health check fault
59	Irrecoverable formatter health check fault
60	Irrecoverable operator panel fault
61	Recoverable operator panel fault

This Power-On/Installation SAM is for the isolation of AC power faults.

Assumption: The STU's AC circuit breaker is turned off and the STU is plugged into a "live" AC supply of the correct voltage.

NOTE

Following any corrective action, reconnect any assemblies that may have been disconnected and restart this SAM with circuit breaker turned off.

010	Y	N					Turn circuit breaker ON. Does circuit breaker remain on?
020		Y	N				Disconnect cooling fan cable from power supply. Turn circuit breakerON. Does circuit breaker remain on?
030		2	1				Replace Power Supply Assembly.
040		1					Replace Cooling Fan Assembly.
050	Y	N					Is the LOGIC OFF LED on operator panel illuminated?
060		Y	N				Is the LOGIC ON LED on operator panel illuminated?
070			Y	N			Press LOGIC ON switch. Does LOGIC ON LED illuminate and stay illuminated?
080				Y	N		Is cooling fan operating?
090					1		Ensure AC supply cable is plugged into Power Supply Assembly.
100					2		Ensure that AC supplied to STU is "live" and the correct voltage for the unit.
110		1	2	3	3		Replace Power Supply Assembly.
120				1			Ensure operator panel cable is plugged into Formatter-Control PWA.
	2A	2B	2C	2D			

	A	B	C	D	
	1	1	1	1	
130				2	Ensure logic cable between power supply and Formatter-Control PWA firmly connected at each end.
140		2	1	4	Replace Operator Panel Assembly.
150	Y	N			Is cooling fan operating?
160		1			Replace Cooling Fan Assembly.
170		2			Replace Power Supply Assembly.
180	1				Go to SAM 1002.

This Power-On SAM is for the isolation of DC power faults.

Assumption: The STU's AC circuit breaker is turned on, the OFF LED is illuminated and the cooling fan is operating.

NOTE

Following any corrective action, reconnect any assemblies that may have been disconnected and restart this SAM.

010	Y	N	Press LOGIC ON switch of operator panel. Does LOGIC ON LED illuminate and stay illuminated?
015		1	Ensure DC cable harness is firmly connected to the underside of the Power Supply.
020		Y	N Disconnect DC supply cable from Power Amplifier PWA. Press LOGIC ON switch. Does LOGIC ON LED illuminate and stay illuminated?
030			Y N Reconnect DC supply cable to Power Amplifier PWA. Disconnect DC supply cable from Formatter-Control PWA and Read-Write-Servo PWA. Press LOGIC ON switch. Does LOGIC ON LED illuminate and stay illuminated?
040			1 Replace Power Supply Assembly.
050			2 Replace Operator Panel Assembly.
060			Y N Remove Read-Write-Servo PWA and reconnect DC supply cable to Formatter-Control PWA. Press LOGIC ON switch. Does LOGIC ON LED illuminate and stay illuminated?
070			1 Replace Formatter-Control PWA.
080		2	2 2 Replace Power Supply Assembly.
090			1 Replace Read-Write-Servo PWA.
100		1	Replace Power Amplifier PWA.
110	Y	N	Is the OFF LED illuminated?
	2 A	2 B	

	A	B				
	1	1				
120		Y	N			Is the two-digit display blank and FILE PROT LED illuminated, and RESET, ON-LINE andDIAGNOSTICS LEDs all extinguished?
130			Y	N		Are the RESET, ON-LINE and DIAGNOSTICS LEDs all illuminated?
140				Y	N	Is the display blank?
150					Y	N Wait for 15 seconds. Is RESET LED extinguished?
160						Y N Is Fault Code 50 or 51 or 56 or 58 or 59 or 60 or 61 displayed?
170				1		1 Replace Formatter-Control PWA.
180						1 Go to the SAM for the displayed fault code.
190				Y	N	Is FILE PROT LED illuminated?
200	2				1	Replace Operator Panel Assembly.
210					2	Replace Read-Write-Servo PWA.
220			1	1	3	Replace Formatter-Control PWA.
230	1		2			Replace Power Supply Assembly.
240		1				Go to SAM 1003.

This SAM is for the detection/isolation of operational faults.

Assumption: The STU is powered on with the LOGIC OFF LED extinguished, the LOGIC ON LED illuminated, the FILE PROT LED illuminated and the display blank.

NOTE

Following any corrective action, this SAM should be restarted.

010	Y	N	Thread a write enabled tape and close operator door. Press TEST switch. Does DIAGNOSTICS LED illuminate?
020		1	Replace Operator Panel Assembly.
030		2	Replace Formatter-Control PWA.
040	Y	N	Is 01 displayed?
050		1	Replace Operator Panel Assembly.
060		2	Replace Formatter-Control PWA.
070	Y	N	Press EXECUTE switch and observe LEDs and display of operator panel. Does display sequence from 00 to 11 to 22 to 99 without any missing segments? And while display is sequencing, are ON-LINE and RESET LEDs both illuminated?
080		1	Replace Operator Panel Assembly.
090		2	Replace Formatter-Control PWA.
100	Y	N	Does Operator Test 1 terminate displaying 00?
110		1	Go to the SAM for the displayed fault code.
120	Y	N	Is the BOT LED extinguished?
130		1	Replace Formatter-Control PWA.
140		2	Replace Operator Panel Assembly.
150	Y	N	Press the RESET switch. Is the display blank?
	2		
	A	B	

	A	B	
	1	1	
160		1	Replace Operator Panel Assembly.
170		2	Replace Formatter-Control PWA.
180	Y	N	Thread tape and close operator door. Press LOAD switch. Does STU load tape?
190		Y	N Fault Code displayed?
200			1 Replace Operator Panel Assembly.
210			2 Replace Formatter-Control PWA.
220		1	Go to the SAM for displayed fault code.
230	Y	N	Is BOT LED illuminated?
240		1	Replace Operator Panel Assembly.
250		2	Replace Formatter-Control PWA.
260	Y	N	Is FILE PROT LED extinguished?
270		1	Replace Operator Panel Assembly
280		2	Replace Formatter-Control PWA.
290	Y	N	Press ON-LINE switch. Does ON-LINE LED illuminate?
300		1	Replace Operator Panel Assembly.
310		2	Replace Formatter-Control PWA.
320	Y	N	Press RESET switch followed by UNLOAD switch. Does STU unload tape?
330		Y	N Fault Code displayed?
340			1 Replace Operator Panel Assembly.
350			2 Replace Formatter-Control PWA.
360		1	Go to the SAM for the displayed fault code.
	3		
	A		

	A		
	2		
370	Y	N	While pressing CE switch, press TEST switch. Is 00 displayed?
380		1	Replace Operator Panel Assembly.
390		2	Replace Formatter-Control PWA.
400	Y	N	Press STEP switch. Is 01 displayed?
410		1	Replace Operator Panel Assembly.
420		2	Replace Formatter-Control PWA.
430	Y	N	Press RESET switch. Remove write permit ring from reel and rethread tape. With operator door open, press LOAD switch. Is Fault Code 10 displayed?
440		1	Replace Door Switch Assembly.
450		2	Replace Read-Write-Servo PWA.
460	Y	N	Press RESET switch and close operator door. Press LOAD switch. Does the STU load tape successfully?
470		1	Go to the SAM for the displayed fault.
480	Y	N	Is FILE PROT LED illuminated?
490		1	Replace File Protect Sensor Assembly.
500		2	Replace Read-Write-Servo PWA.
510		3	Replace Supply Hub Assembly.
520	1		Unload tape; the SAM is completed without finding any faults.

Assumption: STU displays Fault Code 01 as a result of failing to detect a read signal during a read amplitude checking diagnostic test.

The most probable cause of this fault is a dirty read-write head. Another possible cause is damaged tape.

NOTE

Following any corrective action, Operator Test 1 should be executed.

010	1	Clean read-write head, tape cleaner and tape guides.
020	2	Change tape to a known good write enabled tape.
030	3	Ensure that cables between read-write head and Read-Write-Servo PWA are correctly connected.
040	4	Ensure that write current selection resistors (R224 and R225) are correctly installed in Read-Write-Servo PWA.
050	5	Replace Read-Write Head Assembly.
060	6	Replace Read-Write-Servo PWA (See Note 3 on page 6-130).
070	7	Replace Formatter-Control PWA.

STU FAULT CODE 01 - READ ENVELOPE FAULT

00	Envelope not detected during read amplitude check (EGC test)

Assumption: STU displays Fault Code 02 as a result of detecting a read amplitude out of range during a read amplitude checking diagnostic test.

The most probable cause of this fault is a dirty read-write head. Another possible cause is damaged tape.

NOTE

Following any corrective action, Operator Test 1 should be executed.

010	1	Clean read-write head, tape cleaner and tape guides.
020	2	Change tape to a known good write enabled tape.
030	3	Ensure that cables between read-write head and Read-Write-Servo PWA are correctly connected.
040	4	Ensure that write current selection resistors (R224 and R225) are correctly installed in Read-Write-Servo PWA.
050	5	Replace Read-Write Head Assembly.
060	6	Replace Read-Write-Servo PWA (See Note 3 on page 6-130).
070	7	Replace Formatter-Control PWA.

STU FAULT CODE 02 - READ AMPLITUDE TOLERANCE FAULT

00	Read amplitude outside range 1.5 volts $\pm$ 0.8 volts (i.e. difference between EGC gain and gain in backup memory would cause an amplitude difference greater than 0.8 volts)

Assumption: STU displays Fault Code 03 during Operator Test 1 due to a failure to read or write the PE identification burst at load point.

The probable cause of this fault is damaged tape. The tape should be free of defects within the first six inches of tape after the BOT reflective marker.

NOTE

Following any corrective action, Operator Test 1 should be executed.

010	1	Clean read-write head, tape cleaner and tape guides.
020	2	Change tape to a known good write enabled tape.
030	3	Ensure that Formatter-Control PWA and Read-Write-Servo PWA are firmly connected.
040	4	Replace Formatter-Control PWA.
060	5	Replace Read-Write-Servo PWA (See Note 3 on page 6-130).
070	6	Replace Read-Write Head.

STU FAULT CODE 03 - ID FAULT

00	Unable to read or write PE Identification Burst

Assumption: STU displays Fault Code 04 during Operator Test 1 due to a failure to write a block within five attempts at low speed.

The probable causes of this fault are dirty head and damaged tape.

NOTE

Following any corrective action, Operator Test 1 should be executed.

010	1					Clean read-write head, tape cleaner and tape guides.
020	2					Change tape to a known good write enabled tape.
030	3					Ensure that Formatter-Control PWA and Read-Write-Servo PWA are firmly connected.
040	Y	N				Without tape threaded, execute Test 3. Termination Code 98?
050		Y	N			Termination Code 96?
060			Y	N		Termination Code 82?
070				Y	N	Termination Code 84?
080	1	2		2	1	Replace Read-Write-Servo PWA (See Note 3 on page 6-130).
090					2	Replace Formatter-Control PWA.
100					3	Replace Read-Write Head Assembly.
110	2	1		1		Replace Take-Up Motor/Tach Assembly.
120			1			Replace Power Amplifier PWA.

STU FAULT CODE 04 - LOW SPEED WRITE ERRORS

00	Unable to write a block at low speed within 5 attempts
37	Filemark detection error
38	More than 16 write error recoveries performed while writing to EOT at low speed during CE test 21

Assumption: STU displays Fault Code 05 during Operator Test 1 due to a failure to read a block in forward or reverse direction at low speed.

The probable causes of this fault are dirty head and damaged tape.

NOTE

Following any corrective action, Operator Test 1 should be executed.

010	1	Clean read-write head, tape cleaner and tape guides.
020	2	Change tape to a known good write enabled tape.
030	3	Replace Read-Write-Servo PWA (See Note 3 on page 6-130)
040	4	Replace Formatter-Control PWA.
050	5	Replace Read-Write Head.

STU FAULT CODE 05 - LOW SPEED READ ERROR

00	Data error detected while reading at low speed (No error recovery performed)
36	Short IBG detected
37	Filemark detection error

Assumption: STU displays Fault Code 06 during Operator Test 1 due to a failure to write a block within 5 attempts at high speed, or due to too many write errors while writing to EOT.

The probable causes of this fault are dirty head and damaged tape.

NOTE

Following any corrective action, Operator Test 1 should be executed.

010	1					Clean read-write head, tape cleaner and tape guides.
020	2					Change tape to a known good write enabled tape.
030	3					Ensure that Formatter-Control PWA and Read-Write-Servo PWA are firmly connected.
040	Y	N				Without tape threaded, execute Test 3. Termination Code 98?
050		Y	N			Termination Code 96?
060			Y	N		Termination Code 82?
070				Y	N	Termination Code 84?
080	1	2		2	1	Replace Read-Write-Servo PWA (See Note 3 on page 6-130).
090					2	Replace Formatter-Control PWA.
100					3	Replace Read-Write Head Assembly.
110	2	1		1		Replace Take-Up Motor/Tach Assembly.
120			1			Replace Power Amplifier Assembly.

STU FAULT CODE 06 - HIGH SPEED WRITE ERROR

00	Unable to write a block at high speed within 5 attempts
37	File mark detection error
38	More than 16 write error recoveries performed while writing to EOT at high speed during operator test 1 or CE test 23

Assumption: STU displays Fault Code 07 during Operator Test 1 due to a failure to read a block at high speed.

The probable causes of this fault are dirty head and damaged tape.

NOTE

Following any corrective action, Operator Test 1 should be executed.

010	1	Clean read-write head, tape cleaner and tape guides.
020	2	Change tape to a known good write enabled tape.
030	3	Replace Read-Write-Servo PWA (See Note 3 on page 6-130).
040	4	Replace Formatter-Control PWA.
050	5	Replace Read-Write Head.

STU FAULT CODE 07 - HIGH SPEED READ ERROR

00	Data error detected while reading at high speed (No error recovery performed)
36	Short IBG detected
37	File mark detection error

Assumption: STU displays Fault Code 08 during Operator Test 1 due to detection of noise during IBG.

The probable causes of this fault are dirty head and damaged tape.

NOTE

Following any corrective action, Operator Test 1 should be executed.

010 1 Clean read-write head, tape cleaner and tape guides.

020 2 Change tape to a known good write enabled tape.

030 3 Replace Read-Write-Servo PWA (See Note 3 on page 6-130).

040 4 Replace Formatter-Control PWA.

050 5 Replace Read-Write Head.

STU FAULT CODE 08 - NOISE IN IBG

00	Noise detected during IBG or while erasing

Assumption: STU displays Fault Code 10 as a result of detecting an open operator door condition.

The most probable cause of this fault is the operator door being open. During any normal operation, including execution of diagnostic tests that require reel motion, the door must be closed.

NOTE

Following any corrective action, the door should be closed and Operator Test 1 should be executed.

010	1		Ensure that all interlock switch leads are unbroken and are firmly connected to the door switch assembly.
020	2		Ensure that all cables are firmly connected to the Read-Write-Servo PWA.
030	Y	N	Using a DVM with negative terminal connected to TP8 of Read-Write-Servo PWA, measure voltages on outermost terminals of door switch while the operator door is closed. Is voltage difference greater than 0.2 volt?
040		Y	N Repeat previous operation for innermost terminals. Is voltage difference greater than 0.2 volt?
050			1 Replace Read-Write-Servo PWA (See Note 3 on page 6-130).
060	1	1	Ensure Door Switch Plunger on operator door lines up with door switchand will depress switch when door is closed.
070	2	2	Replace Door Switch Assembly.

STU FAULT CODE 10 - OPERATOR DOOR OPEN

01	Door open on load
02	Door open after tensioning
03	Door opened during unload
04	Door open on untensioned unload
05	Door opened during untensioned unload
06	Door opened during retensioned load unload
07	Door open on diagnostic test

Assumption: STU displays Fault Code 11 as a result of detecting an absence of tape condition during a load operation, or a diagnostic test that requires tape threaded.

The most probable cause of this fault is that tape is not threaded. Another possible cause is that tape is threaded with tape that has oxide removed.

NOTE

Following any corrective action, a tape load operation should be performed.

010	Y	N	Disconnect cable from BOT/EOT Sensor Assembly. With operator door closed, press Load/Rewind switch. Is Fault Code 11 reported?
020		1	Replace BOT/EOT Sensor Assembly.
030	1	2	Replace Read-Write-Servo PWA (See Note 3, page 6-130).

STU FAULT CODE 11 - ABSENCE OF TAPE

01	Absence of tape on load
02	Absence of tape on operator test 2

Assumption: STU displays Fault Code 12 as a result of detecting a hub unlatched condition.

The most probable cause of this fault is that supply hub was not latched after mounting a new reel of tape.

A possible cause is that tape being loaded has been subjected to extreme temperature or humidity changes. These tapes can sometimes be recognized by shaking the full reel and hearing tape pack move relative to reel. Also, while loading tape, it will be seen that hub and reel rotate counterclockwise while pack of tape rotates clockwise. To continue using these tapes, the pack requires to be rewrapped at correct tension. This is achieved by performing a test load operation which wraps all tape onto take-up reel, and then returns tape, correctly tensioned, to the supply reel.

Other possible causes of Fault Code 12 are:

1. Loading a tape while in tape trailer.
2. Loading a tape with a short leader or a missing BOT marker.
3. Loading a tape with EOT/BOT sensor cable disconnected.

NOTE

Following any corrective action, a tape load operation should be performed.

010 1 Remove supply reel from supply hub and clean hub pads.

020 Y N Remount reel and latch hub. While holding hub, can reel be easily rotated in either direction?

030 1 Replace Read-Write-Servo PWA (See Note 3, page 6-130).

040 2 Replace BOT/EOT Sensor Assembly.

3 Replace Supply Motor Assembly

050 1 Replace Supply Reel Hub Assembly.

STU FAULT CODE 12 - LOAD FAULT

01	Tension fault while loading

Assumption: STU displays Fault Code 13 during a load operation as a result of not establishing tension within 10 seconds.

The most probable cause of this fault is that tape has been threaded with a long loop, or tape has not been tightly wrapped on take-up hub.

NOTE

Following any corrective action, a tape load operation should be performed.

010	Y	N	Execute CE Test 43. Does pump fail to start?
020		Y	N Does air pressure lift tape off air bearings?
030			1 Replace Filter.
040	1		2 Replace Pump Assembly.
050			3 Replace Regulator Assembly.
060	Y	N	Unthread tape. Push LOAD switch. Fault Code 11 is displayed?
070	1		Replace BOT/EOT assembly.
080	2	1	Replace Read-Write-Servo PWA. (See Note 3, page 6-130)
090	3		Replace Power Supply Assembly.

STU FAULT CODE 13 - TAPE THREADED INCORRECTLY

01	Tension not detected on both sensors within 10 secs.
02	Second course tach not detected within 10 secs.

Assumption: The most probable cause of this fault is that tape leader is too long. ANSI Standard X3.39 specifies that BOT reflective marker should be placed from 14 feet to 18 feet from physical beginning of tape.

NOTE

Following any corrective action, a tape load operation followed by an unload operation should be performed.

010	1	Mount a new reel of tape and retry load/unload sequence.
020	2	Replace BOT/EOT Sensor Assembly.
030	3	Replace Read-Write-Servo PWA (See Note 3 on page 6-130).

STU FAULT CODE 14 - BOT LOCATION FAULT

01	BLTL.loading.not seen BOT
02	AOT.loading.not seen BOT
03	Did not get BLTL within prescribed period during unload

Assumption: STU displays Fault Code 15 as a result of load or unload operation being aborted.

The most probable cause of this fault is that operator pressed Reset Switch during load or unload operation.

NOTE

Following any corrective action, a tape load operation followed by an unload operation should be performed.

010 1 Replace Operator Panel Assembly.

020 2 Replace Read-Write-Servo PWA (See Note 3 on page 6-130).

030 3 Replace Formatter-Control PWA.

STU FAULT CODE 15 - LOAD/UNLOAD ABORTED BY OPERATOR

01	Reset pressed during load
02	Reset pressed during unload

Assumption: STU displays Fault Code 16 on execution of a Read/Write Diagnostic Test with a write protected scratch tape.

The most probable cause of this fault is that the scratch tape in use does not have a write permit ring installed.

NOTE

Following any corrective action, Operator Test 1 should be executed.

010	1		Remove write enable sensor cover plate and ensure connector is correctly connected to sensor.
020	Y	N	Does write permit ring push reflective ring part of Supply Reel Hub Assembly in line with write enable sensor?
030		1	Replace Supply Reel Hub Assembly.
040	1		Replace Write Enable Sensor Assembly.
050	2		Replace Read-Write-Servo PWA (See Note 3 on page 6-130).
060	3		Replace Formatter Control PWA.

STU FAULT CODE 16 - DIAGNOSTIC TAPE IS WRITE PROTECTED

00	Attempted to execute a read/write diagnostic with write protected tape

Assumption: STU displays Fault Code 17 as a result of running off the physical end of tape.

The most probable cause of this fault is that the system continued issuing Forward Read/Write commands after EOT has been sensed. A possible cause is that trailer is too short (ANSI Standard X3.39 specifies trailer should be longer than 25 feet.).

NOTE

Following any corrective action, Operator Test 1 should be executed.

010	Y	N	Load tape and execute CE Test 44. Does tape stop within trailer?
	2	1	
020			Replace Read-Write-Servo PWA (See Note 3, page 6-130).
	1	2	
030			Replace Formatter-Control PWA.

STU FAULT CODE 17 - RAN OFF END OF TAPE

01	AOT.trailer.forward
02	BLTL.trailer.forward
03	BOT.trailer.reverse

Assumption: STU displays Fault Code 18 as a result of attempting to execute a Diagnostic Test which requires tape to be untensioned.

The most probable cause of this fault is that tape is already loaded while attempting to execute test that requires tape to be untensioned.

NOTE

Following any corrective action, Operator Test 1 should be executed.

010 1 Replace Formatter-Control PWA.

020 2 Replace Read-Write-Servo PWA (See Note 3 on page 6-130).

STU FAULT CODE 18 - TAPE ALREADY LOADED

00	Attempted to execute Operator Test 1 with tape already loaded

Assumption: STU displays Fault Code 20 as a result of a file tension fault.

NOTE

Following any corrective action, a tape load operation or Operator Test 1 should be executed.

010	1				Ensure that cable between Upper Air Bearing Assembly and Read-Write-Servo PWA is correctly connected.
020	Y	N			Sub-Fault Code 05?
030		Y	N		Sub-Fault Code 02 or 04?
040			Y	N	Disconnect cable between Upper Air Bearing Assembly and Read-Write-Servo PWA at Read-Write-Servo PWA Assembly. Try to load a tape. Fault Code 20, Sub-Fault Code 05?
050	1		1		Replace Upper Air Bearing Assembly. Reconnect cable.
060	2	1	2	1	Replace Read-Write-Servo PWA (See Note 3 on page 6-130). Reconnect cable.

STU FAULT CODE 20 - FILE TENSION SENSOR FAULT

00	Offset comparator is low with min. offset
01	Offset comparator is high with max. offset
02	2 oz. detected with no tension
04	Upper tension detected with no tension
05	Did not reach 2 oz. within 100 ms of takeup sensor detecting 2 oz. during load.

Assumption: STU displays Fault Code 21 as a result of a take-up tension fault.

NOTE

Following any corrective action, a tape load operation or Operator Test 1 should be executed.

010	1				Ensure that cable between Lower Air Bearing Assembly and Read-Write-Servo PWA is correctly connected.
020	Y	N			Sub-Fault Code 05?
030		Y	N		Sub-Fault Code 02 or 03 or 04?
040			Y	N	Disconnect cable between Lower Air Bearing Assembly and Read-Write-Servo PWA at Read-Write-Servo PWA Assembly. Try to load a tape. Fault Code 21, Sub-Fault Code 05?
050	1		1		Replace Lower Air Bearing Assembly. Reconnect cable.
060	2	1	2	1	Replace Read-Write-Servo PWA (See Note 3 on page 6-130). Reconnect cable.

STU FAULT CODE 21 - TAKEUP TENSION SENSOR FAULT

00	Offset comparator is low with min. offset
01	Offset comparator is high with max. offset
02	2 oz detected with no tension
03	9 oz. detected with no tension
04	Upper tension detected with no tension
05	Did not reach 2 oz. within 100 ms of file sensor detecting 2 oz during load

Assumption: STU displays Fault Code 22 as a result of being unable to maintain tape tension during a tape load operation.

The most probable cause of this fault is that the tape being loaded has been subjected to extreme temperature or humidity changes. These tapes can sometimes be recognized by shaking the full reel and hearing the tape pack move relative to the reel. To continue using these tapes, the pack requires to be re-wrapped at the correct tension. At the time of reporting the fault, the tape may have been removed from the supply reel. Recovery for this case will be to re-wrap the tape onto the file reel (to the BOT side of the EOT marker) and perform a normal load operation. If tape was not removed from the supply reel, a test load operation should be performed to remove the tape.

NOTE

A tape load operation should be performed following any corrective action. During load operation, file reel should be observed for pack slip.

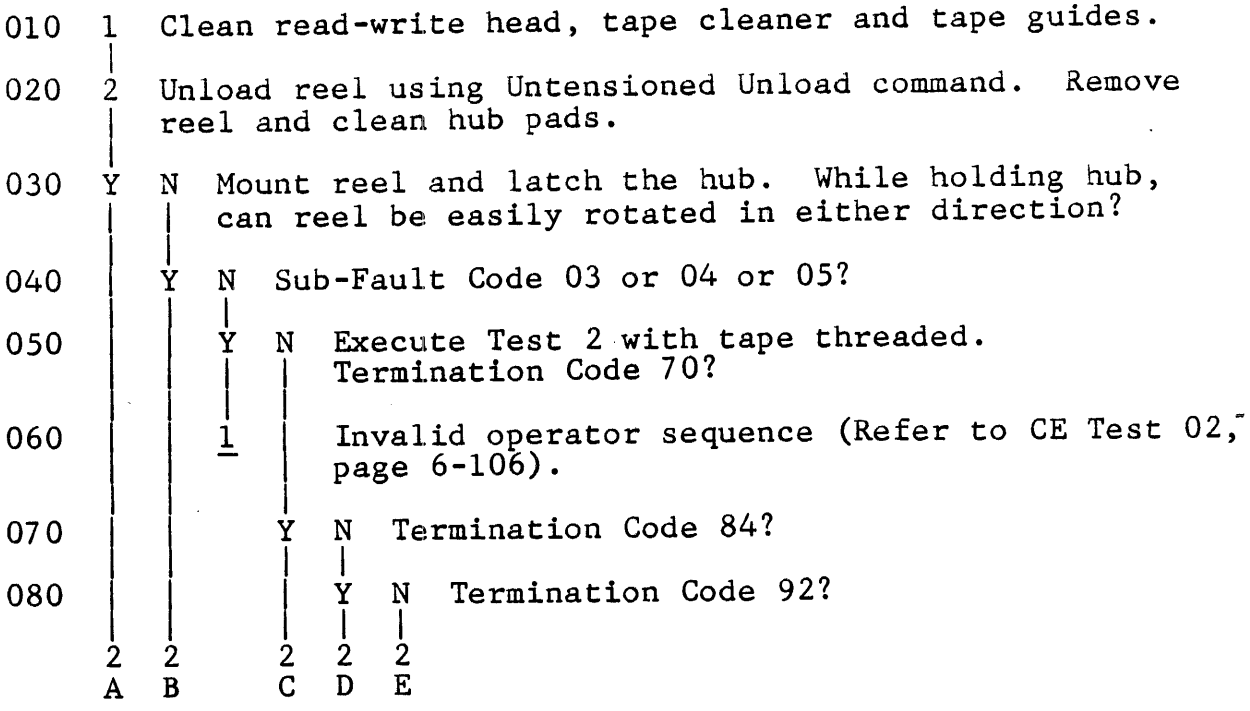

	A	B	C	D	E		
	1	1	1	1	1		
090					Y	N	Execute Test 3 without tape threaded. Termination Code 96 or 98?
100		1	1	2	2	1	Replace Read-Write-Servo PWA (See Note on page 6-130).
110						2	Replace Power Amplifier PWA.
120				1			Replace Supply Motor/Tach Assembly.
130			2		1		Replace Take-Up Motor/Tach Assembly.
140	1	Replace Supply Hub Assembly.					

STU FAULT CODE 22 - UNABLE TO TENSION TAPE

01	Unable to successfully maintain tension during load (Fault is reported after tape is unloaded off EOT).
02	Unable to successfully maintain tension during load (Fault is reported with tape still in the tape path after failing to find AOT within 30 seconds)
03	Tape slipping on file reel while accelerating during tension recovery
04	Tape slipping on file reel while decelerating during tension recovery
05	Tape slipping on file reel while decelerating during tension recovery/test load

Assumption: STU displays Fault Code 23 as a result of being unable to re-establish tape tension during a tape load operation.

The most probable cause of this fault is that the tape being loaded has been subjected to extreme temperature or humidity changes. These tapes can sometimes be recognized by shaking the full reel and hearing the tape pack move relative to the reel. To continue using these tapes, the pack requires to be re-wrapped at the correct tension. At the time of reporting the fault, all the tape may have been removed from the supply reel. Recovery for this case will be to re-wrap the tape onto the file reel (to the BOT side of the EOT label) and perform a normal load operation. If tape was not removed from supply reel, a test load operation should be performed to remove the tape.

NOTE

A tape load operation should be performed following any corrective action. During load operation, file reel should be observed for pack slip.

010	1	Ensure that the cable is correctly connected to BOT/EOT Sensor Assembly.
020	2	Replace Read-Write-Servo PWA (See Note 3 on page 6-130).
030	3	Replace Supply Motor Assembly.

STU FAULT CODE 23 - UNABLE TO RE-ESTABLISH TENSION

01	Unable to establish tension during test load
02	Unable to maintain tension after stopping tape following a test load

Assumption: STU displays Fault Code 24 as a result of a high tension detected on both air bearings.

NOTE

Following any corrective action, Operator Test 1 should be executed.

010	Y	N		Execute Test 2 with tape threaded. Termination Code 70?
020	1			Invalid operator sequence (Refer to CE Test 02 on page 6-106).
030		Y	N	Termination Code 81 or 82?
040			Y	N Termination Code 73 or 74 or 92 or 98?
050			3	1 Replace Read-Write-Servo PWA (See Note 3 on page 6-130).
060		1	2	2 Replace Power Amplifier PWA.
070			1	Replace Supply Motor/Tach Assembly.

STU FAULT CODE 24 - HIGH TENSION FAULT

00	Fault occurred during constant velocity motion
10	Fault occurred on down ramp
20	Fault occurred on up ramp
30	Fault occurred in stoplock

00	Fault occurred in forward direction
04	Fault occurred in reverse direction

STU FAULT CODE 24 (Cont'd)

00	Fault occurred with 25 ips demanded
01	Fault occurred with 100 ips demanded
02	Fault occurred with 200 ips demanded

00	Fault occurred while drive was moving at constant velocity, on ramp, or in stoplock for less than 1 sec.
01	Fault occurred with drive in stoplock for more than 1 sec.

00	Fault occurred with pneumatic pump enabled.
08	Fault occurred with pneumatic pump shut down.

Assumption: STU displays Fault Code 25 as a result of a low tension condition being detected on one of the air bearings.

The most probable cause of this fault is damaged tape. Should tape be torn, then the fault can occur as tape passes over air bearing. Another cause, with stiction tapes, is when tape sticks to read-write head.

NOTE

Following any corrective action, Operator Test 1 should be executed.

010 1 Clean read-write head, tape cleaner and tape guides.

020 2 Change tape to a known good, write enabled scratch tape.

030 3 Unload reel using Untensioned Unload command. Remove reel and clean hub pads.

040 Y N Remount reel and latch hub. While holding hub, can reel be rotated in either direction?

050 Y N Execute Operator Test 3 without tape threaded. Termination Code 98?

060 1 Replace Power Amplifier PWA.

070 2 2 Replace Read-Write-Servo PWA. (See Note 3 on page 6-130)

080 1 Replace Take-Up Motor/Tach Assembly.

090 1 Replace Supply Hub Assembly.

STU FAULT CODE 25 - LOW TENSION FAULT

00	File sensor saw the fault first
40	Takeup sensor saw the fault first

00	Fault occurred during constant motion
10	Fault occurred on down ramp
20	Fault occurred on up ramp
30	Fault occurred in stoplock

00	Fault occurred in forward direction
04	Fault occurred in reverse direction

00	Fault occurred with 25 ips demanded
01	Fault occurred with 100 ips demanded
02	Fault occurred with 200 ips demanded

00	Fault occurred while drive was moving at constant velocity, on ramp, or in stoplock for less than 1 sec.
01	Fault occurred with drive in stoplock for more than 1 sec.

00	Fault occurred with pneumatic pump enabled.
08	Fault occurred with pneumatic pump shut down.

Assumption: STU displays Fault Code 26 as a result of a servo fault.

NOTE

Following any corrective action for Sub-Fault Codes 01 to 06, tape should be threaded onto take-up, wound on by hand for approximately 50 turns, and then perform an Untensioned Unload. For all other Sub-Fault Codes, tape should be loaded and then unloaded.

010 1 Ensure all cables to Power Amplifier Assembly are correctly connected.

020 2 Ensure all leads to door switch are unbroken and correctly connected.

030 Y N Sub-Fault Code 09?

040 Y N With tape threaded, execute Test 2. Termination Code 70?

050 1 Invalid operator sequence (Refer to CE Test 02 on page 6-106).

060 Y N Termination Code 81?

070 Y N Termination Code 82?

080 Y N Termination Code 84?

090 3 3 1 Replace Read-Write-Servo PWA (See Note 3 on page 6-130).

100 2 1 Replace Take-Up Motor/Tach Assembly.

110 1 1 Replace Power Amplifier Assembly.

120 2 Replace Supply Motor Assembly.

130 Y N Without tape threaded, execute Test 3. Termination Code 84?

2 2
A B

	A	B		
	1	1		
140		Y	N	Termination Code 96?
150			Y	N Does take-up reel move during execution of Test 3?
160		1	1	Ensure cable is correctly connected to take-up tach.
170			1	Replace Take-up Motor/Tach Assembly.
180			2	2 Replace Read-Write-Servo PWA (See Note 3 on page 6-130).
190			3	Replace door switch (interlock).
200		Y	N	Does take-up reel move during execution of Test 3?
210			1	Replace door switch (interlock).
220	1	1	2	Replace Take-Up Motor/Tach Assembly.
230	2		3	Replace Read-Write-Servo PWA (See Note 3 on page 6-130).
240		2		Replace Power Amplifier Assembly.

STU FAULT CODE 26 - SERVO FAULT

01	Takeup reel moving in wrong direction during untensioned unload
02	Takeup reel not moving during untensioned unload
03	Takeup reel too fast during untensioned unload
04	Takeup reel too slow during untensioned unload
05	Voltage sensed in wrong half of file reel amplifier bridge while pulsing file reel
06	Timeout to get unwind speed during untensioned unload
07	Voltage sense fault in file reel amplifier bridge during load
08	Voltage sense fault in takeup reel amplifier bridge during load
09	Fine line tach fault on load

Assumption: STU displays Fault Code 27 as a result of not detecting any single line tachs from the supply reel.

NOTE

Following any corrective action, Operator Test 1 should be executed.

010 1 Ensure that cable is correctly connected to Supply Motor Tach.

020 2 Replace Read-Write-Servo PWA (See Note 3 on page 6-130).

030 3 Replace Supply Motor Assembly.

STU FAULT CODE 27 - NO COARSE TACHS

01	No coarse tachs during load
02	No coarse tachs during tension recovery section of load

Assumption: STU displays Fault Code 28 as a result of a tension recovery timeout.

NOTE

Following any corrective action, Operator Test 1 should be executed.

010 1 Replace Read-Write-Servo PWA (See Note 3 on page 6-130).

STU FAULT CODE 28 - TENSION RECOVERY PROBLEM

01	Tension recovery lasting longer than 0.5 second

Assumption: STU displays Fault Code 29 as a result of detecting absence of tape. This fault can be caused by the use of a damaged tape that has oxide missing, such that the BOT and EOT sensors detect light passing through the tape.

Unloading of tape with a short leader may also result in Fault Code 29.

NOTE

Following any corrective action, Operator Test 1 should be executed.

010	Y	N	Disconnect cable from the EOT/BOT Sensor Assembly. Remove the reel of tape, close operator door, and press the LOAD switch. Fault Code 11?
020	1		Replace BOT/EOT Sensor Assembly.
030	2	1	Replace Read-Write-Servo PWA Assembly (See Note 3 on page 6-130).

STU FAULT CODE 29 - ABSENCE OF TAPE

01	Absence of tape

Assumption: STU displays Fault Code 30 as a result of a detected fault on an Up ramp. A possible cause of this fault, with stiction tapes, is when tape sticks to the read-write head. Another possible cause is a tape with damaged BOT marker.

NOTE

Following any corrective action, Operator Test 1 should be executed.

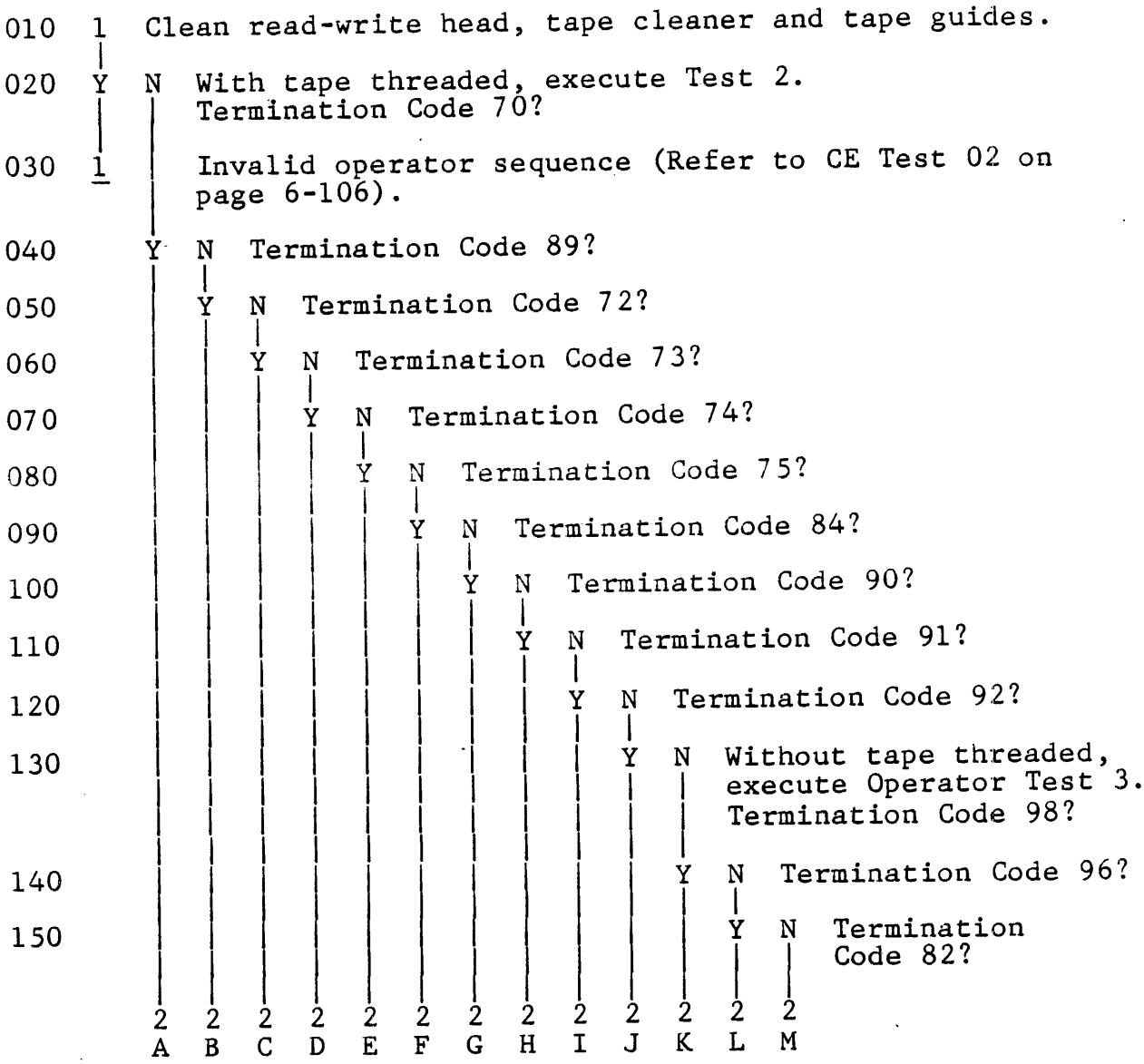

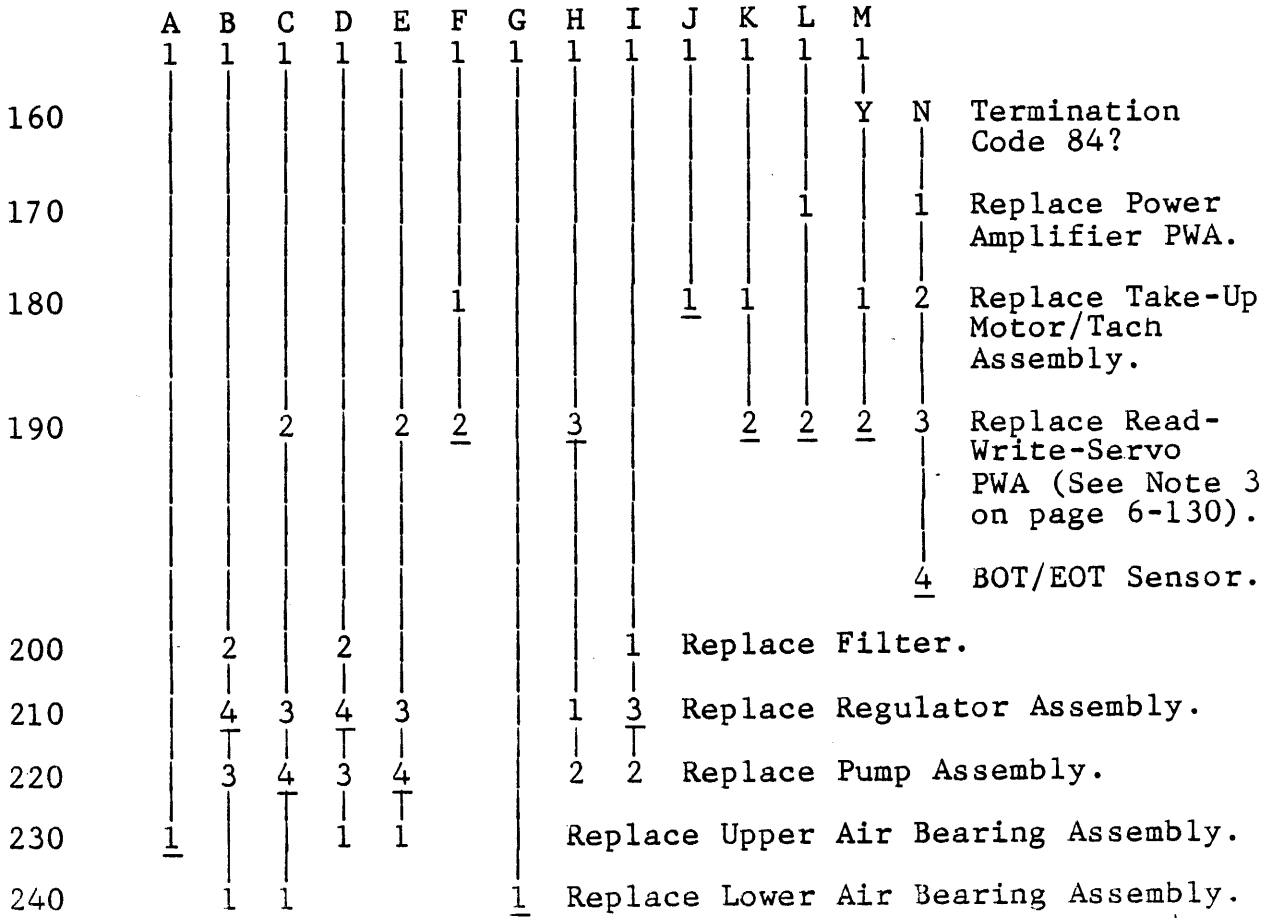
A B C D E F G H I J K L M
1 1 1 1 1 1 1 1 1 1 1 1 1
160 Y N Termination Code 84?
170 1 1 Replace Power Amplifier PWA.
180 1 1 1 1 1 2 Replace Take-Up Motor/Tach Assembly.
190 2 2 2 3 2 2 2 3 Replace Read-Write-Servo PWA (See Note 3 on page 6-130).
4 BOT/EOT Sensor.
200 2 2 1 Replace Filter.
210 4 3 4 3 1 3 Replace Regulator Assembly.
220 3 4 3 4 2 2 Replace Pump Assembly.
230 1 1 1 Replace Upper Air Bearing Assembly.
240 1 1 1 Replace Lower Air Bearing Assembly.

STU FAULT CODE 30 - UP RAMP FAULT

01	Failed to move 4 quarter tachs in reverse direction within deadman time
02	Failed to move 4 quarter tachs in forward within deadman time
03	Failed to move 0.08 inch in forward direction within deadman time (detected by stiction test)
04	Failed to move 0.125 inch in forward direction within deadman time (detected by stiction test)
05	Failed to reach top of ramp within deadman time
06	Ramp time time nominal - 50% (i.e. too fast)
07	Ramp time time nominal + 50% (i.e. too slow)

00	Fault occurred on forward ramp
20	Fault occurred on reverse ramp

00	Fault occurred on 25 ips start/stopramp
40	Fault occurred on 100 ips ramp
80	Fault occurred on 25 ips streaming ramp

Assumption: STU displays Fault Code 31 as a result of a detected fault on a Down ramp. A possible cause is a tape with a damaged BOT marker.

NOTE

Following any corrective action, Operator Test 1 should be executed.

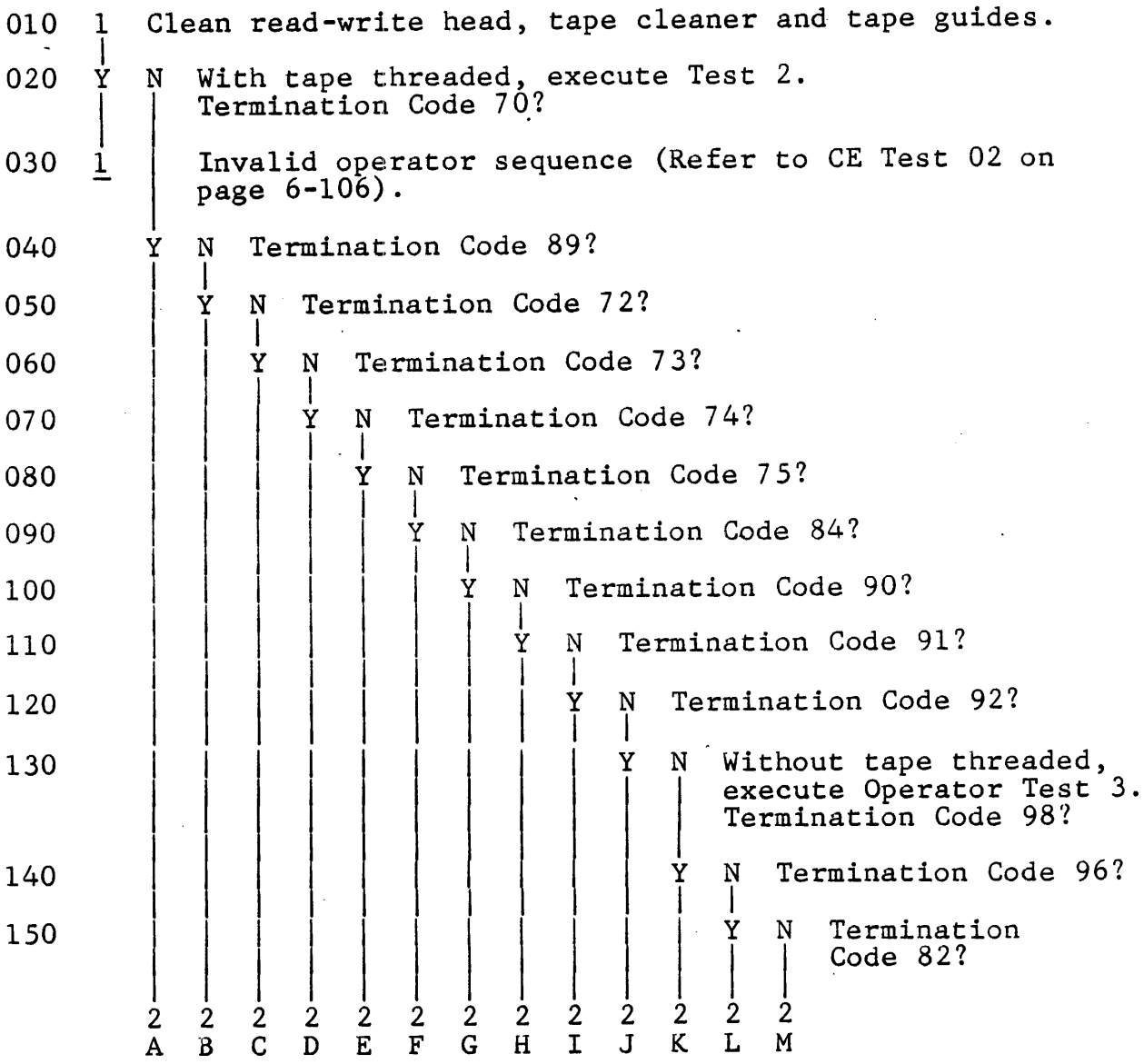

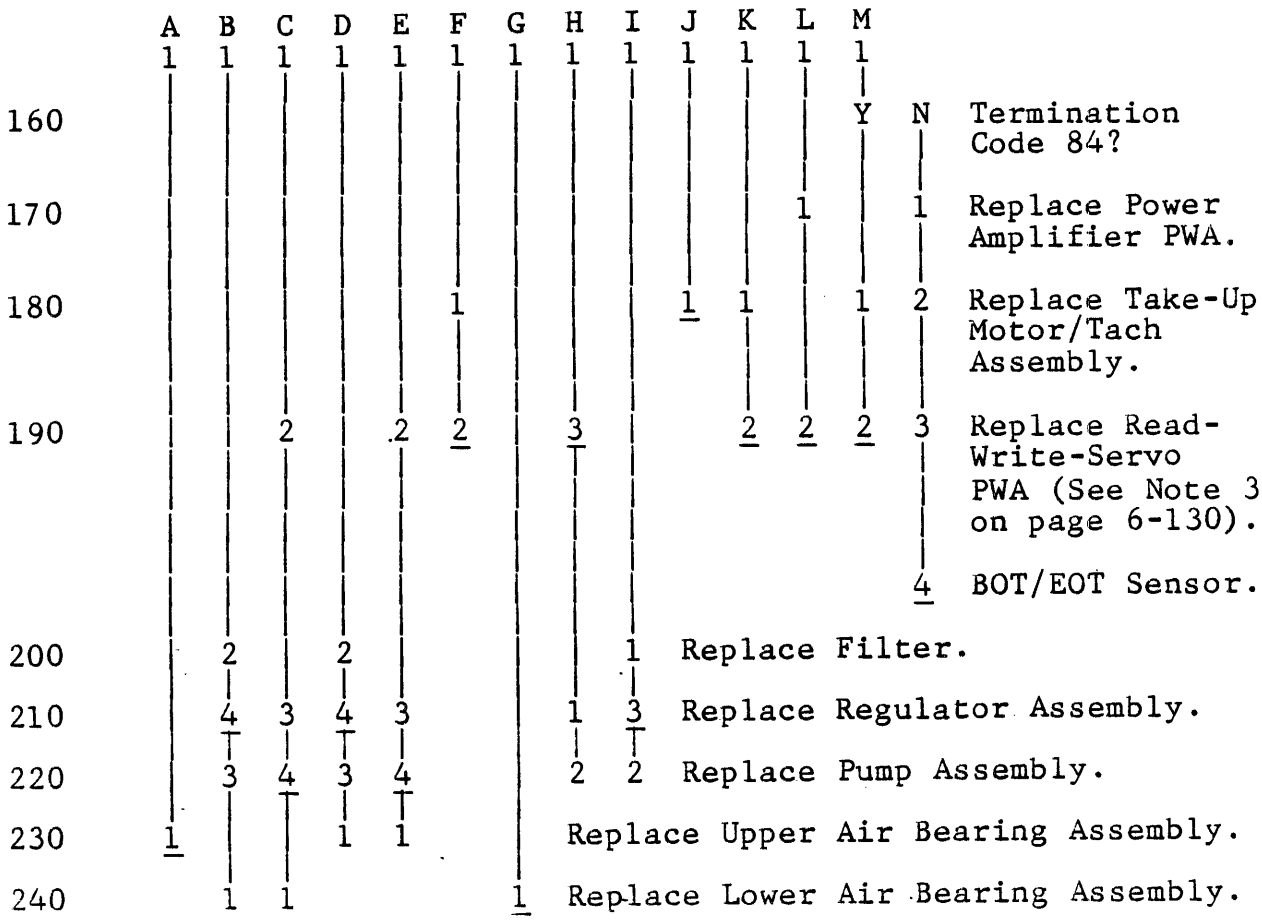
A B C D E F G H I J K L M
1 1 1 1 1 1 1 1 1 1 1 1 1
160 Y N Termination Code 84?
170 1 1 Replace Power Amplifier PWA.
180 1 1 1 1 2 Replace Take-Up Motor/Tach Assembly.
190 2 2 3 2 2 2 3 Replace Read-Write-Servo PWA (See Note 3 on page 6-130).
4 BOT/EOT Sensor.
200 2 2 1 Replace Filter.
210 4 3 4 3 1 3 Replace Regulator Assembly.
220 3 4 3 4 2 2 Replace Pump Assembly.
230 1 1 1 Replace Upper Air Bearing Assembly.
240 1 1 1 Replace Lower Air Bearing Assembly.

STU FAULT CODE 31 - DOWN RAMP FAULT

01	Failed to detect any quarter tachs in forward direction
02	Failed to detect any quarter tachs in reverse direction
03	Failed to detect change of direction (forward to reverse) on forward 100 ips down ramp
04	Failed to detect change of direction (reverse to forward) on reverse 100 ips down ramp
05	Failed to reach end of forward 25 ips ramp within deadman time
06	Failed to reach end of reverse 25 ips ramp within deadman time
07	25 ips ramp time less than nominal -50% (ie. too fast)
08	25 ips ramp time greater than nominal +50% (ie. too slow)
11	100 ips ramp time less than nominal -50% (ie. too fast)
12	100 ips ramp time greater than nominal +50% (ie. too slow)

00	Fault occurred on forward ramp
20	Fault occurred on reverse ramp

00	Fault occurred on 25 ips start/stop ramp
40	Fault occurred on 100 ips ramp
80	Fault occurred on 25 ips streaming ramp

Assumption: STU displays Fault Code 32 as a result of a velocity servo fault.

NOTE

Following any corrective action, Operator Test 1 should be executed.

010	Y	N		Without tape threaded, execute Operator Test 3. Termination Code 96 or 98?
020		Y	N	Termination Code 82?
030			Y	N Termination Code 84?
040	2			1 Replace Read-Write-Servo PWA (See Note 3 on page 6-130).
050		1		2 Replace Power Amplifier PWA.
060	1		1	3 Replace Take-up Motor/Tach Assembly.
070				4 Replace Filter.
080				5 Replace Pump Assembly.
090				6 Replace Regulator Assembly.

STU FAULT CODE 32 - STOPLOCK OVER-RUN

01	TU Reel position is 32 quarter tachs reverse of correct stoplock position.
02	TU Reel position is 32 quarter tachs forward of correct stoplock position.

STU FAULT CODE 32 (Cont'd)

00	Fault occurred with drive in stoplock less than 1 sec.
04	Fault occurred with drive in stoplock more than 1 sec.

00	Fault occurred with pneumatic pump enabled
10	Fault occurred with pneumatic pump shut down

Assumption: STU displays Fault Code 33 as a result of a tape positioning fault when about to write.

NOTE

Following any corrective action, Operator Test 1 should be executed.

010	Y	N	Remove reel of tape and execute Test 3. Termination Code 98?
020		1	Replace Read-Write-Servo PWA (See Note 3, page 6-130).
030	1		Replace Take-up Motor/Tach Assembly.

STU FAULT CODE 33 - TAPE POSITIONING FAULT

01	Passed erase head turn-on point when about to write at low speed
02	Passed erase head turn-on point when about to write at high speed

Assumption: STU displays Fault Code 34 as a result of the STU losing positioning control at Load Point.

NOTE

Following any corrective action, Operator Test 1 should be executed.

010 1 Replace Read-Write-Servo PWA (See Note 3 on page 6-130).

STU FAULT CODE 34 - BOT POSITIONING FAULT

01	Timed out waiting for BOT in forward direction during a Load point "reposition"
02	Time out waiting for BOT in reverse direction during a Load point "reposition"

Assumption: STU displays Fault Code 35 as a result of the STU losing positioning control.

NOTE

Following any corrective action, Operator Test 1 should be executed.

010	Y	N	Remove reel of tape and execute Test 3. Termination Code 98?
020		1	Replace a Read-Write-Servo PWA. (See Note 3 on page 6-130.)
030	1		Replace Take-up Motor/Tach Assembly.

STU FAULT 35 - POSITIONING FAULT

00	Failed to reach target at 25 ips.
02	Failed to reach target at 100 ips

00	Failed to reach target in forward direction
01	Failed to reach target in reverse direction

Assumption: STU displays Fault Code 36 as a result of a speed fault.

NOTE

Following any corrective action, Operator Test 1 should be executed.

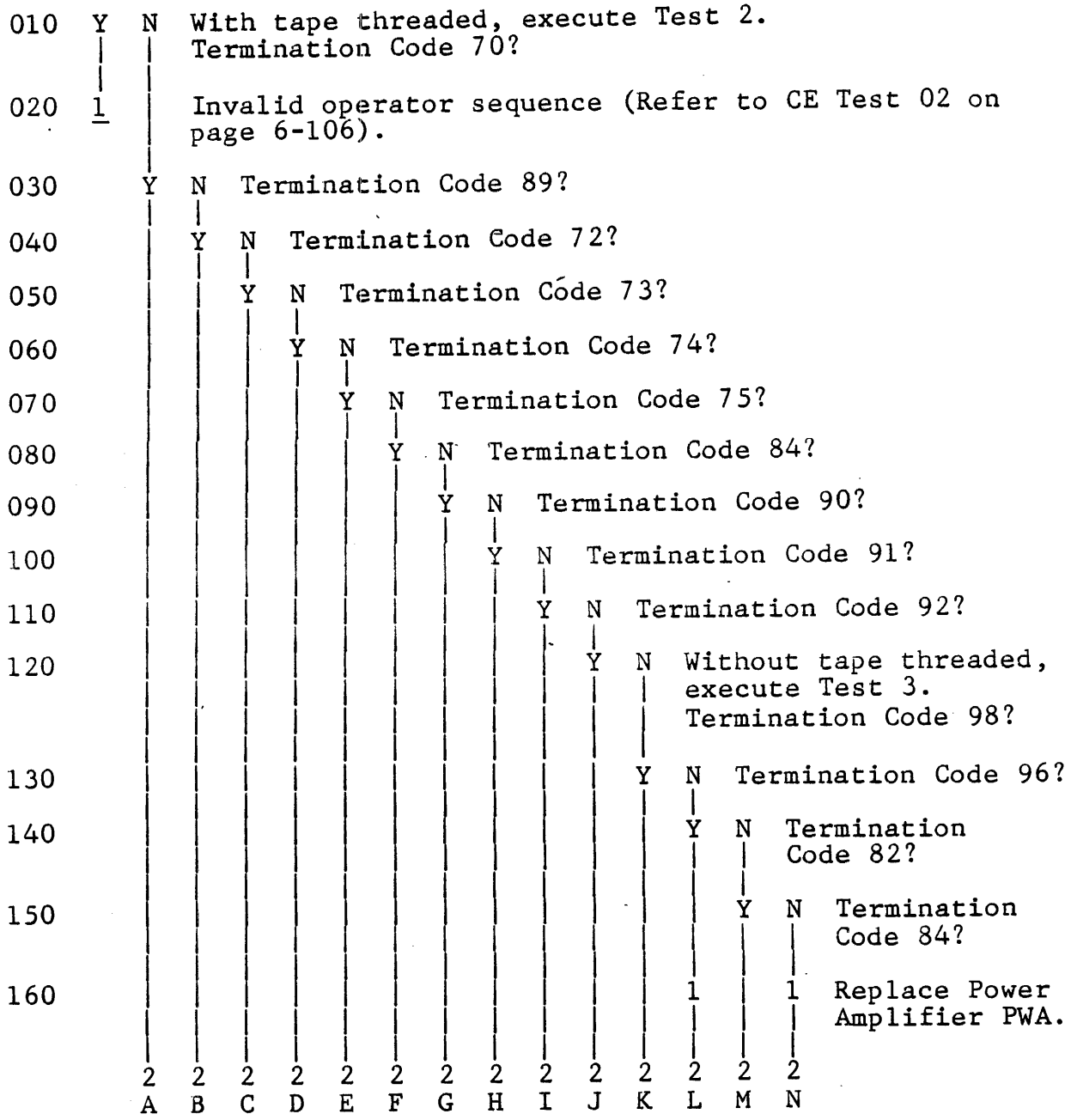

	A	B	C	D	E	F	G	H	I	J	K	L	M	N	
	1	1	1	1	1	1	1	1	1	1	1	1	1	1	
170						1				1	1		1	2	Replace Take-Up Motor Assembly.
180			2		2	2		3			2	2	2	3	Replace Read-Write-Servo PWA (See Note 3 on page 6-130).
190		2		2					1						Replace Air Filter.
200		4	3	4	3			1	3						Replace Regulator Assembly.
210		3	4	3	4			2	2						Replace Pump Assembly.
220	1			1	1										Replace Supply Air Bearing Assembly.
230		1	1				1								Replace Take-Up Air Bearing Assembly.

STU FAULT CODE 36 - SPEED FAULT

00	Speed fault at 25 ips
04	Speed fault at 100 ips

00	Speed fault occurred in forward direction

00	Speed less than nominal -12.5% (i.e. too slow)
01	Speed greater than nominal +12.5% (i.e. too fast)

Assumption: STU displays Fault Code 37 as a result of not being able to re-establish tension within 5 seconds of pump power-up.

NOTE

Following any corrective action, Operator Diagnostic Test 01 should be executed.

010 1 Replace Read-Write-Servo PWA (See Note 3 on page 6-130).

020 2 Replace Power Amplifier PWA.

030 3 Replace Supply Motor/Tach Assembly.

STU FAULT CODE 37 - PUMP POWER-UP FAULT

01	Unable to re-establish tension within 5 seconds

Assumption: STU displays Fault Code 47 resulting from a velocity correction calculation fault.

This fault can be caused by the velocity correction factor in the back-up memory being corrupted. Should this be the case, the power-on health check should fault, displaying Fault Code 51. To overcome this problem, CE Test 37 could be executed. However, if all precautions are taken, the back-up memory should never be corrupted.

NOTE

Following any corrective action, Operator Test 1 should be executed.

010 1 Replace Read-Write-Servo PWA (See Note 3 on page 6-130).

STU FAULT CODE 47 - VELOCITY CORRECTION FAULT

01	Speed correction multiplier in the backup memory is out of range

Assumption: STU displays Fault Code 48 resulting from an unload fault. This fault can be caused by a damaged tape leader.

NOTE

Following any corrective action, tape should be loaded and unloaded again.

010	1		Clear Read-Write Head, tape cleaner and tape guides.
020	2		Change tape to a known good tape.
030	Y	N	Without tape threaded, exècute Test 3. Termination Code 98?
040		Y	N Termination Code 96?
050		2	1 Replace Read-Write-Servo PWA (See Note 3 on page 6-130).
060			2 Replace Supply Motor Assembly.
070	1	1	Replace Take-up Motor/Tach Assembly.

STU FAULT CODE 48 - UNLOAD FAULT

01	Did not find AOT within 6 seconds of losing tension on unload

Assumption: STU displays Fault Code 50 as a result of a Read-Write-Servo PWA health check fault.

NOTE

Following any corrective action, the unit should be powered off and on again.

010	Y	N	Sub-Fault Code 06 or 07?
	|	|	
020	1	1	Replace Read-Write-Servo PWA (See Note 3, page 6-130).
	|		
030	2		Replace Formatter-Control PWA.

STU FAULT CODE 50 - IRRECOVERABLE DEVICE HEALTHCHECK FAULT

01	Read-write-servo diagnostic PROM checksum fault
02	Read-write-servo flag memory fault
03	Read-write-servo PTM fault
06	Read-write-servo healthcheck did not complete
07	Read-write-servo initialization did not complete
08	Read-write-servo functional PROM checksum fault

Assumption: STU displays Fault Code 51 during Power-On Health Check.

A possible cause of this fault is that the write enable jumper on the Read-Write-Servo PWA, which protects the contents of the back-up memory, has been left in the "STORE" position. Should this have occurred, the back-up memory should be re-initialized as described in Appendix A.

NOTE

Following any corrective action, the unit should be powered off and powered on again.

010 1 Replace Read-Write-Servo PWA (See Note 3 on page 6-130).

STU FAULT CODE 51 - RECOVERABLE DEVICE HEALTHCHECK FAULT

11	EE PROM checksum fault
12	EE PROM defective
14	EGC DAC fault

Assumption: STU displays Fault Code 52 as a result of a radius calculation fault.

A possible cause of this fault is that BOT reflective marker is not positioned correctly. ANSII Standard X3.39 specifies that the BOT marker should be placed from 14 feet to 18 feet from the physical beginning of tape.

NOTE

Following any corrective action, Operator Test 1 should be executed.

010	Y	N		Without tape threaded, execute Test 3. Termination Code 98?
020		Y	N	Termination Code 96?
030		2	1	Remove tape reel and clean hub pads.
			2	Replace Read-Write-Servo PWA (See Note 3 on page 6-130).
040			3	Replace Supply Motor Assembly.
			4	Replace Supply Reel Hub Assembly.
050	1	1		Replace Take-up Motor/Tach Assembly.

STU FAULT CODE 52 - SPEED CALCULATION FAULT

10	A previous fault caused by modulus being too large
20	A previous fault caused by modulus change inconsistent with direction of tape
40	A previous fault caused by modulus being outside expected range
80	Unable to obtain consistent harvest counts in determining the file reel radius
90	Unable to obtain harvest counts in determining file reel radius within 5 seconds during load

STU FAULT CODE 52 (Cont'd)

01	This fault caused by modulus being too large
02	This fault caused by modulus change inconsistent with direction of tape
04	This fault caused by modulus being outside expected range
08	This fault caused by harvest count greater than 8000

Assumption: STU displays Fault Code 53 as a result of a radius calculation arithmetic error.

NOTE

Following any corrective action, Operator Test 1 should be executed.

010 1 Replace Read-Write-Servo PWA (See Note 3 on page 6-130).

STU FAULT CODE 53 - ARITHMETIC ERROR

01	Attempt to divide by 0
02	Integer overflow on floating point to integer conversion
03	Negative result on floating point subtraction

Assumption: STU displays Fault Code 54 as a result of an erase current fault.

NOTE

Following any corrective action, Operator Test 1 should be executed.

010	Y	N	Sub-Fault Code 10?
	|	|	
020	2	1	Replace Read-Write-Servo PWA Assembly (See Note 3 on page 6-130).
	|		
030	1		Ensure leads are correctly connected to the erase head with black lead to the back and white to the front.
	|		
040	3		Replace Read-Write Head Assembly.

STU FAULT CODE 54 - ERASE CURRENT FAULT

01	Erase current present after degauss
02	Erase Current present when reading
10	Erase Current not present when writing

Assumption: STU displays Fault Code 55 as a result of the Read-Write-Servo microprocessor timing out during a Rewind or Load-Rewind operation.

NOTE

Following any corrective action, Operator Test 1 should be executed.

010 1 Replace Read-Write-Servo PWA (See Note 3 on page 6-130).

STU FAULT CODE 55 - LOAD/REWIND TIMEOUT FAULT

01	Failed to reach BOT within specified time during load
02	Failed to reach BOT within specified time during rewind

Assumption: STU displays Fault Code 56 as a result of a communication problem between the two STU microprocessors.

NOTE

Following any corrective action, device DC power should be turned off and then turned on, followed by the execution of Operator Test 1.

010 1 Ensure that Formatter Control PWA and Read-Write-Servo PWA are firmly connected.

020 2 Ensure that the DC power connector is firmly connected to Read-Write-Servo PWA.

030 3 Replace Read-Write-Servo PWA (See Note 3 on page 6-130).

040 4 Replace Formatter Control PWA.

STU FAULT CODE 56 - PROCESSOR COMMUNICATION FAULT

04	Read-write-servo did not respond to system enable
05	Bus integrity test fault
20	Read-write-servo did not go busy in response to command from formatter
21	Read-write servo rejected command from formatter
22	Read-write-servo did not acknowledge command from formatter
32	Read-write servo did not respond to sense command from formatter

Assumption: STU displays Fault Code 57 as a result of the Formatter-Control Microprocessor not detecting the correct response from the Read-Write-Servo Microprocessor.

NOTE

Following any corrective action, Operator Test 1 should be executed.

010	1	Ensure that Formatter-Control PWA and Read-Write-Servo PWA are firmly connected.
020	2	Replace Read-Write-Servo PWA (See Note 3 on page 6-130).
030	3	Replace Formatter Control PWA.

STU FAULT CODE 57 - ILLOGICAL FAULT

30	Device did not stop after stop commanded
31	Device did not stop after reset
33	Device not at BOT after load
34	Device not at BOT after rewind
39	Device did not reset busy on reverse into BOT

Assumption: STU displays Fault Code 58 during Power-On due to a failure in the functional operation of Formatter-Control PWA.

NOTE

Following any corrective action, the STU should be powered off and on again.

010 1 Replace Formatter-Control PWA.

STU FAULT CODE 58 - RECOVERABLE FORMATTER HEALTHCHECK FAULT

Second byte defines formatting logic fault.

Assumption: STU displays Fault Code 59 as the result of a Formatter-Control PROM Checksum Error being detected during Power-On Health Check.

NOTE

Following any corrective action, the STU should be powered off and powered on again.

020 1 Replace Formatter-Control PWA.

STU FAULT CODE 59 - IRRECOVERABLE FORMATTER HEALTHCHECK FAULT

00	Formatter PROM checksum fault

Assumption: STU displays Fault Code 60 as the result of a functional operator panel switch being closed during Power-On Health Check.

This fault can also be generated if any of the Load/Rewind, Unload, On-Line or Reset switches are depressed for 15 seconds during the Power-On Health Check.

NOTE

Following any corrective action, the STU should be powered off and powered on again.

010 1 Replace Operator Panel Assembly.

020 2 Replace Formatter-Control PWA.

STU FAULT CODE 60 - IRRECOVERABLE OPERATOR PANEL FAULT

00	LOAD/REWIND or UNLOAD or ONLINE or RESET switch permanently pressed

Assumption: STU displays Fault Code 61 as the result of a diagnostic operator panel switch being closed during Power-On Health Check.

This fault can also be generated if any of the Test, Step, CE or Execute switches are depressed for 15 seconds during the Power-On Health Check. Should this fault occur, normal on-line operation of the STU is available after pressing the Reset switch. However, the use of STU diagnostics will not be made available.

NOTE

Following any corrective action, the STU should be powered off and powered on again.

010 1 Replace Operator Panel Assembly.

020 2 Replace Formatter Control Assembly.

STU FAULT CODE 61 - RECOVERABLE OPERATOR PANEL FAULT

00	TEST or STEP or CE or EXEC switch permanently pressed

TEST DESCRIPTIONS

GENERAL INFORMATION

The diagnostic test information is presented under the following headings:

- Test Requirement - Conditions which must be met before execution of the test.
- Test Description - A brief explanation of what the test is all about.
- Test Options - A list of the options and the option code applicable to the test.
- Test Sequence - A step-by-step breakdown of what happens during execution of the test. The test sequence is performed automatically when the EXECUTE switch is pressed.
- Possible Termination Codes - A list of termination codes associated with the test.

Those tests referenced by the structured analysis methods (SAMs) and in the removal/replacement procedures can be used by all levels of maintenance personnel. Tests which are not referenced in the maintenance section of this manual are to be used only by technical specialists who have been instructed in the use and limitations of these tests.

INITIATING A DIAGNOSTIC TEST AND SELECTING OPTIONS

After ensuring that the test requirements are met, follow the steps below to initiate a diagnostic test.

1. While pressing the CE switch, press the TEST switch.

   a. The DIAGNOSTIC indicator lights.

   b. The display panel indicates 00.

2. Press the STEP switch.

   a. The display number increments each time the STEP switch is pressed, or increments automatically if the STEP switch is held pressed.

   b. To facilitate test number selection, use the following procedure. Example: Test 39 selection required.

      - Press the STEP switch until 03 appears on the display panel.

      - Press the TEST switch and the 3-digit transfers to the left.

      - The display now indicates 30.

      - Press the STEP switch again until the display increments from 30 to 39.

   c. If test options (see test descriptions) are available and desired, press and hold the CE switch, and then press the EXECUTE switch while the CE switch is held pressed. The display will indicate 00. The STEP switch is then pressed to select the desired option.

3. Press the EXECUTE switch.

   a. The test is initiated.

If the test runs to completion, the display panel indicates 00. If the test fails, the display panel indicates the fault code.

LIST OF DIAGNOSTIC TESTS

The diagnostic tests are listed below in numerical order with the options available for each test.

OPERATOR TESTS

TEST NO.	DESCRIPTION
01	Functional Fault Detection Diagnostic

CE TESTS

TEST NO.	DESCRIPTION	OPTION*
02	Tension Fault Isolation Diagnostic	
03	Velocity Fault Isolation Diagnostic	
04-09	Reserved	
10	25 ips Forward to EOT	L
11	25 ips Reverse to BOT	L
12	25 ips Forward Ramps to EOT	L
13	25 ips Reverse Ramps to BOT	L
14	25 ips Repositioning	L
15	100 ips Forward Ramps to EOT	L
16	100 ips Reverse Ramps to BOT	L
17	100 ips Repositioning	L
18	100 ips Forward to EOT	L
19	100 ips Reverse to BOT	L
20	Formatter Internal Fault Detection Diagnostic	B
21	Write 2K Byte Records at 25 ips to EOT (At EOT, Rewind to BOT.)	B
22	Read at 25 ips to EOT (At EOT, Rewind to BOT.)	B
23	Write 256 Byte Records at 100 ips to EOT (At EOT, Rewind to BOT.)	B
24	Read at 100 ips to EOT (At EOT, Rewind to BOT.)	B
25-27	Reserved	
28	Perform Command Stack entered by Diagnostic 97 at 25 IPS Start/Stop	B

* See key at end of test list.

CE TESTS (Cont'd)

TEST NO.	DESCRIPTION	OPTION*
29	Perform Command Stack entered by Diagnostic 97 at 100 IPS Thrashing	B
30	Check Read Amplitudes at 25 and 100 ips to be within tolerance of 0.8 volt.	B
31	Determine EGC Gains at 25 and 100 ips and store gains in Backup Memory. Then check read amplitudes at 25 and 100 ips to be within tolerance of 0.1 volt.	X
32	Check Read Amplitudes at 25 and 100 ips with pre-recorded all 1's tape with tolerance of 0.3 volt.	B
33	Determine EGC Gains at 25 ips and store gains in Backup Memory.	X
34	Determine EGC Gains at 100 ips and store gains in Backup Memory.	X
37	Determine Velocity Servo Correction Multiplier and store multiplier in Backup Memory.	X
38	Apply approximately 8 ounce tension by pulsing supply reel with take-up reel in Stoplock.	X
39	Write all 1's to EOT at 25 ips (At EOT, Rewind to BOT.)	B
40	Write all 1's to EOT at 100 ips (At EOT, Rewind to BOT.)	B
41	Stoplock Take-up Reel	X
42	Enable Tension Servo	X
43	Turn-on Pump	X
44	Fast Search Forward For EOT	X
45	EGC DAC Scope Loop	X
46	Velocity DAC Scope Loop	X
47	R/W/S Microprocessor Outputs Scope Loop	X
48	Set Up Pump Power-Down Timer	X
49	Reserved	

* See key at end of test list.

CE TESTS (Cont'd)

TEST NO.	DESCRIPTION	OPTION*
50	25 IPS Forward Streaming Ramps to EOT	L
51	25 IPS Reverse Streaming Ramps to BOT	L
52-60	Reserved	
61	Take-up Motor and Power Amp Marginal Fault Detection	X
62	Take-Up Fine-Line Tach Fault Detection	X
63-90	Reserved	
91	Functional Fault Detection (Same as Operator Test 01 except: a) Will start in Loaded or Unloaded condition, b) Will not unload upon completion, and c) bypass EGC test.)	B
92-96	Reserved	
97	Read/Write Command Stack Generation Diagnostic	X

OPTION KEY

X = Do not use any options.
L = Test will loop. Do not use any options.
B = CE may use options.

00 = Halt if read or write errors exceed limits specified, halt on completion of test (Default option).

01 = Loop on test, halt if read or write errors exceed limit specified on any given pass.

02 = Loop on test, bypass read or write error halts.

NOTE

Option of halting or bypassing errors only exists for read/write type errors; all other errors will cause test to halt, with the appropriate fault code displayed, regardless of the option selected.

TEST 01: FUNCTIONAL FAULT DETECTION TEST (FOR OPERATOR)

TEST REQUIREMENT: A write enabled scratch tape should be threaded, but NOT loaded (untensioned).

DESCRIPTION: Test 01 performs various functions normally performed during functional operations. Unit halts with appropriate fault code if a functional fault occurs.

TEST OPTIONS: None.

TEST SEQUENCE:

a. Illuminate ONLINE and RESET LEDs. Increment display from 00 to 99. Extinguish ONLINE and RESET LEDs. Display 01.

b. Load tape.

c. Check read amplitudes at low and high speeds. Rewind.

d. Write 100 blocks at 25 IPS start/stop (see NOTE 1).

e. Space reverse, erase, and write file mark (check for file mark detect). Space reverse and check for file mark detect. Read forward and again check for file mark detect.

f. Read reverse 100 blocks previously written at 25 IPS start/stop mode.

g. Read forward 2 blocks at 25 IPS start/stop.

h. Check gap lengths twice.

i. Read forward 94 blocks at 25 IPS start/stop.

j. Repeat steps d to i at 25 IPS continuous mode.

k. Repeat steps d to i at 100 IPS streaming mode.

l. Change speed from high to low and then low to high.

m. Write 10 blocks at 100 IPS "thrashing" (see NOTE 2).

n. Space reverse 10 blocks at 100 IPS "thrashing".

o. Read forward 10 blocks at 100 IPS "thrashing".

p. Rewind.

q. Speed mode change.

TEST 01: (Cont'd)

r. Read forward 200 blocks at 100 IPS streaming. (Check for file mark detect.)

s. Write to EOT at 100 IPS streaming (see NOTE 2).

t. Space reverse 200 blocks at 100 IPS streaming.

u. Read forward 10 blocks at 100 IPS "thrashing".

v. Read forward 20 blocks at 25 IPS start/stop.

w. Read reverse 20 blocks at 25 IPS start/stop

x. Rewind/Unload.

NOTE 1: Data blocks written at 25 IPS are 2K bytes with first 256 bytes "random" and remaining bytes of fixed pattern.

NOTE 2: Data block written at 100 IPS are 256 bytes of all zeros.

POSSIBLE TERMINATION CODES:

00 - Test Successful
01 - Read Envelope Fault
02 - Read Amplitude Range Fault
03 - ID Check
04 - Low Speed Write Error
05 - Low Speed Read Error
06 - High Speed Write Error
07 - High Speed Read Error
08 - Noise In IBG
10 to 69 - Refer to Fault SAM's.

TEST 02: TENSION FAULT ISOLATION

TEST REQUIREMENT: Tape should be threaded, but NOT loaded (untensioned).

Valid fault code displayed in operator panel.

NOTE: Test 2 will run only if, during execution of Test 1, one of the following codes appear in the operator panel display: 22, 24, 26, 30, 31, 36.

TEST DESCRIPTION: Test 2 is an extension of Test 1. Test 2 isolates servo faults by checking various assemblies of the STU.

TEST OPTIONS: None.

TEST SEQUENCE:

a. Verify operator door is closed and tape is not loaded.

b. Verify EGC DAC of Read/Write/Servo PWA is operational. If not, display Termination Code 80.

c. Verify file reel power amp is operational. If not, display Termination Code 81.

d. Verify take-up reel power amp is operational. If not, display Termination Code 82.

e. Verify Demand Velocity DAC of Read/Write/Servo PWA is operational. If not, display Termination Code 83.

f. Move take-up reel slightly in forward direction. Check for correct count of quarter-tach pulses. If incorrect, display Termination Code 84.

g. Repeat step f in the reverse direction. Display Termination Code 84 if tach count is incorrect.

h. Verify velocity feedback loop of Read/Write/Servo PWA is operational by putting take-up motor in stoplock mode, and monitoring forward and reverse quarter-tachs. Display Termination Code 85 if any fault is detected.

i. Verify that tension comparators on Read/Write/Servo PWA are operational. Vary tension offsets and monitor status of tension level status lines. If any fault is detected, display Termination Code 87.

TEST 02: (Cont'd)

j. With pneumatic pump off, zero tension offsets. If fault occurs, display Termination Code 97.

k. Turn on pneumatic pump. If take-up sensor detects at least 2.0 ounces of tension, display Termination Code 90. If file sensor detects at least 2.0 ounces of tension, display Termination Code 89.

l. Enable take-up servo. Move take-up reel from 0 IPS to 6 IPS in forward direction.

m. If both sensors do not detect at least 2.0 ounces of tension within 15 seconds, display Termination Code 91.

n. If, during this 15 seconds, the file sensor does not detect 2.0 ounces of tension within 100 milliseconds after take-up sensor, display Termination Code 74. If take-up sensor does not detect 2.0 ounces within 100 milliseconds after file sensor, display Termination Code 72.

p. Move file reel slowly in reverse direction while take-up reel is moving forward at 6 IPS. If neither sensor detects at least 16 ounces of tension within 500 milliseconds, display Termination Code 92.

q. If, during this 500 milliseconds, the file sensor does not detect 16 ounces of tension within 100 milliseconds after take-up sensor, display Termination Code 75. If take-up sensor does not detect 16 ounces of tension within 100 milliseconds after file sensor, display Termination Code 73.

r. Stop moving file reel in reverse direction. If tension detected on both sensors is not within limits in 100 milliseconds, display Termination Code 98.

s. Stop reel motion. Display Fault Code 00 to indicate test is successful.

TEST 02: (Cont'd)

POSSIBLE TERMINATION CODES:

00 - Test Successful
10 to 69 - Refer to Fault SAM
70 - Test Requirements Not Met, See Test 02
71 - Tape Loaded Fault
72 - TU Sensor Fault 1
73 - TU Sensor Fault 2
74 - File Sensor Fault 1
75 - File Sensor Fault 2
80 - EGC DAC Fault
81 - File Power Amp Fault
82 - TU Power Amp Fault
83 - Demand Velocity DAC Fault
84 - TU Motor/Tach Fault
85 - Velocity Feedback Loop Fault
86 - TU Comparator Fault
87 - File Comparator Fault
89 - File Sensor - 0 Fault
90 - TU Sensor - 0 Fault
91 - Pump Failure Fault
92 - Filter/Regulator, Pump, R/W/S PWA Fault
97 - R/W/S PWA, Sensor Intermittent Fault
98 - R/W/S PWA, Power Amp Fault

TEST 03: VELOCITY FAULT ISOLATION

TEST REQUIREMENT: Tape should not be threaded.

Test 03 should not be used unless Test 01 directs its use. This test may fail if run Stand-alone.

TEST DESCRIPTION: Test 03 isolates velocity servo faults by checking the take-up motor/tach assembly and the velocity servo loop.

TEST OPTIONS: None.

TEST SEQUENCE:

a. Check if the operator door is closed and tape is absent.

b. Ramp up to 4 IPS.

c. Check if distance between two consecutive quarter tachs is within tolerable limits.

d. If, after five tries, at least once, the distance between two consecutive quarter tachs is within limits, go to step f.

e. Display Termination Code 96.

f. Check that the distance between all consecutive quarter tachs is within tolerable limits.

g. If distance between any two consecutive quarter tachs is not within limits, report fault, otherwise, go to step i.

h. Repeat steps e and f. If the error is detected five times, display Termination Code 98.

i. Apply diagnostic lines to move take-up motor in forward direction from 0 to 100 IPS, and measure time it requires to ramp-up. Stop take-up motor.

j. Calculate motor constant from this data.

k. If motor constant is within range, go to step e. If motor constant is out of range the first time, repeat steps i and j. Otherwise, display Termination Code 84.

l. Apply full current to move take-up motor in forward direction from 0 to 100 IPS, and measure time it requires to ramp-up. Stop take-up motor.

TEST 03: (Cont'd)

m. If power amp is not capable of delivering full current in forward direction, flag a fault, otherwise, go to step o.

n. If fault is the first time, repeat steps 1 and m, otherwise, display Termination Code 82.

o. Apply full current to move take-up motor in reverse direction from 0 to 100 IPS, and measure time it requires to ramp-up. Stop take-up motor.

p. If power amp is not capable of delivering full current in reverse direction, flag a fault, otherwise, go to step r.

q. If fault is the first time, repeat steps o and p, otherwise, display Termination Code 82.

r. Display Termination Code 00 to indicate successful completion of test.

POSSIBLE TERMINATION CODES:

00 - Test Is Successful
10 to 69 - Refer to Fault SAM.
82 - Take-Up Power Amp Fault
84 - Take-Up Motor/Tach Fault
94 - Tape Present Fault
95 - Formatter Interrupt received while test in progress.
96 - Servo Loop Fault
98 - Take-up Motor/Tach Fault

CE TEST 10: FORWARD 25 IPS CONTINUOUS

TEST REQUIREMENT: Tape should be loaded.

TEST DESCRIPTION: Test 10 exercises the transport in a continuous mode at 25 IPS in the forward direction. When EOT is detected, tape is stopped and 25 IPS continuous mode is executed in the reverse direction. When BOT is detected, the routine starts again. Manual intervention is required to terminate the test.

TEST OPTIONS: None.

TEST SEQUENCE:

a. Check if the operator door is closed and tape is loaded.

b. Run forward continuously 25 IPS until EOT is detected.

c. Stop and run reverse continuously at 25 IPS until BOT is detected.

d. Stop motion and go to step b.

POSSIBLE TERMINATION CODES:

10 to 69 - Refer to Fault SAM.
70 - Tape Not Loaded Fault

CE TEST 11: REVERSE 25 IPS CONTINUOUS

TEST REQUIREMENT: Tape should be loaded.

TEST DESCRIPTION: Test 11 exercises the transport in a continuous mode at 25 IPS in the reverse direction. When BOT is detected, tape is stopped and 25 IPS continuous mode is executed in the forward direction. When EOT is detected, the routine starts again. Manual intervention is required to terminate the test.

TEST OPTIONS: None.

TEST SEQUENCE:

a. Check if the operator door is closed and tape is loaded.

b. Run reverse continuously 25 IPS until BOT is detected.

c. Stop and run forward continuously at 25 IPS until EOT is detected.

d. Stop motion and go to step b.

POSSIBLE TERMINATION CODES:

10 to 69 - Refer to Fault SAM.
70 - Tape Not Loaded Fault

CE TEST 12: FORWARD 25 IPS RAMPS

TEST REQUIREMENT: Tape should be loaded.

TEST DESCRIPTION: Test 12 exercises the transport in a start/stop mode at 25 IPS in the forward direction. When EOT is detected, the same 25 IPS start/stop mode is executed in the reverse direction. When BOT is detected, the routine starts again. Manual intervention is required to terminate the test.

TEST OPTIONS: None.

TEST SEQUENCE:

a. Check if the operator door is closed and tape is loaded.

b. Run forward at 25 IPS for 120 ms.

c. Stop and pause for 120 ms.

d. Repeat steps b and c until EOT is detected.

e. Run reverse at 25 IPS for 120 ms.

f. Stop and pause for 120 ms.

g. Repeat steps e and f until BOT is detected.

h. Go to step b.

POSSIBLE TERMINATION CODES:

10 to 69 - Refer to Fault SAM.
70 - Tape Not Loaded Fault

CE TEST 13: REVERSE 25 IPS RAMPS

TEST REQUIREMENT: Tape should be loaded.

TEST DESCRIPTION: Test 13 exercises the transport in a start/stop mode at 25 IPS in the reverse direction. When BOT is detected, the same 25 IPS start/stop mode is executed in the forward direction. When EOT is detected, the routine starts again. Manual intervention is required to terminate the test.

TEST OPTIONS: None.

TEST SEQUENCE:

a. Check if the operator door is closed and tape is loaded.

b. Run reverse at 25 IPS for 120 ms.

c. Stop and pause for 120 ms.

d. Repeat steps b and c until BOT is detected.

e. Run forward at 25 IPS for 120 ms.

f. Stop and pause for 120 ms.

g. Repeat steps e and f until EOT is detected.

h. Go to step b.

POSSIBLE TERMINATION CODES:

10 to 69 - Refer to Fault SAM.
70 - Tape Not Loaded Fault

CE TEST 14: 25 IPS REPOSITIONING

TEST REQUIREMENT: Tape should be loaded.

TEST DESCRIPTION: Test 14 is a repositioning routine at 25 IPS. It repositions the tape in the forward direction. When EOT is detected, it repositions the tape in the reverse direction. When BOT is detected, the routine starts again. Manual intervention is required to terminate the test.

TEST OPTIONS: None.

TEST SEQUENCE:

a. Check if the operator door is closed and tape is loaded.

b. Run forward at 25 IPS for 100 ms.

c. Run reverse at 25 IPS for 30 ms.

d. Repeat steps b and c until EOT is detected.

e. Run forward at 25 IPS for 30 ms.

f. Run reverse at 25 IPS for 100 ms.

g. Repeat steps e and f until BOT is detected.

h. Go to step b.

POSSIBLE TERMINATION CODES:

10 to 69 - Refer to Fault SAM.
70 - Tape Not Loaded Fault

CE TEST 15: FORWARD 100 IPS RAMPS

TEST REQUIREMENT: Tape should be loaded.

TEST DESCRIPTION: Test 15 exercises the transport in a start/stop mode at 100 IPS in the forward direction. When EOT is detected, the same 100 IPS start/stop mode is executed in the reverse direction. When BOT is detected, the routine starts again. Manual intervention is required to terminate the test.

TEST OPTIONS: None.

TEST SEQUENCE:

a. Check if the operator door is closed and tape is loaded.

b. Run forward at 100 IPS for 500 ms.

c. Stop and Pause for 500 ms.

d. Repeat steps b and c until EOT is detected.

e. Run reverse at 100 IPS for 500 ms.

f. Stop and pause for 500 ms.

g. Repeat steps e and f until BOT is detected.

h. Go to step b.

POSSIBLE TERMINATION CODES:

10 to 69 - Refer to Fault SAM.
70 - Tape Not Loaded Fault

CE TEST 16: REVERSE 100 IPS RAMPS

TEST REQUIREMENT: Tape should be loaded.

TEST DESCRIPTION: Test 16 exercises the transport in a start/stop mode at 100 IPS in the reverse direction. When BOT is detected, the same 100 IPS start/stop mode is executed in the forward direction. When EOT is detected, the routine starts again. Manual intervention is required to terminate the test.

TEST OPTIONS: None.

TEST SEQUENCE:

a. Check if the operator door is closed and tape is loaded.

b. Run reverse at 100 IPS for 500 ms.

c. Stop and Pause for 500 ms.

d. Repeat steps b and c until BOT is detected.

e. Run reverse at 100 IPS for 500 ms.

f. Stop and pause for 500 ms.

g. Repeat steps e and f until EOT is detected.

h. Go to step b.

POSSIBLE TERMINATION CODES:

10 to 69 - Refer to Fault SAM.
70 - Tape Not Loaded Fault

CE TEST 19: REVERSE 100 IPS CONTINUOUS

TEST REQUIREMENT: Tape should be loaded.

TEST DESCRIPTION: Test 19 exercises the transport in a continuous mode at 100 IPS in the reverse direction. When BOT is detected, tape is stopped and 100 IPS continuous mode is executed in the forward direction. When EOT is detected, the routine starts again. Manual intervention is required to terminate the test.

TEST OPTIONS: None.

TEST SEQUENCE:

a. Check if the operator door is closed and tape is loaded.

b. Run reverse continuously 100 IPS until BOT is detected.

c. Stop and run forward continuously at 100 IPS until EOT is detected.

d. Stop motion and go to step b.

POSSIBLE TERMINATION CODES:

10 to 69 - Refer to Fault SAM.
70 - Tape Not Loaded Fault

CE TEST 20: FORMATTER INTERNAL DIAGNOSTICS

TEST REQUIREMENT: None.

TEST DESCRIPTION: Test 20 checks out the internal hardware of the formatter. It does not check host interface or device interface hardware.

TEST OPTIONS:
- 00 = Halt if read or write errors exceed limits specified, halt on completion of test (Default option).
- 01 = Loop on test, halt if read or write errors exceed limit specified on any given pass.
- 02 = Loop on test, bypass read or write error halts.

TEST SEQUENCE:

a. Check out programmable timer hardware.

b. Check out hardware used to write ID or file mark.

c. Check out hardware used to write or read a block of data.

d. Check out hardware used to detect dead tracks and correct errors.

e. Check out hardware used for high speed and reverse operations.

POSSIBLE TERMINATION CODES:

00 - Test is Successful
58 - Formatter Internal Diagnostic Failure

CE TEST 17: 100 IPS REPOSITIONING

TEST REQUIREMENT: Tape should be loaded.

TEST DESCRIPTION: Test 17 is a repositioning routine at 100 IPS. It repositions the tape in the forward direction. When EOT is detected, it repositions the tape in the reverse direction. When BOT is detected, the routine starts again. Manual intervention is required to terminate the test.

TEST OPTIONS: None.

TEST SEQUENCE:

a. Check if the operator door is closed and tape is loaded.

b. Run forward at 100 IPS for 1 second.

c. Run reverse at 100 IPS for 30 ms.

d. Repeat steps b and c until EOT is detected.

e. Run forward at 100 IPS for 30 ms.

f. Run reverse at 100 IPS for 1 second.

g. Repeat steps e and f until BOT is detected.

h. Go to step b.

POSSIBLE TERMINATION CODES:

10 to 69 - Refer to Fault SAM.
70 - Tape Not Loaded Fault

CE TEST 18: FORWARD 100 IPS CONTINUOUS

TEST REQUIREMENT: Tape should be loaded.

TEST DESCRIPTION: Test 18 exercises the transport in a continuous mode at 100 IPS in the forward direction. When EOT is detected, tape is stopped and 100 IPS continuous mode is executed in the reverse direction. When BOT is detected, the routine starts again. Manual intervention is required to terminate the test.

TEST OPTIONS: None.

TEST SEQUENCE:

a. Check if the operator door is closed and tape is loaded.

b. Run forward continuously 100 IPS until EOT is detected.

c. Stop and run reverse continuously at 100 IPS until BOT is detected.

d. Stop motion and go to step b.

POSSIBLE TERMINATION CODES:

10 to 69 - Refer to Fault SAM.
70 - Tape Not Loaded Fault

CE TEST 21: 25 IPS WRITE TO EOT

TEST REQUIREMENT: A write enabled scratch tape should be loaded.

TEST DESCRIPTION: Test 21 writes 2K byte records, first 256 bytes of random data and then the remaining bytes of fixed data, from the present position of the tape to EOT at 25 IPS. On detection of EOT, it rewinds and positions at BOT. If a write error occurs, the unit performs Backspace, Erase, and attempts to write again. If more than five consecutive erases are required, the test terminates with a write fault. If 16 erases are required in one complete pass, the test terminates with a write fault. All functional checks are active throughout the test.

TEST OPTIONS:

00 = Halt if read or write errors exceed limits specified, halt on completion of test (Default option).
01 = Loop on test, halt if read or write errors exceed limit specified on any given pass.
02 = Loop on test, bypass read or write error halts.

TEST SEQUENCE:

a. Write 2K byte records at 25 IPS continuous to EOT.

b. Rewind to BOT.

POSSIBLE TERMINATION CODES:

00 - Test is successful
03 - ID Check
04 - Low Speed Write Error
10 to 69 - Refer to Fault SAM.
70 - Tape Not Loaded Fault

CE TEST 22: 25 IPS READ TO EOT

TEST REQUIREMENT: A pre-written tape should be loaded.

TEST DESCRIPTION: Test 22 reads any pre-written tape from present tape position to EOT at 25 IPS. Any read error halts the test with a fault code. All functional checks are active. On detection of EOT, it rewinds and positions at BOT.

TEST OPTIONS:

00 = Halt if read or write errors exceed limits specified, halt on completion of test (Default option).
01 = Loop on test, halt if read or write errors exceed limit specified on any given pass.
02 = Loop on test, bypass read or write error halts.

TEST SEQUENCE:

a. Read records at 25 IPS continuous to EOT.

b. Rewind to BOT.

POSSIBLE TERMINATION CODES:

00 - Test is Successful
03 - ID Check
05 - Low Speed Read Error
10 to 69 - Refer to Fault SAM.
70 - Tape Not Loaded Fault

CE TEST 23: 100 IPS STREAMING WRITE TO EOT

TEST REQUIREMENT: A write enabled scratch tape should be loaded.

TEST DESCRIPTION: Test 23 writes 256 byte records, all zeros patterns, from present position of tape to EOT at 100 IPS in streaming mode. On detection of EOT, it rewinds and positions at BOT. If a write error occurs, the unit performs Backspace, Erase, and attempts to write again. If more than five consecutive erases are required, the test terminates with a write fault. If 16 erases are required in one complete pass, the test terminates with a write fault. All functional checks are active throughout the test.

TEST OPTIONS:

00 = Halt if read or write errors exceed limits specified, halt on completion of test (Default option).
01 = Loop on test, halt if read or write errors exceed limit specified on any given pass.
02 = Loop on test, bypass read or write error halts.

TEST SEQUENCE:

a. Write 256 byte records at 100 IPS streaming to EOT.

b. Rewind to BOT.

POSSIBLE TERMINATION CODES:

00 - Test is successful
03 - ID Check
06 - High Speed Write Error
10 to 69 - Refer to Fault SAM.
70 - Tape Not Loaded Fault

CE TEST 24: 100 IPS READ TO EOT

TEST REQUIREMENT: A pre-written tape should be loaded.

TEST DESCRIPTION: Test 24 reads any pre-written tape from present tape position to EOT at 100 IPS. Any read error halts the test with a fault code. All functional checks are active. On detection of EOT, it rewinds and positions at BOT.

TEST OPTIONS:

00 = Halt if read or write errors exceed limits specified, halt on completion of test (Default option).
01 = Loop on test, halt if read or write errors exceed limit specified on any given pass.
02 = Loop on test, bypass read or write error halts.

TEST SEQUENCE:

a. Read records at 100 IPS streaming to EOT.

b. Rewind to BOT.

POSSIBLE TERMINATION CODES:

00 - Test is Successful
03 - ID Check
07 - High Speed Read Error
10 to 69 - Refer to Fault SAM.
70 - Tape Not Loaded Fault

CE TEST 28: PERFORM COMMAND STACK AT 25 IPS START/STOP

TEST REQUIREMENT:

a. If a write-type operation is desired, a write enabled scratch tape should be loaded.

b. If a read-type operation is desired, a pre-recorded tape should be loaded.

TEST DESCRIPTION: Test 28 performs the three-level command stack entered by Test 97. If option 01 is entered, the stack will be repeated until EOT or BOT is detected. If write operation is being performed upon an error, a Backspace, Erase, and Rewrite is performed. If read operation is being performed, any uncorrectable read error will cause the test to fail with a read fault. All functional checks are active throughout the test.

TEST OPTIONS:

00 = Halt if read or write errors exceed limits specified, halt on completion of test (Default option).
01 = Loop on test, halt if read or write errors exceed limit specified on any given pass.
02 = Loop on test, bypass read or write error halts.

POSSIBLE TERMINATION CODES:

00 - Test is Successful
03 - ID Check
04 - Low Speed Write Error
05 - Low Speed Read Error
10 to 69 - Refer to Fault SAM
70 - Tape Not Loaded Fault

CE TEST 29: PERFORM COMMAND STACK AT 100 IPS THRASHING

TEST REQUIREMENT:

a. If a write-type operation is desired, a write enabled scratch tape should be loaded.

b. If read-type operation is desired, a pre-recorded tape should be loaded.

TEST DESCRIPTION: Test 29 performs the three-level command stack entered by Test 97. If option 01 is entered, the stack will be repeated until EOT or BOT is detected. If write operation is being performed upon an error, a Backspace, Erase, and Rewrite is performed. If read operation is being performed, any uncorrectable read error will cause the test to fail with a read fault. All functional checks are active throughout the test.

TEST OPTIONS:

00 = Halt if read or write errors exceed limits specified, halt on completion of test (Default option).
01 = Loop on test, halt if read or write errors exceed limit specified on any given pass.
02 = Loop on test, bypass read or write error halts.

POSSIBLE TERMINATION CODES:

00 - Test is Successful
03 - ID Check
06 - High Speed Write Error
07 - High Speed Read Error
10 to 69 - Refer to Fault SAM
70 - Tape Not Loaded Fault

CE TEST 30: CHECK READ AMPLITUDES AT 25 AND 100 IPS WITH TOLERANCE OF + 0.8 VOLTS

TEST REQUIREMENT: Tape should be loaded and not write protected, and should not be near EOT.

TEST DESCRIPTION: Test 30 checks that read amplitudes at 25 AND 100 IPS are 1.5 ± 0.8 volts. For 25 IPS, the minimum read amplifier gain value is determined for each track, such that the peak-to-peak voltage at the analog test point is 1.5 volts. This generates an envelope signal for that track. If, at the end of the test, an envelope is not detected for any track, a fault is reported. The gain determined for each track is compared to corresponding gain value stored in the back-up memory (determined by Test 31). If the difference for any track is such, that it causes an amplitude difference of 0.8 volts, a fault is reported. All CE options are available for the test.

The same operation is carried out for 100 IPS.

TEST OPTIONS: None.

TEST SEQUENCE:

a. Check if the operator door is closed, tape is not write protected, tape is loaded and not at EOT.

b. Calculate the minimum read gain values for all tracks for 25 IPS as described.

c. Display Fault Code 01 if an envelope is not detected in track at the end of the test.

d. Display Fault Code 02 if the difference in gain, between that determined and the corresponding value stored in the back-up memory for any track, is such that it causes an amplitude difference of 0.8 volts.

e. Execute steps b, c, and d for 100 IPS.

f. Display Termination Code 00 if complete test is successful.

CE TEST 30: (Cont'd)

POSSIBLE TERMINATION CODES:

00 - Test Is Successful
01 - EGC Envelope Fault
02 - EGC Wear Tolerance Fault
10 to 69 - Refer to Fault SAM
70 - Tape Not Loaded Fault
72 - Tape Write Protected Fault
77 - EOT On EGC Fault

NOTE: CE Test 30 is a part of Operator Test 1.

CE TEST 31: SET UP AND CHECK READ AMPLITUDES AT 25 AND 100 IPS

TEST REQUIREMENT: Tape should be loaded and not write protected, and should not be near EOT. Jumper to the back-up memory should be in W4 ("STORE") position.

TEST DESCRIPTION: Test 31 sets up and checks the read amplitudes at 25 and 100 IPS. For 25 IPS, it determines the minimum gain value for each track, in the same manner as described in Test 30, and stores them in the back-up memory. It again determines the minimum gain value for each track and compares it to the previously stored value. If the difference in gain between the two values for any track is such that it causes an amplitude difference of 0.1 volts, the test is repeated. Also, if any fault is detected while determining the minimum gain values, the test is repeated. If, after 5 attempts, the operation is not successful, a fault is reported.

The same operation is carried out for 100 IPS.

TEST OPTIONS: None.

TEST SEQUENCE:

a. Check if the operator door is closed, tape is not write protected, tape is loaded, and tape is not at EOT.

b. Determine the minimum gain values for 25 IPS and store them in the back-up memory. Report a fault if the jumper on the back-up memory is not in the W4 ("STORE") position.

c. Determine the minimum gain values for 25 ips and compare them with the previously stored values. If, for any track, the difference is such that it causes an amplitude difference greater than 0.1 volts, the test is repeated.

d. If, while determining the minimum gain values in steps b and c, a fault is detected, the test is repeated.

e. If, after five tries, the test is still not successful, terminate the test with Termination Code 78.

CE TEST 31: (Cont'd)

f. Execute steps b, c, and d for 100 IPS. If test is not successful after five tries, display Termination Code 79.

g. Display Termination Code 00 if complete test is successful.

POSSIBLE TERMINATION CODES:

00 - Test Is Successful
10 to 69 - Refer to Fault SAM
70 - Tape Not Loaded Fault
72 - Tape Write Protected Fault
78 - EGC Low Speed Set-Up Failure
79 - EGC High Speed Set-Up Failure
99 - Attempt to Loop on Test

NOTE 1: After completing the test, replace the jumper to the back-up memory from the W4 ("STORE") position to the W3 position before powering down the STU.

NOTE 2: Loop on test option is not permitted with this test.

NOTE 3: Make certain resistors R224 and R225 are moved from old PWA to replacement PWA. Move jumper plug at location 13E on Read-Write-Servo PWA from normal W3 to Test W4 - Store position. With tape not threaded, execute Field Service Tests 37 and 48. Load known good quality write enabled tape. Execute Field Service Test 18 to move tape away from BOT. Press RESET to stop tape motion. Execute Field Service Test 31. After test is complete (display 00), return jumper plug to W3 position. With tape threaded, but not loaded, execute Operator Test 01.

CE TEST 32: CHECK READ AMPLITUDES AT 25 AND 100 IPS

TEST REQUIREMENT: Tape should be loaded and pre-written with all 1's, and should not be near EOT.

TEST DESCRIPTION: Test 32 checks that read amplitudes at 25 and 100 IPS are 1.5 $\pm$ 0.3 volts, with pre-written tape of all 1's. This test is similar to Test 30 except that it requires pre-written tape and the tolerance value is $\pm$ 0.3 volts instead of 0.8 volts.

TEST OPTIONS:

00 = Halt if read or write errors exceed limits specified, halt on completion of test (Default option).
01 = Loop on test, halt if read or write errors exceed limit specified on any given pass.
02 = Loop on test, bypass read or write error halts.

POSSIBLE TERMINATION CODES:

00 - Test Is Successful
01 - EGC Envelope Fault
02 - EGC Wear Tolerance Fault
10 to 69 - Refer to Fault SAM
70 - Tape Not Loaded Fault
77 - EOT On EGC Fault

CE TEST 33: SET UP READ AMPLITUDES AT 25 IPS

TEST REQUIREMENT: Tape should be loaded and not write protected, and should not be near EOT. Jumper to the back-up memory should be in the W4 ("STORE") position.

TEST DESCRIPTION: Test 33 determines and stores the read gains at 25 IPS. This test is similar to Test 31 except it is done only at 25 IPS, and whenever a fault is detected, the test is terminated and the fault is reported.

TEST OPTIONS: None.

POSSIBLE TERMINATION CODES:

00 - Test Is Successful
01 - EGC Envelope Fault
10 to 69 - Refer to Fault SAM
70 - Tape Not Loaded Fault
72 - Tape Write Protected Fault
73, 74 - Back Up Memory Not Write Enabled
75, 76 - Bad Back Up Memory
77 - EOT On EGC Fault
99 - Attempt to Loop on Test

NOTE 1: After completing the test, replace the jumper to the back-up memory from the W4 ("STORE") position to the W3 position before powering down the STU.

NOTE 2: Loop on test option is not permitted with this test.

CE TEST 34: SET UP READ AMPLITUDES AT 100 IPS

TEST REQUIREMENT: Tape should be loaded and not write protected, and should not be near EOT. Jumper on the back-up memory should be in the W4 ("STORE") position.

TEST DESCRIPTION: Test 34 determines and stores the read gains at 100 IPS. This test is similar to Test 31 except it is done only at 100 IPS, and whenever a fault is detected, the test is terminated and the fault is reported.

TEST OPTIONS: None.

POSSIBLE TERMINATION CODES:

00 - Test Is Successful
01 - EGC Envelope Fault
10 to 69 - Refer to Fault SAM.
70 - Tape Not Loaded Fault
72 - Tape Write Protected Fault
73, 74 - Back Up Memory Not Write Enabled
75, 76 - Bad Back Up Memory
77 - EOT On EGC Fault
99 - Attempt to Loop on Test

NOTE 1: After completing the test, replace the jumper to the back-up memory from the W4 ("STORE") position to the W3 position before powering down the STU.

NOTE 2: Loop on test is not permitted with this test.

TEST 37: SET UP VELOCITY CORRECTION MULTIPLIER

TEST REQUIREMENT: Tape should not be threaded. Jumper to the back-up memory (on Read-Write-Servo Module) should be in the W4 ("STORE") position.

TEST DESCRIPTION: Test 37 sets up the velocity correction multiplier for the velocity DAC.

TEST OPTIONS: None.

TEST SEQUENCE:

a. Check if the top cover door is closed and tape is absent.

b. Move take-up reel forward at about 19 IPS velocity (for BOT radius).

c. Calculate velocity correction multiplier for velocity DAC.

d. Display Termination Code 93 if velocity correction multiplier is out of range.

e. Stop take-up reel and store velocity correction multiplier in back-up memory.

f. Display Termination Code 00 if complete test is successful.

POSSIBLE TERMINATION CODES:

00 - Test Is Successful
10 to 69 - Refer to respective Troubleshooting Procedure
73, 74 - Back Up Memory Not Write Enabled
75, 76 - Bad Back Up Memory
93 - Velocity Correction Multiplier Factor Out of Range
94 - Tape Present Fault
99 - Attempt to Loop on Test

NOTE 1: Upon successful completion of this test, CE Test 48 should be initiated to set up pump power-down timer.

NOTE 2: After completing the test, replace the jumper to the back-up memory from the W4 ("STORE") position to the W3 operating position before powering down the transport.

CE TEST 38: PULSE FILE REEL AT 8 OUNCES

TEST REQUIREMENT: Tape (10.5 inch reel) should be threaded close to BOT without any loop.

TEST DESCRIPTION: This test puts the take-up reel in Stoplock. It pulses the file reel in the reverse direction to maintain approximately 8 ounces of tension. Manual intervention is required to terminate the test.

TEST OPTIONS: None.

TEST SEQUENCE:

a. Check if the operator door is closed and tape is present.

b. Put take-up reel in Stoplock.

c. Turn on pump.

d. Pulse the file reel.

POSSIBLE TERMINATION CODES:

10 to 69 - Refer to Fault SAM.
71 - Tape Loaded Fault

CE TEST 39: WRITE ALL 1'S TO EOT AT 25 IPS

TEST REQUIRMENT: Tape should be loaded and not write protected.

TEST DESCRIPTION: Test 39 writes tape with all 1's at 25 IPS to EOT. At EOT, tape is rewound to BOT. All CE options are available for the test.

TEST OPTIONS:

00 = Halt if read or write errors exceed limits specified, halt on completion of test (Default option).
01 = Loop on test, halt if read or write errors exceed limit specified on any given pass.
02 = Loop on test, bypass read or write error halts.

TEST SEQUENCE:

a. Check if the operator door is closed.

b. Check if tape is loaded and not write protected.

c. Write all 1's to EOT at 25 IPS.

d. Rewind to BOT.

e. Display Termination Code 00 if test is successful.

POSSIBLE TERMINATION CODES:

00 - Test Is Successful
10 to 69 - Refer to Fault SAM
70 - Tape Not Loaded Fault
72 - Tape Write Protected Fault

CE TEST 40: WRITE ALL 1'S TO EOT AT 100 IPS

TEST REQUIREMENT: Tape should be loaded and not write protected.

TEST DESCRIPTION: Test 40 writes tape with all 1's at 100 IPS to EOT. First, it checks if tape is not write protected. It then writes all 1's at 100 IPS to EOT. At EOT, it is rewound to BOT.

TEST OPTIONS:

00 = Halt if read or write errors exceed limits specified, halt on completion of test (Default option).
01 = Loop on test, halt if read or write errors exceed limit specified on any given pass.
02 = Loop on test, bypass read or write error halts.

TEST SEQUENCE:

a. Check if the operator door is closed.

b. Check if tape is loaded and not write protected.

c. Write all 1's to EOT at 100 IPS.

d. Rewind to BOT.

e. Display Fault Code 00 if test is successful.

POSSIBLE TERMINATION CODES:

00 - Test Is Successful
10 to 69 - Refer to Fault SAM
70 - Tape Not Loaded Fault
72 - Tape Write Protected Fault

CE TEST 41: STOPLOCK TAKE-UP REEL

TEST REQUIREMENT: Tape should not be loaded.

TEST DESCRIPTION: Test 41 checks the stoplock mode of the take-up reel servo. Manual intervention is required to terminate the test.

TEST OPTIONS: None.

TEST SEQUENCE:

a. Check if the operator door is closed.

b. Put take-up reel servo in stoplock mode.

POSSIBLE TERMINATION CODES:

10 to 69 - Refer to Fault SAM.
71 - Tape Loaded Fault

CE TEST 42: ENABLE TENSION SERVO

TEST REQUIREMENT: Tape should be threaded.

Tape slack should be removed to allow File Servo to be enabled.

TEST DESCRIPTION: Test 42 allows tape tension to be checked via the tension servo. It produces 8 ounces of tension by enabling tension servo.

TEST OPTIONS: None.

TEST SEQUENCE:

a. Check if the operator door is closed. If tape is absent, go to step d.

b. Take up slack in tape by slowly moving take-up reel in reverse direction until tension is reached.

c. Enable tension servo operation at 8 ounces.

d. If tape is pulled out of tape path, display Termination Code 00.

POSSIBLE TERMINATION CODES:

00 - Test Is Successful
10 to 69 - Refer to Fault SAM.
71 - Tape Loaded Fault

CE TEST 43: TURN ON PUMP

TEST REQUIREMENT: Tape should not be loaded.

TEST DESCRIPTION: Test 43 turns on the pump. Manual intervention is required to terminate the test.

TEST OPTIONS: None.

TEST SEQUENCE:

a. Check if the operator door is closed and tape is not loaded.

b. Turn on pump.

POSSIBLE TERMINATION CODES:

10 to 69 - Refer to Fault SAM.
71 - Tape Loaded Fault

CE TEST 44: FAST FORWARD TO EOT

TEST REQUIREMENT: Tape should be loaded.

TEST DESCRIPTION: Test 44 moves tape forward at rewind speed to EOT.

TEST OPTIONS: None.

TEST SEQUENCE:

a. Check if the operator door is closed and tape is loaded.

b. Gradually increase speed and then maintain rewind speed.

c. Wait until EOT is detected.

d. Stop motion and display Termination Code 00.

POSSIBLE TERMINATION CODES:

00 - Test Is Successful
10 to 69 - Refer to Fault SAM.
70 - Tape Not Loaded Fault

CE TEST 45: EGC DAC SCOPE LOOP

TEST REQUIREMENT: Tape should not be loaded.

TEST DESCRIPTION: Test 45 exercises the EGC DAC on the Read/Write/Servo PWA. Use TP 12 as a sync point and observe output at TP 14. If EGC DAC is operational, a triangle waveform of 35 ms period will be observed on the scope. Manual termination is required to terminate the test.

TEST OPTIONS: None.

TEST SEQUENCE:

a. Check if the operator door is closed.

b. Issue a trigger signal at TP 12.

c. Output zero voltage at TP 14 through EGC DAC, and increase it by 20 mv at every 60 microseconds (approximate) until it reaches 5 volts.

d. Decrease output at TP 14 through EGC DAC by 20 mv at every 60 microseconds (approximate) until it reaches 0 volt.

e. Go to step b.

POSSIBLE TERMINATION CODES:

10 to 69 - Refer to Fault SAM.
71 - Tape Loaded Fault

CE TEST 46: VELOCITY DAC SCOPE LOOP

TEST REQUIREMENT: Tape should not be loaded.

TEST DESCRIPTION: Test 46 exercises the Velocity DAC on the Read/Write/Servo PWA. Use TP 12 as a sync point and observe output at TP 13 on the scope. If Velocity DAC is operational, a triangle waveform of 35 ms period will be observed on the scope. Manual termination is required to terminate the test.

TEST OPTIONS: None.

TEST SEQUENCE:

a. Check if the operator door is closed.

b. Issue a trigger signal at TP 12.

c. Output zero voltage at TP 13 through Velocity DAC, and increase it by 20 mv at every 60 microseconds (approximate) until it reaches 6.9 volts.

d. Decrease output at TP 13 through Velocity DAC by 20 mv at every 60 microseconds (approximate) until it reaches 0 volt.

e. Go to step b.

POSSIBLE TERMINATION CODES:

10 to 69 - Refer to Fault SAM.
71 - Tape Loaded Fault

CE TEST 47: READ/WRITE/SERVO MICROPROCESSOR OUTPUTS SCOPE LOOP

TEST REQUIREMENT: Tape should not be loaded.

TEST DESCRIPTION: Test 47 generates a pulse of 50 microseconds every 5 ms on each of the addressable outputs of the Read/Write/Servo PWA. Manual intervention is required to terminate the test.

TEST OPTIONS: None.

TEST SEQUENCE:

a. Check if the operator door is closed and tape is not present.

b. Generate a 50 microsecond pulse every 5 ms on each of the addressable outputs of Read/Write/Servo microprocessor.

POSSIBLE TERMINATION CODES:

10 to 69 - Refer to Fault SAM.
94 - Tape Present Fault

CE TEST 48: SET UP PUMP POWER-DOWN TIMER

TEST REQUIREMENT: Tape should not be threaded. Jumper to the backup memory (on the Read-Write-Servo module) should be in the W4 ("STORE") position.

TEST DESCRIPTION: Test 48 sets up the pump power-down timer for one minute if no tape motion has occurred.

TEST OPTIONS: None.

POSSIBLE TERMINATION CODES:

00 - Test is successful
73, 74 - Backup memory is not write enabled.
75, 76 - Bad backup memory
94 - Tape Present Fault

NOTE 1: After completing the test, replace the jumper to the back-up memory from the W4 ("STORE") position to the W3 operating position before powering down the transport.

NOTE 2: To disable the pump power-down timer, run CE Test 37.

CE TEST 50: 25 IPS FORWARD STREAMING RAMPS

TEST REQUIREMENT: Tape should be loaded.

TEST DESCRIPTION: Test 50 exercises the transport in a start/stop mode at 25 ips using the streaming ramps in the forward direction. When EOT is detected, the same 25 ips mode is executed in the reverse direction. When BOT is detected, the routine starts again. Manual intervention is required to terminate the test.

TEST OPTIONS: None.

TEST SEQUENCE:

a. Check if the operator door is closed and tape is loaded.

b. Ramp up to 25 ips using streaming ramp and run for ms.

c. Stop using streaming ramp and pause for ms.

d. Repeat steps b and c until EOT is detected.

e. Ramp up to 25 ips in reverse direction and run for ms.

f. Stop and pause for ms.

g. Repeat steps e and f until BOT is detected.

n. Go to step b.

POSSIBLE TERMINATION CODES:

10 to 69 - Refer to Fault SAM
70 - Tape Not Loaded Fault

CE TEST 51: 25 IPS REVERSE STREAMING RAMPS

TEST REQUIREMENT: Tape should be loaded.

TEST DESCRIPTION: Test 51 exercises the transport in a start/stop mode at 25 ips using the streaming ramps in the reverse direction. When BOT is detected, the same 25 ips mode is executed in the forward direction. When EOT is detected, the routine starts again. Manual intervention is required to terminate the test.

TEST OPTIONS: None.

TEST SEQUENCE:

a. Check if the operator door is closed and tape is loaded.

b. Ramp up to 25 ips using streaming ramp and run for ms.

c. Stop using streaming ramp and pause for ms.

d. Repeat steps b and c until BOT is detected.

e. Ramp up to 25 ips in forward direction and run for ms.

f. Stop and pause for ms.

g. Repeat steps e and f until EOT is detected.

h. Go to step b.

POSSIBLE TERMINATION CODES:

10 to 69 - Refer to Fault SAM
70 - Tape Not Loaded Fault

CE TEST 61: TAKE-UP MOTOR AND POWER AMP FULL CAPABILITY DETECTION TEST

TEST REQUIREMENT: Tape should not be threaded.

TEST DESCRIPTION: Test 61 checks out whether take-up motor performance is within range or not. It also checks out whether take-up section of the power amp is capable of delivering full current or not.

TEST OPTIONS: None.

TEST SEQUENCE:

a. Check if the operator door is closed and tape is absent.

b. Apply diagnostic lines to move take-up motor in forward direction from 0 to 100 IPS, and measure time it requires to ramp-up. Stop take-up motor.

c. Calculate motor constant from this data.

d. If motor constant is within range, go to step e. If motor constant is out of range the first time, repeat steps b and c. Otherwise, display Termination Code 84.

e. Apply full current to move take-up motor in forward direction from 0 to 100 IPS, and measure time it requires to ramp-up. Stop take-up motor.

f. If power amp is not capable of delivering full current in forward direction, flag a fault, otherwise, go to step h.

g. If fault is the first time, repeat steps e and f, otherwise, display Termination Code 82.

h. Apply full current to move take-up motor in reverse direction from 0 to 100 IPS, and measure time it requires to ramp-up. Stop take-up motor.

i. If power amp is not capable of delivering full current in reverse direction, flag a fault, otherwise, go to step k.

j. If fault is the first time, repeat steps h and i, otherwise, display Termination Code 82.

k. Display Termination Code 00 to indicate successful completion of test.

CE TEST 61: (Cont'd)

POSSIBLE TERMINATION CODES:

00 - Test Is Successful
10 to 69 - Refer to Fault SAM.
82 - Take-Up Power Amp Fault
84 - Take-Up Motor/Tach Fault
94 - Tape Present Fault

CE TEST 62: TAKE-UP FINE TACH FAULT DETECTION

TEST REQUIREMENT: Tape should not be threaded.

TEST DESCRIPTION: Test 62 checks that the distance between two consecutive quarter tachs (derived from fine line tachs at the take-up motor) is within tolerable limits.

TEST OPTIONS: None.

TEST SEQUENCE:

a. Check if the operator door is closed and tape is absent.

b. Ramp up to 4 IPS.

c. Check if distance between two consecutive quarter tachs is within tolerable limits.

d. If, after five tries, at least once, the distance between two consecutive quarter tachs is within limits, go to step f.

e. Display Termination Code 96.

f. Check that the distance between all consecutive quarter tachs is within tolerable limits.

g. If distance between any two consecutive quarter tachs is not within limits, report fault, otherwise, go to step i.

h. Repeat steps e and f. If the error is detected five times, display Termination Code 84.

i. Display Termination Code 00 to indicate successful completion of test.

POSSIBLE TERMINATION CODES:

00 - Test Is Successful
10 to 69 - Refer to Fault SAM.
84 - Take-Up Motor/Tach Fault
94 - Tape Present Fault
95 - Formatter Interrupt received while test in progress.
96 - Servo Loop Fault

CE TEST 91: FUNCTIONAL FAULT DETECTION TEST

TEST REQUIRMENT: A write enabled scratch tape should be loaded.

TEST DESCRIPTION: Test 91 performs those functions that the STU would normally perform during functional operations. Unit halts with the appropriate error code, if a functional fault occurs.

TEST OPTIONS:
- 00 = Halt if read or write errors exceed limits specified, halt on completion of test (Default option).
- 01 = Loop on test, halt if read or write errors exceed limit specified on any given pass.
- 02 = Loop on test, bypass read or write error halts.

TEST SEQUENCE:

a. If tape is unloaded then load tape, otherwise, rewind tape.

b. Write 100 blocks at 25 IPS start/stop (NOTE 1).

c. Space Reverse, Erase, Write File Mark (check for File Mark Detect), Space Reverse (check for File Mark Detect), Read Forward, Read Reverse (check for File Mark Detect).

d. Read reverse 100 blocks previously written at 25 IPS start/stop mode.

e. Read forward 2 blocks at 25 IPS start/stop mode.

f. Check gap lengths twice.

g. Read forward 94 blocks at 25 IPS start/stop mode.

h. Repeat steps d to i at 25 IPS continuous mode.

i. Repeat steps d to i at 100 IPS start/stop mode.

j. Change speed from high to low and then low to high.

k. Write 100 blocks at 100 IPS "thrashing" (NOTE 2).

l. Space reverse 10 blocks at 100 IPS "thrashing".

m. Read forward 10 blocks at 100 IPS "thrashing".

n. Rewind.

CE TEST 91: (Cont'd)

o. Speed mode change.

p. Read forward 200 blocks at 100 IPS streaming (check for File Mark Detect).

q. Write to EOT at 100 IPS streaming (NOTE 2).

r. Space reverse 200 blocks at 100 IPS streaming.

s. Read forward 10 blocks at 100 IPS "thrasning".

t. Read forward 20 blocks at 25 IPS start/stop mode.

u. Read reverse 20 blocks at 25 IPS start/stop mode.

v. Rewind.

NOTE 1: Data blocks written at 25 IPS are 2K bytes with the first 256 bytes "random" and remaining bytes of fixed pattern.

NOTE 2: Data blocks written at 100 IPS are 256 bytes of all zeros.

POSSIBLE TERMINATION CODES:

00 - Test is Successful
01 - Read Envelope Fault
02 - Read Amplitude Range Fault
03 - ID Check
04 - Low Speed Write Error
05 - Low Speed Read Error
06 - High Speed Write Error
07 - High Speed Read Error
08 - Noise In IBG
10 to 69 - Refer to Fault SAM.

CE TEST 97: READ/WRITE COMMAND STACK

TEST REQUIREMENT: None.

TEST DESCRIPTION: Test 97 allows the CE to set up a command stack using Read, Write, Space, and Erase commands. Up to three commands can be entered. The commands available are:

Read Forward - 00
Read Reverse - 80
Space Forward - 08
Space Reverse - 88
Write - 40
Erase - 58
No-Op - 70 (included to allow "in-place" analysis)
Write File Mark - 50
Rewind - 74
Speed Change - 04

TEST OPTIONS: None.

TEST SEQUENCE:

a. Set up for test 97 and depress EXECUTE.

b. Display goes to "00" - enter first desired command using STEP and TEST (to multiply by 10) and depress EXECUTE.

c. Repeat step b two more times to enter second and third commands.

d. After third entry, display goes to "00" and fault indicator will illuminate. Test is terminated.

REMOVAL/REPLACEMENT PROCEDURES

GENERAL

This section of the manual provides information for the removal and replacement of all parts or assemblies as defined in the spare parts list. In addition, a verification test follows each of the replacement procedures. The reader should be thoroughly familiar with the operation of the STU and with the diagnostic test procedures.

It is assumed that any part or assembly being replaced has been determined to be defective. If an adjustment procedure is included as part of the procedure, then the adjustment must be attempted before a part or assembly is replaced. In addition, the adjustment must also be performed following the replacement procedure.

Parts, assemblies, and locations are referenced by the STU Component Location, sheets 1 through 3.

Unless otherwise specified, all procedures assume that tape has been unloaded, the transport is powered down, and the input power cord is disconnected.

Table 6-17. REMOVAL/REPLACEMENT INDEX

TITLE	PAGE	TITLE	PAGE
Tape Cleaner Assembly	6-160	Air Bearing Spring Guides	6-175
Platform		Pneumatic Pump Assembly	6-177
Blade and Housing		Pressure Regulator Filter	6-178
Door Interlock Switch	6-161	Magnetic Head Assembly	6-181
File Protect Sensor	6-162	Operator Panel Assembly	6-185
EOT/BOT Sensor Assembly	6-163	Cooling Fan Assembly	6-186
Take-Up Reel Assembly		Power Supply Assembly	6-187
Hub Assembly	6-165		
Motor Assembly	6-166		
		Printed Wire Assemblies	
Supply Reel Assembly		Read-Write-Servo	6-189
Hub Assembly	6-167	Formatter/Control	6-191
Motor Assembly	6-169	Power Amplifier	6-192
Supply Motor Tach and Sensor	6-172		
		Capacitor Assembly (units with Acoustic Shield Assembly)	6-193
Air Bearing Transducers	6-173	Acoustic Shield Assembly	6-195
		Drive Cover	6-197
		Capacitor Assembly (units with Drive Cover)	6-198

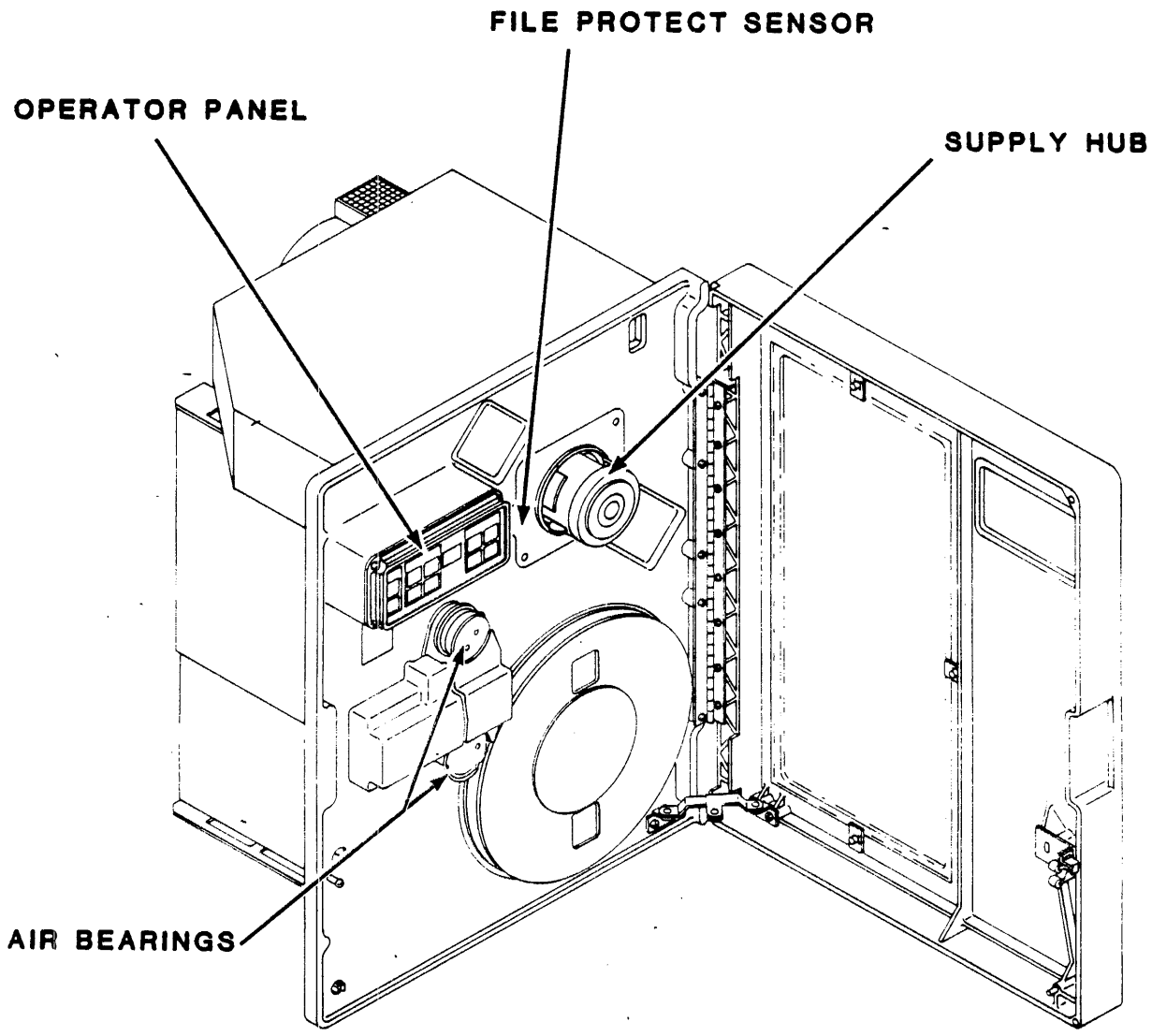

Figure 6-5. STU COMPONENT LOCATION (Sheet 1 of 3)

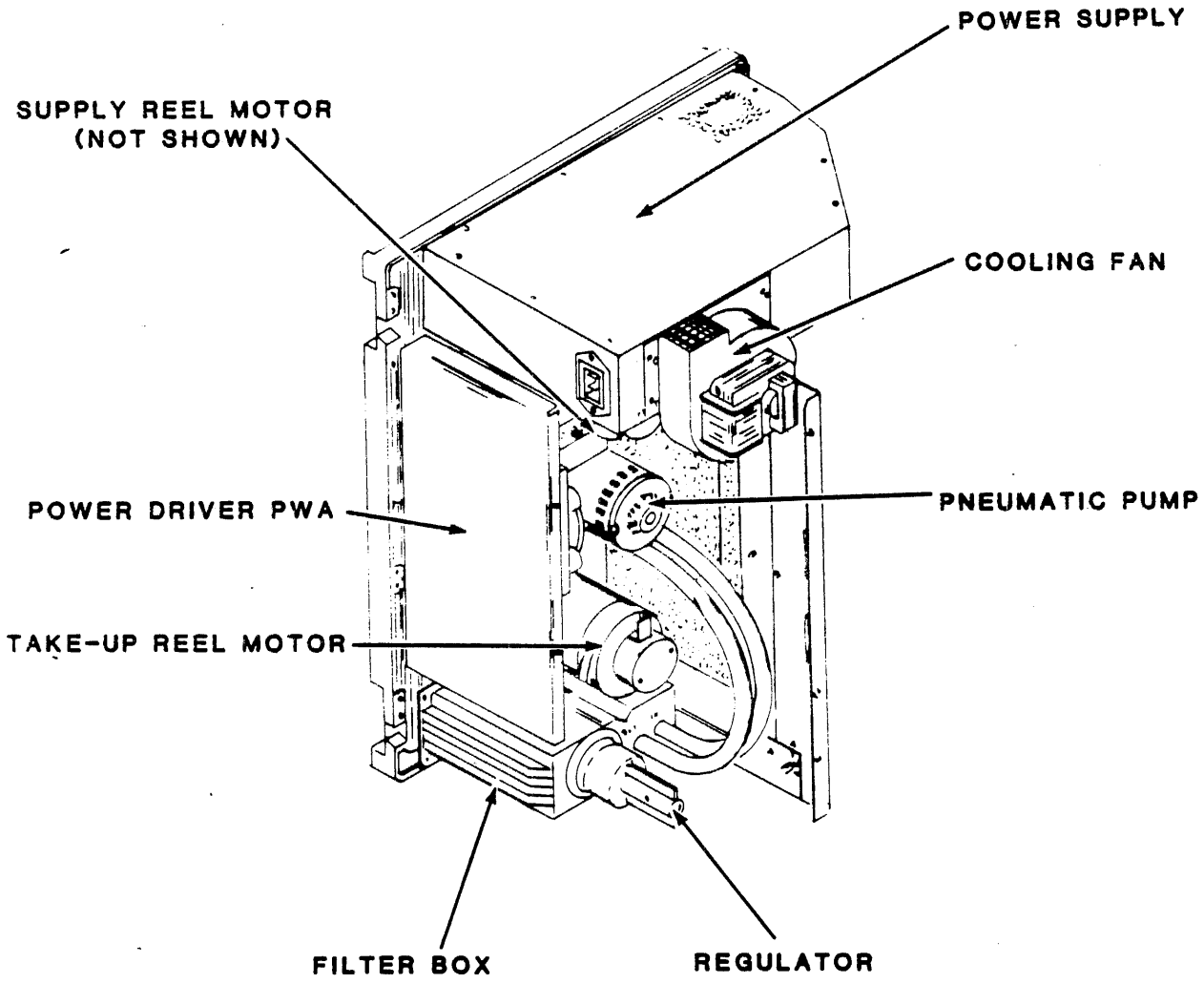

Figure 6-5. STU COMPONENT LOCATION (Sheet 2 of 3)

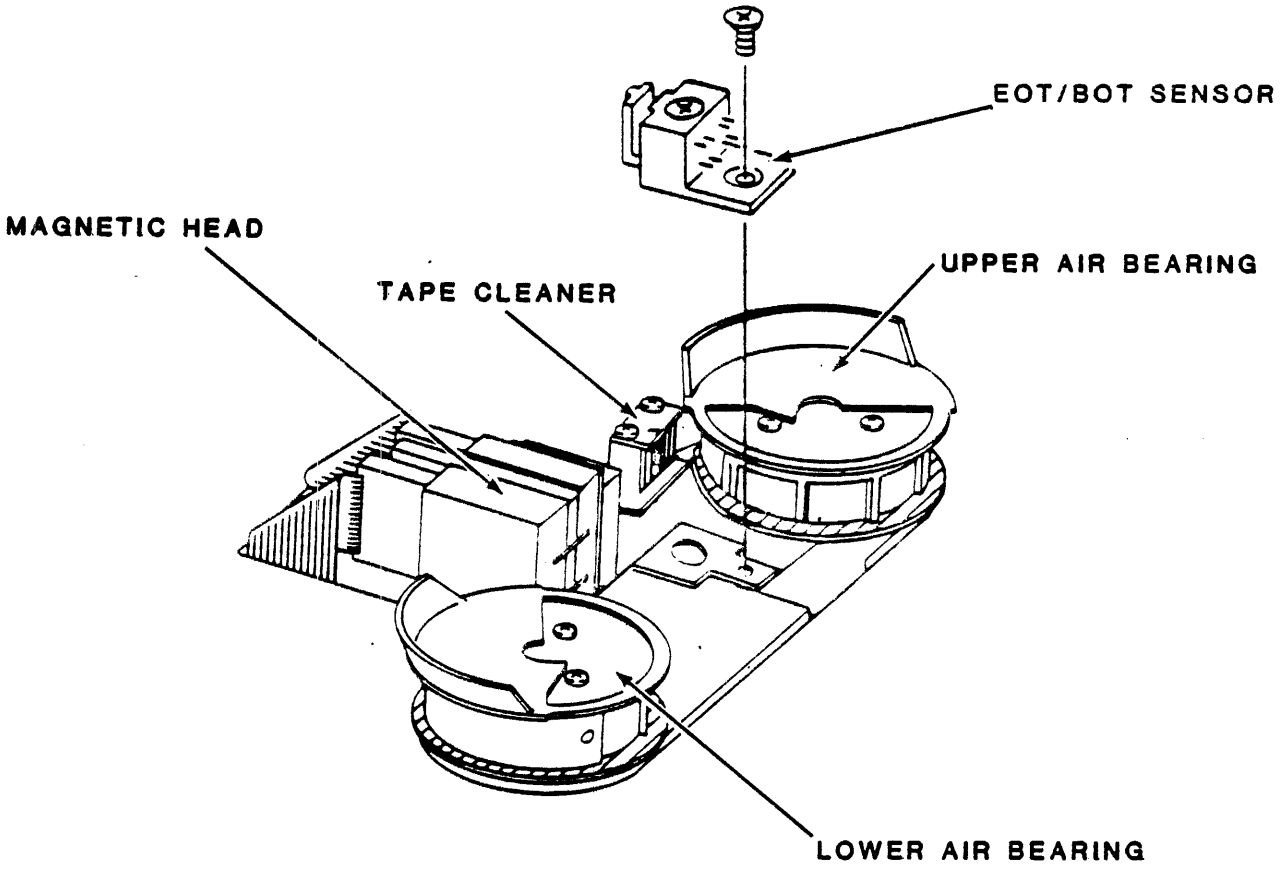

Figure 6-5. STU COMPONENT LOCATION (Sheet 3 of 3)

TAPE CLEANER ASSEMBLY

Removal

1. Remove head cover from tape deck.
2. Loosen two pan head screws and remove cleaner assembly from tape deck.
3. Remove screws, lockwashers, and cover plate from blade housing.
4. Slide platform assembly out from tape cleaner assembly.

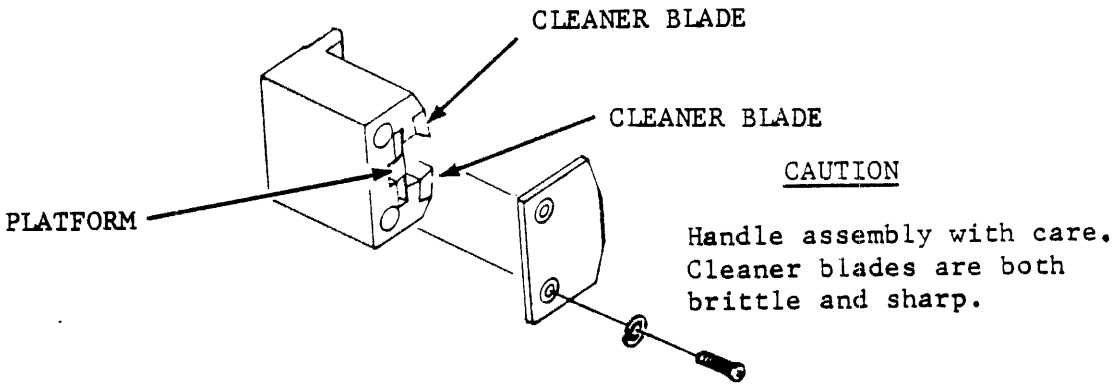

Figure 6-6. TAPE CLEANER

NOTE

Defective tape cleaner must be replaced as a complete assembly.

Replacement

6. Inspect cleaner blades for damage. If blades are chipped or damaged, replace entire assembly.
2. If blades are not damaged, clean platform and reinstall. When installing platform, ensure flanges are such that platform fits firmly inside cleaner assembly.
3. Install cover plate, two washers and mounting screws.
4. Position assembly onto guide pins on tape deck and secure screws.
5. Reinstall head cover.

Verification Check

1. No functional checks are necessary.

DOOR INTERLOCK SWITCH

Removal

1. At the rear of the tape deck, remove four labeled slip-on connectors from interlock switch connectors. (If any wires are not labeled, identify and mark each wire for reassembly.)

2. Remove two hex head screws securing switch plate to tape deck. Remove switch and switch plate.

3. Depress top and bottom release tabs on switch to separate switch from switch plate.

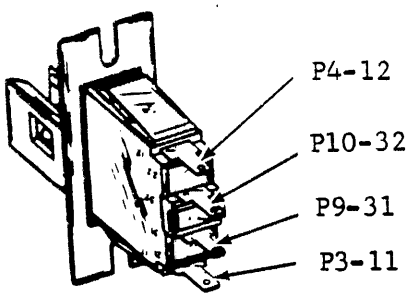

Figure 6-7. DOOR INTERLOCK SWITCH (REAR VIEW)

Replacement

1. Assemble switch to switch plate.

2. Position switch assembly on the rear of the tape deck so that connector numbers on switch correspond to numbers stencilled on tape deck.

3. Insert two hex mounting screws. Position front dust cover door so that interlock switch can be aligned with actuating stud on door. Tighten switch mounting screws when center of switch front is aligned with actuating stud.

4. Attach slip-on connectors to appropriate studs of interlock switch. Refer to figure for wire and connector positions.

Verification Check

1. With tape threaded, but not loaded, execute Operator Test 01. If test is successful, test will terminate with display 00. If test is unsuccessful, refer display number to corresponding Fault SAM.

FILE PROTECT SENSOR

Removal

1. Remove tape reel from supply hub.

2. Remove four mounting screws and file protect sensor cover plate from tape deck.

3. Remove mounting screw and washer securing file protect sensor to tape deck.

4. Detach connector W3P6 from sensor and discard sensor.

Replacement

NOTE

Refer to Figure 6-8 for sensor alignment and cable plug connection.

1. Place sensor on tape deck and secure with mounting screw and washer.

2. Attach cable plug W3P6 to sensor pins.

3. Reinstall sensor cover plate and secure to tape deck with four mounting screws.

Verification Check

1. Perform SAM 1003 to verify operation of file protect sensor circuit.

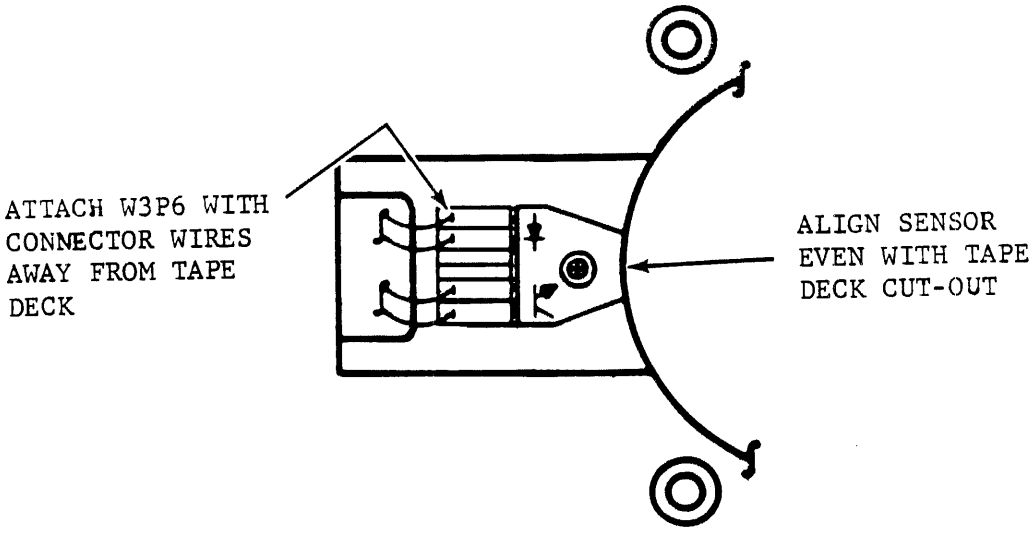

Figure 6-8. FILE PROTECT SENSOR ALIGNMENT

EOT/BOT SENSOR ASSEMBLY

Removal

1. Remove head covers from tape deck.
2. Disconnect W3P1 plug from EOT/BOT assembly.
3. Remove black flat head phillips mounting screw from assembly base-mount and remove assembly from tape deck.

NOTE

Defective sensor must be replaced as a complete assembly.

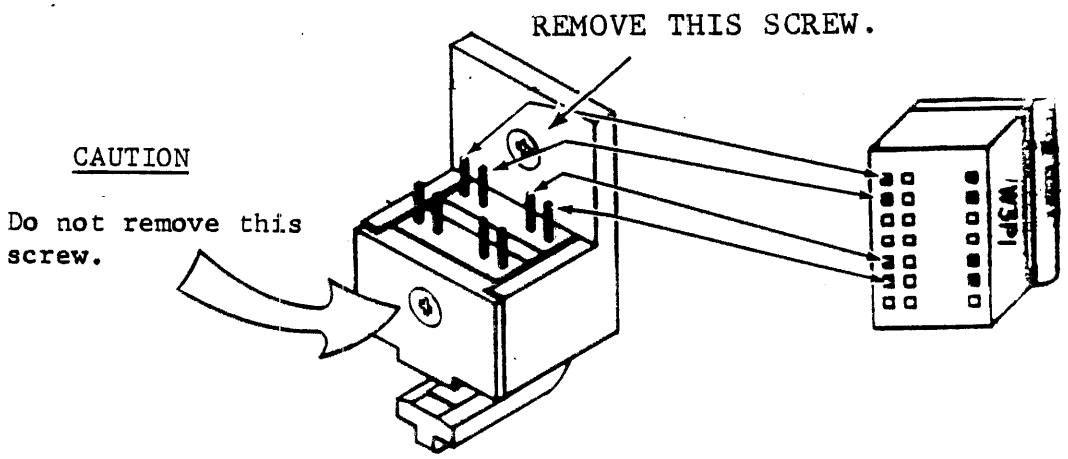

Figure 6-9. EOT/BOT SENSOR

Replacement

1. Position EOT/BOT assembly onto tape deck and install flat head mounting screw.
2. Thread tape onto take-up reel and adjust EOT/BOT assembly so that assembly is aligned perpendicular to tape.
3. Tighten flat head mounting screw.
4. Reattach W3P1 plug to assembly connector as shown. If excess cable exists, position cable so that excess is at the rear of tape deck.
5. Install head covers.

Verification Check

NOTE

If available, use a 600 foot reel of tape with properly installed EOT/BOT markers to reduce test time.

1. Load a reel of tape onto supply hub and thread tape so that BOT marker is located before EOT/BOT assembly.

2. Perform a load operation and observe that tape loads and positions itself at BOT marker (BOT indicator illuminates).

3. Execute CE Test 44 to verify operation of EOT sensor. If tape does not stop when EOT is reached, refer to TROUBLE ANALYSIS Section for test procedures.

HUB ASSEMBLY - TAKE-UP REEL

Removal

1. Remove four mounting screws from take-up reel hub cover and remove cover from hub assembly.
2. Remove three allen screws, lockwashers, and plain washers securing reel to motor shaft assembly.
3. Remove take-up reel from transport.

Replacement

CAUTION

If a new reel is being installed, inspect reel edges for burrs or cracks that could cause tape damage.

1. Perform Removal procedure in reverse order.

Verification Check

1. Manually rotate tape reel to ensure reel does not contact tape deck.
2. Load a known good reel of tape and observe reel during tape motion. Tape should not contact reel flanges.

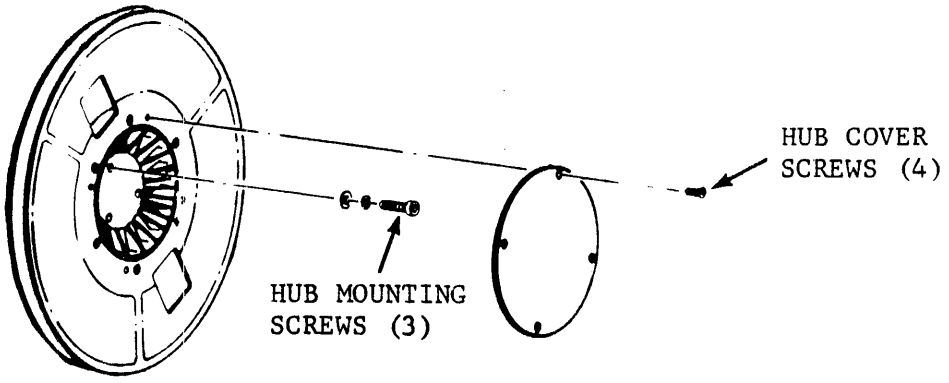

Figure 6-10. TAKE-UP REEL

MOTOR ASSEMBLY - TAKE-UP REEL

Removal

1. Perform Removal procedure for Hub Assembly - Take-up Reel.
2. Perform Removal procedure for Acoustic Shield Assembly.
3. Detach connector W4P2 from tach assembly on rear of take-up motor.
4. Detach B3P1 connector from servo power amplifier board (connector J1 on power amplifier).
5. Remove four mounting screws securing motor to rear of tape deck. Remove motor from transport.

Replacement

NOTE

Reel motor and tach must be replaced as an assembly.

CAUTION

When installing motor, make sure there are no loose wires between motor mounting plate and tape deck.

1. Position motor on rear of tape deck so that B3P1 cable extends from upper left of motor assembly if STU is mounted vertically, or lower right if STU is mounted horizontally. Secure with four mounting screws.
2. Connect B3P1 to J1 on servo power amplifier board.
3. Connect W4P2 to tach assembly on rear of motor.
4. Perform Replacement procedure for Hub Assembly - Take-up Reel.
5. Perform Replacement procedure for Acoustic Shield Assembly.

Verification Check

1. Execute CE Test 37 and if test is successful (display 00), proceed with step 2. If Test 37 is unsuccessful, refer Fault Code display to CE Test 37 termination codes.
2. Thread tape (not loaded) and execute Operator Test 01. If test is successful, test will terminate with display 00. If test is not successful, refer display number to the corresponding Fault SAM.

HUB ASSEMBLY - SUPPLY REEL

Removal

1. Press center button on hub to put hub into the unlatched position.

2. Locate slot opening on periphery of cover. Insert small blade screwdriver into slot and twist to unsnap cover from hub assembly.

3. Place hub assembly in the latched position by depressing cam carrier.

CAUTION

Ensure hub is latched before proceeding with further removal. If hub is unlatched, piece parts may disassemble.

4. Remove three large shoulder screws from cam carrier. Hub assembly can then be removed from tape deck.

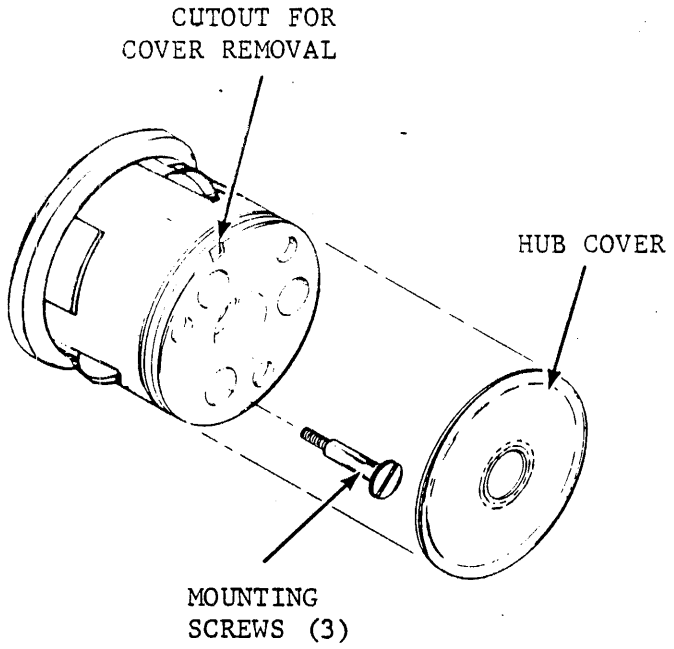

Figure 6-11. SUPPLY REEL HUB ASSEMBLY

Replacement

1. Position hub assembly onto motor shaft assembly and secure with three large shoulder screws.

2. Install cover on face of hub assembly.

Verification Check

1. Mount tape reel onto hub assembly. Reel should mount easily onto hub and against rear flange.

2. Latch reel onto hub. Ensure reel is securely fastened.

3. Load a known good quality tape and observe reel during tape motion. Tape should not contact reel flanges.

4. With tape threaded, but not loaded, execute Operator Test 01. If test is successful, test will terminate with display 00. If test is not successful, refer display number to corresponding Fault SAM.

MOTOR ASSEMBLY - SUPPLY REEL

IMPORTANT

The supply reel motor assembly is not supplied as part of spare parts list; the spared take-up reel motor assembly must be disassembled and the motor used as a replacement for the supply motor.

Removal

1. Perform Removal procedure for Supply Reel Hub Assembly.
2. Perform Removal procedure for Acoustic Shield Assembly.
3. Detach B1P1 connector from J3 on Servo Power Amplifier PWA.
4. Remove 4 mounting screws and tach cover from rear of motor.
5. Detach W3P5 connector from tach assembly at rear of motor.

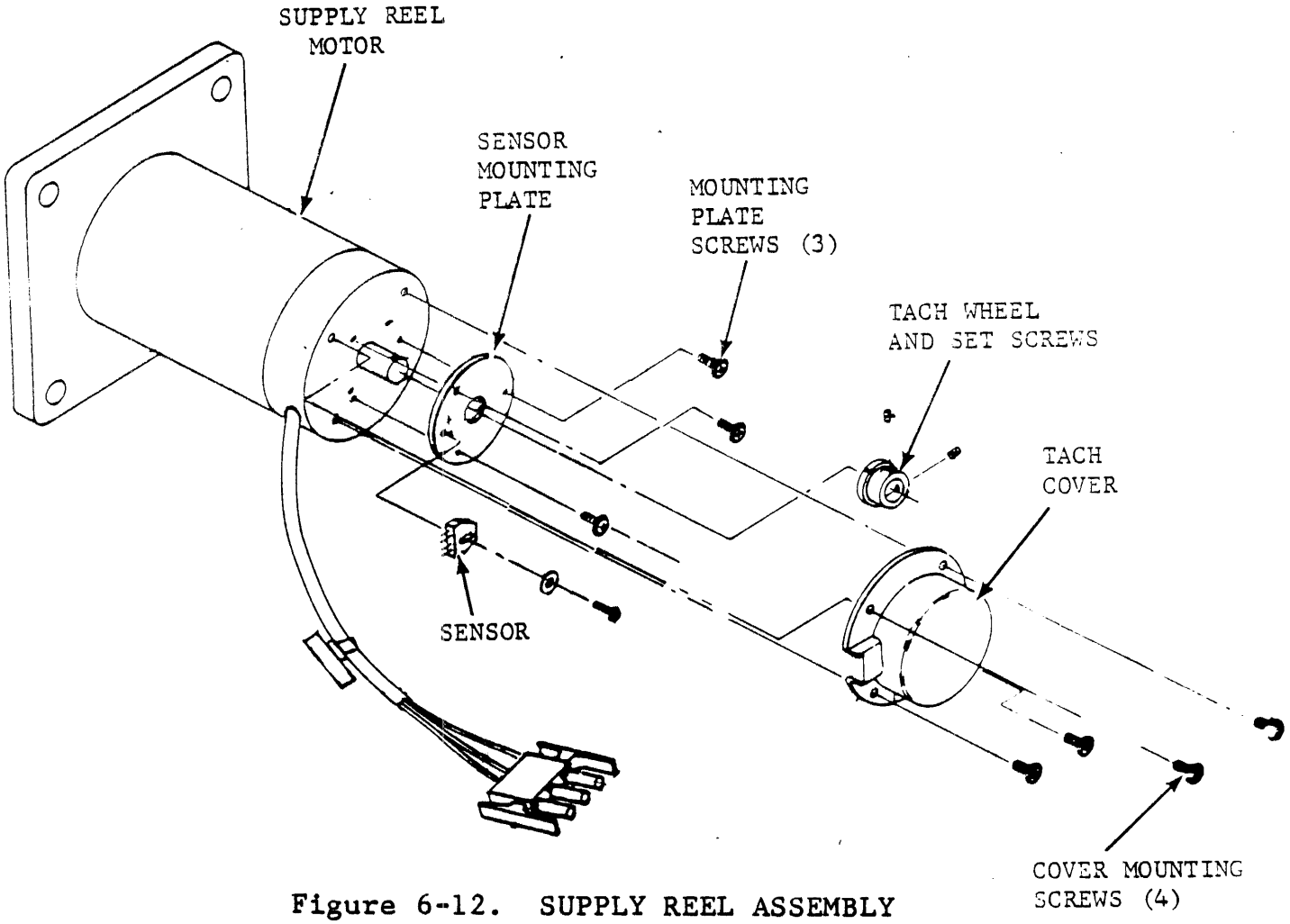

Figure 6-12. SUPPLY REEL ASSEMBLY

MOTOR ASSEMBLY - SUPPLY REEL

Removal (Cont'd)

5. Remove four mounting screws securing motor to rear of tape deck. Remove motor from transport.

6. Remove mounting screw and sensor from mounting plate at rear of supply reel motor. Retain for reuse.

7. Loosen two set screws securing tach to motor shaft and remove tach from shaft. Retain for reuse.

8. Remove four screws securing mounting plate and remove plate from supply reel motor. Retain for reuse.

9. Disassemble spared Take-Up Reel Motor Assembly as follows:

   a. Remove two mounting screws and tach cover from rear of motor assembly.
   b. Remove two mounting screws securing tach sensor to reel motor. Remove tach sensor from reel shaft and tach wheel.

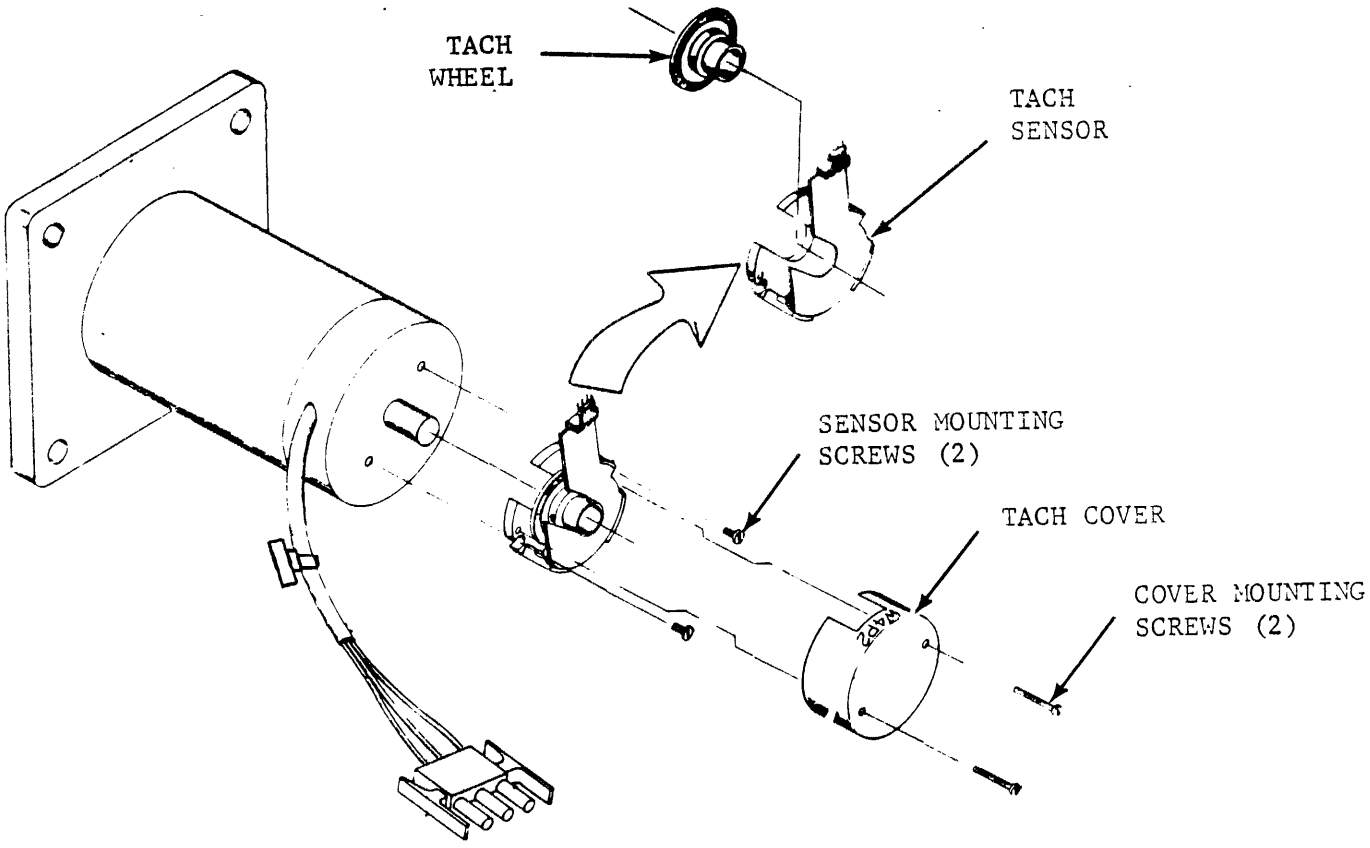

Figure 6-13. TAKE-UP REEL MOTOR ASSEMBLY

Removal (Cont'd)

c. Loosen set screw securing tach wheel and remove from motor shaft.

NOTE

Do Not attempt to reuse the removed tach assembly.

Replacement

1. Place mounting plate (from step 8 of Removal) onto rear of new motor and secure with four mounting screws.

2. Assemble sensor and tach wheel (from steps 6 and 7 of Removal) onto rear of motor mounting plate and shaft as shown in Figure 6-14 and adjust per tolerance requirements listed in the Supply Motor Tach and Sensor Procedures.

CAUTION

When installing motor, ensure there are no loose wires between motor mounting plate and tape deck.

3. Position motor on rear of tape deck so that B1P1 cable extends from left of motor if STU is mounted vertically, or from the right. Secure motor with four mounting screws.

4. Connect B1P1 cable to J3 on Servo Power Amplifier PWA.

5. Attach W3P5 connector to tach sensor pins as shown in Figure 6-14.

6. Install tach cover and secure with four mounting screws.

7. Perform Replacement procedure for Acoustic Shield Assembly.

8. Perform Replacement procedure for Hub Assembly - Supply Reel.

Verification Check

1. With tape threaded, but not loaded, execute Operator Test 01. If test is successful, test will terminate with display 00. If test is not successful, refer display number to appropriate SAM Table.

TACH AND SENSOR - SUPPLY MOTOR

Removal

1. Perform Removal procedure for acoustic shield.
2. Remove four mounting screws and tach cover from rear of motor.
3. Detach W3P5 connector from sensor pins.
4. Remove mounting screw and sensor from mounting plate.
5. Loosen two set screws securing tach to motor shaft and remove tach from shaft.

Replacement (Refer to Figure 6-14)

1. Insert tach wheel on motor shaft. Position tach for 0.030 ± 0.005 inch clearance between tach and sensor mounting plate.
2. Install sensor on mounting plate and position for a clearance of 0.150 ± 0.01 inch between sensor and tach. Tighten sensor mounting screw.
3. Attach W3P5 connector to sensor pins.
4. Install tach cover and secure with four mounting screws.
5. Perform Replacement procedure for Acoustic Shield Assembly.

Verification Check

1. With tape threaded, but not loaded, execute Operator Test 01. If test is successful, test will terminate with display 00. If test is not successful, refer display number to corresponding Fault SAM.

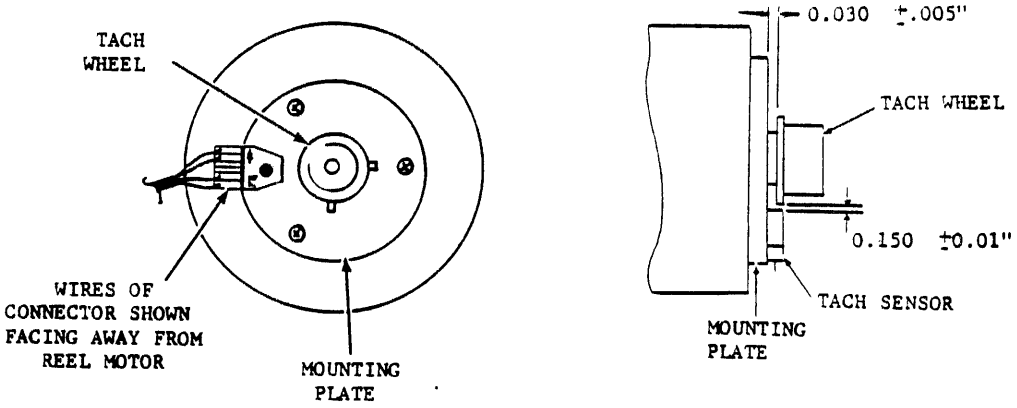

Figure 6-14. TACH/SENSOR ASSEMBLY/ADJUSTMENTS

AIR BEARING TRANSDUCER - UPPER AND LOWER

Removal

NOTE

Replacement parts for the air bearing assembly are contained in refurbishment kit P/N 77015691. This kit contains an upper and lower spring guide, transducer, and a small and large "O" ring. If the transducer is being replaced, it is recommended that upper and lower spring guides and large and small "O" rings also be replaced.

1. From rear of tape deck, remove P1 connector from transducer pins.

2. Remove two socket head mounting screws and washers securing the air bearing to rear of the tape deck. (The tape path cover on the front of the tape deck will hold the air bearings in place.)

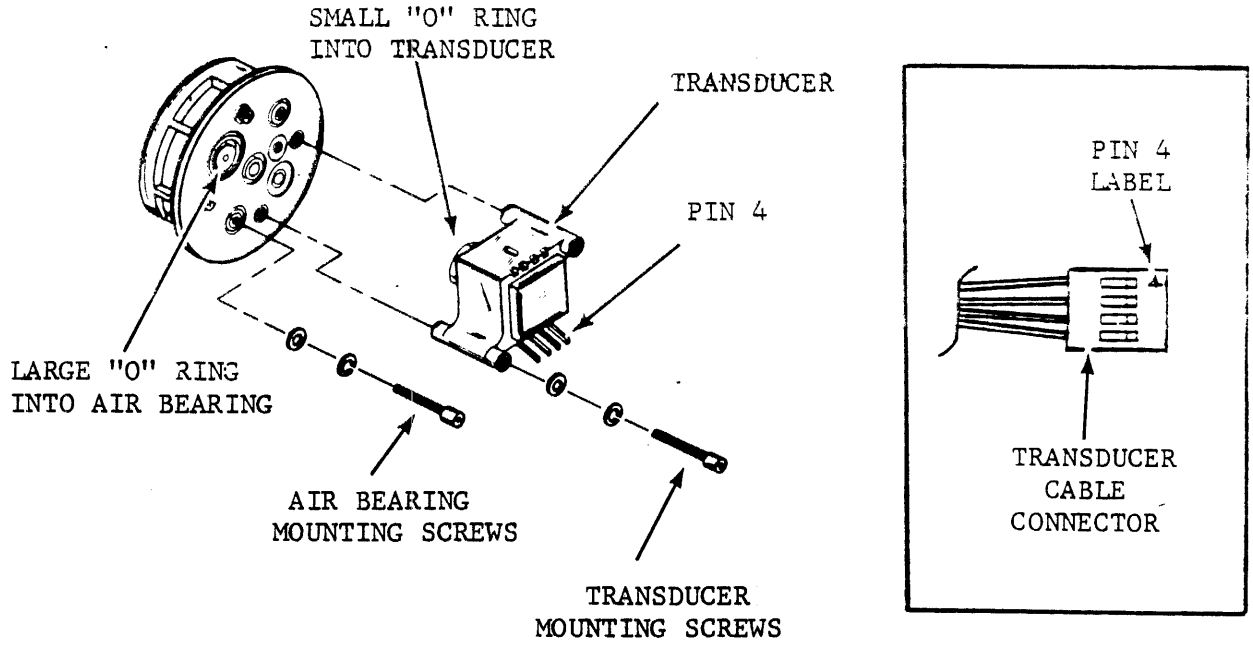

Figure 6-15. AIR BEARING TRANSDUCERS

Removal (Cont'd)

3. From the front of the tape deck, remove the tape path cover and remove the air bearing assembly from the tape deck.

4. Remove the large "O" ring from the air bearing housing.

5. Remove the two socket head screws and washers securing the transducer to the rear of the air bearing. Remove the transducer and the small "O" ring from the bearing housing.

6. Replace the upper and lower spring guides as described in the Removal/Replacement Procedure AIR BEARING SPRING GUIDE - UPPER AND LOWER.

Replacement

1. Insert a new small "O" ring in the aperture at the rear of the air bearing housing.

2. Position the transucer on the air bearing so that connector pins are positioned towards the outside of the air bearing. Secure the transducer with mounting screws and washers.

3. Insert a large "O" ring into the aperture at the rear of the air bearing housing.

4. Place the air bearing assembly onto the tape deck using the locating pin for positioning. Install the tape path covers to hold the air bearing in position.

5. Secure the air bearing to the tape deck with washers and mounting screws.

6. Reattach P1 connector to the transducer pins. Refer to Figure 6-15 for pin orientation.

Verification Check

1. With tape threaded, but not loaded, execute Operator Test 01. If test is successful, test will terminate with display 00. If test is not successful, refer display number to corresponding Fault SAM.

AIR BEARING SPRING GUIDE - UPPER AND LOWER

Removal

NOTE

Replacement parts for the air bearing assembly are contained in refurbishment kit P/N 77015691. This kit contains an upper and lower spring guide, transducer, and a small and large "O" ring. If a spring guide is being replaced, it is recommended that both upper and lower guides be replaced.

1. Remove head covers from tape deck.
2. Remove two phillips head screws securing upper spring guide and guard to bearing housing.
3. Remove spring guard and guide from housing.
4. Repeat steps 2 and 3 to remove lower spring guide.

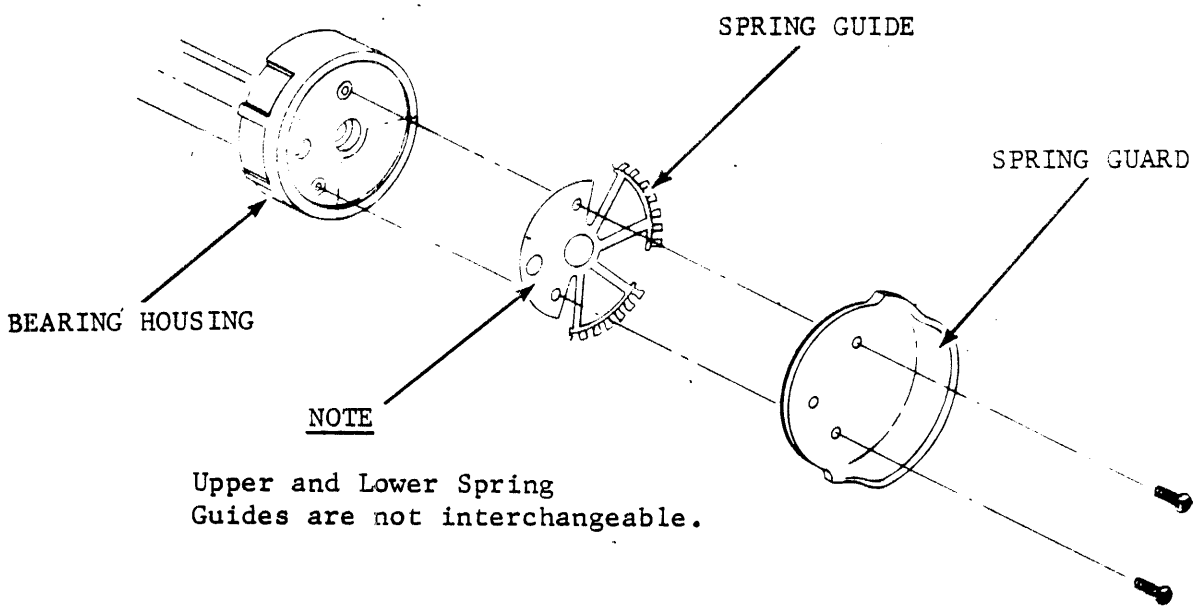

Figure 6-16. AIR BEARING SPRING GUIDE

Replacement

1. Place new upper spring guide (P/N 77004255) and guard into bearing housing. Holes for mounting screws provide positive alignment of both piece parts to housing.

2. Secure with two phillips head screws.

3. Repeat steps 1 and 2 using spring guide (P/N 77004254) to replace lower spring guide.

4. Reinstall head covers on tape deck.

Verification Check

1. With tape threaded, but no loaded, execute Operator Diagnostic Test 01. If test is successful, test terminates with display 00. If test is unsuccessful, refer display number to corresponding Fault SAM.

2. Visually observe tape for no tape edge damage.

PNEUMATIC PUMP ASSEMBLY

Removal

1. Perform Removal procedure for Acoustic Shield Assembly.

2. Detach connectors B2P1.

3. Remove pneumatic tubing (vacuum and pressure lines) from nipples on rear of tape deck.

NOTE

Detach any wiring that may interfere with removal of pneumatic pump assembly.

4. Remove 4 mounting screws securing pneumatic assembly to rear of tape deck. Carefully withdraw assembly from transport.

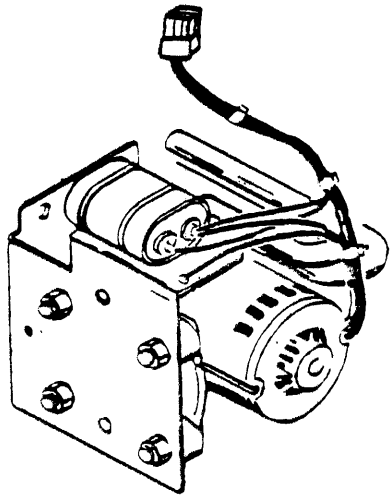

Figure 6-17. PNEUMATIC PUMP

Replacement

1. Position pneumatic pump assembly to rear of tape deck and secure with washers and mounting screws.

2. Attach pneumatic tubing to nipples on tape deck.

3. Attach connector B2P1.

4. Perform Replacement procedure for Acoustic Shield Assembly.

NOTE

Reattach any wiring that was disconnected prior to Removal procedure.

PRESSURE REGULATOR AND FILTER ASSEMBLY

NOTE

If only the pressure regulator is being replaced, perform Removal step 1, Replacement step 3, and Verification Check. If filter is being replaced, perform the entire Removal/Replacement and Verification Check procedures.

General

There are two types of pressure regulator/filter assemblies, each requiring separate removal/replacement procedures. Careful attention must be given to ensure that the proper procedures are applied to the proper assembly. This can be accomplished by comparing the unit serial number (S/N) with the following procedures and illustrations.

Removal (S/N 838 and Below)

1. Remove power amp PWA shield where applicable.
2. Remove pressure regulator by unscrewing regulator from filter can and shaft.
3. Remove filter can by pulling straight out from tape deck.
4. Remove filter from filter base assembly.

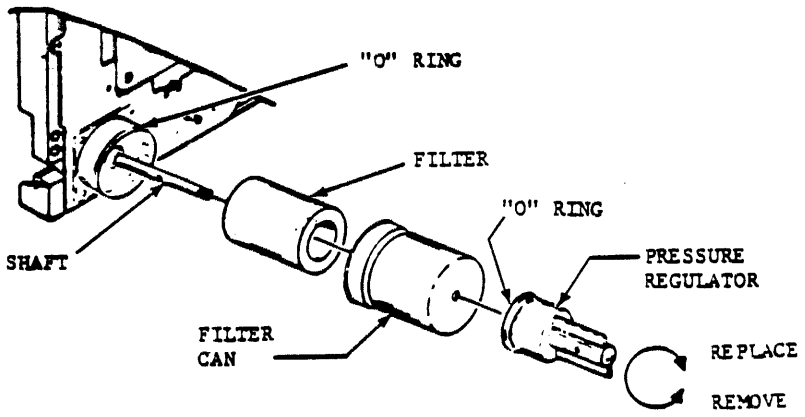

Figure 6-18. REGULATOR & FILTER REMOVAL (S/N 838 and Below)

Replacement (S/N 838 and Below)

1. Position filter into filter base.
2. Place filter can over filter and shaft and press onto filter base assembly. Ensure "O" ring is in place on filter base so that a seal is maintained between base and filter can.
3. Screw pressure regulator clockwise onto shaft protruding from filter can. Ensure "O" ring is in place on base of pressure regulator.
4. Replace power amp PWA shield where applicable.

Removal (S/N 839 and Above)

1. Remove acoustic shield assembly per Removal instructions.
2. To assure proper replacement and unit operation, label the regulator/filter hoses IN-OUT, and then detach from assembly (see figures below).
3. Remove four mounting screws and pull assembly away from tape deck.
4. The regulator, inner filter, and/or gasket may now be independently removed from the assembly.

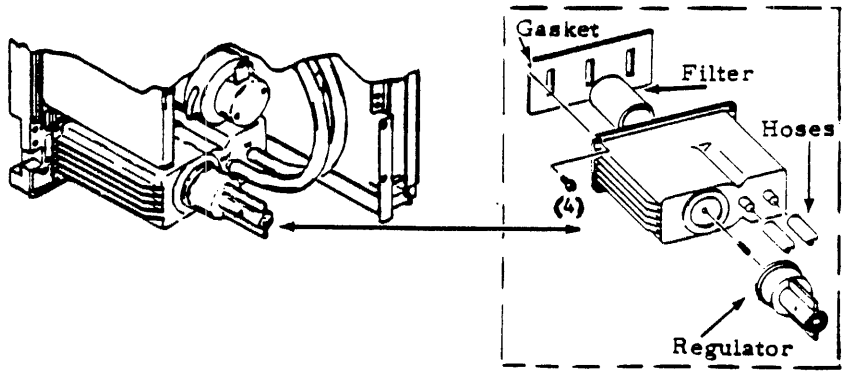

Figure 6-18A. REGULATOR & FILTER REMOVAL (S/N 839 and Above)

Replacement (S/N 839 and Above)

1. Once the individual piece parts of pressure regulator and filter assembly have been replaced, mount entire assembly to tape deck by installing the four screws and tighten.

2. Ensure proper replacement of regulator/filter hoses.

3. Replace acoustic shield assembly per Replacement procedures.

Verification Check

1. With tape threaded, but not loaded, execute Operator Test 01. If test is successful, test will terminate with display 00. If test is unsuccessful, refer display number to corresponding Fault SAM.

MAGNETIC HEAD ASSEMBLY

CAUTION

The magnetic head and two write resistors (R224/R225) are matched components. If head is being replaced, write resistors must be replaced also. Resistors are supplied with new head and are labeled with head serial number, resistor "r" number (R224 or R225), resistor value, equivalent write current and DC voltage.

NOTE

When magnetic head replacement is indicated, it is recommended that tape cleaner assembly also be replaced.

Removal

1. Remove head covers from tape deck.
2. From front of transport, detach read head connector W6P1, write head connector W5P1, and erase head wires P3/P4 from magnetic head.

NOTE

Before removing head, tape a piece of soft material across recording surface.

3. From rear of tape deck, remove read, write and erase connectors away from magnetic head.

CAUTION

Refer to figure for location of head mounting screws. DO NOT loosen head alignment screws, otherwise, entire head must be replaced by a new assembly.

4. Loosen four head mounting screws. Hold head against tape deck while removing four mounting screws, lockwashers, and flatwashers.

Removal (Cont'd)

5. Carefully withdraw head from tape deck.

6. Remove write resistors R224 and R225 from Read/Write/Servo PWA at location F17. Resistors can be removed without removing board from logic cage.

NOTE

Keep magnetic head and write resistors together as a package, if head is being returned to factory.

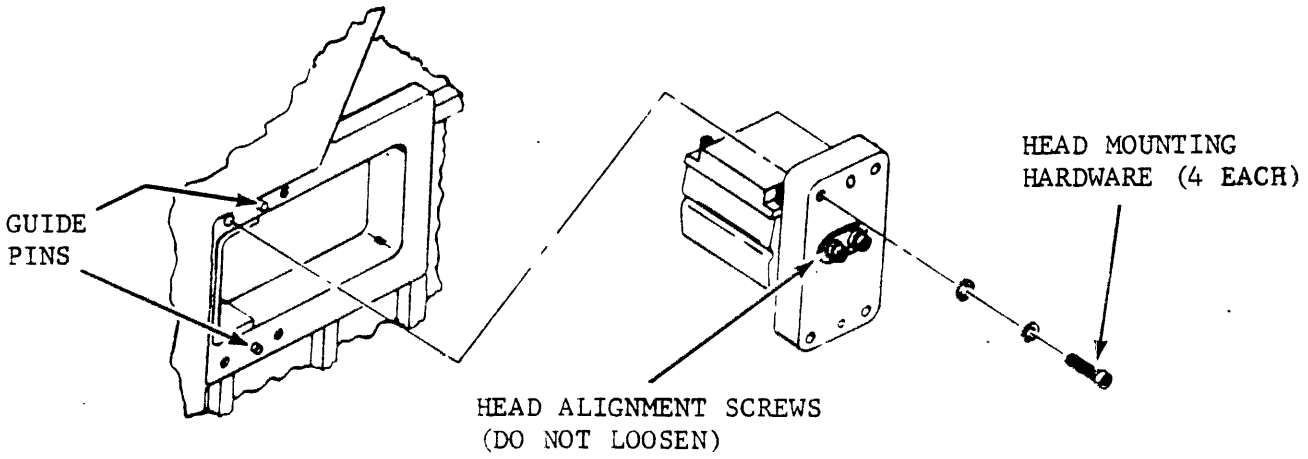

Figure 6-19. MAGNETIC HEAD ASSEMBLY

Replacement

1. Install new write resistors R224 and R225 onto Read/Write/Servo PWA. Refer to accompanying figure for resistor locations.

NOTE

Before installing magnetic head, insure that recording surface is protected with soft material.

2. Install magnetic head through tape deck and position mounting surface onto guide pins.

Replacement (Cont'd)

3. While holding head in place, insert flatwashers, lockwashers, and mounting screws. Tighten 4 mounting screws.

4. Place read and write/erase cables through tape deck.

5. From front of tape deck, attach read, write and erase connectors to magnetic head (see Figure 6-20). Remove recording surface covering.

6. Install head covers on tape deck.

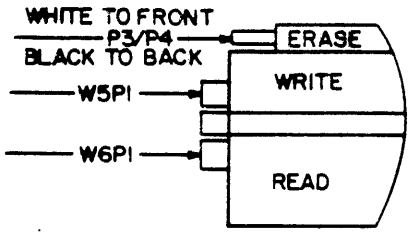

Figure 6-20. MAGNETIC HEAD CONNECTORS

Verification Check

1. Clean magnetic head recording surface with a soft lint-free cloth moistened with tape transport cleaner. Wipe recording surface in same directin as tape motion.

2. Load a 3M777, or equivalent, write enabled scratch tape and execute CE Test 18 to move tape away from BOT. Press RESET to stop tape after approximately 5 seconds.

3. Move jumper plug at location 13E on Read/Write/Servo PWA from W3 to W4 (STORE) position.

4. Execute CE Test 31.

5. After test is complete (display 00), return jumper plug from W4 (STORE) to W3 position before unit is powered down.

6. With tape still threaded, but not loaded, execute Operator Test 01. If test is successful, test will terminate with display 00. If test is unsuccessful, refer display number to corresponding Fault SAM.

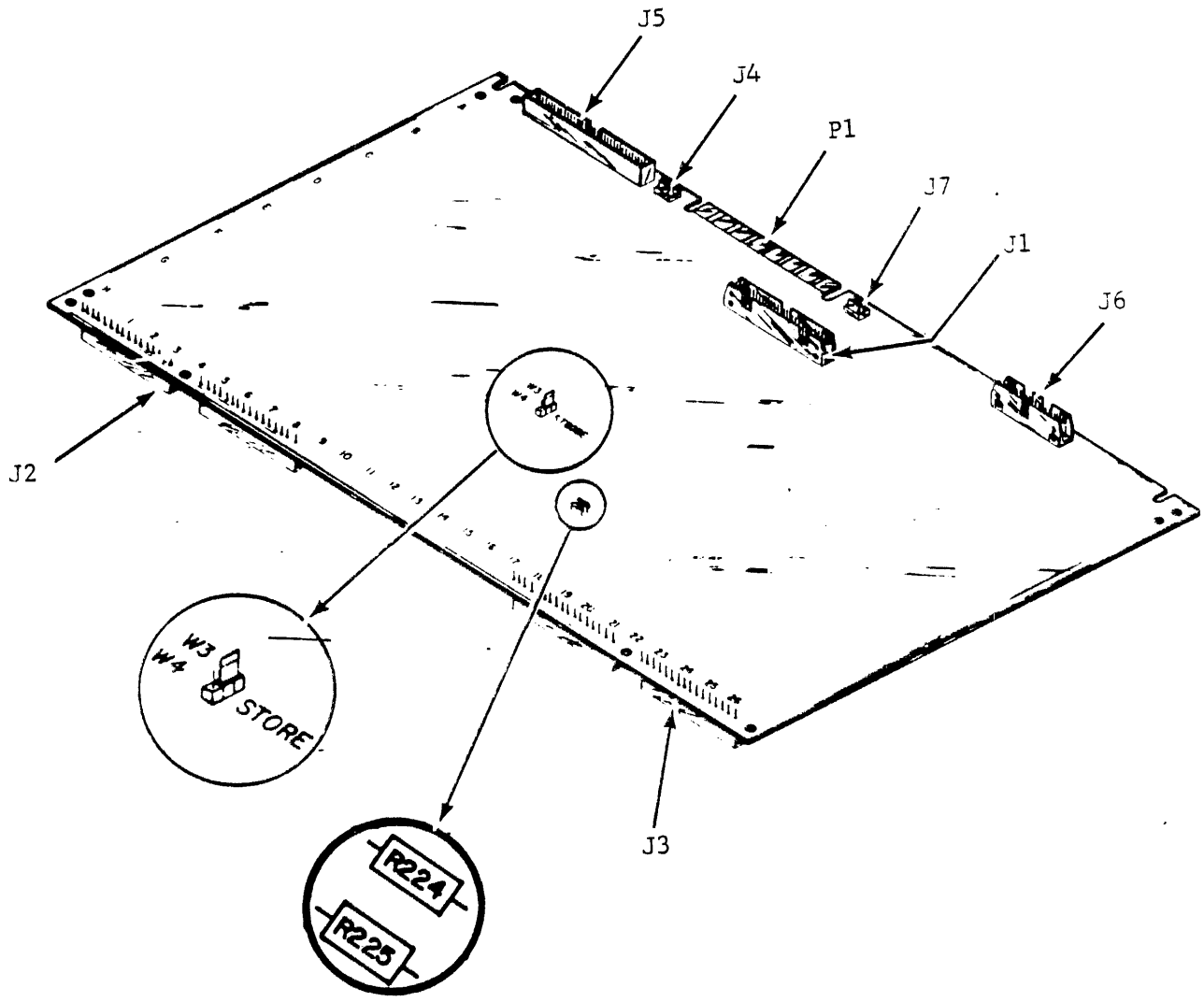

Figure 6-21. READ-WRITE-SERVO PWA

OPERATOR PANEL ASSEMBLY

Removal

1. From rear of transport, remove screw securing ground strap to tape deck (E2).
2. Release thumb screws securing PWA's to logic cage and swing PWA's to access component side of Servo-Control PWA.
3. Detach operator panel cable connector W8P1 from connector J7 on Formatter-Control PWA.
4. From front of transport, remove 4 screws securing operator panel to tape deck.
5. Remove operator panel and cable.

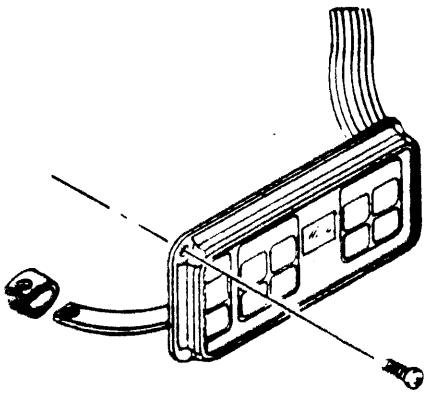

Figure 6-22. OPERATOR PANEL ASSEMBLY

Replacement

1. Insert ground strap, W8 cable and control panel through tape deck and secure with four mounting screws.
2. Attach ground strap to E2 position on tape deck and connect W8P1 to J7 position on Formatter-Control PWA.
3. Place PWA's in normal operating position and secure to logic cage bracket with top and bottom thumb screws. (Align screws with screw holes before attempting to tighten.)

Verification Check

1. Perform functional SAM's 1001 thru 1003.

COOLING FAN ASSEMBLY

Removal

1. Detach W4P5 connector from power supply.

2. Remove four hex nuts and washers and withdraw fan assembly from mounting studs.

Replacement

1. Perform Removal procedure in reverse order.

Verification Check

1. Power transport on and check for air flow from fan.

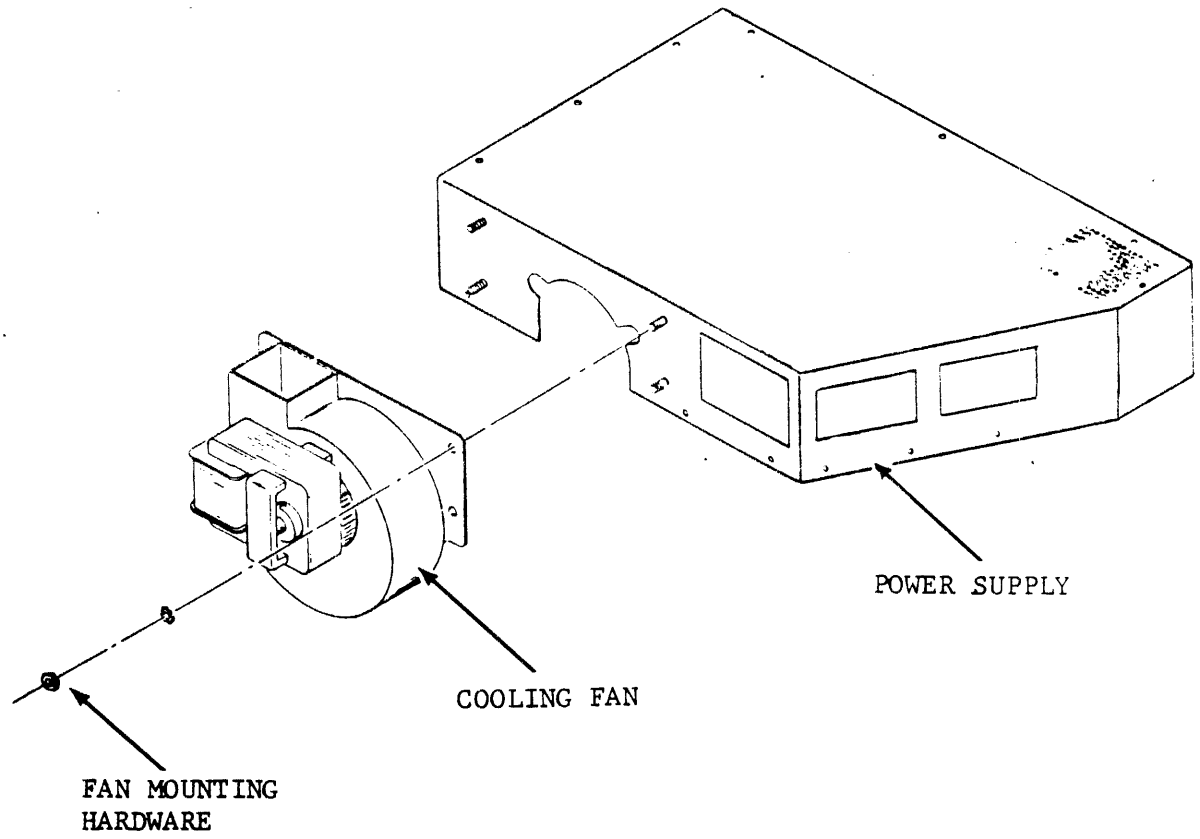

Figure 6-23. COOLING FAN ASSEMBLY

POWER SUPPLY

Removal

1. Disconnect power cord from power supply.

2. Perform Cooling Fan Assembly Removal.

3. Detach W4P4, W2P1 and W7P1 connectors from power supply.

CAUTION

A power supply weighs approximately 6.8 Kg (15 lbs).

4. While holding power supply in position, remove four mounting screws. Lift power supply away from transport.

Replacement

1. With power supply held in position, insert washers and mounting screws and tighten.

2. Attach W4P4, W2P1 and W7P1 connectors to power supply.

3. Reinstall cooling fan per Cooling Fan Assembly Replacement procedure.

4. Connect power cord to power supply.

Verification Check

1. DC Voltage Checks - Using a digital voltmeter for all DC voltage measurements, connect ground lead of meter to either pin 4 or 6 of power connector on Read/Write/Servo PWA (labeled P1 on board). Connect other meter lead to points listed to test all DC voltages.

DC VOLTAGES AND TOLERANCES

LOCATION	VOLTAGE	TOLERANCE
P1-5*	+ 5V	± 2% (4.90 to 5.10)
P1-2*	- 15V	∓ 10% (-13.5 to -16.5)
P1-3*	+ 15V	∓ 10% (+13.5 to +16.5)
P1-7*	+ 25V	∓ 10% (21.6 to +26.4)
P1-8*	- 6V	∓ 10% (-5.4 to -6.6)
J4-6**	+ 38V	∓ 10% (+34.2 to +41.8)

* P1 is the power connector on Read/Write/Servo PWA.
** J4 is the power connector on Power Amplifier.

RD/WR/SERVO PWA

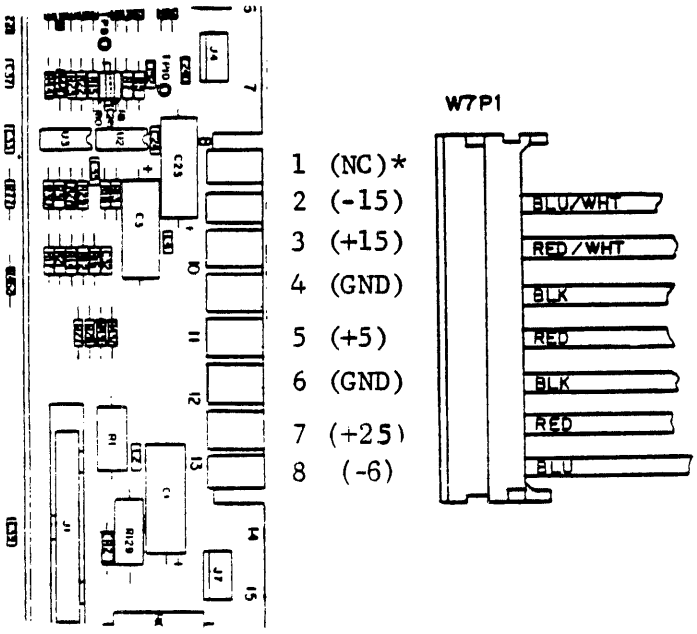

* No Connection

CAUTION

If a new power supply is being installed, remove top cover and observe position of Voltage Select PWA (below). The position of this PWA must correspond to the input voltage as defined on the equipment identification plate. The ends of the PWA are stencilled with "120V" and "220V" and indicating arrows. Ensure PWA is connected to match input voltage.

The PWA can be disconnected, turned upside down, and reconnected to the Main Power Supply PWA if required.

READ/WRITE/SERVO PWA

Removal

1. Detach connectors J1 and J4 thru J7 from PWA.

2. Loosen two thumb screws and separate the Read/Write/Servo PWA from the Formatter/Control PWA. Avoid undue stress on PWA's by loosening thumb screws alternately and separating PWA's as screws are loosened.

3. Loosen and back out only the bottom screw (see Figure 6-20) of each hinge. Hold PWA in place while loosening screws.

4. Remove Read/Write/Servo PWA from logic cage.

Replacement

```
* * * * * * * * * * * * * * * * * * * * * *
*                ***CAUTION***              *
*                                           *
* If a new PWA is being installed, remove   *
* R224 and R225 Write Resistors from removed *
* PWA and insert resistors into new PWA.    *
* (Figure 6-21)                             *
* * * * * * * * * * * * * * * * * * * * * *
```

1. AFTER INSTALLING RESISTORS R224 AND R225 IN SPARE PWA, insert PWA into top and bottom hinge slots of logic cage. Ensure PWA is fully inserted into hinge slot.

2. Attach outside connectors J2 and J3 of both PWA's and secure with two thumb screws.

3. Insert bottom screw of top and bottom hinges to lock PWA into position.

4. Attach cable connectors to PWA as shown below:

J1 - W5P2	J6 - W6P2
J4 - File Sensor	J7 - Takeup Sensor
J5 - W3P8	

Verification Check

1. Move jumper plug at location 13E on Read/Write/Servo PWA from W3 to W4 (STORE) position.

2. With tape not threaded, execute CE Test 37. If test is successful, test will terminate with display 00. If test is unsuccessful, refer display number to test description for Test 37.

Verification Check (Cont'd)

3. Load a 3M777, or equivalent, write enabled tape.

4. Execute CE Test 18 to move tape away from BOT. Press RESET to stop tape motion after approximately 5 seconds.

5. Execute CE Test 31. If test is successful, test will terminate with display 00. If test is unsuccessful, refer display number to test description for Test 31.

6. After test is complete (display 00), return jumper plug from W4 (STORE) to W3 position before unit is powered down.

7. With tape threaded, but not loaded, execute Operator Test 01. If test is successful, test will terminate with display 00. If test is unsuccessful, refer display number to corresponding Fault SAM.

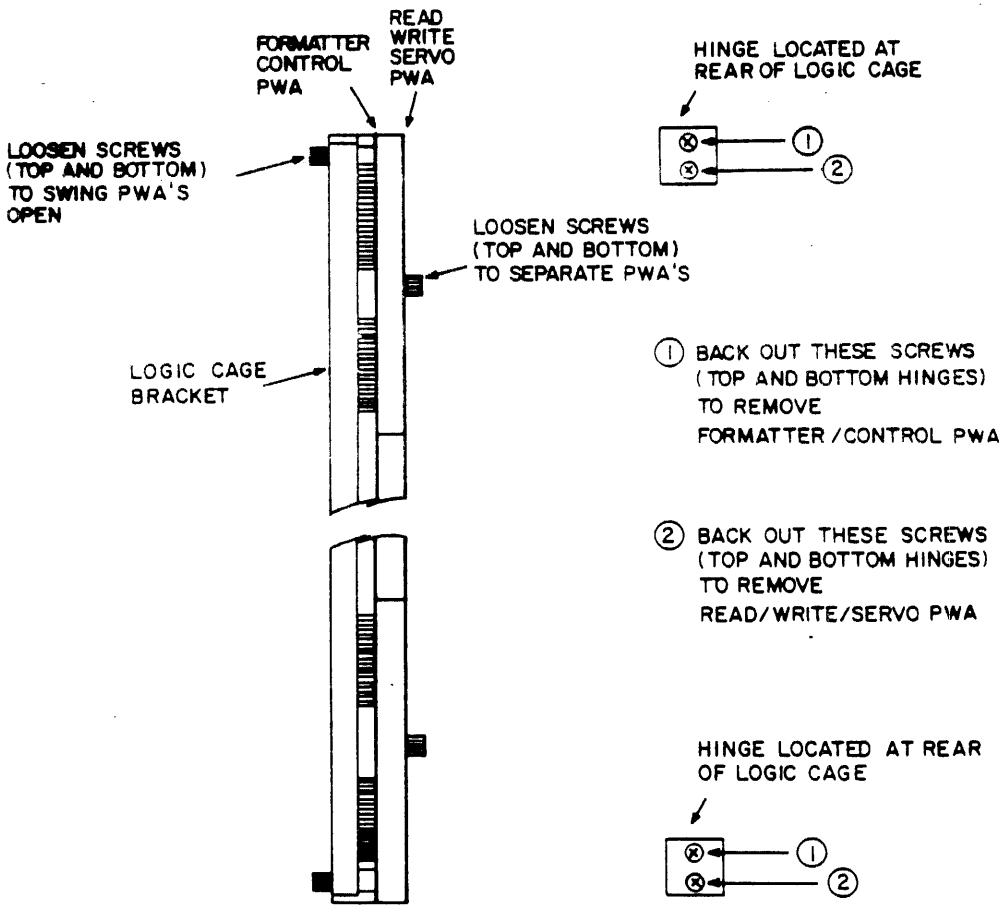

Figure 6-24. LOGIC CAGE ASSEMBLY

FORMATTER/CONTROL PWA

Removal

1. Remove I/O cables from connectors P4 and P5 of Formatter/Control PWA.

2. Loosen two thumb screws securing PWA to logic cage bracket (see Figure 2-21) and swing PWA's open to access component side of Formatter/Control PWA's.

3. Remove cable connectors from P6 and P7 of PWA.

4. Loosen two thumb screws and separate Read/Write/Servo and Formatter/Control PWA's. Avoid undue stress on PWA's by loosening thumb screws alternately and separating PWA's as screws are loosened.

5. Loosen and back out (do not remove) the top screw of top and bottom hinges. Hold Formatter/Control PWA while loosening hinge screws.

6. Remove Formatter/Control PWA from logic cage.

NOTE

Prior to installing new PWA, place 4-segment DIP switch at location D21 to same address as set in removed PWA. Also ensure that jumpers at location 16E are in same position as in removed PWA.

Replacement

1. Insert PWA into top and bottom hinge slots of logic cage. Ensure PWA is fully inserted into hinge slot.

2. Attach outside connectors P2 and P3 of Formatter PWA to J2 and J3 of Read/Write/Servo PWA and secure with two thumb screws.

3. Reattach W2P1 cable to P6 and W8P1 cable to P7 of Formatter PWA.

4. Place PWA's in closed position and align thumb screws with screw slots. Secure with two thumb screws.

5. Insert top screw of top and bottom hinges to lock PWA in position.

Verification Check

1. Perform functional SAM's 1001 thru 1003.

POWER AMPLIFIER PWA

Removal

1. Perform Removal procedure for Acoustic Shield Assembly.

2. Detach the following connectors from Power Amp PWA:

   J1 - B3P1
   J2 - W3P7
   J3 - B1P1
   J4 - W7P2

3. If the unit has a power amplifier assembly cover, it must be removed. If the unit does not have a power amplifier assembly, ignore this step and perform step 4.

4. Remove three screws along outside edge of PWA to release PWA from mounting assembly. Remove PWA.

Replacement

1. Insert Power Amp PWA into mounting assembly. The inside of mounting assembly has metal slots to receive PWA.

2. Secure PWA by installing three screws along outside edge.

3. If the unit previously had a power amplifier assembly cover, re-install the cover assembly and secure with two pan head phillips locking screws.

4. Install connectors as follows:

   J1 - B3P1
   J2 - W3P7
   J3 - B1P1
   J4 - W7P2

5. Perform Replacement procedure for Acoustic Shield Assembly.

Verification Check

1. With tape threaded, but not loaded, execute Operator Test 01. If test is successful, test will terminate with display 00. If test is unsuccessful, refer display number to corresponding fault SAM.

CAPACITOR ASSEMBLY

Removal

1. Perform Removal procedure for Acoustic Shield Assembly where applicable.

2. Detach capacitor connector from J5 of the Power Amp PWA.

CAUTION

DO NOT remove protective terminal caps located on top of capacitor during removal or replacement procedures.

3. At the rear of the tape deck (shown below), remove three captive nut and washer assemblies from the capacitor mounting assembly. Remove capacitor assembly.

Replacement

1. Mount replacement capacitor assembly as shown above and install three captive nut and washer assemblies. Tighten securely.

2. Install capacitor connector to J5 of the Power Amp PWA.

3. Perform Replacement procedure for Acoustic Shield Assembly where applicable.

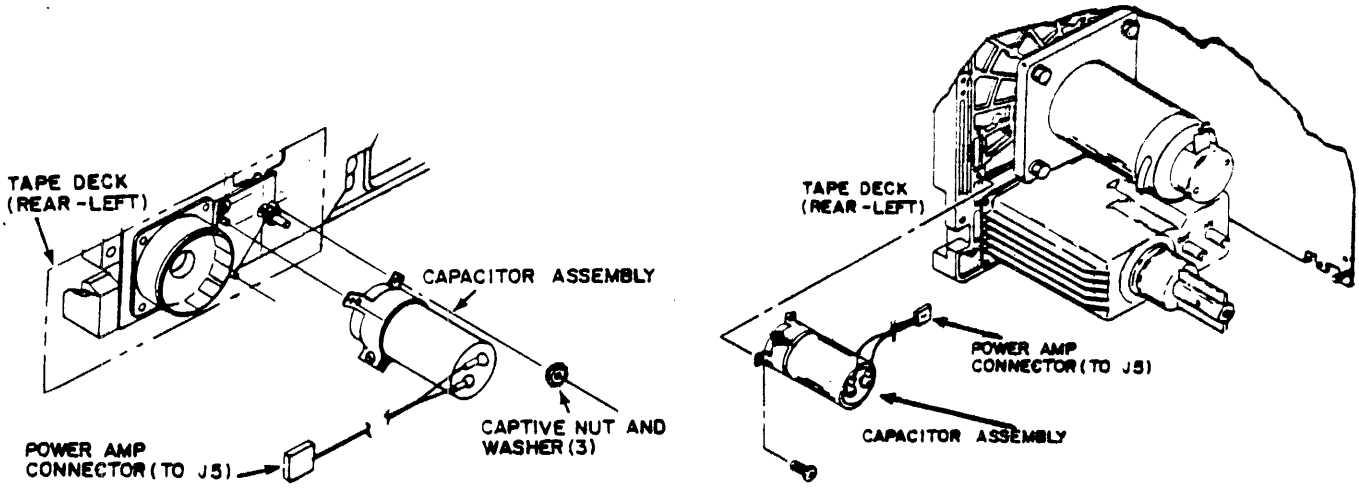

S/N 838 and below S/N 839 and above

Figure 6-25. CAPACITOR ASSEMBLY

Verification Check

1. Thread tape (not loaded) and run Operator Tests 01 and 02.

ACOUSTIC SHIELD ASSEMBLY

Removal

1. The cooling fan assembly must be temporarily remounted (as shown below) before attempting removal of acoustic shield.

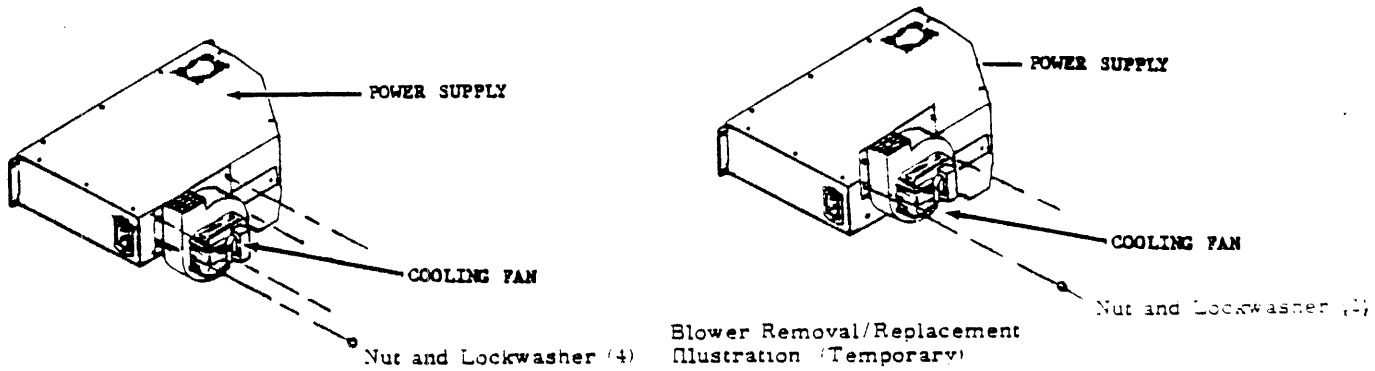

Blower Removal/Replacement Illustration (Temporary)

2. Remove two pan head screws and lockwashers from power amp PWA bracket.

3. Remove three nuts and lockwashers from logic card bracket.

4. Disconnect both hoses from filter assembly (Figure 6-26A). To prevent incorrect replacement, temporarily label hoses IN or OUT.

5. Remove acoustic shield.

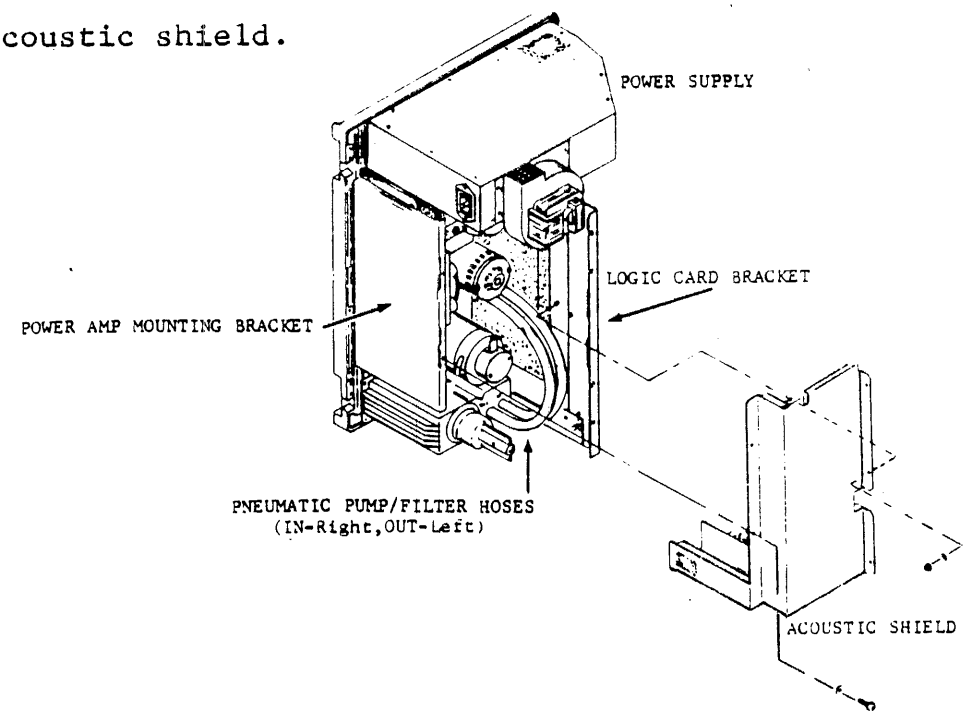

Figure 6-26A. ACOUSTIC SHIELD ASSEMBLY (UNMOUNTED)

ACOUSTIC SHIELD ASSEMBLY

Replacement (Cont'd)

1. Route filter hoses through cut-out on right side of acoustic shield (Figure 6-26B). Insure correct replacement of hoses to filter.

2. Install acoustic shield to the rear of tape deck and align with logic card bracket and power amp PWA brackets as shown.

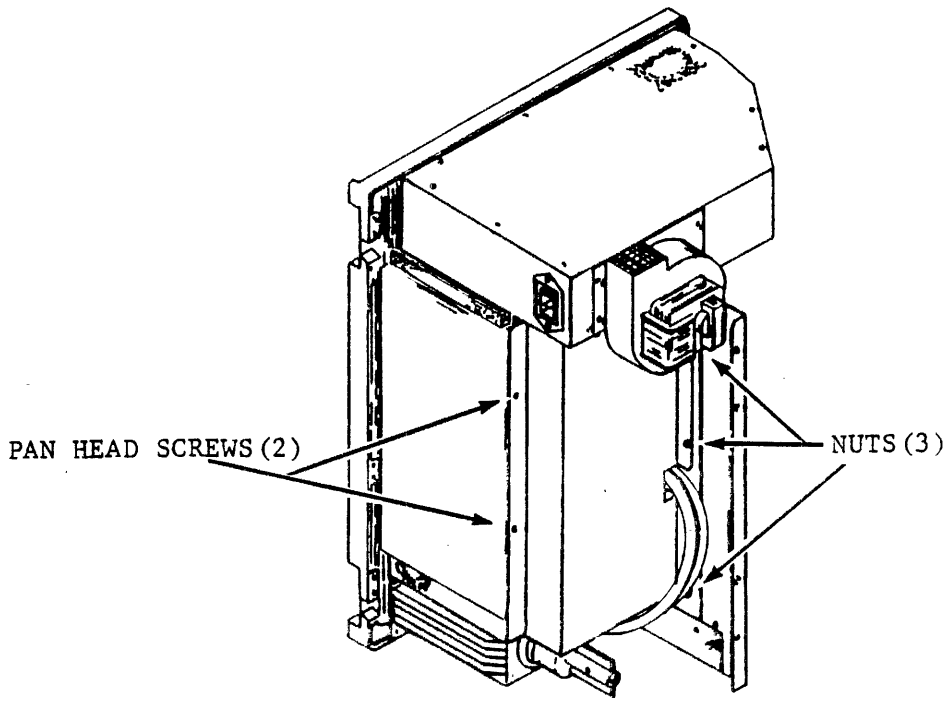

Figure 6-26B. ACOUSTIC SHIELD ASSEMBLY (MOUNTED)

3. Install two pan head screws and lockwashers to acoustic shield and power amp PWA bracket and tighten.

4. Install three nuts and lockwashers to acoustic shield and logic card bracket and tighten.

5. Remount cooling fan assembly to original position.

Verification Check

When tape is threaded, but not loaded, execute Operator Test 01. If test is successful, test will terminate with display 00. If test is unsuccessful, refer display number to the corresponding Fault SAM.

DRIVE COVER ASSEMBLY

Removal

1. Loosen wing nuts and screws securing drive cover assembly and remove cover (Figure 6-27). The drive cover assembly consists of drive cover with attached foam strips and grommet.

Replacement

1. Place drive cover assembly in position so that cooling fan wires are placed in feed-thru hole.

2. Secure cover with wing nuts and screws.

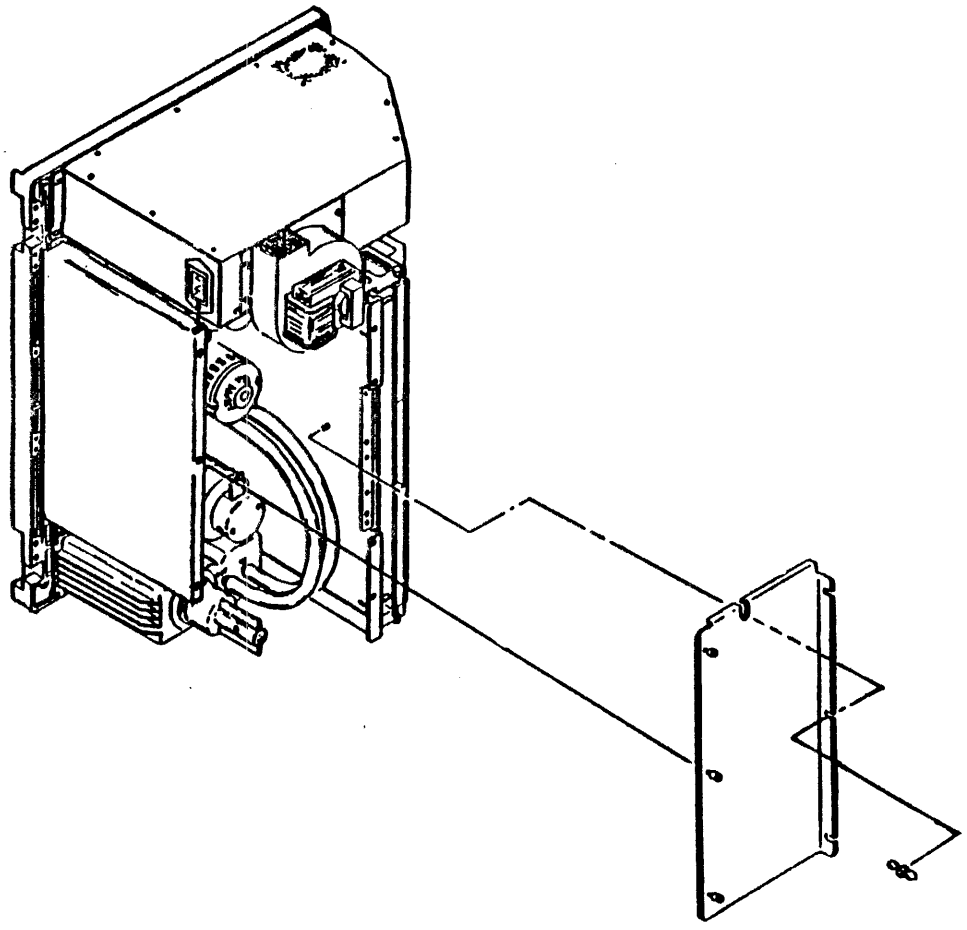

Figure 6-27. DRIVE COVER ASSEMBLY

CAPACITOR

Removal

1. Remove drive cover.
2. Remove capacitor connector from J5 of Power Drive PWA.
3. Insert a screwdriver through access hole and loosen screw holding capacitor in retainer. Remove capacitor from retainer.

NOTE

The capacitor loses its charge within four seconds after transport power is removed.

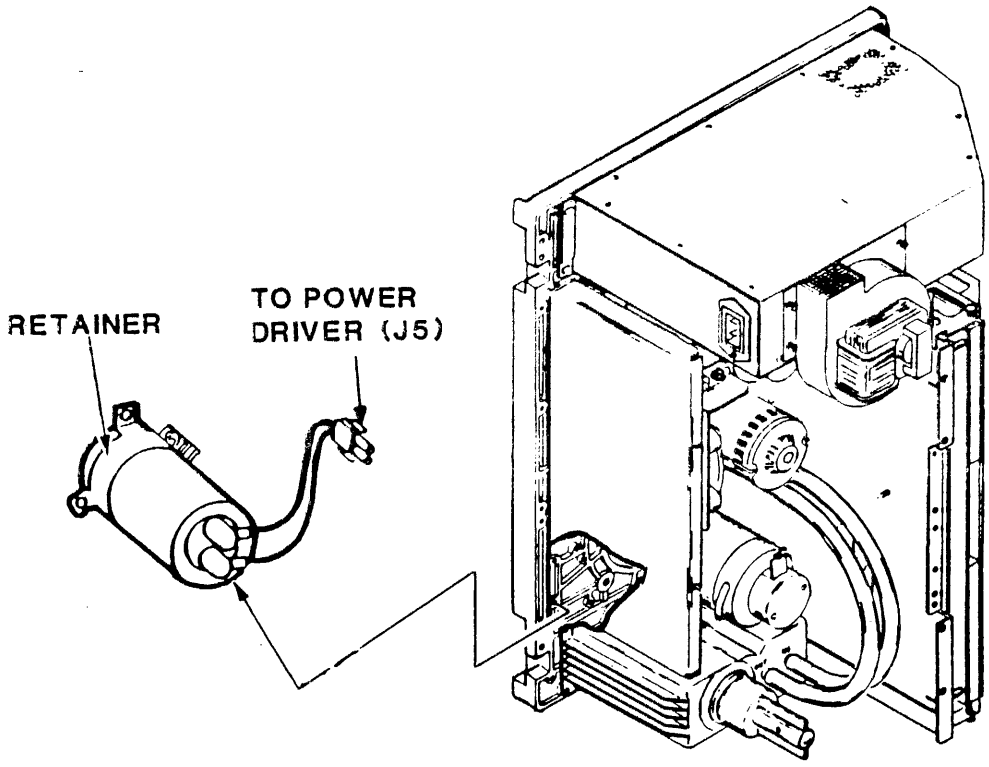

Figure 6-28. CAPACITOR

Replacement

1. Install connector wires to the same capacitor terminal locations as the original. Slide protective caps over terminals.

2. Place capacitor in retainer. Insert a screwdriver through access hole and tighten retainer screw until capacitor is secured.

3. Install capacitor connector into J5 of Power Driver PWA.

4. Replace drive cover.

Verification Check

1. Thread tape. Do not load. Execute Operator Diagnostic Test 01.

A. FORMAT - A general understanding of this manual is necessary for efficient use in identifying parts and obtaining part numbers.

1. Locators are provided to aid in the location of an assembly and the figure in which it is illustrated. Isometric illustrations are provided for every major assembly and subassembly of the tape transport.

B. EXPLANATION OF TERMS AS USED IN THE PARTS LIST (See Example)

1. The number before the hyphen is the figure to which it applies. The number after the hyphen is the callout number on the figure.

2. The 8-digit number is the identifying number used in ordering replaceable parts.

3. INDENTURES - This indicates the relationship of parts to the next higher assembly.

EXAMPLE: The Fan, Axial, Item -1, 1 dot, is part of the Fan and Housing Assembly, Item 3-.

4. ATTACHING PARTS - The attaching parts for a particular part or assembly.

5. The part code refers to the ordering of parts and is to be read as follows:

* = Authorized Field Replacement Part. Item is available on a routine order or an emergency order if justified.

CNS = Cataloged Not Stocked. Item is in stock only at original manufacturing division or outside vendor.

In an emergency:

a. Order next higher assembly that contains item from CEM; that assembly must be coded with an asterisk(*).

b. Do not order any CNS items on an emergency order.

In routine cases:

a. Order the item on a routine order from CEM.

b. Expect delivery of the item in 4 to 26 weeks.

NC = Not Cataloged. Item is only available as follows:

For assembly-type items (routine or emergency):

Always order the next higher assembly that contains the item; that assembly must be coded with an asterisk (*).

For standard common hardware items (nuts, bolts, screws, washers, etc.,):

1. Look up the part in the CDC Publication 15004400, Parts and Application Data Handbook.

2. Order the part by part number specified in the Data Handbook. Do not order standard common hardware items on an emergency order.

EXAMPLE

INDEX NO.	PART CODE	PART NUMBER	DESCRIPTION 1 2 3 4 5 6
3-	*	77010651	FAN & HOUSING ASSEMBLY
-1	CNS	94895301	. FAN, AXIAL
-2	CNS	77010661	. HARNESS ASSEMBLY
-3	CNS	49839093	. CABLE ASSEMBLY
-4	NC	91976639	. SCREW, METRIC MACH, PAN HD, M4 x 10
-5	NC	91975670	. WASHER, METRIC, EXT TOOTH, M4
			-----*-----
-6	NC	83769135	. SEAL
-7	NC	83765209	. FAN HOUSING ASSEMBLY
-8	CNS	83769136	. FILTER
			-attaching parts-
-9	NC	77225800	. STAND-OFF
-10	NC	91976215	. SCREW, METRIC MACH, PAN HD, SLOT, M3 x 30
-11	NC	91975615	. WASHER, FLAT M3
-12	NC	91975643	. WASHER - INTERNAL TOOTH
-13	NC	91975722	. NUT, METRIC, HEX, M3

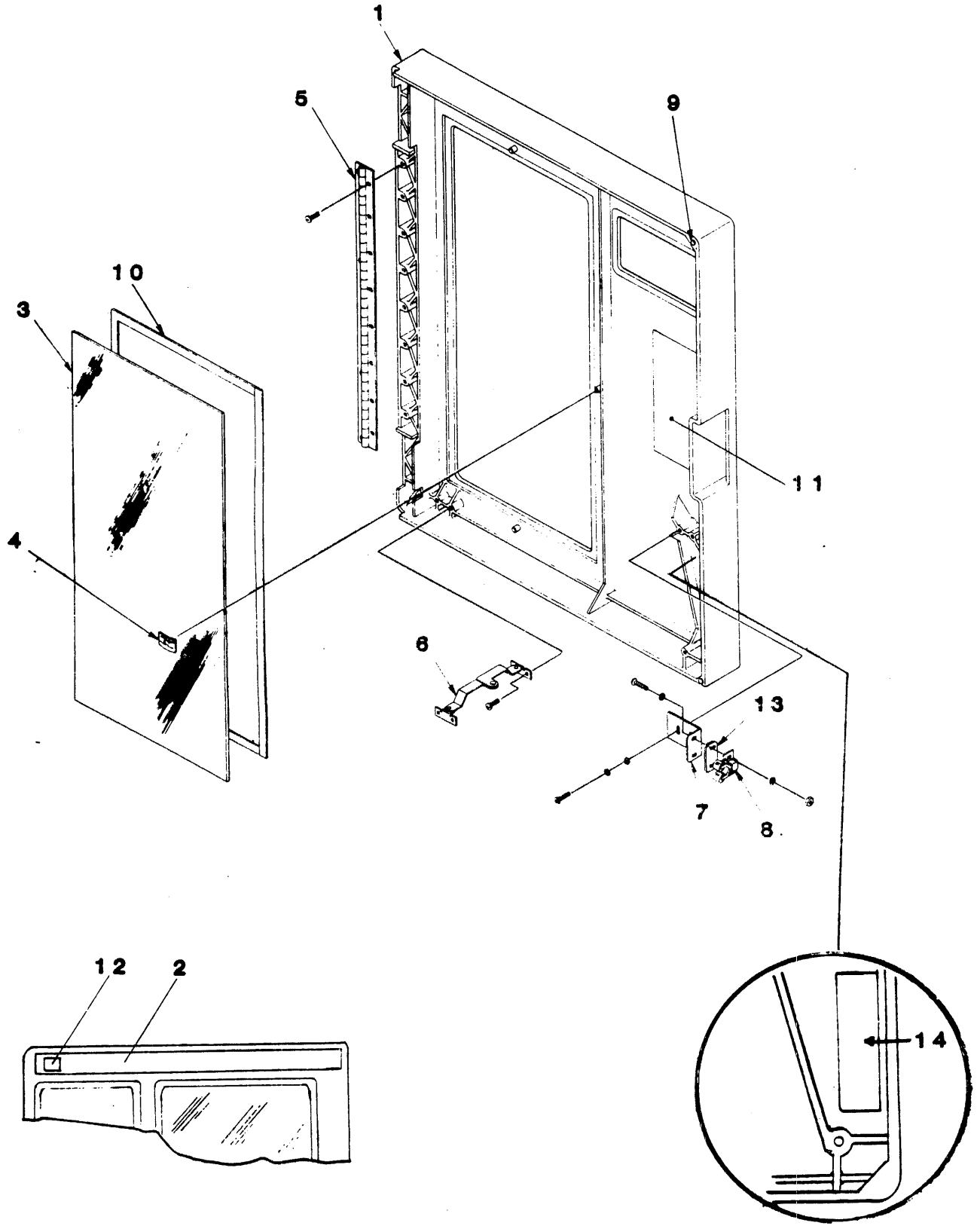

Figure 7-1. Equipment Assembly, Front View

INDEX NO.	PART CODE	PART NUMBER	DESCRIPTION 1 2 3 4 5 6
2-	CNS	7701835X	DOOR + TRIM ASSEMBLY
-1	CNS	77013951	. DOOR, VERTICAL - SEAFOAM WHITE
-1	CNS	77013952	. DOOR, VERTICAL - LT. GRAY
-1	CNS	77013953	. DOOR, VERTICAL - IVORY
-1	CNS	77013955	. DOOR, VERTICAL - BLACK
-1	CNS	77013956	. DOOR, VERTICAL - WHITE
-1	CNS	77013957	. DOOR, VERTICAL - BEIGE
-1	CNS	77013961	. DOOR, VERTICAL - GRAY
-2	NC	77006631	. DECORATIVE TRIM - IMPERIAL BLUE (TAB 52 ONLY)
-2	NC	77006632	. DECORATIVE TRIM - BLACK (TAB 53 ONLY)
-2	NC	77006633	. DECORATIVE TRIM - BROWN (TAB 51 ONLY)
-3	NC	77005081	. WINDOW, DOOR
-4	NC	93864267	. FASTENER, PUSH-IN
-5	NC	77005090	. HINGE-CONTINUOUS
-6	NC	49984642	. MECH. ASSY - HING STAY UPPER
-7	NC	77013910	. BRACKET, LATCH
-8	NC	92574001	. CATCH, ROLLER FRICTION
-9	NC	77016320	. PAD, SELF-ADHESIVE
-10	NC	95968381	. TAPE-FOAM, DBLF ADH .031 x .19
-11	NC	77015730	. LABEL, FAULT RECOVERY
-12	NC	77005514	. PRODUCT IDENT EMBLEM (TAB 52 ONLY)
-13	NC	77015660	. SPACER (ALL EXCEPT TABS 56 & 57)
-14	NC	21987646	. LABEL - FCC, RFI, CLASS A, METRIC

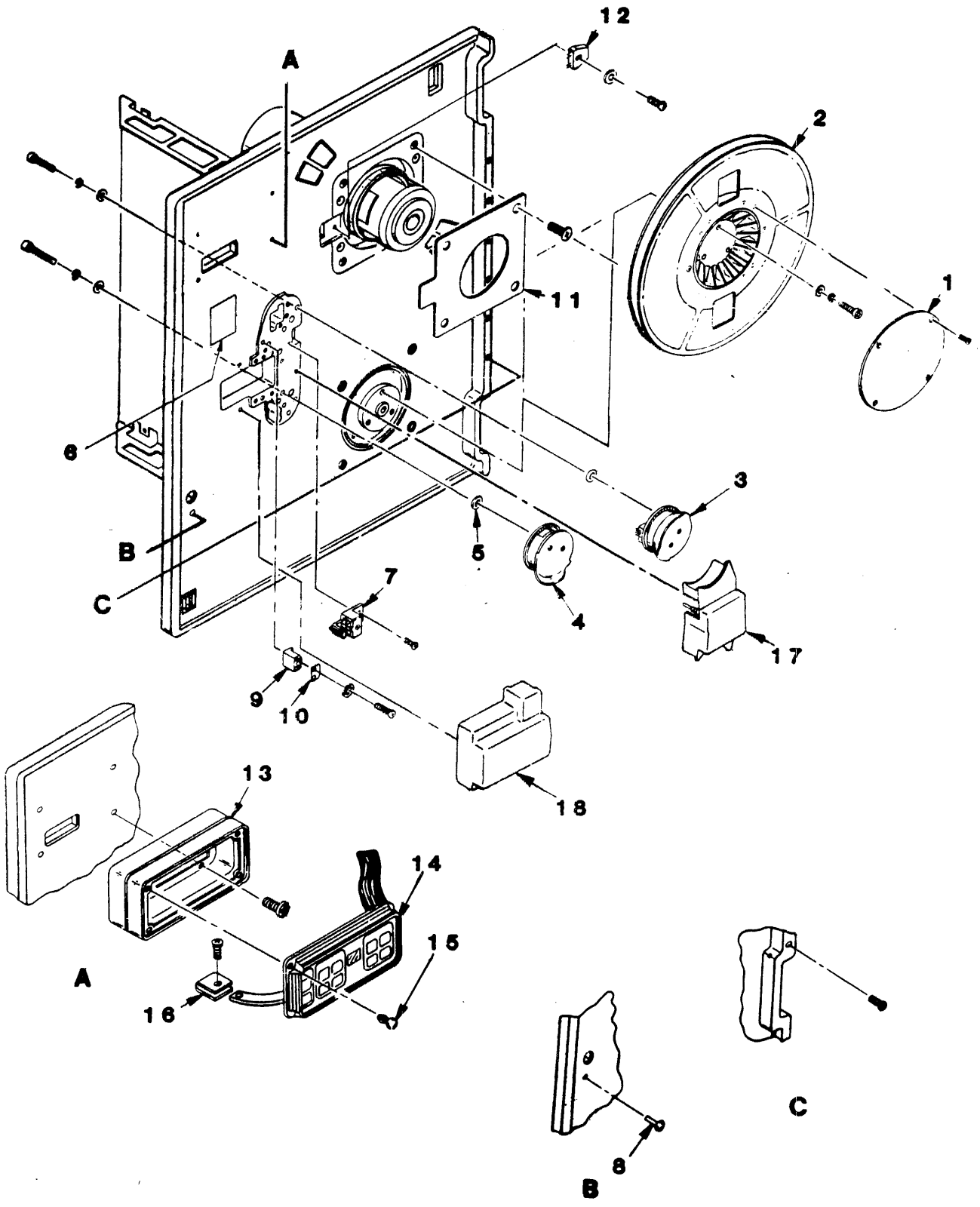

Figure 7-2. Equipment Assembly, Front

INDEX NO.	PART CODE	PART NUMBER	DESCRIPTION 1 2 3 4 5 6
	NC	7702105X	EQUIPMENT ASSEMBLY, FRONT VIEW (50/60 HZ)
-1	*	77003790	. COVER-HUB TAKE UP REEL
-2	*	77003091	. HUB ASSEMBLY-TAKE UP REEL
-3	CNS	77004213	. AIR BEARING ASSEMBLY-UPPER (See FIGURE 7-10)
-4	CNS	77004333	. AIR BEARING ASSEMBLY-LOWER (See FIGURE 7-9)
-5	*	95870206	. 'O'-RING, SILICON (See FIGURE 7-9 or 7-10)
-6	NC	77006990	. LABEL-TAPE PATH
-7	*	77004612	. EOT/BOT ASSEMBLY
-8	NC	77014130	. DOOR CATCH STRIKE, BALL END
-9	*	77010492	. TAPE CLEANER ASSEMBLY
-10	CNS	77004720	. PLATE, TAPE CLEANER
-11	CNS	77014981	. COVER-FILE PROTECT (BLK)
-12	*	95966083	. SENSOR
-13	NC	77014220	. HOUSING-OPERATOR PANEL
-14	NC	77010432	. OPERATOR PANEL ASSEMBLY
-15	NC	95968770	. CLIP, PUSH-IN
-16	NC	77009840	. TERMINAL-FOIL GROUNDING
-17	NC	77011561	. COVER ASSEMBLY, TAPE PATH
-18	CNS	77011571	. COVER ASSEMBLY, MAGNETIC HEAD

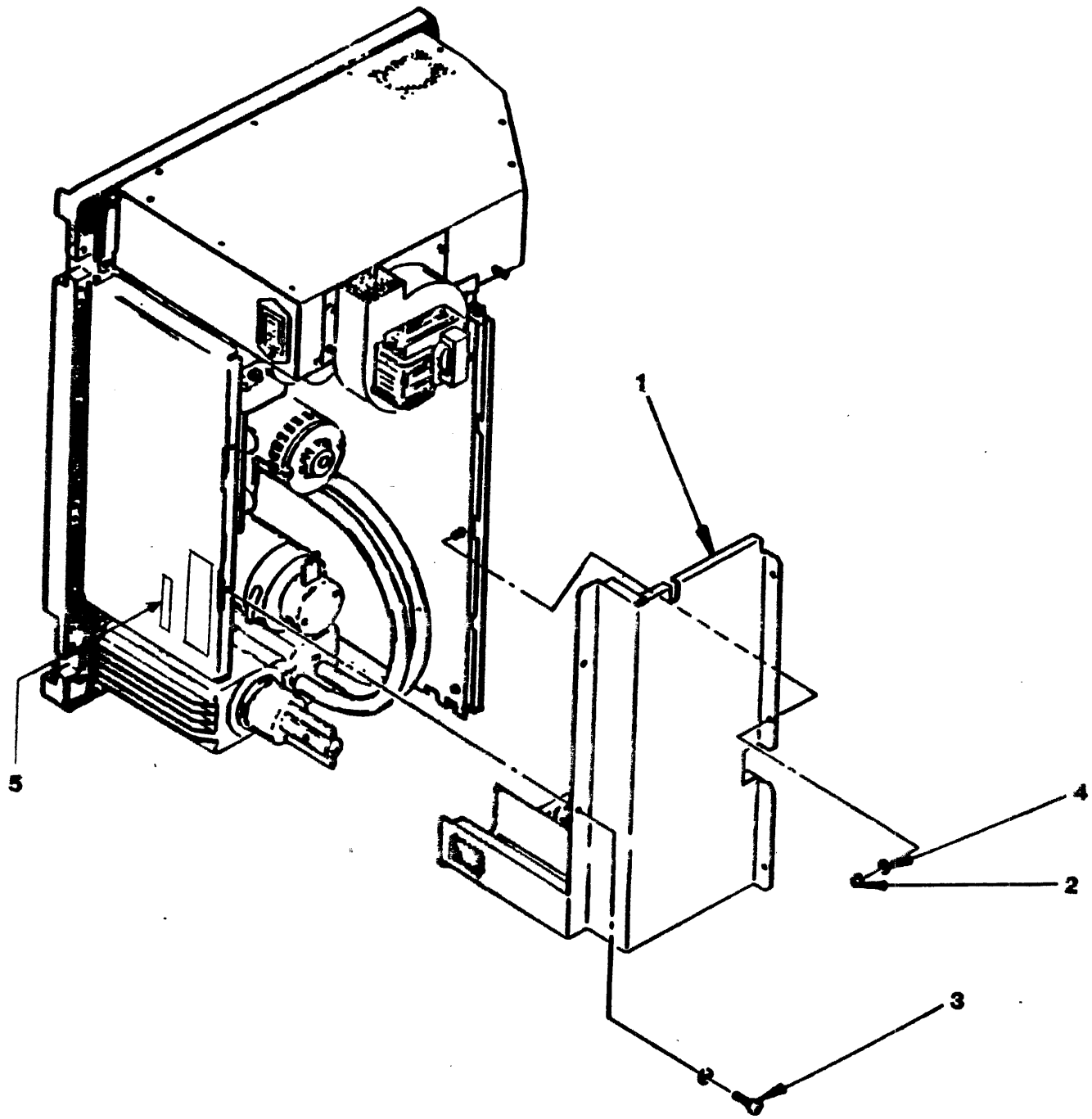

Figure 7-3. Equipment Assembly, Rear View

INDEX NO.	PART CODE	PART NUMBER	DESCRIPTION 1 2 3 4 5 6
3-	NC	7701147X	EQUIPMENT ASSEMBLY, REAR (50/60 HZ)
-1	CNS	77016771	. PANEL ASSEMBLY - ACOUSTICAL
-2	NC	53777902	. NUT & LOCKWSHR, 6-32 .14H .312 HEX
-3	NC	95959725	. SCREW - PAN HD/EXT T LW 6-32 x .375
-4	NC	10125605	. WASHER, FLAT #6
-5	NC	21987646	. LABEL - FCC, RFI, CLASS A, METRIC

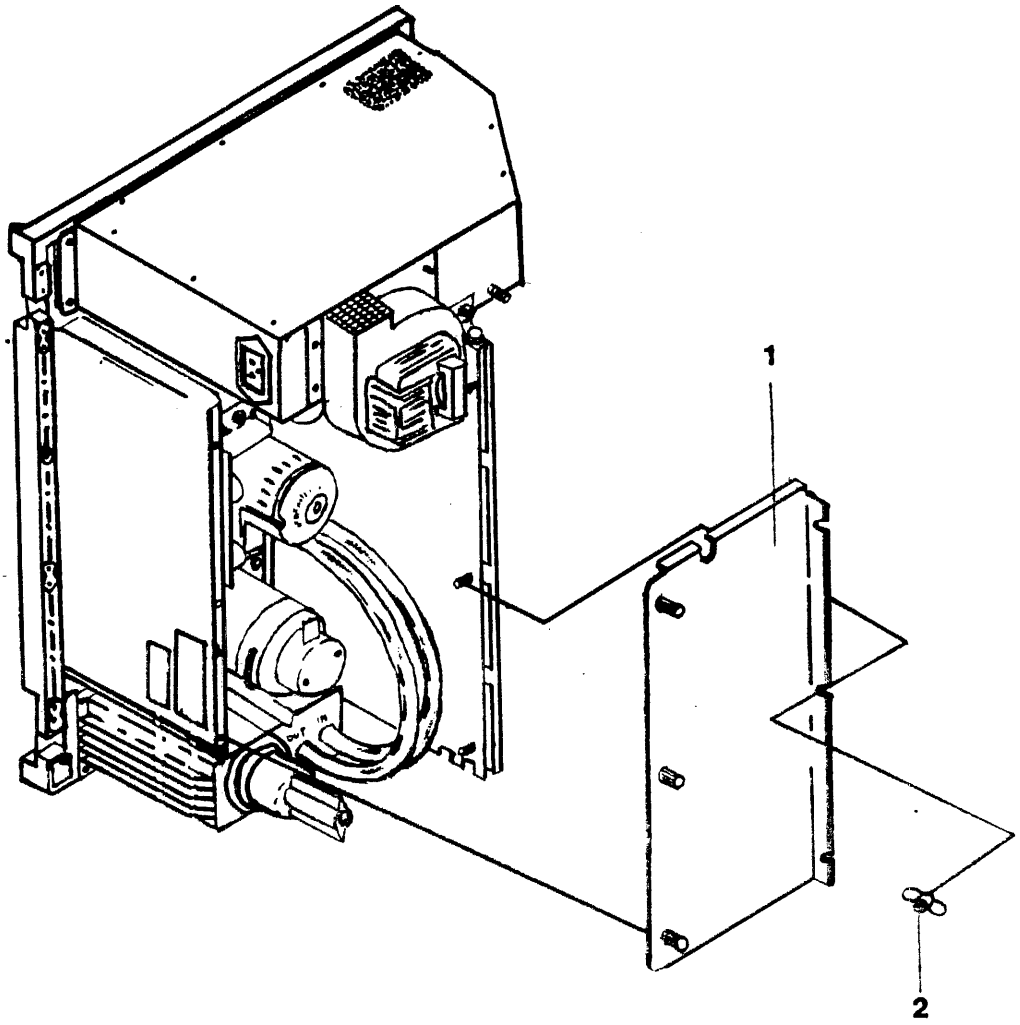

Figure 7-4. Equipment Assembly, Rear View

INDEX NO.	PART CODE	PART NUMBER	DESCRIPTION 1 2 3 4 5 6
4-	NC	7702105X	EQUIPMENT ASSEMBLY, REAR (50/60 HZ)
-1	NC	77023611	. DRIVE COVER ASSY
-2	NC	93031001	. NUT-WING (NC) 6-32
-3	NC	21987646	. LABEL - FCC, RFI, CLASS A, METRIC

S/N 838 and below

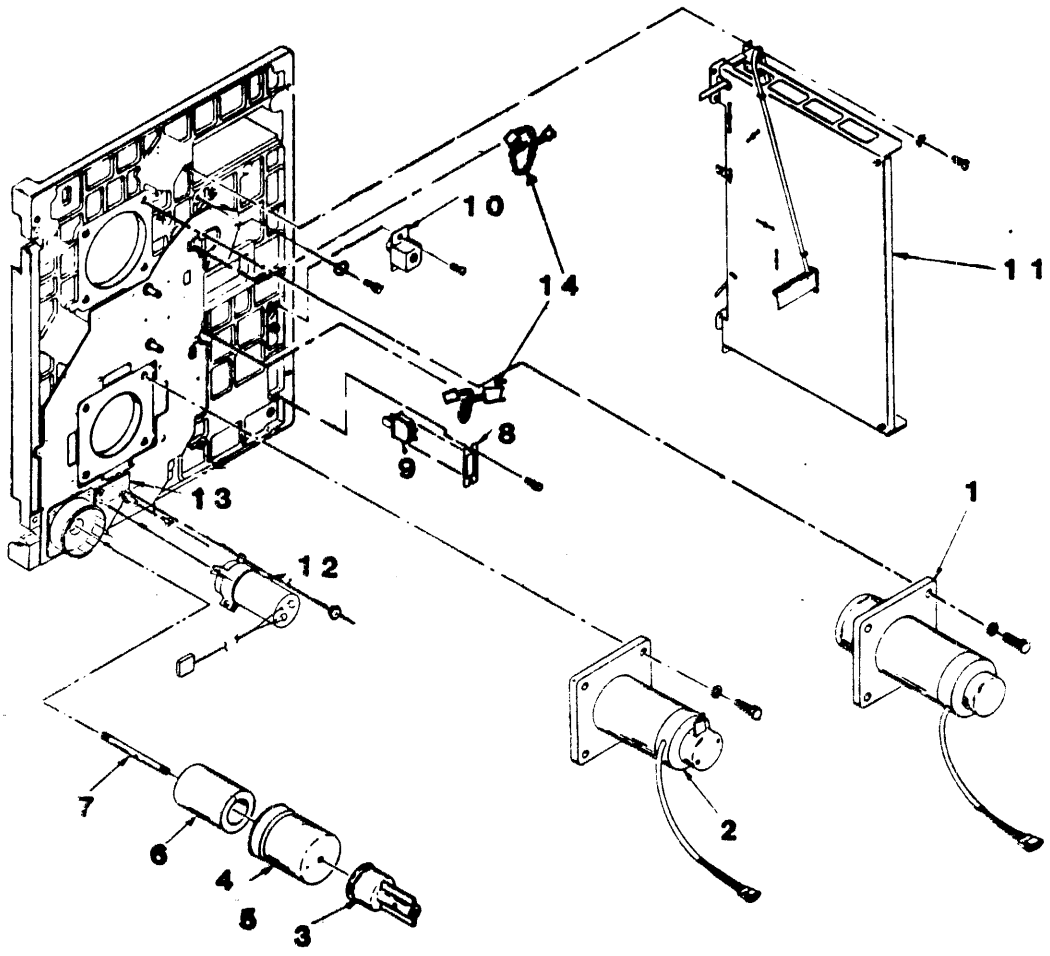

Figure 7-5. Equipment Assembly, Rear View

INDEX NO.	PART CODE	PART NUMBER	DESCRIPTION 1 2 3 4 5 6
5-	NC	7701147X	EQUIPMENT ASSEMBLY, REAR VIEW (50/60 HZ)
-1	*	77006579	. MOTOR ASSEMBLY - SUPPLY REEL
-2	*	77006162	. MOTOR ASSEMBLY - TAKEUP REEL
-3	CNS	77011551	. PRESSURE REGULATOR ASSEMBLY
-4	CNS	77006533	. FILTER CAN ASSEMBLY
-5	NC	94671590	. SLIC SILICONE LUBRICANT
-6	*	95966090	. FILTER
-7	CNS	77007240	. SHAFT, FILTER
-8	NC	77003191	. PLATE, SWITCH
-9	*	92014800	. SWITCH-BASIC
-10	NC	94802306	. FASTENER-ADJUSTABLE PAWL
-11	NC	77011522	. CARD CAGE ASSEMBLY, 2 BD, 11 x 17
-12	NC	77015911	. CAP-CA, 13-17K MF/2 POSN CONN
-13	NC	77015210	. PLATE-ADAPTER CAPACITOR MTG
-14	CNS	77010862	. CABLE ASSEMBLY, PWA TO XDUCER (2 BD) W1 + W9

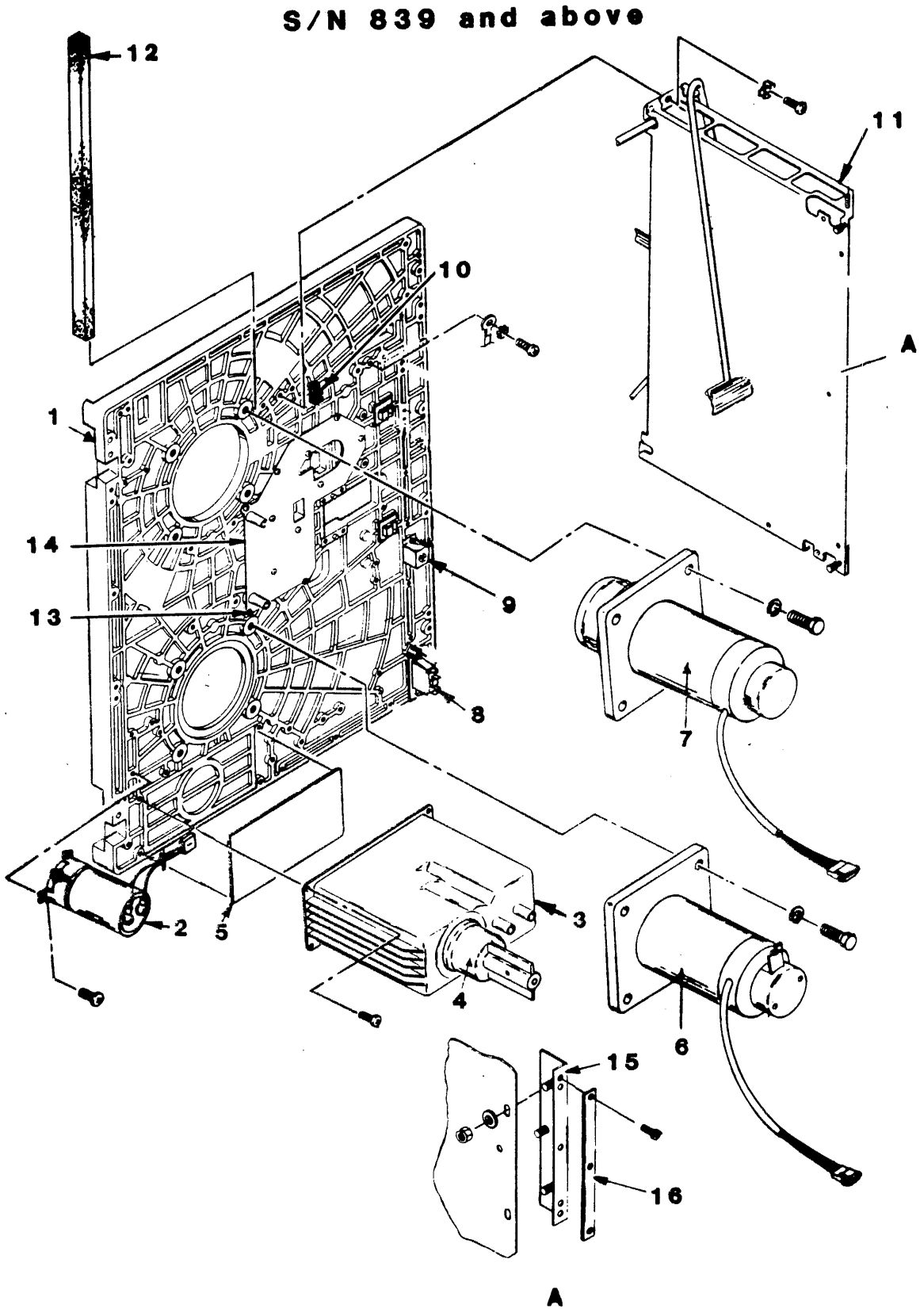

Figure 7-6. Equipment Assembly, Rear

INDEX NO.	PART CODE	PART NUMBER	DESCRIPTION 1 2 3 4 5 6
6-	NC	7702105X	EQUIPMENT ASSEMBLY, REAR (50/60 HZ) (V)
-1		77014361	. TAPE DECK MACH (BLK)
-2	NC	77015912	. CAP-CA, 13-17K, MF/2, SKT/09 LG
-3	NC	77025191	. CHAMBER-AIR
-4	CNS	77011551	. PRESSURE REGULATOR ASSY
-5	CNS	77024250	. GASKET-AIR CHAMBER
-6	*	77006162	. MOTOR ASSY, TAKE-UP REEL
-7	*	77006579	. MOTOR ASSY, SUPPLY REEL
-8	*	95966651	. INTERLOCK SWITCH
-9	NC	94802306	. FASTENER-ADJSTABLE PAWL
-10	NC	95862300	. ANCHOR-STRAP, CA, SCR HOLE, .170D
-11	NC	77011523	. CARD CAGE ASSY, 25 IPS
-12	NC	77016921	. FOAM STRIP, ADHESIVE
-13	NC	77014392	. GASKET-PLENUM
-14	NC	77025261	. COVER-PLENUM
-15	NC	77022850	. BRACKET-I/O, CA
-16	NC	77017190	. STRIP-CLAMP, CA
-	CNS	95966090	. FILTER
-	NC	77015431	. GASKET-FILTER

S/N 838 and below

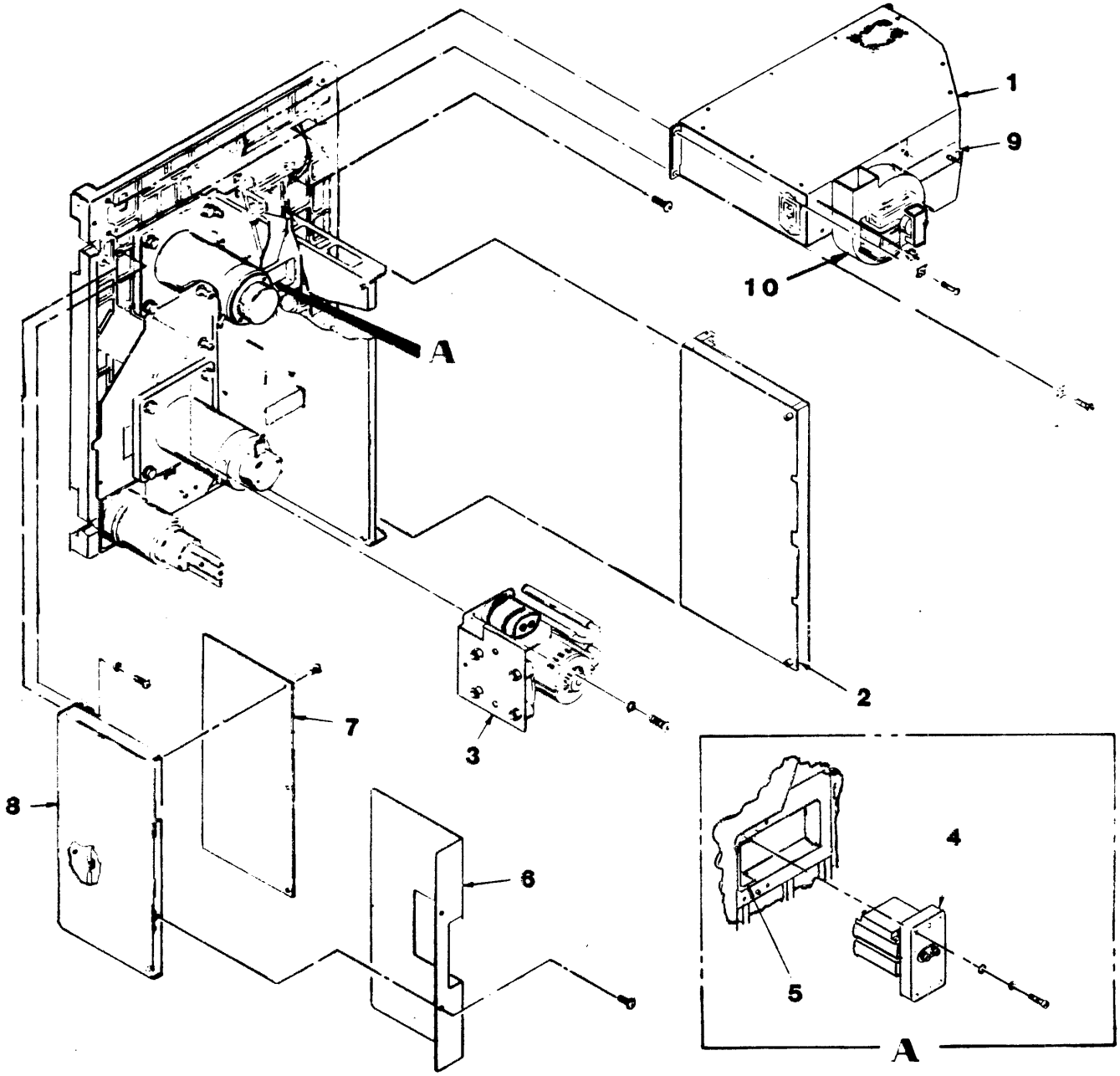

Figure 7-7. Equipment Assembly, Rear

INDEX NO.	PART CODE	PART NUMBER	DESCRIPTION 1 2 3 4 5 6
7-	NC	7701147X	EQUIPMENT ASSEMBLY, REAR VIEW (50/60 HZ)
-1	*	77009931	. POWER SUPPLY (60 HZ)
-1	*	77009932	. POWER SUPPLY (50 HZ)
-2	NC	7701151X	. CARD SET ASSEMBLY
-	CNS	77011860	. . PIVOT - LOGIC CARD CAGE
-	CNS	77015857	. . R/W/S PWA, READ AMP CAL. SPEC
-	CNS	77041137	. . PWA - FORMATTER/CONTROL
-3	*	77011532	. COMPRESSOR ASSEMBLY, BRACKET & CAP (50/60 HZ)
-4	*	77015881	. MAG HEAD INSTALLATION & INSTRUCTION KIT
-5	NC	77007090	. LINER, SILICON FOAM RUBBER
-6	NC	77011950	. COVER, POWER AMP
-7	*	7704119X	. PWA - POWER AMP
-8	NC	77011960	. BRACKET - POWER AMP PWA MOUNTING
-9	NC	77014410	. BRACKET - SUPPORT, CARD CAGE
-10	NC	95968431	. BLOWER

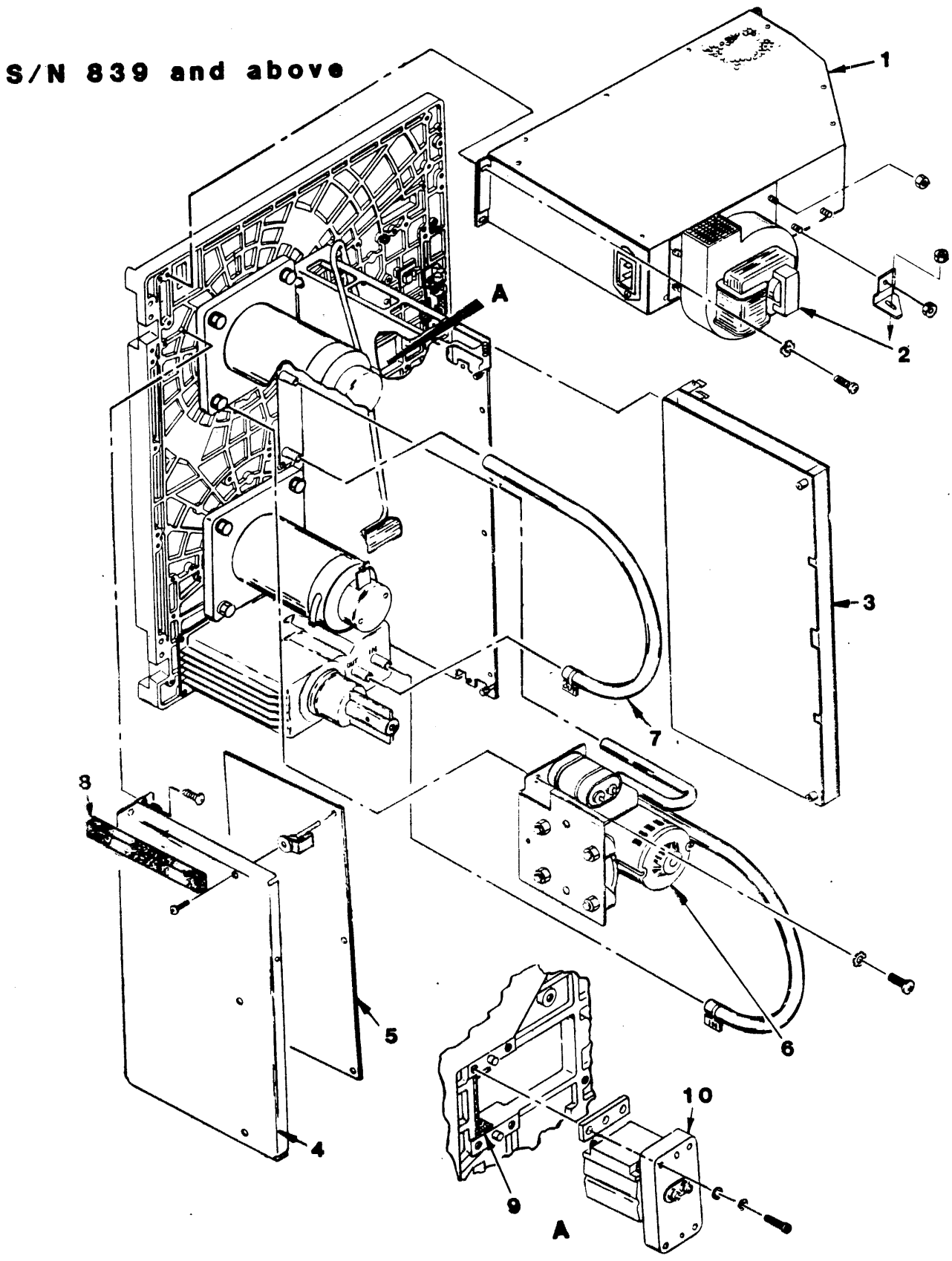

Figure 7-8. Equipment Assembly, Rear

INDEX NO.	PART CODE	PART NUMBER	DESCRIPTION 1 2 3 4 5 6
8-	NC	7702105X	EQUIPMENT ASSEMBLY, REAR (50/60 HZ) (V)
-1	*	77009935	. POWER SUPPLY ASSEMBLY (60 HZ)
-1	*	77009936	. POWER SUPPLY ASSEMBLY (50 HZ)
			-----*-----
-2	*	95968431	. BLOWER
-3	NC	77011512	. CARD SET ASSEMBLY, 25 IPS
-4	NC	77023560	. BRACKET-POWER AMP
-5	*	7704119X	. PWA-POWER AMP
-6	*	77011535	. COMPRESSOR ASSY, BKRT + CAP (60 HZ)
-6	*	77006336	. COMPRESSOR ASSY (50 HZ)
-7	NC	77011937	. TUBING-MODIFICATION
-8	NC	77016938	. FOAM STRIP, ADHESIVE
-9	NC	77019544	. FOAM-STRIP, ADH, .12T, .50WI, .50L
-10	*	77019544	. MAG HD INSTAL & INSTRUC KIT
-11		94275200	. CLAMP HOSE

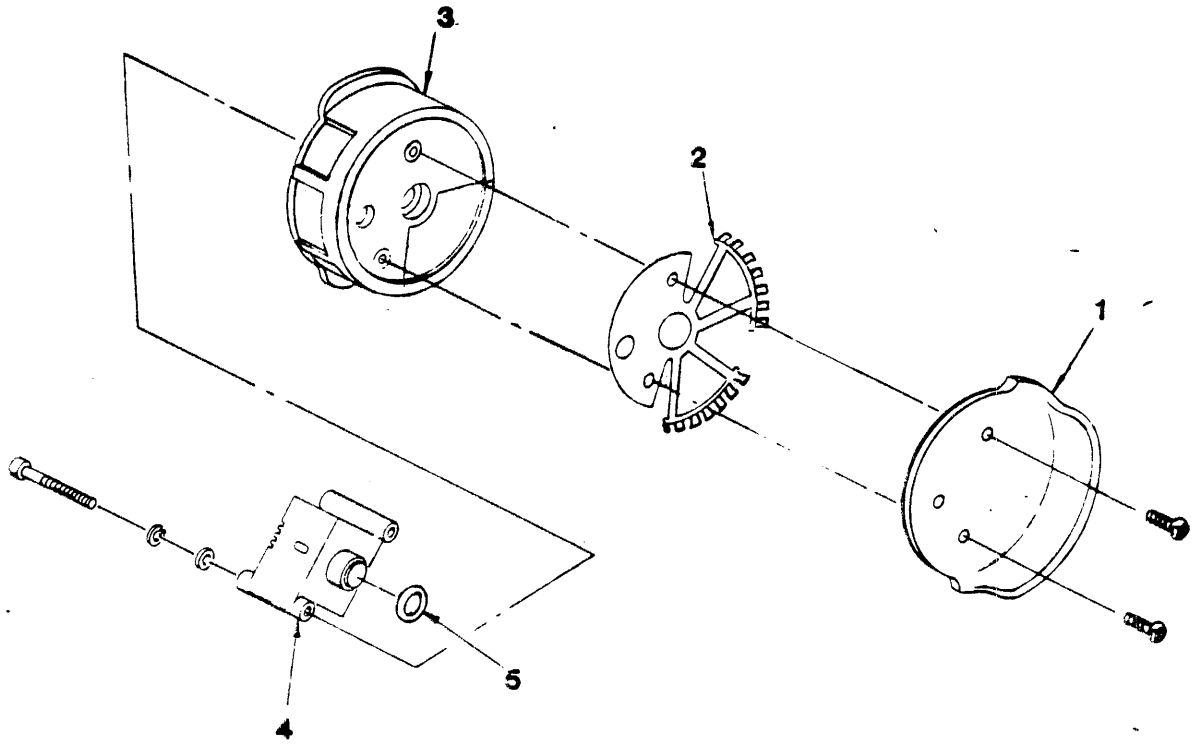

Figure 7-9. Air Bearing Assembly, Lower

INDEX NO.	PART CODE	PART NUMBER	DESCRIPTION 1 2 3 4 5 6
9-	CNS	77004333	AIR BEARING ASSY, LOWER
-1	NC	77005030	. GUARD SPRING GUIDE, LOWER
-2	NC	77004254	. GUIDE-TAPE, SPRING AIR BEARING
			-----*-----
-3	NC	77004361	. FOIL + HOUSING ASSY, LOWER
			-----*-----
-4	NC	95967710	. TRANSDUCER PRESS, SOLID-STATE
-5	NC	95870205	. 'O' RING, SILICON

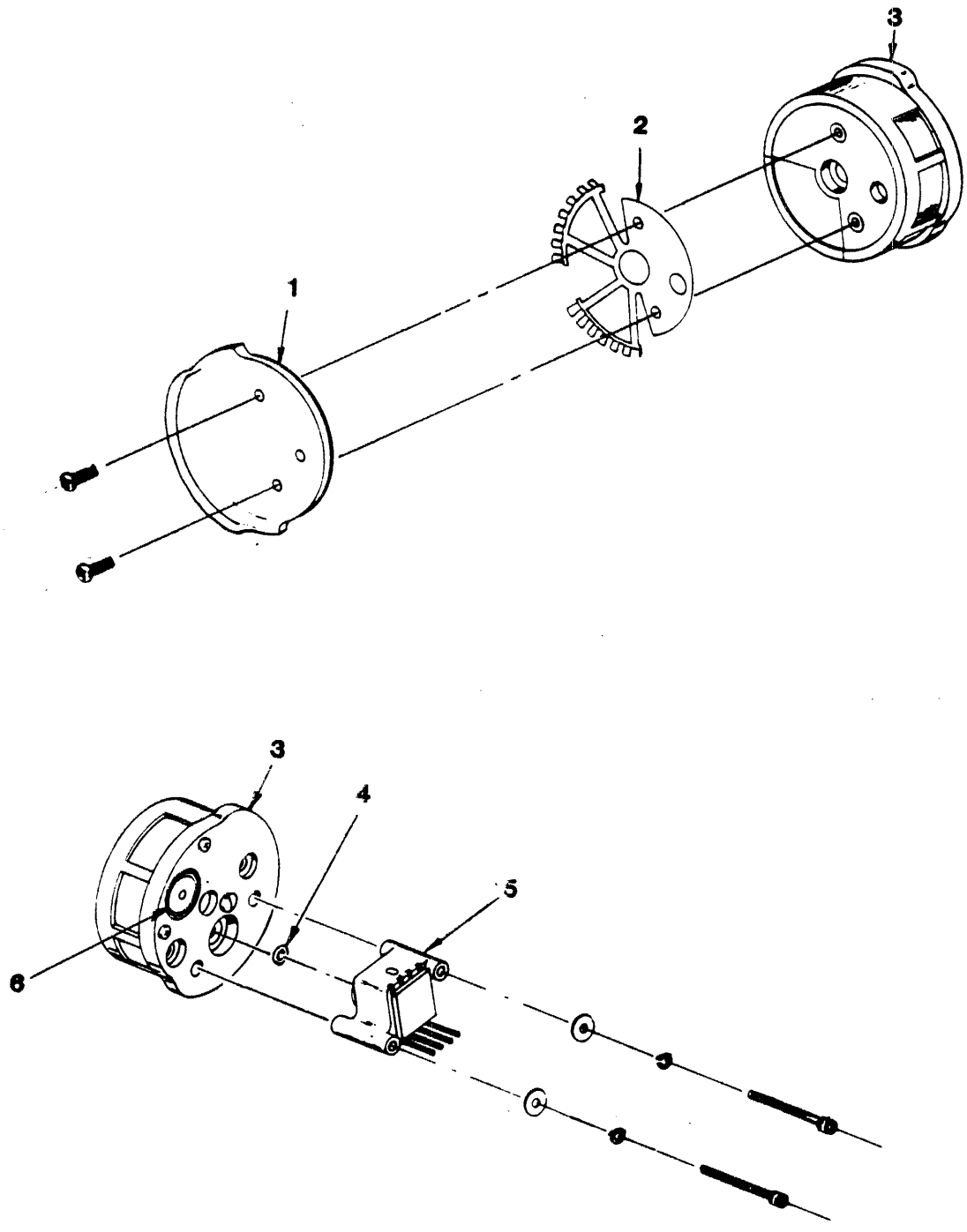

Figure 7-10. Air Bearing Assembly, Upper

INDEX NO.	PART CODE	PART NUMBER	DESCRIPTION 1 2 3 4 5 6
10-	CNS	77004213	AIR BEARING ASSY, UPPER
-1	NC	77005020	. GUARD SPRING GUIDE, UPPER
-2	NC	77004255	. GUIDE-TAPE, SPRING AIR BEARING
			-----*-----
-3	NC	77004241	. FOIL + HOUSING ASSY, UPPER
-4	NC	95870205	. 'O' RING, SILICON
			-----*-----
-5	NC	95967710	. TRANSDUCER PRESS, SOLID-STATE
-6	NC	95870206	. 'O' RING,SILICON

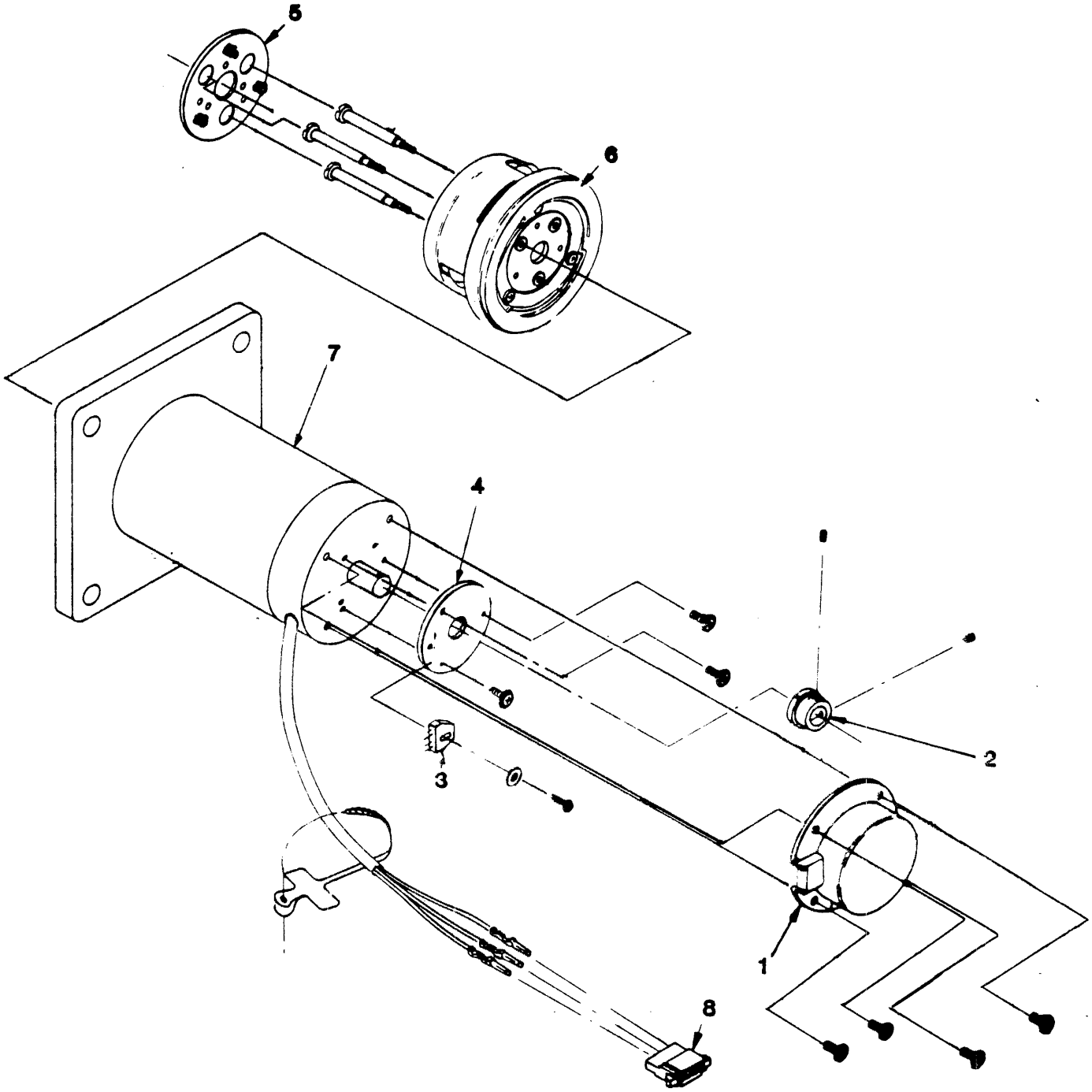

Figure 7-11. Motor Assembly, Supply Reel

INDEX NO.	PART CODE	PART NUMBER	DESCRIPTION 1 2 3 4 5 6
11-	*	77006579	MOTOR ASSEMBLY, SUPPLY REEL
-1	NC	77002240	. COVER, TACHOMETER
			-----*-----
-2	*	77007560	. HUB ASSEMBLY - TACHOMETER
-3		95966082	. SENSOR ASSEMBLY
-4		77002230	. PLATE, MOUNTING, SENSOR
			-----*-----
-5	CNS	77011180	. COVER - SUPPLY REEL HUB
-6	*	77003916	. HUB ASSEMBLY - SUPPLY REEL
-7	NC	77015532	. MOTOR ASSEMBLY, REEL
-8	NC	95929001	. CONNECTOR, HSG, PIN/SKT

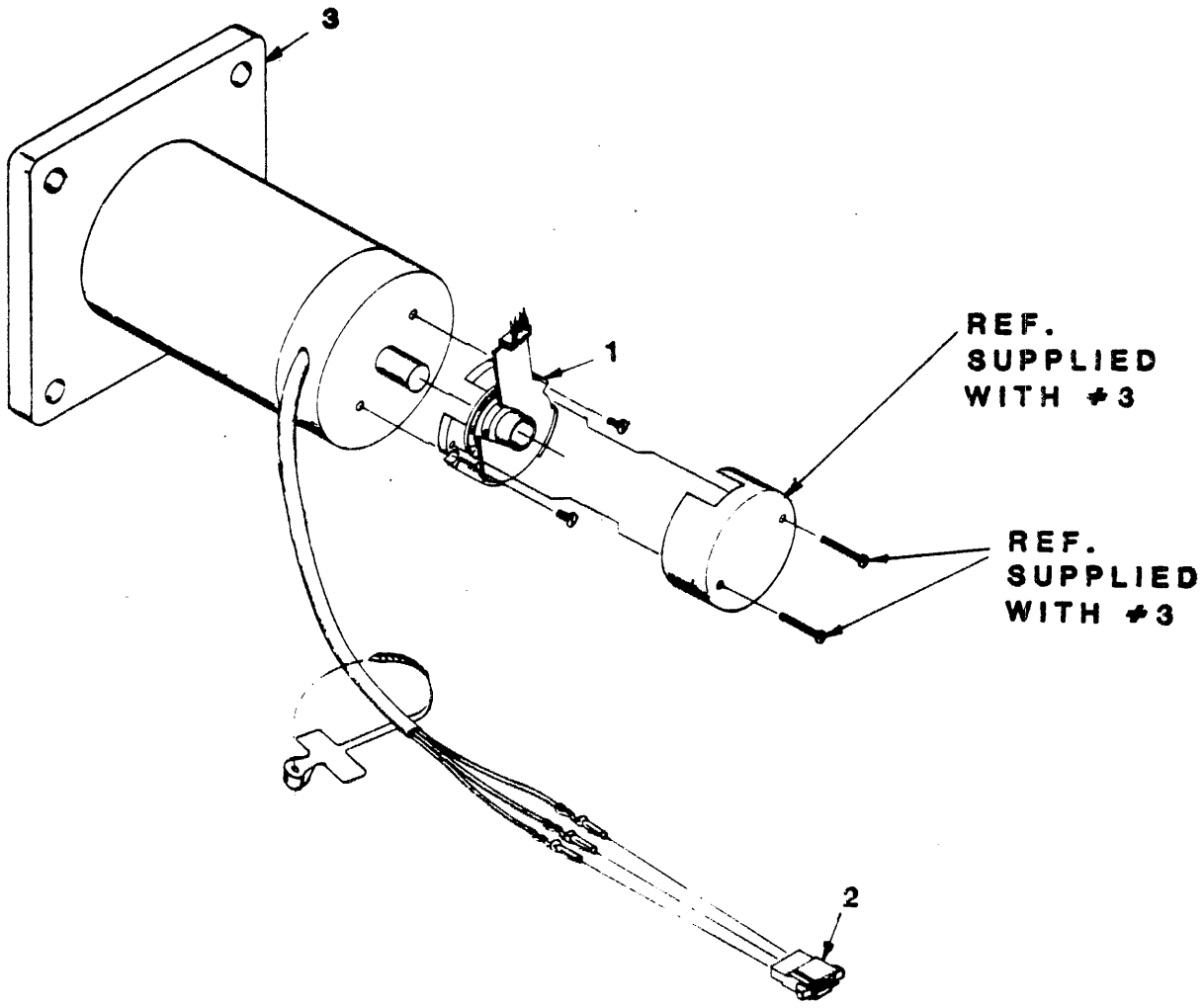

Figure 7-12. Motor Assembly, Take-Up Reel

INDEX NO.	PART CODE	PART NUMBER	DESCRIPTION 1 2 3 4 5 6
12-	*	77006162	MOTOR ASSEMBLY, TAKE-UP REEL
-1	NC	95966061	. TACHOMETER, 1000 LINE
			-----*-----
-2		95929001	. CONNECTOR, HSG, PIN/SKT
-3	NC	77015532	. MOTOR ASSEMBLY, REEL

PWA COMPLEMENT

PART CODE	PART NUMBER	DESCRIPTION
*	77041193	POWER AMP
*	7704112X	READ/WRITE/SERVO
*	7704113X	FORMATTER/CONTROL
*	7704207X	FORMATTER/CONTROL

Pictorials are shown in Section 5 (DIAGRAMS)

HARNESS AND CABLE ASSEMBLIES

PART CODE	PART NUMBER	DESCRIPTION
CNS	77010291	HARNESS ASSEMBLY - CAPACITOR
CNS	77010862	CABLE ASSEMBLY W1 & W9
CNS	77011622	CABLE ASSEMBLY W3
CNS	77015562	CABLE ASSEMBLY W5
CNS	77006552	CABLE ASSEMBLY W6
CNS	77011591	CABLE ASSEMBLY W7
CNS	77011581	CABLE ASSEMBLY - SIG, FC PWA/PS-W2
CNS	77014171	CABLE ASSEMBLY - AC PWR, CB1/PS PWA
CNS	77008281	CABLE ASSEMBLY - 34 COND OPER. PNL

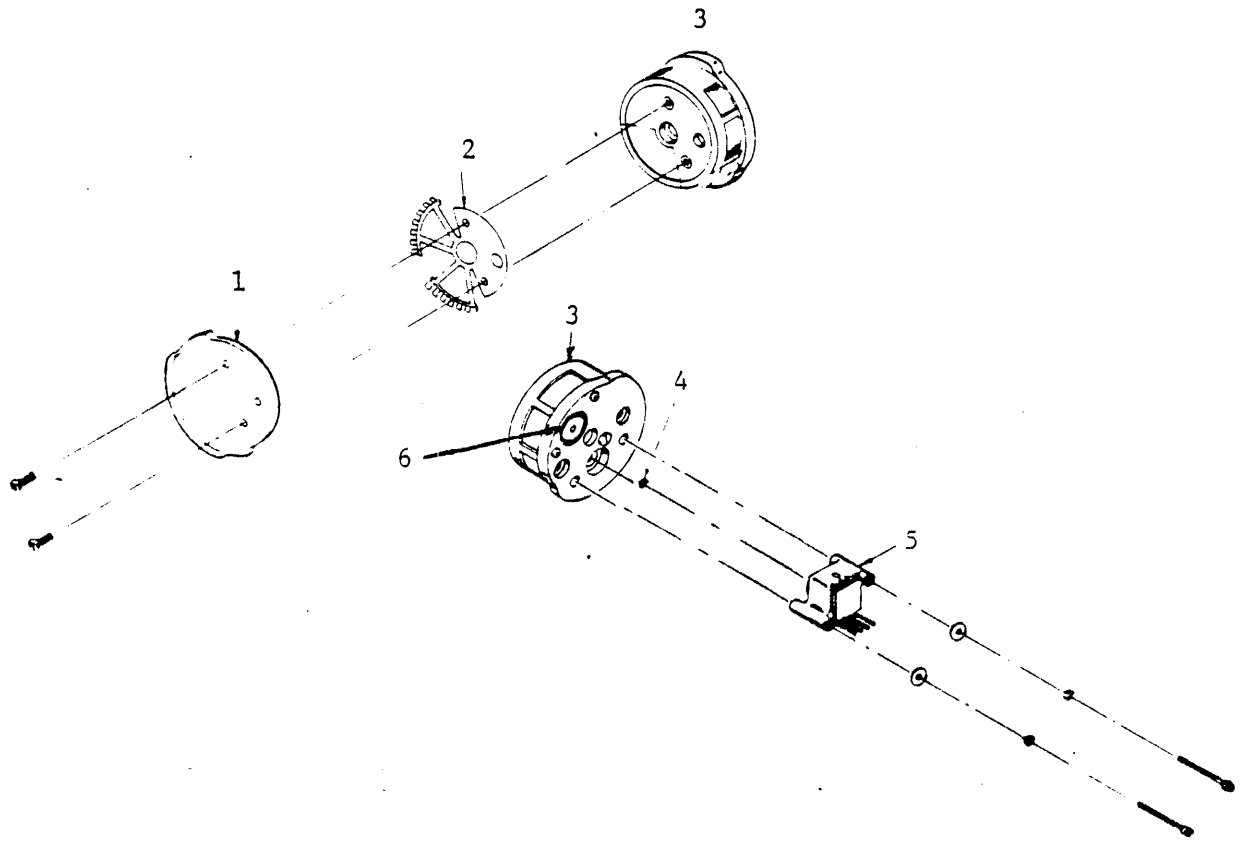

NOTE - KIT, AIR BEARING P/N 77015961 HAS PARTS 2, 5, & 6

INDEX NO.	PART CODE	PART NUMBER	DESCRIPTION 1 2 3 4 5 6
8-	CNS	77004333	AIR BEARING ASSEMBLY - LOWER
-1	NC	77005030	. GUARD SPRING GUIDE LOWER
-2	NOTE	77004254	. GUIDE - TAPE, SPRING AIR BEARING
-3	NC	77004361	. FOIL & HOUSING ASSEMBLY, LOWER AIR BEARING
-4	NOTE	95870205	. 'O' RING, SILICON
-5	NOTE	95967710	. TRANSDUCER, PRESS, SOLID STATE
-6	NOTE		. 'O' RING, SILICON (SEE FIGURE 1)

FIGURE 8 AIR BEARING ASSEMBLY - LOWER

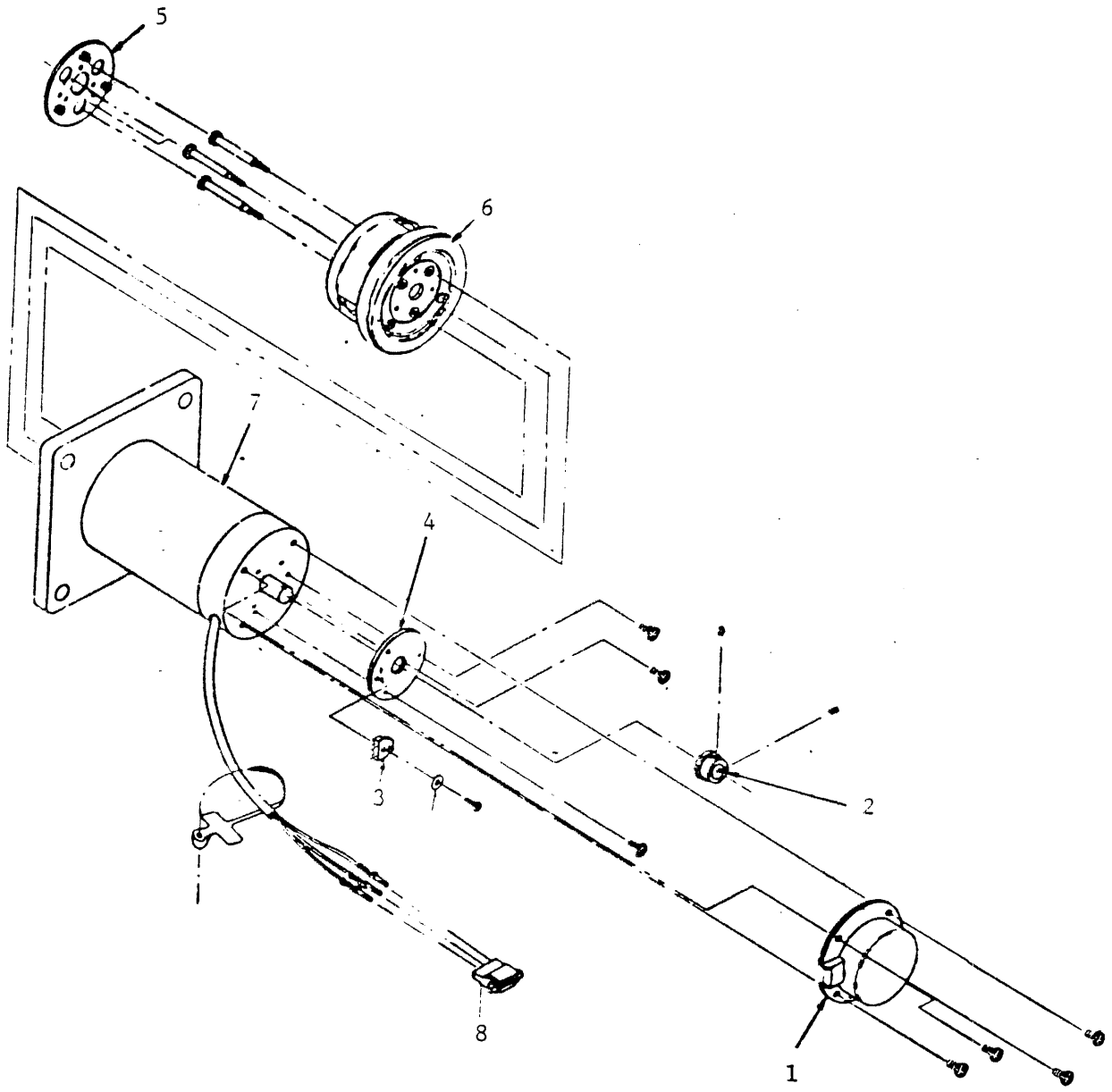

FIGURE 9 MOTOR ASSEMBLY, SUPPLY REEL

INDEX NO.	PART CODE	PART NUMBER	DESCRIPTION 1 2 3 4 5 6
9-	*	77006579	MOTOR ASSEMBLY, SUPPLY REEL
-1	NC	77002240	. COVER, TACHOMETER
-2	*	77007560	. HUB ASSEMBLY - TACHOMETER
-3		95966082	. SENSOR ASSEMBLY
-4		77002230	. PLATE, MOUNTING, SENSOR
-5		77011180	. COVER - SUPPLY REEL HUB
-6	*	77003916	. HUB ASSEMBLY - SUPPLY REEL
-7	NC	77015532	. MOTOR ASSEMBLY, REEL
-8	NC	95929001	. CONN - HSG, PIN/SKT 3 UNIV-PLUG

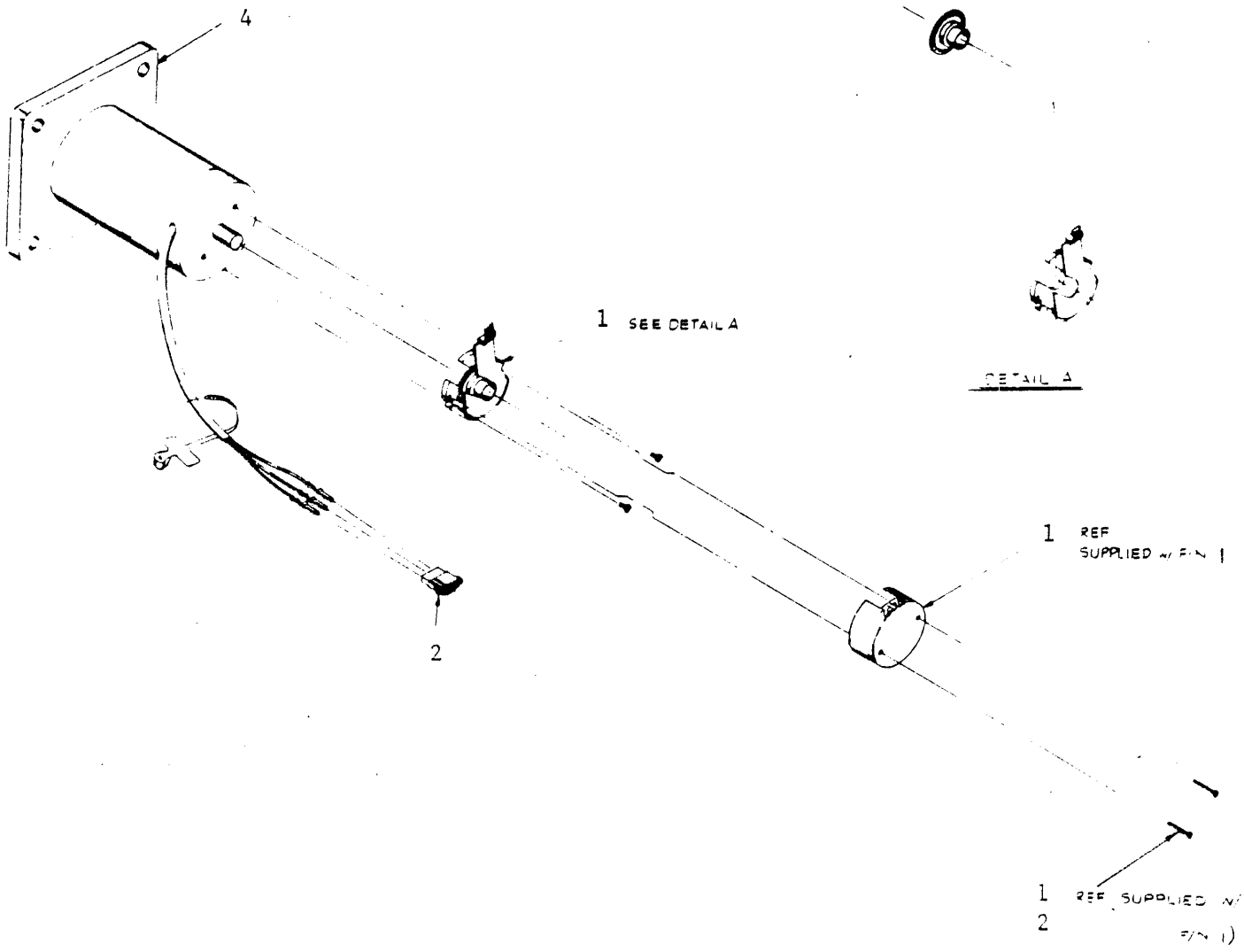

INDEX NO.	PART CODE	PART NUMBER	DESCRIPTION 1 2 3 4 5 6
10-	*	77006162	MOTOR ASSEMBLY, TAKE-UP REEL
-1	NC	95966061	. TACHOMETER, 1000 LINE
-2		95929001	. CONNECTOR, HSG, PIN/SKT
-3		N/A	
-4	NC	77015532	. MOTOR ASSEMBLY, REEL

FIGURE 10 MOTOR ASSEMBLY, TAKE-UP REEL

HARNESS AND CABLE ASSEMBLIES

INDEX NO.	PART CODE	PART NUMBER	DESCRIPTION 1 2 3 4 5 6
			HARNESS AND CABLE ASSEMBLIES
			-----*-----
-	CNS	77015562	CABLE ASSEMBLY-W5, WRITE FLAT
-	NC	15180223	. CONNECTOR, PLUG, 30 POSN 2 ROW
-		15183200	. CONNECTOR, PLUG, 30 POSN 2 ROW
		95813200	. CONNECTOR, RECEPTACLE
-		95932800	. KEY, PLUG
-	NC	95967395	. CA-RBN, 30 COND 28 G 300V
			-----*-----
-	CNS	77010291	HARNESS ASSEMBLY-CAPACITOR
-	NC	95929001	. CONNECTOR-HOUSING, PIN/SKT 3 UNIV-PLUG
-		95933400	. CONTACT-SKT 20-14G 130/MAX (UNIV) TN
-		95867007	. TERM R22-18 INS 120 SCR RED
-		52810004	. WIRE-ELECT INSUL 18G YELLOW
-		94277409	. STRAP-MKR TIE 18LB .093W 4LG
-		52810002	. WIRE-ELECT INSUL 18G RED
-		52810003	. WIRE-ELECT INSUL 18G ORANGE
-	NC	95933401	. CONT-SKT 20-14G 200/MAX (UNIV) TN
			-----*-----
-	CNS	77014171	CABLE ASSEMBLY-AC PWR, CB1/PS PWA
-	NC	95929002	. CONNECTOR-HSG, PIN/SKT, 4 UNIV-PLUG
-		95933400	. CONTACT-SKT 20-14G 130/MAX (UNIV) TN
-		95963311	. TERM-SKT, INS .032 x .250 TAB 14-16
-		15003301	. WIRE, 18 AWG
-		15003306	. WIRE, HKP, 18 GAUGE
-		94277409	. STRAP-MKR TIE 18 LB .093W 4 LG
-	NC	94277400	. STRAP-CA TIE 18 LB .091W 3.63L
			-----*-----
-	CNS	77011581	CABLE ASSEMBLY-SIG, FC PWA/PS-W2
-	NC	95967360	. CONNECTOR-PLG, SKT 10 POSN .05SP RBN
-	NC	95967340	. CABLE RIB, 20AWG .05SP, 10 COND
-	NC	94277407	. STRAP-MKR TIE, 18LB .091W 3.63L
			-----*-----
-	CNS	77021031	CABLE ASSEMBLY-READ HEAD
-	NC	95967670	. CABLE 28GA, 18 COND RBN Z SHIELD
-		15180221	. CONNECTOR-PL 20SKT, .100SP 2 ROW
-		15180220	. CONNECTOR-PL 20 SKT, .100SP 2 ROW
-	NC	95932800	. KEY, PLUG
			-----*-----
-	CNS	77010862	CABLE ASSEMBLY-W1 & W9, PWA TO XDUCER
-	NC	51870304	. CONNECTOR, HSG, SKT 4 POSN
-		94245618	. CONTACT, SKT 22-26 BERG
-		24548309	. WIRE, 24 GA 487041 8
-	NC	94277400	. STRAP-CABLE TIE, 18 LB

INDEX NO.	PART CODE	PART NUMBER	DESCRIPTION 1 2 3 4 5 6
-	CNS	77008281	CABLE ASSEMBLY-34 COND OPERATOR PNL
-	NC	95967346	. CABLE-RBN 34 COND 28GA 300V7/36PVC
-	NC	95967365	. CONNECTOR-PLG, SKT 34 POSN .05SP RBN
-	NC	95116300	. TAPE, ELECTRICAL 3M-ND 33
			-----*-----
-	CNS	77011622	CABLE ASSEMBLY-W3, RW/ALL SENSORS
			W3 P1
-	NC	95967410	. CONNECTOR-SKT .10SP x .300 DBL ROW 14 POS
			W3 P2
-		15014443	. CONNECTOR, HOUSING, 4 POSN
			W3 P5
-		77613558	. CONNECTOR-SKT 6 POSN .10SP-RBN CA
			W3 P6
-		77613558	. CONNECTOR-SKT 6 POSN .10SP-RBN CA
			W3 P7
-		95967361	. CONNECTOR- PLUG, SKT 14 POSN .05SP RBN
		95967348	. CA - RBN 44 COND 28G, 300V, 7/36PVC
-		95967367	. CONNECTOR-PLG, SKT 44 POSN .05SP RBN
-		15014424	. CONTACT-SOCKET, 22-30G, .062
-		95963318	. TERM-SKT, INS .032 x .187 TAB 22-18
-		15003408	. WIRE 20G .060 INS 888 RVC 300 V 10/30
-	NC	94277407	. STRAP-MKR TIE 18LB .091W 3.63L
			-----*-----
-	CNS	77011591	CABLE ASSEMBLY-W7, PWR/AMP/FC + RW
			W7 P1
-	NC	95929006	. CONNECTOR-HSG, PIN/SKT 15 UNIV-PLUG
-		95933400	. CONT-SKT 20-14G 130/MAX (UNIV) TN
-		95933401	. CONT-SKT 20-14G 200/MAX (UNIV) TN
			W7 P2
-		95929004	. CONNECTOR-HSG, PIN/SKT 9 UNIV-PLUG
-		95933400	. CONT-SKT 20-14G 130/MAX (UNIV) TN
-		95858700	. WIRE 14G 120 INS 0 PVC 600V 41/30
-		95858702	. WIRE 14G 120 INS 2 PVC 600V 41/30
-		95858713	. WIRE 14G 120 INS 24 PVC 600V 41/30
-		15003240	. WIRE-ELECT, 16 AWG RED/WHT
-		95858727	. WIRE-ELECT INS, 14AWG, BLUE-WHT
-		77011611	. CA-PWA PWR CONN
-		95867014	. TERM-R, INS 8/10, 16-14G 170/
-		95867013	. TERM-R, INS CRP 16-14
-		94277400	. STRAP-CA TIE 18LB .091W 3.63L
-	NC	94277401	. STRAP-CA TIE 50LB .184W 7.31L

PWA COMPLIMENT

TITLE	ASSEMBLY
Control Panel	7700591X
Read/Write/Servo	7704112X
Formatter/Control	7704113X
Formatter/Control	7704207X
Power Supply	7704045X
Power Supply Control	7704046X
Power AMP	7704119X
Voltage Select	7704059X

PICTORIALS ARE SHOWN IN SECTION 5 (DIAGRAMS)

PUBLICATION CHANGE NOTICE

Streaming Tape Unit
92181 - Vertical Mount
Publication No. 49769000
Hardware Maintenance Manual

Streaming Tape Unit
92181 - Horizontal Mount
Publication No. 49769100
Hardware/Reference Maintenance Manual

Date: 02-25-86

Change maintenance manuals as follows:

ECO PB 51833 incorporated.

Pub. No. 49769000
Pub. No. 49769100
Page 4-5

The power supply accepts regulated inputs of 120 VAC or 220-240 VAC power, with the only change in configuration being the positioning of the voltage select PWA on (P/N 7700993X) power supplies or positioning of the voltage select plug on (P/N 7702934X) power supplies. A functional description of this change is discussed in succeeding paragraphs. The major function of the power supply is to provide ac power to the cooling fan and pneumatic pump, to generate dc voltages used throughout the transport, and to provide shut-down capabilities in the event of abnormal voltage conditions.

PHYSICAL DESCRIPTION

Power supply P/N 7700993X components consist of the AC input receptacle, line filter, circuit breaker (mounted on the top front of the tape deck), voltage select PWA, main power supply PWA, and power supply control PWA. Power supply P/N 7702934X components are the same as power supply P/N 7700993X except a voltage select plug is used in place of a voltage select PWA.

Pub. No. 49769000
Pub. No. 49769100
Page 4-5, Added to Figure 4-2.

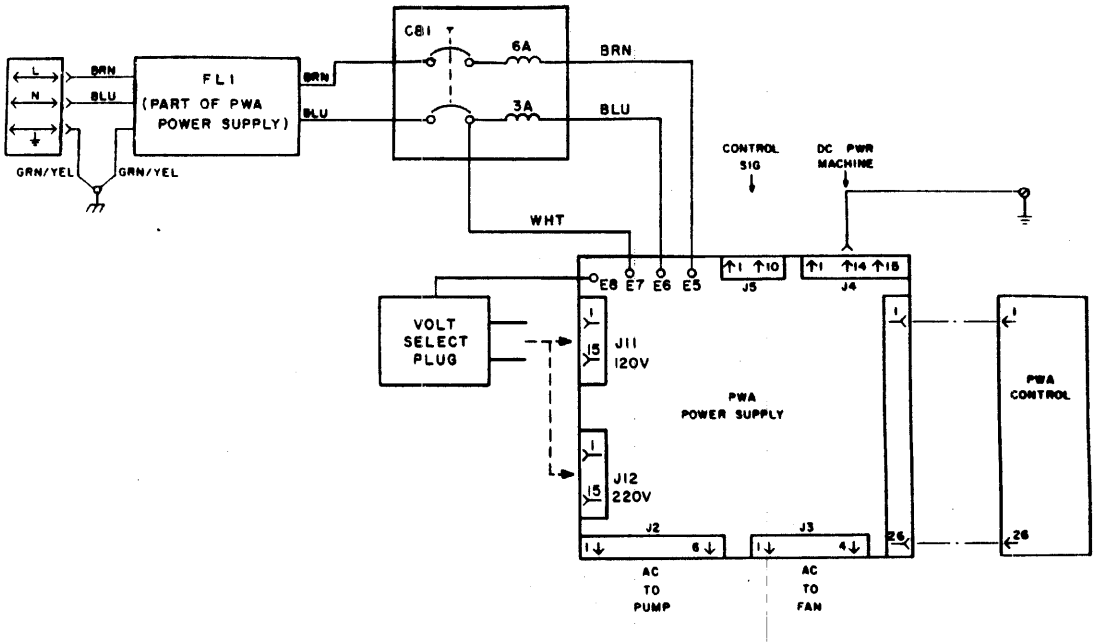

Pub. No. 49769000
Pub. No. 49769100
Page 4-6, Voltage Select Plug description added.

Voltage Select Plug (7702934X Power Supplies)

The voltage select plug consists of a 15-pin connector with a cable strain relief mounted on top. The plug is hard-wired to point E8 on the main power supply PWA. When 120V input is provided, the voltage select plug is inserted in the 120V receptacle (J11) on the main power supply PWA. When 220-240V input is provided, the voltage select plug is inserted in the 220V receptacle (J12) on the main power supply PWA.

Pub. No. 49769000
Pub. No. 49769100
Page 4-6, Voltage added to Regulated DC Voltages description.

- Regulated DC Voltages - The regulated DC voltages generated on the main PWA include +5V, -5.2V, -6V, ± 15V, +25V and +38V. The circuits consist of output transformers, full wave rectifiers, filtering networks and regulators.

Pub. No. 49769000
Pub. No. 49769100
Page 4-7, Added to Figure 4-3.

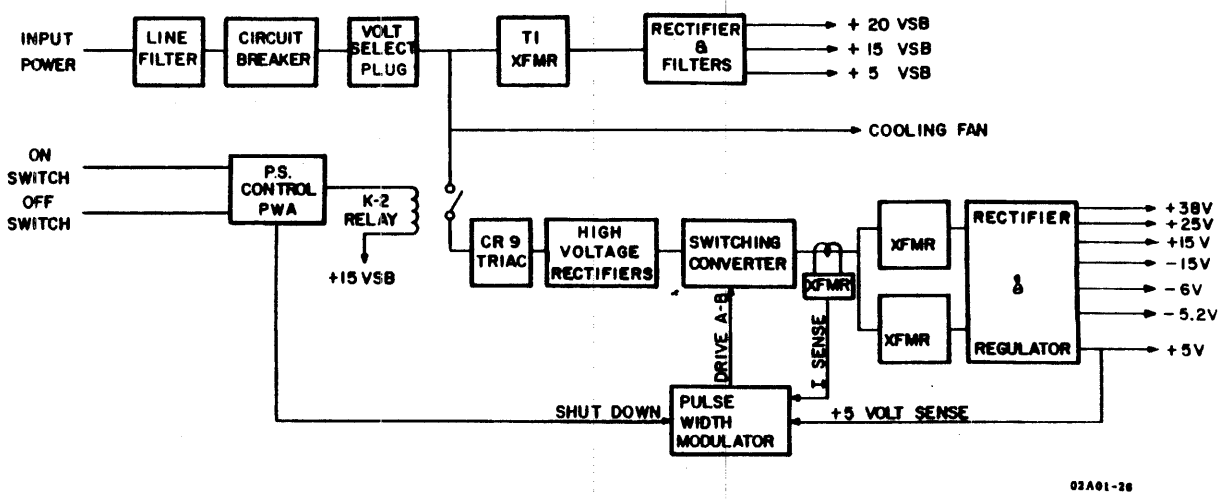

Pub. No. 49769000
Pub. No. 49769100
Page 4-8, Input Power Selection description changed.

Input Power Selection

Input power (120V or 220-240V) is applied from the power line cord connected to the power supply receptacle and into a line filter for noise suppression. Power is then supplied to the transport power switch (circuit breaker) located on the tape deck. The switch portion of the circuit breaker is labeled 1 (ON) and 0 (OFF). With the circuit breaker placed in the 1 position, input power is routed through connectors and into the voltage select PWA on 7700993X Series power supplies or the voltage select plug on 7702934X Series power supplies. It is, at this point, that circuit selection is made for either 120V or 220-240 VAC. Refer to figure 4-4 for circuit differences.

7702934X Series Power Supplies

If 120V input power is being applied, the voltage select plug is inserted in the 120V receptacle (J11) on the main power supply PWA. If an overload condition is present at transformer T1, the F1 and/or F2, 1/8A fuses will blow. The fuses are situated so that any external taps of the primary (i.e., pneumatic pump operation) do not affect the fuses, which are used only for detection of an overload condition at transformer T1.

If 220-240V input power is being applied, then the voltage select plug is inserted in the 220V receptacle on the main power supply PWA. With this configuration, the two primaries of transformer T1 are wired in series, with F1 and F2 fuses in series to the circuit.

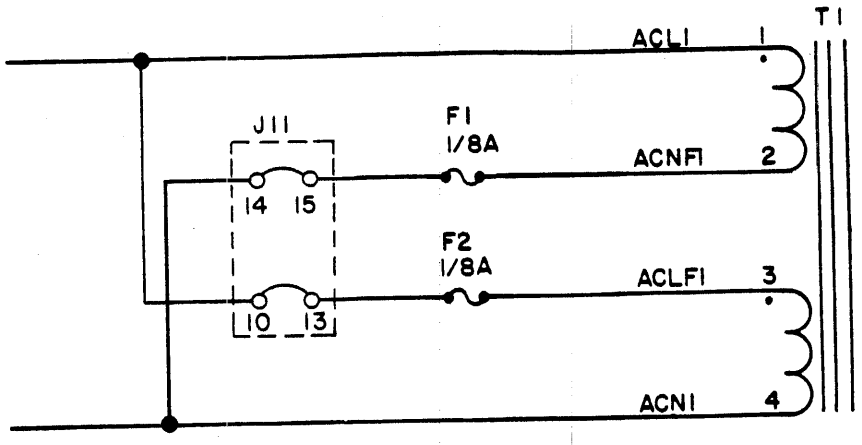

A. 120 VAC Power Input

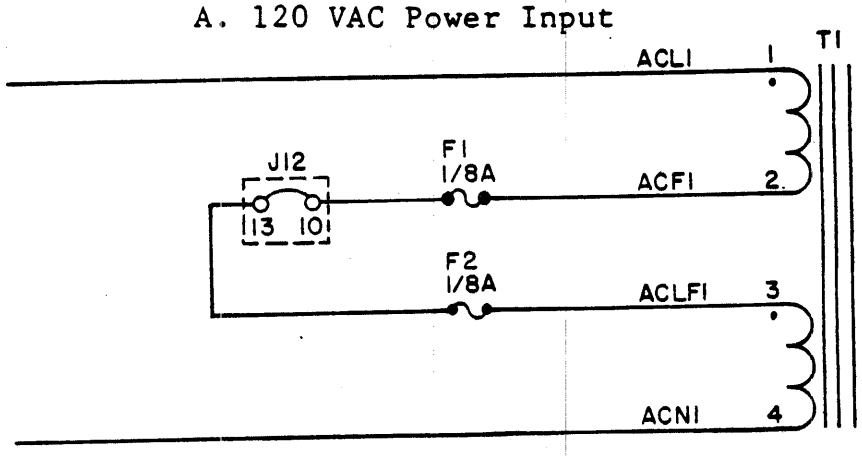

B. 220-240 VAC Power Input

Pub. No. 49769000
Pub. No. 49769100
Page 4-9, Added to Figure 4-5.

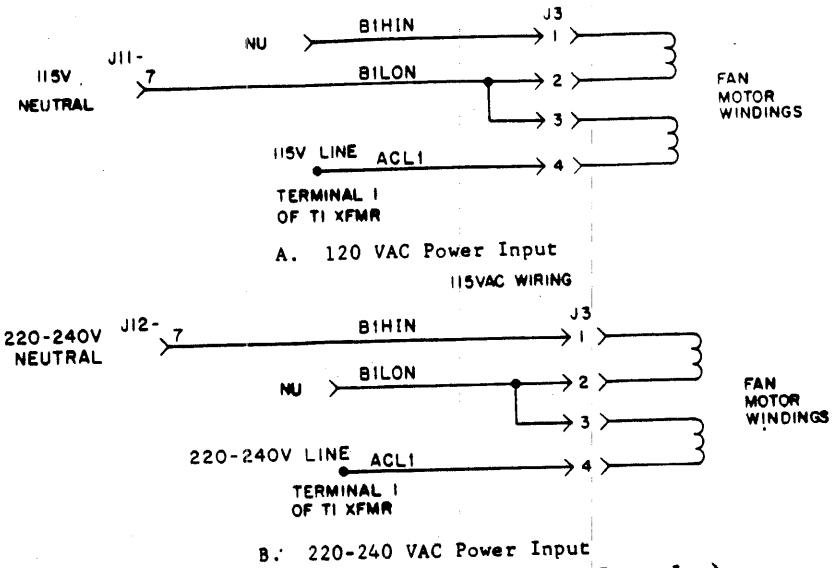

(7702934X Series Power Supply)

Pub. No. 49769000, Page 6-188
Pub. No. 49769100, Page 6-198

Added figure to Power Supply Removal/Replacement procedure.

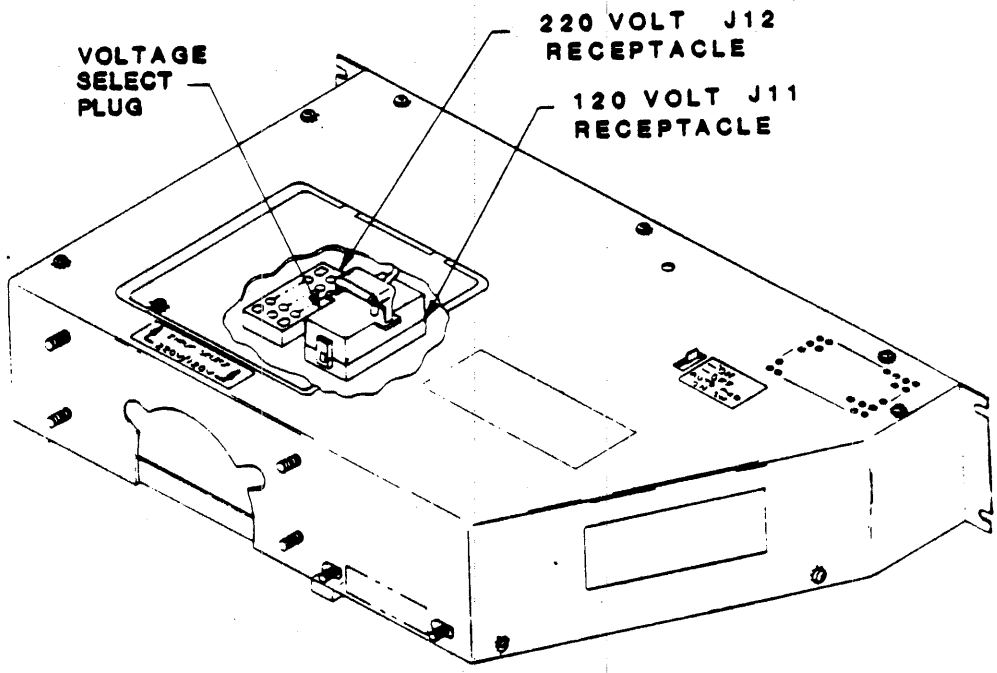

Figure 6-27B. Voltage Select Plug (7702934X Series Power Supply)

Pub. No. 49769000, Page 7-17
Pub. No. 49769100, Page 7-11

Added to Parts List.

-1	*	77029341	• POWER SUPPLY ASSEMBLY, 60 HZ
-1	*	77029342	• POWER SUPPLY ASSEMBLY, 50 HZ

COMMENT SHEET

MANUAL TITLE _____

_____

PUBLICATION NO. _____ REVISION _____

FROM: NAME: _____

BUSINESS ADDRESS: _____

COMMENTS:

This form is not intended to be used as an order blank. Your evaluation of this manual will be welcomed by Computer Peripherals Incorporated. Any errors, suggested additions or deletions, or general comments may be made below. Please include page number references and fill in publication revision level as shown by the last entry on the Record of Revision page at the front of the manual. Customer engineers are urged to use the TAR.

CUT ALONG LINE

NO POSTAGE STAMP NECESSARY IF MAILED IN U. S. A.

FOLD

FOLD

19403-9990

NO POSTAGE
NECESSARY
IF MAILED
IN THE
UNITED STATES

BUSINESS REPLY MAIL

FIRST CLASS PERMIT NO. 32 NORRISTOWN, PA

POSTAGE WILL BE PAID BY

COMPUTER PERIPHERALS, INC.
2621 VAN BUREN AVENUE
NORRISTOWN, PENNSYLVANIA 19403

ATTN: TECHNICAL PUBLICATIONS DEPT.

LONG LINE

FOLD

FOLD

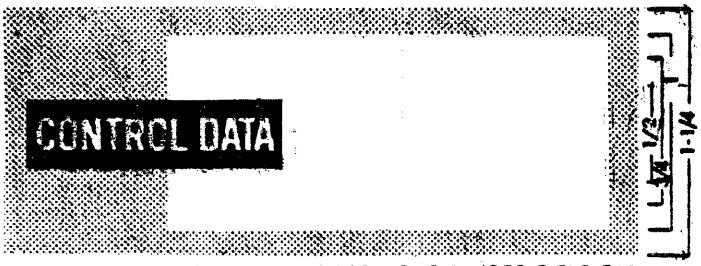

>>> CUT OUT FOR USE AS LOOSE-LEAF BINDER TITLE TAB

CONTROL DATA CORPORATION

2801 VAN BUREN AVENUE, NORRISTOWN, PENNSYLVANIA 19401

PRINTED IN U.S.A.