CONTROL DATA®
MULTIPLE DISK DRIVE

BM101-A/B
BM103-A/B

THEORY OF OPERATION
DIAGRAMS
MAINTENANCE AIDS
WIRE LISTS

CONTROL DATA
CORPORATION

CUSTOMER ENGINEERING MANUAL

REVISION RECORD

REVISION	DESCRIPTION
01	Preliminary Edition.
(9-1-69)	
A	Manual released.
(1-1-70)	
B	Engineering Change Order PE21171 incorporating the following:
(5-15-70)	FCO PE11090/ECO PE11090 affecting pages 4-21, 4-23, 9-5 thru 9-96.
	FCO PE11099/ECO PE11099 affecting pages v, vi, vii, 5-26, 7-30, 7-31, 7-42, 7-42.1, 7-43, 9-5 thru 9-96.
	FCO PE11118A/ECO PE11118A affecting pages v, 4-30, 9-5 thru 9-96.
	ECO PE11148A affecting pages 9-5 thru 9-96.
	ECO PE11148B affecting pages 5-25, 5-26.
	FCO PE11195/ECO PE11195 affecting pages 5-18, 5-23, 5-42, 9-5 thru 9-96.
	FCO PE11286/ECO PE11286 affecting pages 5-17, 5-18, 5-23.
	FCO PE11290/ECO PE11290B affecting pages 5-16, 5-17, 5-21, 5-24.
	ECO PE11332 affecting pages 5-17, 9-5 thru 9-96.
	FCO PE11426/FCO PE11427/ECO PE21036 affecting pages 5-23, 5-37.
	FCO PE11446/ECO PE11446 affecting pages 9-5 thru 9-96.
	ECO PE11451 affecting pages 9-5 thru 9-96.
	ECO PE11451A affecting pages 9-5 thru 9-96.
	FCO PE11492/ECO PE11446 affecting pages 5-15, 9-5 thru 9-96.
	FCO PE21475/FCO PE21476/ECO PE21047 affecting pages 5-23, 5-41, 9-5 thru 9-96.
	FCO PE21103/ECO PE21103 affecting pages 5-19, 5-20, 5-23, 5-36.
	FCO PE21122/ECO PE21122 affecting pages 5-28.
	ECO PE21168 affecting page 5-15.
	ECO PE21269 affecting pages 9-5 thru 9-96.
	Editorial Changes affecting pages 5-2, 5-26.1, 5-26.2, 5-26.3, 5-26.4, 5-26.5.
C	Engineering Change Order PE21585 incorporating the following:
(9-28-70)	ECO PE21296 affecting pages vii, 9-50, thru 9-50.11.
	ECO PE21362 affecting pages vii, 9-26.1 thru 9-26.21, 9-66, 9-67.
	ECO PE21537 affecting pages 9-82, 9-85, 9-87, 9-88, 9-91, 9-92, 9-94.
	Editorial Changes affecting pages 5-1, 5-2, 9-50.12.
D	Engineering Change Order PE21295 incorporating the following:
(1-4-71)	ECO PE21253 affecting pages 9-26.1 thru 9-26.22, 9-50.1, 9-50.2.
	FCO PE21367/ECO PE21367 affecting pages 5-18, 5-23, 5-42.
	ECO PE21504 affecting pages 5-19, 5-21, 5-23.
	ECO PE21572 affecting page 5-41.
	ECO PE21594 affecting pages 9-50.11.
Publication No. 41249000	

© 1969, 1970, 1971
by Control Data Corporation
Printed in the United States of America

Address comments concerning this manual to:

Control Data Corporation
Technical Publications Department
4201 North Lexington Avenue
St. Paul, Minnesota 55112

or use Comment Sheet in the back of this manual.

REVISION RECORD (CONT'D)

REVISION	DESCRIPTION
	FCO PE21647/ECO PE21647 affecting pages 5-17, 5-20, 7-49, 9-26. 1 thru 9-26. 22.
	FCO PE21803/ECO PE21647B affecting pages 5-17, 9-26. 1 thru 9-26. 22.
	ECO PE21665 affecting pages 9-82.
	ECO PE21667 affecting pages 9-82 thru 9-95.
	FCO PE21717/ECO PE21717 affecting pages 5-26. 1, 9-82 thru 9-95.
	Editorial changes affecting page 9-96.
E	Engineering Change Order PE24097 incorporating the following: Engineering Change Orders:
(3-18-71)	PE21421, PE21886, PE21933B affecting pages 4-23, 5-24. 1, 5-24. 2, 5-26. 4 thru 5-26. 8, 9-66,
	9-67, 9-96 thru 9-109. Editorial Changes affecting pages v, vii, 5-23, 5-29, 5-30, 9-110.
F	Engineering Change Order PE24285 incorporating the following,
(9-20-71)	Engineering Change Orders; PE24130, PE24155D, PE24159. Field Change Orders; PE24028,
	PE24155A, PE24156A, PE24157, affecting pages; v, vii, 5-20, 5-24, 5-24. 1, 5-26. 7 thru
	5-26. 12, 9-110 thru 9-125.
G	Engineering Change Order PE24344 incorporating the following: Engineering Change Orders;
(11-18-71)	PE21717A, PE21933B. Editorial changes. Affecting pages : vii, 4-7, 4-14. 1, 4-14. 2, 4-15, 4-16,
	4-16. 1, 4-16. 2, 4-17, 4-18, 4-19, 4-26, 5-5, 5-12, Comment Sheet.
H	Update manual to incorporate Engineering Change Orders PE24392, PE24402, PE24429. This
(3-13-72)	update affects pages 5-22, 5-25, 9-9, 9-14, Comment Sheet.
J	Update manual to incorporate Engineering Change Order PE24213A. This update affects pages vii,
(6-30-72)	ix, 5-16, 5-17, 5-20, 5-22, 5-23. The following pages are added; 5-51, 7-79, 7-80, 7-81, 7-82,
	9-26.23 thru 9-26.49 and 9-50.12 thru 9-50.25.

PREFACE

All available customer engineering installation, operation, and maintenance information for the CONTROL DATA BM101 and BM103 Multiple Disk Drive is in three manuals:

Publication No. 41248900	General Description, Operation, Installation and Checkout, Maintenance
Publication No. 41249000	Theory of Operation, Diagrams, Maintenance Aids, Wire List
Publication No. 41243700	Illustrated Parts List

CONTENTS

4. THEORY OF OPERATION

Functions 4-1
- First Seek 4-1
- Direct (Forward/Reverse)Seek 4-10
- Return to Zero Seek (RTZS) 4-12
- Read/Write/Erase 4-13

Assemblies 4-14
- Power Supply 4-14
  - AC/DC Distribution 4-14
  - Power-On Sequence 4-16
  - Power-Off Sequence 4-18
- Logic Chassis 4-20
- Deck Assembly 4-20
  - Drive Motor Assembly 4-21
  - Spindle Assembly 4-21
  - Hydraulic Pump 4-23
  - Carriage & Carriage Mount 4-24
  - Transducers 4-29
  - Disk Cleaner Assembly 4-33
  - Hydraulic Actuator 4-34
  - Hydraulic Operations 4-36
- Frame 4-48
  - Blower System 4-48
  - Filter Box 4-48

Disk Pack 4-50

5. DIAGRAMS

Introduction 5-1

Key to Logic Symbols 5-14

Input/Output Transmitters and Receivers 5-15

Address Register and Control Bus Steering 5-16

Select and Reserve 5-17

Latency Overlap 5-18

Difference Counter 5-19

Access Control 5-20

Head Selection and Fault Detection 5-21

Head Gating and Read/Write 5-22

Chassis Map 5-23

Signal Distribution
- MODS A04, B04 & below 5-24
- MODS A05, B05 5-24.1
- MODS A06, B06 & above 5-24.2

Power Supply
- MODS A03, B03 & below 5-25
- MODS A04, A05 5-26.1
- MODS A06, & above 5-26.4
- MODS B04 & above 5-26.7

Control Panel 5-26.11

Schematic Diagrams
- Sector Preamp 5-27
- Cylinder Preamp 5-28
- Detent Preamp 5-29
- 8AFN Head Select Preamp 5-30
- 8AHN Head Selection 5-31
- 8AJN Upper Difference Counter 5-32
- 8AKN Address Register 5-33
- 9ALN Latency Counter 5-34
- AANN Steering Unit Logic 5-35
- DAPN Seek Error, On Cylinder, and XDCR Amps 5-36
- 8AQN/0AQN Solenoid Control Control 5-37
- 8ARN Receiver 5-38
- BASN RTZS and Fault Detection 5-39
- 8ATN Line Transmitter 5-40
- BAUN Read Recovery 5-41
- 9AVN Sector Register 5-42
- 8AWN Lower Difference Counter 5-43
- 9AYN Write Erase Circuits 5-44
- 8AZN Terminator 5-45
- 8FAN Analog Gate and Amplifier 5-46

8FBN Select and Reserve 5-47
AFEN Speed Detector and Miscellaneous 5-48
8FFN Tester Card 5-49
BFGN Fault Status 5-50
9DMN Read/Write Test Card 5-51

7. MAINTENANCE AIDS

General 7-1
SPL Logic 7-1
Physical Description 7-1
Pin Assignment 7-2
Test Points 7-3
Use of Relative Level Indicators 7-3
AND Function 7-3
OR Function 7-4
Information Contained within Logic Symbols 7-4
Discrete Component Circuits 7-4
Intebrid Circuits 7-7
Wired Functions 7-8
Standard/Non-Standard Logic Level Indicator 7-9
Intebrid Circuit Descriptions 7-9
Discrete Component Circuit Descriptions 7-9
Low Level Amplifier - FAB 7-10
Gated Intermediate Level Amplifier - GJA 7-12
High Level Amplifier - HAA 7-13
High Level Amplifier - HAB 7-13
High Level Amplifier - HJA 7-13
Lamp Driver - IAA 7-17
Lamp Driver - IBA 7-18
Lamp Driver - ICA 7-18
Low Speed Driver - IDA 7-20
Write Driver - JAB 7-22
Erase Driver - JBB 7-24
Line Transmitter - LAA 7-24
Oscillator - MAA 7-27
Waveform Generator - MBA 7-29
Adjustable Waveform Generator - MBC 7-30
Quantizing Detector - QAA 7-30
Quantizing Detector - QBA 7-33
Quantizing Detector - QCA 7-33
Speed Detector - QDA 7-35
Or - QEA 7-37
Quantizing Detector - QFA 7-39
Quantizing Detector - QFB 7-39
Quantizing Detector - QFF 7-42
Line Receiver - RAA 7-42.1
Line Receiver - RBA 7-45
Switch Receiver - RDA 7-45
Switch Receiver - RCA 7-47
Line Receiver - RFA 7-47
Delay - UA-, UBA 7-48
Delay Circuit - UCA 7-50
Delay Circuit - UCB 7-50
Delay Circuit - UCC 7-50
Delay Circuit - UCD 7-50
Delay Circuit - UCE 7-50
Delay - UDA 7-52
Delay - UDB 7-52
Unidirectional Time Delay - UEA 7-54
And - VAA 7-55
And - VAB 7-56
And/Or (Single Input) - VAC, VJW 7-56
Power Driver - VJK 7-59
Power Driver - VJL 7-60
And - VJM 7-61
Or - VJN 7-62
And - VJP 7-63

Power Driver - VJR 7-64
Or - VJS 7-65
Or - VJT 7-65
And - VJU, VJV 7-66
And/Or - VJW 7-66
Flip-Flop - WBB 7-66
Toggle Flip-Flop - WBC 7-69
Pulse Shaper - XAA 7-70
Pulse Shaper - XAB 7-72
Pulse Shaper - XAC 7-72
Head and Disk Pack Replacement Criteria 7-75
Head Replacement Criteria 7-75
Disk Pack Replacement Criteria 7-75
Disk Pack Runout Check 7-76
Tester Card 7-77
Read/Write Tester Card 7-79

9. WIRE LISTS

Description of Wire Lists 9-1
Logic Wire List 9-1
Non-Logic Lists 9-1
Logic Wire List
MODS 04 & below 9-5
MODS 05 thru 13 9-26.1
MODS 14 & above 9-26.23
Logic Chassis Harness Assy
MODS 03 & below 9-27
MODS 04, 05 9-38
MODS 06 thru 13 9-50
MODS 14 & above 9-50.12
Deck Assy
MODS A01, B01 9-50.25
MODS A02, B02 & above 9-55
1X Final Assy 9-62
2X Final Assy 9-63
Control Panel
MODS A03, B03 & below 9-65
MODS A04, B04 & above 9-66
Filter Box Assy 9-68
Power Supply Assy
MODS A03, B05 & below 9-69
MODS A04, A05 9-82
MODS A06 & above 9-96
MODS B04 & above 9-110
Maintenance Panel Assy 9-125

FIGURES

4-1 Input/Output Signal Gating - 2X Cabinet 4-2
4-2 Select and Reserve Sequence 4-3
4-3 Block Diagram - 2X Cabinet 4-4
4-4 Power Supply - AC/DC Distribution (Series Code 05 And Below) 4-14.1
4-4.1 Power Supply - AC/DC Distribution (Series Code 06 And Above) 4-15
4-5 Power Supply - Sequencing (Upper Deck Only) (Series Code 05 And Below) 4-16.1
4-5.1 Power Supply - Sequencing (Upper Deck Only) (Series Code 06 And Above) 4-16.2
4-6 Deck Assembly 4-22
4-7 Spindle Assembly 4-23
4-8 Carriage/Carriage Mount 4-25
4-9 Head Loading Mechanism 4-27
4-10 Head/Arm Assembly Motion 4-29
4-11 Transducer 4-30
4-12 Detent Detection 4-31
4-13 Cylinder Detection 4-31
4-14 Cylinder Position Detection 4-32
4-15 Index/Sector Detection 4-33
4-16 Hydraulic Actuator - Power Off 4-35
4-17 Hydraulic Actuator - Hydraulic Home 4-38
4-18 Hydraulic Actuator - Detent 4-40
4-19 Hydraulic Actuator - Forward Fast 4-41

4-20 Hydraulic Actuator - Forward Intermediate 4-43
4-21 Hydraulic Actuator - Forward Slow 4-44
4-22 Hydraulic Actuator - Reverse Fast 4-45
4-23 Hydraulic Actuator - Reverse Intermediate 4-46
4-24 Hydraulic Actuator - Reverse Slow 4-47
4-25 Blower System 4-49
5-1 Power On/First Seek Sequence 5-2
5-2 Power On/First Seek Timing 5-3
5-3 Deck or System Power Off Sequence 5-4
5-4 Power Off Timing 5-5
5-5 System Power Sequence Lines 5-6
5-6 Direct Seek Sequence 5-7
5-7 Direct Seek Timing 5-8
5-8 Return to Zero Seek Sequence 5-9
5-9 Return to Zero Seek Timing 5-10
5-10 Latency Overlap Timing 5-11
5-11 Typical Sector Format Read/Write Timing 5-12
5-12 Ground Scheme 5-13
7-1 SPL Card 7-2
7-2 AND Function 7-3
7-3 OR Function 7-4
7-4 Truth Table 7-5
7-5 Discrete Component Circuit 7-6
7-6 Intebrid Circuit 7-7
7-7 Wired Functions 7-8
7-8 Low Level Amplifier - FAB 7-11
7-9 Gated Intermediate Level Amplifier - GJA 7-12
7-10 High Level Amplifier - HAA 7-14
7-11 High Level Amplifier - HAB 7-15
7-12 High Level Amplifier - HJA 7-16
7-13 Lamp Driver - IAA 7-17
7-14 Lamp Driver - IBA, ICA 7-19
7-15 Low Speed Driver - IDA 7-21
7-16 Write Driver - JAB 7-23
7-17 Erase Driver - JBB 7-25
7-18 Line Transmitter - LAA 7-26
7-19 Oscillator - MAA 7-28
7-20 Waveform Generator - MBA 7-29
7-21 Adjustable Waveform Generator - MBC 7-31
7-22 Quantizing Detector - QAA, QBA 7-32
7-23 Quantizing Detector - QCA 7-34
7-24 Speed Detector - QDA 7-36
7-25 On - QEA 7-38
7-26 Quantizing Detector - QFA 7-40
7-27 Quantizing Detector - QFB 7-41
7-28 Quantizing Detector - QFF 7-43
7-29 Line Receiver - RAA, RBA 7-44
7-30 Switch Receiver - RDA, RCA 7-46
7-31 Line Receiver - RFA 7-48
7-32 Delay - UA-, UBA 7-49
7-33 Delay Circuit - UCA, UCB UCC, UCD, UCE 7-51
7-34 Delay - UDA, UDB 7-53
7-35 Unidirectional Time Delay - UEA 7-54
7-36 And - VAA 7-55
7-37 And - VAB 7-57
7-38 And/Or (Single Input) - VAC, VJW 7-58
7-39 Power Driver - VJK, VJS 7-59
7-40 Power Driver - VJL 7-60
7-41 And - VJM 7-61
7-42 Or - VJN 7-62
7-43 And - VJP 7-63
7-44 Power Drive - VJB 7-64
7-45 Or - VJT 7-65

7-46 And - VJU, VJV 7-67
7-47 Flip-Flop - WBB 7-68
7-48 Toggle Flip-Flop - WBC 7-69
7-49 Pulse Shaper - XAA 7-71
7-50 Pulse Shaper - XAB 7-73
7-51 Pulse Shaper - XAC 7-74
7-52 Disk Pack Runout Check 7-77
7-53 Logical Presentation of Tester Card 7-78
7-54 Logical Presentation of Read/Write Tester Card 7-80
7-55 Read Data Trace 7-82

TABLES

4-1 Input/Output Lines 4-5

Information for these sections is included in BM101 and BM103 Multiple Disk Drive Pub. No. 41248900

SECTION 1

GENERAL DESCRIPTION

SECTION 2

OPERATION

SECTION 3

INSTALLATION AND CHECKOUT

SECTION 4

THEORY OF OPERATION

THEORY OF OPERATION

Theory of operation for the MDD is divided into three parts. The first part considers the MDD in terms of the functions it performs and the signals exchanged with the controller. The second part relates the major assemblies of the MDD to the previously discussed functions. The last part deals with the disk pack which is physically not a part of the MDD, but figures functionally in all MDD operations.

FUNCTIONS

Overall capabilities of the MDD are best described by examining the functional blocks of activity performed by a deck of the MDD. The functions are as follows:

First Seek

Direct (Forward or Reverse) Seek

Return to Zero Seek (RTZS)

Read/Write/Erase

Each of these functions is further described by flow charts and timing diagrams in Section 5 of this manual.

The above functions are performed by each deck of the MDD. Normal operation is such that a controller will generally be directing the functional activities of more than one deck. Figure 4-1 shows the method of selecting and gating input/output data to a particular deck. Figure 4-2 details the sequence of events that establishes the link and gating. The signals that are then exchanged are described in Table 4-1 and are shown relative to a point of origin on Figure 4-3.

FIRST SEEK

This function involves the activities that a deck must perform before it can effectively respond to a read, a write, or a seek command from the controller. This function consists mainly of power supply relay sequencing and status checking by the deck logic.

As a result, no actual selection of the deck is required and very little MDD/controller signal exchange occurs. Successful progression of the function assumes that power supply circuit breakers for the deck are on, power supply DC/OFF switch for the deck is set to DC, power supply fuses are operational, related filter box panel UNIT POWER circuit breaker is on, START indicators for deck are lighted, disk pack is installed on spindle of deck, and the sector sensor is engaging the disk pack sector disk.

Initiation of the function occurs when the controller makes sequence power available to the power supply for the deck. Sequence power causes the power supply relay K01 (K101 for lower deck) to energize and the power supply performs a Power-On sequence (refer to Power Supply under Assemblies in this section for a detailed description).

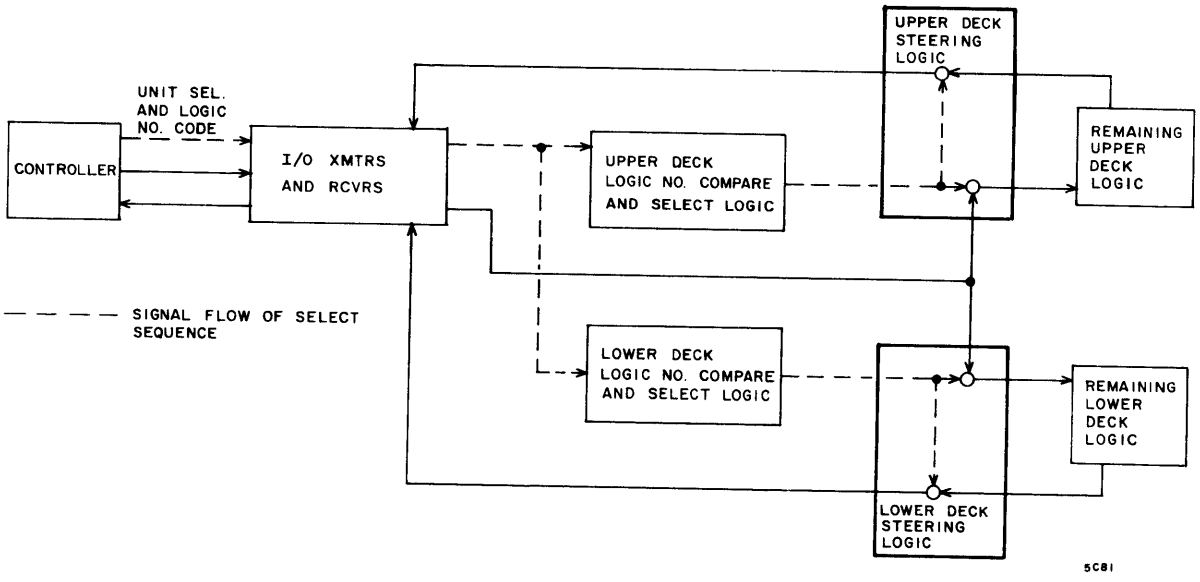

Figure 4-1. Input/Output Signal Gating - 2X Cabinet

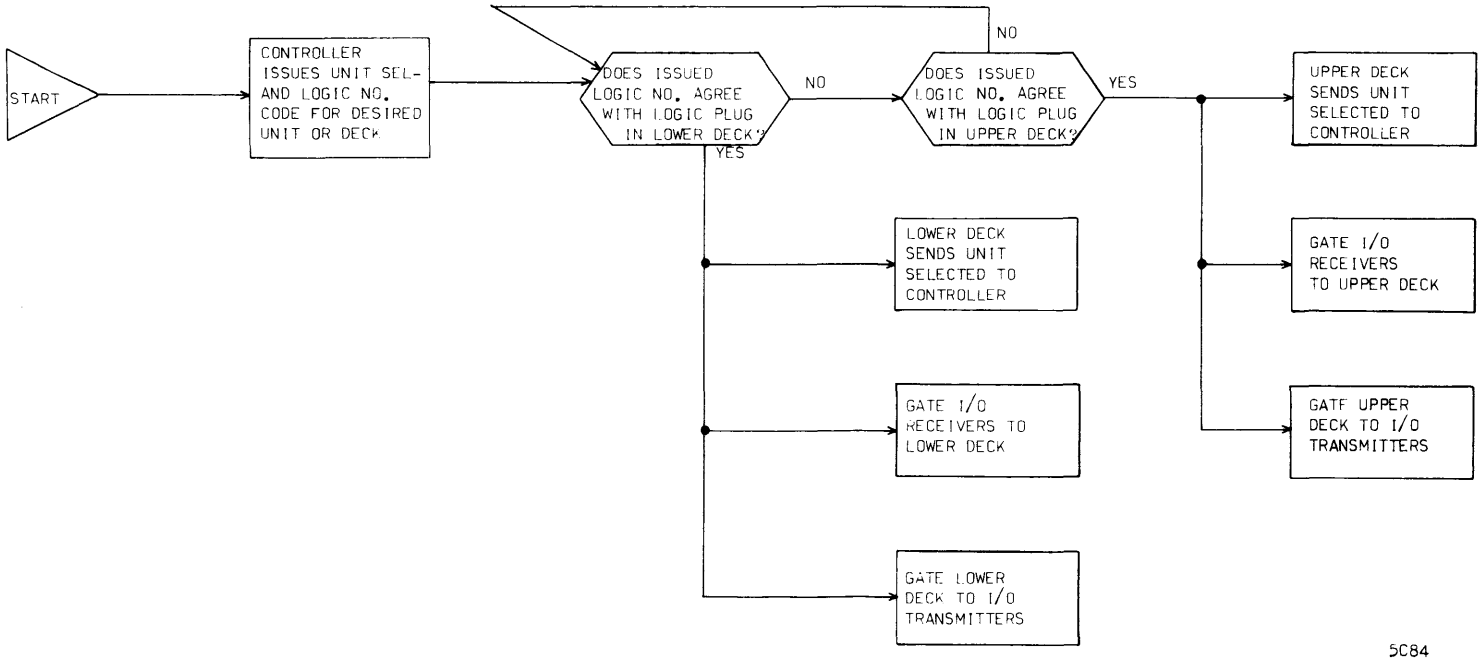

Figure 4-2. Select and Reserve Sequence

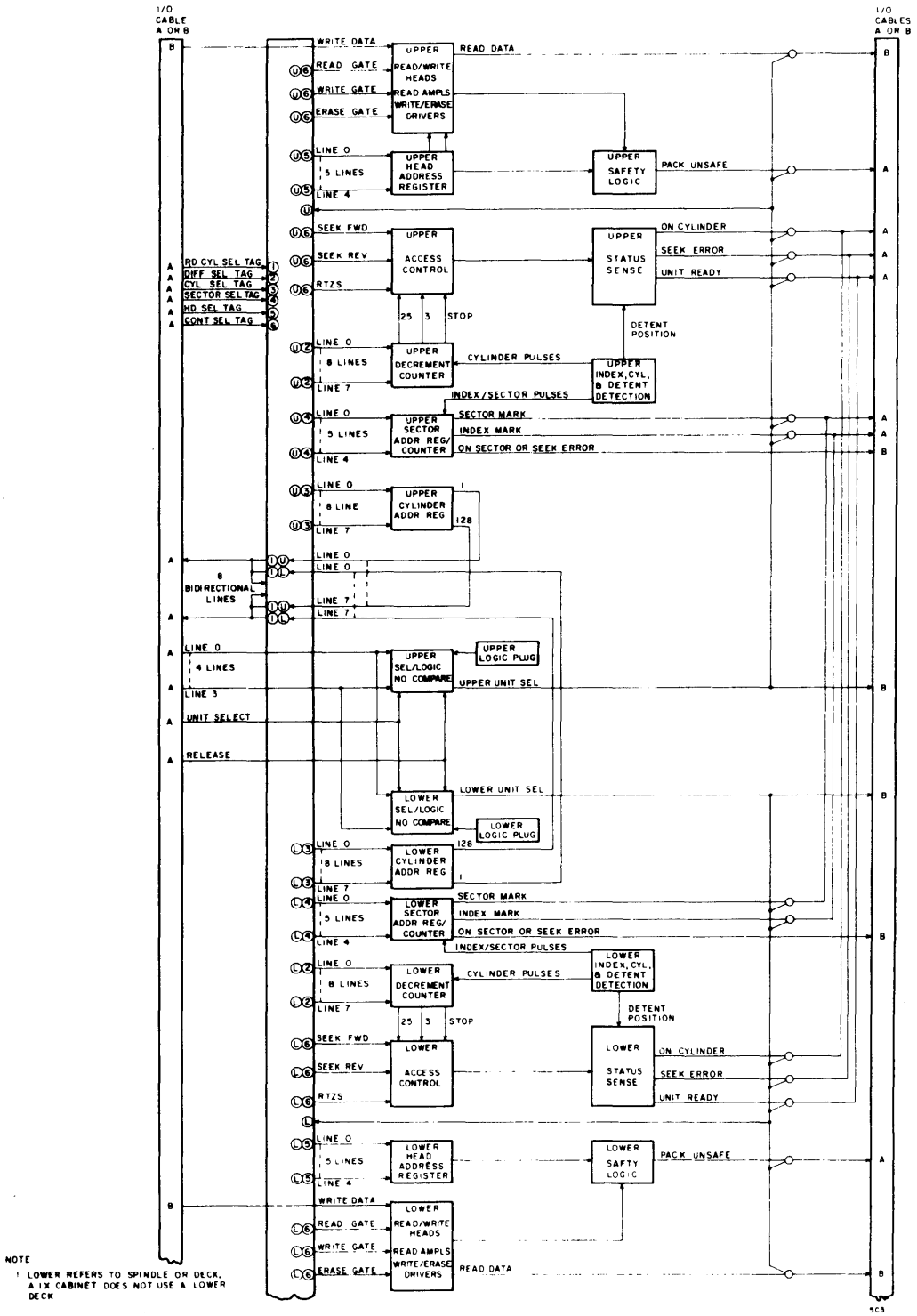

Figure 4-3. Block Diagram - 2X Cabinet

TABLE 4-1. INPUT/OUTPUT LINES

SIGNAL	FUNCTION
Bidirectional Lines Address and Control	Information carried by the bidirectional lines is coupled by six select (tag) signals. The influencing tag signal must be known before information on a bidirectional line can be interpreted. The six tag signals are defined below under Input Lines. The information coupled by each tag signal is as follows:

Address/ Control bus	Read Cylinder Select, Difference Select, or Cylinder Select	Sector Select	Head Select	Control Select
Bit 0	1	1	1	Write Gate - A "1" input on this line enables the write drivers.
Bit 1	2	2	2	Read Gate - A "1" input on this line enables the digital read data line.
Bit 2	4	4	4	Seek Forward - A "1" input on this line initiates forward carriage movement.
Bit 3	8	8	8	Not Used
Bit 4	16	16	16	Erase Gate - A "1" input on this line enables the erase driver to pass current through the head erase coil.
Bit 5	32	Not Used	Not Used	Seek Reverse - A "1" input on this line initiates reverse carriage movement.

TABLE 4-1. INPUT/OUTPUT LINES (Cont'd)

SIGNAL		FUNCTION		
Address/ Control bus	Read Cylinder Select, Difference Select, or Cylinder Select	Sector Select	Head Select	Control Select
Bit 6	64	Not Used	Not Used	Return to Zero - A "1" input on this line initiates carriage movement to cylinder 00.
Bit 7	128	Not Used	Not Used	Not Used

Input Lines	
Read Cylinder Select	A "1" input on this line enables the address and control lines transmitter of the selected deck. Information transmitted to the control unit through these lines is the current cylinder address.
Difference Select	A "1" input on this line indicates that the address and control lines contain the difference address from the control unit. This address is the difference between the control unit's current cylinder request and the selected deck's present cylinder location.
Cylinder Select	A "1" input on this line indicates that the address and control lines contain the control unit's current cylinder request.
Sector Select	A "1" input on this line enables the address and control lines to couple the sector information to the selected deck.
Head Select	A "1" input on this line indicates that the address and control lines contain the head select information.

TABLE 4-1. INPUT/OUTPUT LINES (Cont'd)

SIGNAL	FUNCTION
Control Select	A "1" input on this line indicates that the address and control lines contain control information.
*Unit Select	This signal is preceded by a Logic Number transmission. A "1" input on this line initiates the select sequence (assuming the unit is ready) in the unit whose logic number corresponds to the number currently on the four Logic Number lines. If the unit is ready, it returns a Unit Ready and a Unit Selected signal. If not ready, the unit returns a "O" on the Unit Ready line.
*Logic Number lines (4)	A transmission on these lines is accompanied by a Unit Select signal. The unit with the logic number corresponding to the digital number transmitted on these four lines initiates a select sequence (assuming the unit is ready and available) when the Unit Select signal is transmitted. If the unit is ready and available, it returns a Unit Ready and a Unit Selected signal. If not ready, the unit returns a "0" on the Unit Ready line.
Release	A "1" input on this line clears the Reserve and Compare Enable flip-flops in the selected unit.
Write Data	Carries information to be written from the control unit to the selected deck.
Output Lines	
Read Data	Carries digital information read from a disk to the control unit.

TABLE 4-1. INPUT/OUTPUT LINES (Cont'd)

SIGNAL	FUNCTION
On Cylinder	Indicates that the positioning mechanism of the selected deck has stopped and the read/write heads have reached the addressed cylinder.
Sector Mark	Carries sector reference marks from the selected disk pack to the control unit.
Seek Error	A "1" output indicates that the selected deck was unable to complete a seek operation to the point of an On Cylinder signal to the control unit. A Return to Zero command sent to the unit indicating a seek error clears the Seek Error condition, returns the heads to cylinder 00, and enables an On Cylinder signal to be sent to the control unit.
Unit Selected	This signal is a response to the receipt of a Unit Select and a Logic Number signal combination. A "1" output indicates that the unit is available. A "0" signal indicates that the unit is not ready (see Unit Ready signal). The control unit checks that a Unit Selected signal is not received from more than one unit at a time.
Index	Provides a track reference mark from the selected deck to the control unit. This mark occurs once for each revolution of the disk pack.
Pack Unsafe	A "1" output indicates that the selected deck has one or more fault conditions. Write and erase currents are inhibited by the presence of any of the conditions. The conditions include: 1. More than one head selected. 2. Read and write gates up at the same time.

TABLE 4-1. INPUT/OUTPUT LINES (Cont'd)

SIGNAL	FUNCTION
Pack Unsafe (Cont'd)	3. Read and erase gates up at the same time. 4. Erase and no write driver on. 5. Erase and both write drivers on. 6. One or both write drivers on and no erase driver on. 7. Read, write, or erase gate on and not On Cylinder. 8. Low voltage situation that could cause a loss in control of write and erase currents.
*Unit Ready	This signal is a response to the receipt of a Unit Select and a Logic Number signal combination. A "1" output is present if both of the following conditions are satisfied: 1. Disk pack installed, spindle motor up to speed, heads loaded. 2. Related Logic Chassis Maintenance panel ON LINE/OFF LINE switch set to ON LINE.
*On Sector or Seek Error	Indicates that the unit has completed (On Sector) or is unable to complete (Seek Error) the previously addressed seek. This is an interupt line transmitted with or without the unit being selected. On Sector is gated by the Compare Enable flip-flop and the On Cylinder signal. On Sector signal is a static "1" for duration of sector preceding addressed sector and a static "1" level for a Seek Error. The pulses occur once per revolution of the disk pack until a Selected Read Gate or a Release is received.

* This signal is not gated by the Unit Selected signal.

Power is applied to the brush and spindle drive motors during the Power-On sequence. Application of power to the brush motor starts a 60-second (approximately) disk cleaning cycle. When the disk pack speed reaches 2000 rpm, the power supply relay K05 (K105 for lower deck) energizes to provide sequence power to the next deck. Actuator solenoid power also becomes available, causing the detent pawl to disengage and the actuator to access forward at 2 ips to the hydraulic home position.

Transfer of the brush switch contacts at the end of the brush cycle sets the Forward Latch (FF). This causes the actuator to perform a forward fast access that mechanically loads and latches the read/write heads. The transferring contacts of the heads loaded switch sets the RTZS FF which clears the Forward Latch. The actuator responds by performing a reverse fast access to the hydraulic home position. A 300-ms delay (started when the RTZS FF was set) circuit clears the RTZS FF which in turn sets the Forward Latch, Intermediate, and Slow FF's. This causes the actuator to access forward at 2 ips until the logic senses the leading edge of the first track (track 00) pulse. The track pulse sets the Detent FF and releases the detent pawl. The output of the detent transducer is now observed and 5 ms after the pawl engages the detent gear, the deck sends an On Cylinder signal to the controller. (A seek Error signal would have been sent instead if a 600-ms delay, starting when the heads loaded switch transferred, had timed out.) The deck is now ready to perform a Read, a Write, or a seek (Direct or RTZS) operation. Such an operation must be preceded by the selecting sequence covered previously (Figures 4-1 and 4-2).

DIRECT (FORWARD/REVERSE) SEEK

The Direct Seek function involves those operations that must be performed to move the read/write heads from their current track or cylinder location to the one specified by the controller. This function must be preceded by the selecting sequence (Figure 4-1 and 4-2) unless the deck is already selected. Assume that the desired deck just completed a First Seek and is awaiting further instruction at track 00. Assume further that the controller wishes to do a Read or a Write operation at track 88. When the controller determines that the deck is selected and ready, it issues a Cylinder Select signal. This signal gates the content of the deck Cylinder Address register (00) to the controller via the bidirectional lines (content of the register always preset to 00 during

a First Seek or RTZS). The controller then calculates the difference between the decks current and desired location and sends a Difference select that gates the seek length (88 tracks) into the decrement counter of the deck (again via the bidirectional lines). The controller now uses a Cylinder Select and the bidirectional lines to gate the address of the desired cylinder (88) into the deck Cylinder Address register. This is followed by a Sector Select that enters the sector address into the deck Sector Address register. Next the controller sends a Head Select signal that gates the number corresponding to the desired read/write head into the Head register. The last address and control exchange involves the Control Select signal that gates a "1" to the deck on bit 2 (Seek Forward) of the bidirectional lines.

The Seek Forward pulse causes an Any Seek pulse. (A Seek Reverse pulse would also cause the Any Seek, but in addition would have cleared the Forward Latch.) Any Seek transfers the content of rank I of the decrement counter (88) to rank II and clears the Detent FF. The hydraulic actuator responds by applying pressure to the detent pawl. As soon as the detent pawl clears the detent gear, forward motion begins. As each track is crossed, the cylinder transducer generates a track pulse. The trailing edge of each of these pulses decreases the content of the decrement counter by one. Motion velocity is controlled according to the content of the decrement counter, and since this content is in excess of 26, the actuator performs a forward fast access. Fast access (26 ips) continues until the decrement counter content equals 25 tracks remaining. At this time the counter output decoding logic sets the Intermediate FF, and the hydraulic actuator continues the access in the forward intermediate mode (7 ips). When the decrement counter content indicates three tracks to go, the Slow FF sets. This causes the actuator to reduce speed to 2 ips and continue the access at a forward slow rate. When the tracks remaining have been reduced to one, the output of the cylinder transducer detection logic is gated such that the leading edge of the next track pulse sets the Detent FF. This causes the hydraulic actuator to release the spring-loaded pawl. (If this were a Reverse Seek, the Forward Latch would set as a result of the Detent FF setting. Setting the Forward Latch would cause carriage motion to change direction and allow the detent pawl to engage the gear in the same manner as for a Forward Seek.)

Five ms after the detent transducer indicates that the detent pawl has engaged the detent gear, the deck sends an On Cylinder signal to the controller. (If the period during which the pawl was disengaged from the detent gear had exceeded 600 ms, a

Seek Error signal would have replaced the On Cylinder signal.) The deck is now ready to perform a Read, a Write, or a Seek (Direct or RTZS) operation.

RETURN TO ZERO SEEK (RTZS)

The RTZS functions allow a controller to return the read/write heads to track 00 when a Seek Error signal occurs. This function must be preceded by the selecting sequence (Figures 4-1 and 4-2) unless the deck is already selected. The controller responds to a Seek Error signal from a deck by sending a Control Select tag that gates a "1" on bit 6 (RTZS pulse) of the bidirectional lines to the afflicted deck.

The RTZS pulse sets the RTZS FF and causes an Any Seek pulse. The Any Seek pulse clears the Detent FF causing the hydraulic actuator to apply hydraulic pressure to the detent actuator. The pressure overrides the force of the pawl spring and the carriage is free to be moved. The set output of the RTZS FF causes the following events:

Clears decrement counter

Clears Cylinder Address register

Clears Forward Latch

Initiates a 300-ms delay circuit

Establishes a tracks-to-go greater than 26 signal (T>26)

With the Forward Latch cleared and a T>26 situation, the actuator enters into a fast reverse access toward the rear stop (cushioned hydraulically). When the 300-ms delay times out, the RTZS FF clears and the T>26 signal drops. The clear output of the RTZS FF sets the Forward Latch, Intermediate, and Slow FF's. The hydraulic actuator responds to this activity with a slow forward (2 ips) access. As soon as the leading edge of the first track pulse occurs, the Detent FF sets and the actuator removes pressure to the spring-loaded detent pawl. Five ms after the detent transducer indicates that the detent pawl has engaged the detent gear, the deck sends an On Cylinder signal to the controller. (If the period during which the pawl was disengaged from the detent gear had exceeded 600 ms, a Seek Error signal would have replaced the On Cylinder signal.) The deck is now ready to perform a Read, a Write, or a Seek (Direct or RTZS) operation.

READ/WRITE/ERASE

An On Cylinder signal indicates to the controller that the selected MDD deck has completed a seek operation and is awaiting further instruction. If, however, the controller initiated a seek operation in one deck and then in the interim selected another deck, the first deck would make its status known via the On Sector interrupt signal. In the latter case, the controller would be required to precede a Read or a Write operation with the selecting sequence (Figures 4-1 and 4-2). The following paragraphs cover the sequence of events involved in a Read or a Write operation.

A Write operation actually begins before the hydraulic actuator positions the heads to the desired track; the controller Sector Select tag gates the address of the desired sector into the Sector Address register and the Head Select tag gates the identifying number of the head to be used into the Head Address register. When the On Cylinder signal occurs (received by the controller only if deck is selected), the compare logic in the Latency Overlap section of the logic is enabled. This logic compares the static content of the Sector Address register with the cycling content of the sector counter (accumulates sector transducer pulse count, recycling to zero once each revolution. Content of counter exceeds, by one, the number of the last sector pulse to pass; leading edge of sector pulse 3 increases counter content to four.). When the contents of the sector counter and the Sector Address register are equal, the deck sends an On Sector interrupt signal. If the controller has selected another deck meanwhile, this deck will continue to send one On Sector pulse during each revolution of the disk pack until such time as it is selected again. In any case, the leading edge of the first Sector Mark (available to controller whenever a deck is selected) following the On Sector pulse causes the controller to respond with a Control Select tag that gates the Read Gate signal (bit 1 of bidirectional lines) to the deck. Read Gate disables the compare logic and enables the read circuit logic to function with the previously selected head. The selected head reads the record to the controller via the Read Data line. (Refer to Section 2 of this manual for detailed information relative to the read/write format.) When the controller is satisfied that the address of the desired record is being read, it drops the Read Gate and enables the Write Gate and Erase Gate (bits 0 and 4 of the bidirectional lines) with the Control Select tag. This disables the read circuit and enables the write circuit, and data from the controller is written via the Write Data line onto the disk pack record. The Erase Gate signal enables erase current to the erase coil during the Write operation to ensure a clear writing surface.

A Read operation is performed in much the same manner as the Write operation. The difference is that the Write Gate and Erase Gate signals are never enabled (Read Gate stays on throughout the entire record).

ASSEMBLIES

POWER SUPPLY

Each MDD cabinet has a self-contained power supply accessible via the rear door and located behind the swingout logic chassis. The power supply provides a fixed output voltage of +40Y volts for use by the solenoids on the deck assemblies. It also provides adjustable output voltages of +40 vdc (to read/write logic), ±20 vdc (to logic), and +6 vdc (to logic). Each voltage is duplicated within the power supply, so that the voltage can be distributed separately to the upper deck and the lower deck or to row A and row B of the logic chassis.

Basic on/off power control and monitoring is provided at the front panel of the assembly. The front panel is hinged so that access can be gained to adjust or perform maintenance. The assembly is cooled by fans located on the top surface of the chassis.

AD/DC Distribution (Figure 4-4)

Input power is applied through the closed contacts of the MAIN POWER circuit breaker (on filter box panel) to the primary of transformer T01. The presence of the primary input power at the power supply is indicated by the power supply MAIN BREAKER indicator.

The input power is applied directly to the cooling fans in the power supply and the logic chassis. Input power will also be applied to the blower in the lower part of the cabinet, but only when the power supply BLOWER circuit breaker is set to ON. All other distribution of ac power is delayed until during the power-on sequence (described in a later paragraph).

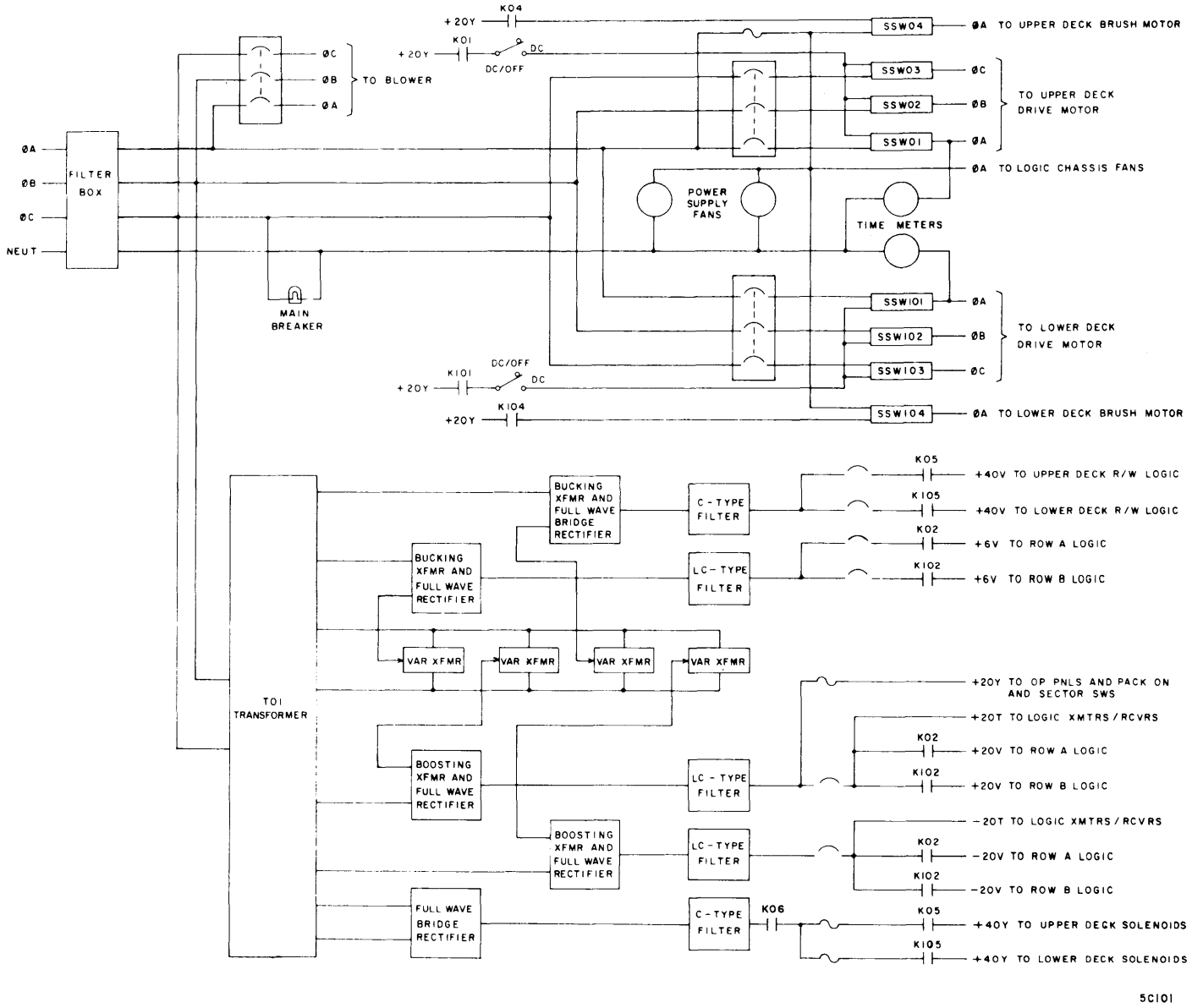

Figure 4-4. Power Supply - AC/DC Distribution
Series Code 05 And Below

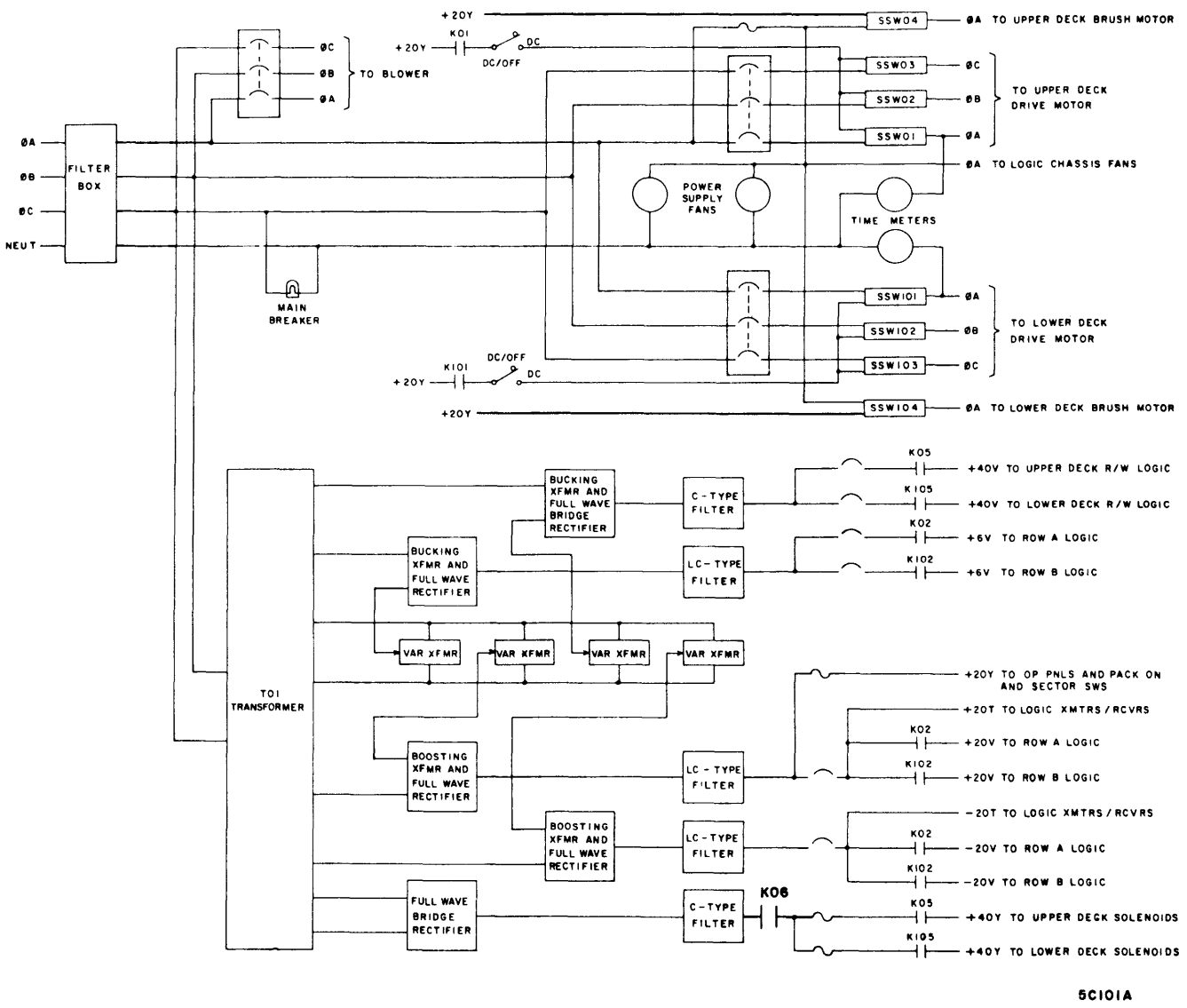

Figure 4-4.1. Power Supply - AC/DC Distribution
Series Code 06 And Above

The dc power distribution begins with the application of main input power to the primary of T01. Voltages developed across the secondary windings are applied to five rectifier/filter circuits. Each of these circuits develops a separate dc voltage. Through the use of variable transformers, four of the five voltages are adjustable (+40Y solenoid power is not adjustable). The +20Y voltage is immediately available when T01 is energized. This voltage is distributed to the operator panels and the pack on and sector in-place switches. The voltage is required to determine the status of these elements during a power on sequence. Distribution of the other dc voltages is controlled by circuit breakers and/or relay contacts.

Power-On Sequence

Power application to a deck is sequenced up by relays in the power supply (Figure 4-5). Sequencing is required to prevent damage to read/write heads and/or disk packs.

A normal on line, power-on sequence begins when switch S501 on the operator panel is pressed (actuating power supply panel START switch will also start the sequence). The progression of the sequence assumes that all power supply circuit breakers are on, that all power supply fuses are operational, that the power supply DC/OFF switch is set to DC, that a disk pack is installed, that the deck drawer is closed, and that sequence voltage to relay K01 is available.

NOTE

Although steps 1 through 3 occur prior to actuating S501, they should be considered a part of the power on sequence.

1. When filter box MAIN POWER circuit breaker was set to ON, +20Y voltage became available, and K06 was energized, (Figure 4-4).
2. When controller issued sequence voltage, K01 energized via pick line (Figure 4-5). The +20Y voltage was applied to solid-state switches SSW01, SSW02, and SSW03 (Figure 4-4). This enabled the solid-state switches to conduct their respective phase of ac power. The upper deck drive motor and time meter started.

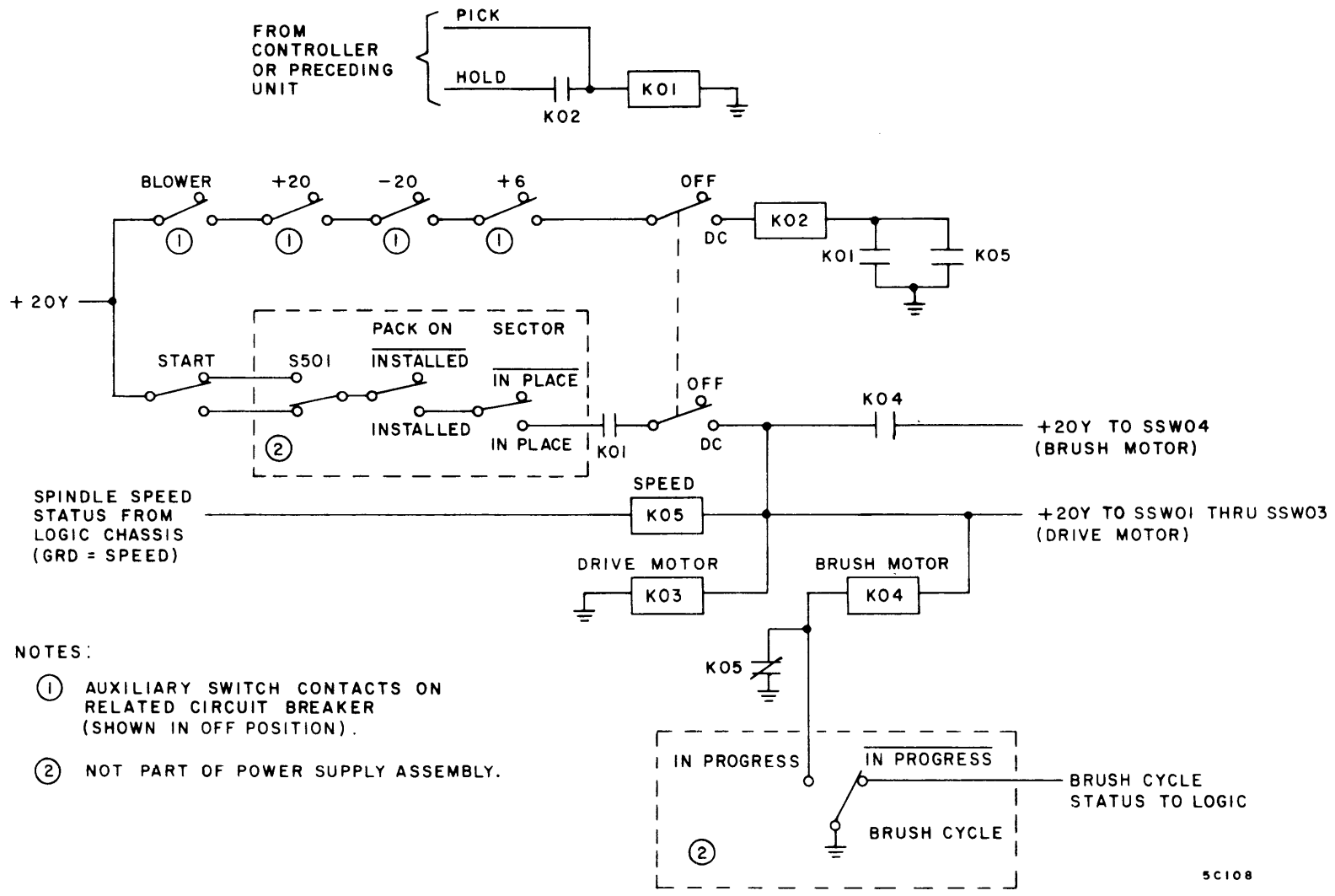

Figure 4-5. Power Supply - Sequencing (Upper Deck Only)
Series Code 05 And Below

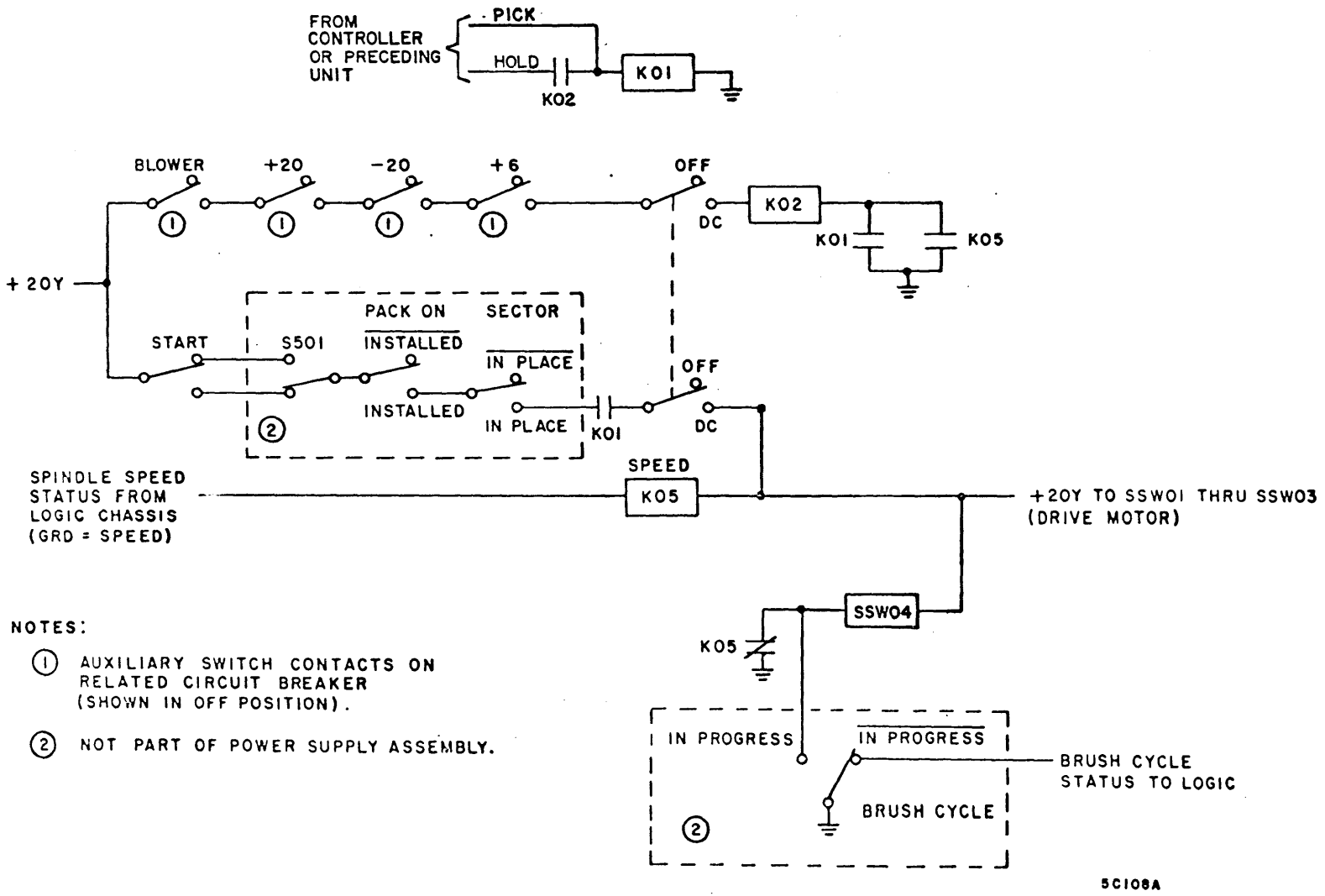

Figure 4-5.1. Power Supply - Sequencing (Upper Deck Only)
Series Code 06 And Above

3. With circuit breakers on and DC/OFF switch set to DC, the closing contacts of K02 caused the following:
   a. Distributed +6, +20, and -20, and -20 vdc to the A row of the logic chassis.
   b. Applied holding current to armature of relay K01.

NOTE

For units Series Code 05 and below use steps 4 thru 9, for units Series Code 06 and above use steps 10 thru 13.

4. Press operator panel switch S501 (or actuate power supply START switch).
5. The +20Y voltage energizes K03 (K05 does not energize because spindle speed is zero).
6. The +20Y voltage also energizes relay K04. Closing contacts of K04 cause +20Y voltage to be applied to SSW04. The solid-state switch conducts ac power and the brush motor starts. Brush cycle switch transfers to the in-progress position.
7. When the logic chassis detection circuit determines that the spindle speed is adequate, K05 energizes. The contacts of K05 cause the following:
   a. The +40 voltage is distributed to the read/write logic on the upper deck (Figure 4-4).
   b. The +40Y voltage is distributed to the solenoids on the upper deck (Figure 4-4).
   c. One of the grounds to K04 is removed, but K04 does not de-energize since the brush cycle is still in progress.
8. As the disk pack cleaning brushes return from sweeping the disk surfaces, the brush cycle switch is mechanically transferred and de-energizes K04. This removes the enabling +20Y voltage to SSW04, and ac power to the brush motor is dropped.
9. Completion of the brush cycle allows the start of the First Seek (load heads) function. Upon completion of the First Seek operation the deck is ready to respond to commands from the controller.

10. Press operator panel switch S501 (or actuate power supply START switch). This will initiate operation of the brush cycle by enabling the +20Y voltage to SSW04 thru the normally closed contacts of K05. This allows ac power to the brush motor. Brush cycle switch transfers to the in-progress position.

11. When the logic chassis detection circuit determines that the spindle is up to speed, K05 energizes. The contacts of K05 cause the following:

    a. The +40 voltage is distributed to the Read/Write logic on upper deck (Figure 4-4.1).

    b. The +40Y voltage is distributed to the solenoids on the upper deck (Figure 4-4.1) thru K06.

    c. One of the grounds to SSW04 is removed but brush cycle remains in progress due to brush cycle switch.

12. As the disk pack cleaning brushes return from sweeping the disk surfaces, the brush cycle switch is mechanically transfered and removes the ground from SSW04. The ac power to the brush motor is then dropped.

13. Completion of the brush cycle allows the start of the First Seek (load heads) function. Upon completion of the First Seek operation the deck is ready to respond to commands from the controller.

Power-Off Sequence

A power-off sequence begins when the operator panel switch S501 is pressed. The sequence is as follows:

1. Press S501 (actuating power supply panel START switch will also initiate the sequence).

NOTE

For units Series Code 05 and below use step 2 (Figure 4-5)
For units Series Code 06 and above use step 3 (Figure 4-5.1)

2. Relays K03, K04, and K05 de-energize. Contacts cause the following:

    a. K05 contacts disable +40 volts to read/write logic.

    b. K05 contacts disable +40Y voltage to hydraulic actuator solenoids and head latch solenoid. Read/write heads unload and the reverse biased (hydraulically) carriage moves in reverse to retracted stop at 2 ips (see Hydraulic Operations, Section 4 of this manual).

c. K05 contacts also provide a path to ground for relay K04 in preparation for next power-on sequence.

d. The application of the +20, -20, and +6 voltages to logic chassis will continue until the occurrence of one of the following: K01 drops because sequence voltage was removed at controller, or K02 drops because of either the actuation of a power supply switch or breaker (DC/OFF, +20, -20, +6, BLOWER) or removal of cabinet input power.

3. Relay K05 de-energizes. Contacts cause the following:

a. +40 volts to Read/Write logic is disabled.

b. +40Y voltage to hydraulic actuator solenoids and head latch solenoid is disabled. Read/Write heads unload and the reverse biased (hydraulically) carriage moves in reverse to retracted stop at 2 ips (see Hydraulic Operations, Section 4 of this manual).

c. Provide a path to ground for SSW04 in preparation for the next power-on sequence.

d. The application of the +20, -20, and +6 voltages to logic chassis will continue until the occurence of one of the following: K01 drops because sequence voltage was removed at controller, or K02 drops because of either the actuation of a power supply switch or breaker (DC/OFF, +20, -20, +6, BLOWER) or removal of cabinet input power.

LOGIC CHASSIS

The logic chassis assembly consists of a logic card section, a maintenance panel, and an input/output connector panel. The assembly is accessible through the rear door and is located at the top of the cabinet. The assembly is mounted on hinges to allow access to the power supply assembly. Three fans are mounted along the lower surface of the assembly. These fans are energized whenever the filter box circuit breaker is on, and they provide cooling air to the logic card section. The back cover of the entire assembly can be removed (four half-turn fasteners) to gain access to components and wiring.

The logic card section contains the bulk of the SPL logic cards used in the cabinet (four cards are located on each deck assembly). The vertically mounted cards are installed in two rows (A top row and B bottom row) at numerically identified locations. Refer to Section 5 of this manual for a description of the logical functions performed by the cards. Section 9 contains a tabulation of the wiring connections in the chassis.

The maintenance panel contains a set of test point jacks, switches, and an indicator for each deck in the cabinet. These components function primarily to isolate the occurrence of a fault on the related deck. Specific information on each control or indicator of this panel is provided in the Operation section for this equipment (see Preface of this manual for publication number).

Connectors located on the input/output connector panel are involved only with signals exchanged between a deck and the controller. Refer to Table 4-1 for a description of these signals. The Installation and Checkout section for this equipment covers cabling and I/O connector pin assignments (see Preface of this manual for publication number).

DECK ASSEMBLY

The deck assemblies (Figure 4-6) are responsible for the dynamic operations of an MDD: driving the disk packs, and loading and positioning the read/write heads. The deck assembly consists of a deck plate on which are mounted a drive motor assembly, a spindle assembly, a hydraulic pump, a carriage and carriage mount, three transducers, a disk cleaner assembly, and a hydraulic actuator.

The deck assembly mounts in the MDD cabinet on a drawer mechanism. The drawer may be extended out the front of the cabinet to load a disk pack, or extended out the rear of the cabinet for maintenance purposes.

Drive Motor Assembly

The drive motor drives the spindle assembly and the hydraulic pump. The motor is an induction type, 3/4-hp unit. The motor is secured to a mounting plate which bolts to the underside of the deck plate. Power is transferred via a flat, smooth-surfaced belt that threads over the pulleys of the spindle, hydraulic pump, and drive motor. A spring-loaded idler pulley maintains a constant tension on the belt.

The temperature of the motor is monitored by a thermal protection switch. To restore operation after an over-temperature condition, the red, 1/4-inch button on the top end of the motor must be manually reset (pressed).

Spindle Assembly

The spindle assembly is the physical interface between an MDD deck and a disk pack. The conical surface of the spindle cone (Figure 4-7) mates directly with the cone-shaped opening in the center of the disk pack.

Starting in the spindle cone and running through the center of the spindle assembly is the vertically free-floating lockshaft. The upper end of the lockshaft contains internal threads that engage the external threads of a stud projecting from the disk pack. When the disk pack cannister cover handle is rotated clockwise, the spring-loaded lockshaft is pulled upward and the disk pack is pulled down. As a result, the conical surfaces of the disk pack and the spindle cone are engaged by a force of approximately 200 pounds. A clutch mechanism protects the lockshaft from damage that could occur from over tightening the disk pack. When the disk pack is fully engaged, a release mechanism in the canister handle frees the canister from the disk pack.

A notched lock wheel secures to the bottom surface of the drive pulley. The notches of the wheel are engaged by the tip of the spindle lock pawl (Figure 4-6) when the deck drawer is open. This locks the spindle, making it easier to install or remove a disk pack. Opening the drawer of an operating deck will cause a loud ratcheting

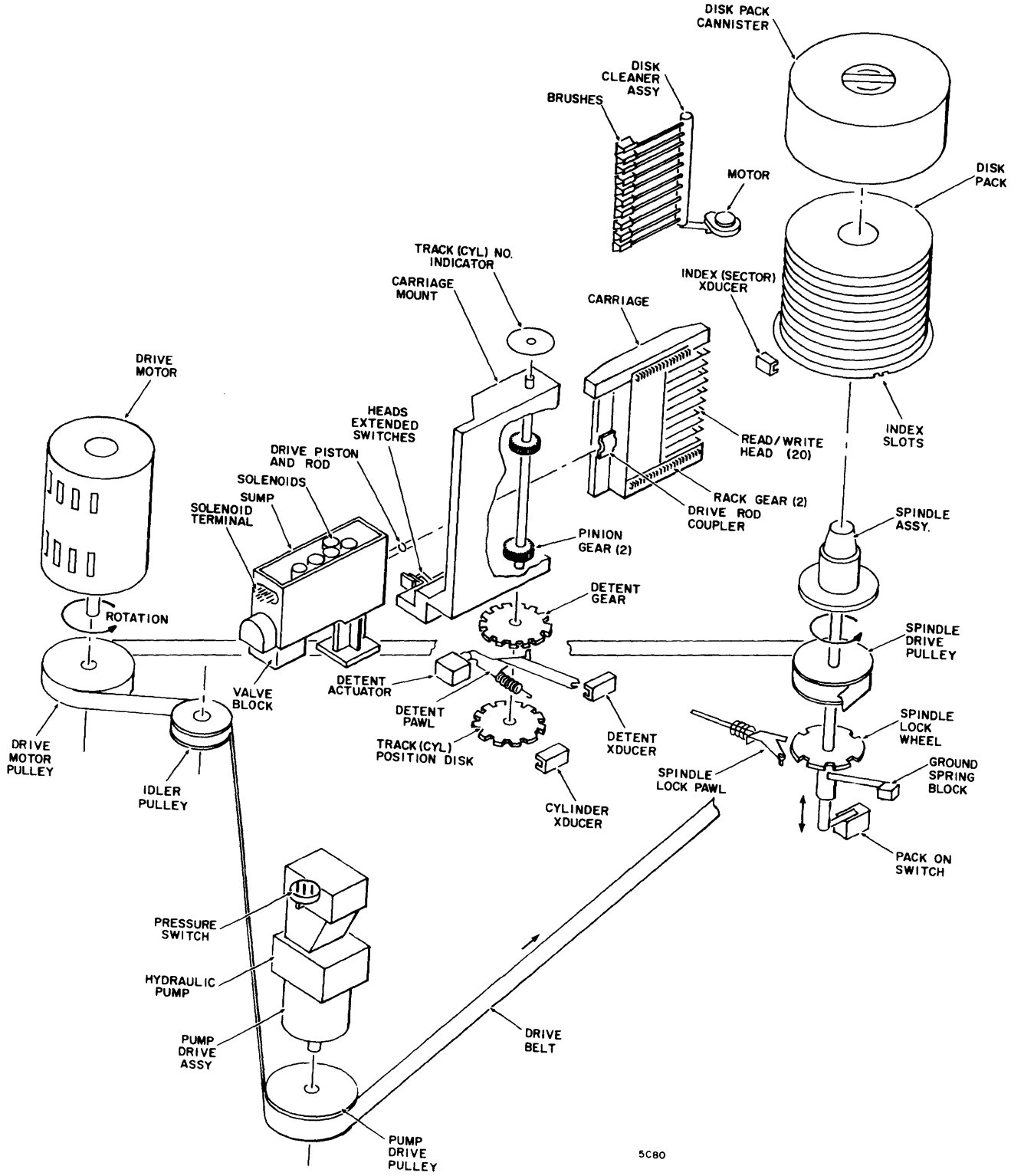

Figure 4-6. Deck Assembly

(refer to Figure 2-2). Closing the drawer will cancel the override. The spindle drive pulley is driven by a flat belt linking it to the drive motor pulley.

The Pack-On switch and ground spring are mounted at the lower end of the spindle assembly. The ground spring block is mounted so that it is always in contact with the ground sleeve. The Pack-On switch contacts transfer in response to the vertical movement of the lockshaft. When the shaft is up (disk pack mounted), the contacts are closed. When a pack is not installed, the shaft moves downward to deflect the switch actuator and transfer the contacts.

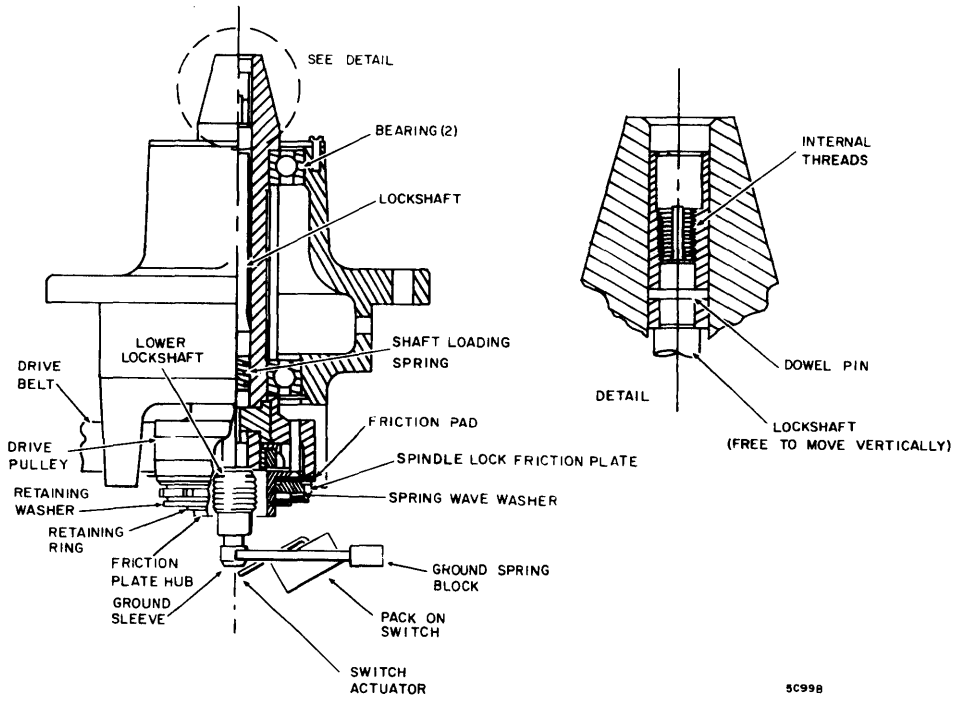

Figure 4-7. Spindle Assembly

Hydraulic Pump

The hydraulic pump is a positive-displacement type device capable of delivering 0.67 gpm at a nominal pressure of 200 psi.

The pump is located on the top of and at the rear of the deck assembly. The pump is seated on the pump drive assembly which functions to extend and couple the pump shaft through the deck to the pump drive pulley. A flat belt driven by the drive motor turns the pump.

The input and output hydraulic connections at the pump both originate at the hydraulic actuator. The hydraulic fluid pump and all pressure control valves are located in the hydraulic actuator.

A pressure sensing switch is installed on the pump output line. The switch transfers at a nominal output of 10 psi (approximately 50 rpm) and is used in conjunction with an operator panel indicator (see Section 2).

Carriage and Carriage Mount

The carriage and carriage mount (Figure 4-8) combine to form the vehicle that supports the read/write heads. Movement of the carriage, within the carriage mount, is controlled by the hydraulic actuator.

The carriage consists of an upper rail and a lower rail, separated by the receiver and the coupler plate. The rails contain bearing surfaces that interface with the various bearings and rollers of the carriage mount. Each rail has a rack gear that meshes with a pinion gear on the detent gear shaft (mounted vertically in carriage mount). The detent gear and the track position disk are mounted on the lower end of this same shaft. The ball tip of the hydraulic actuator drive rod is connected to the carriage by the drive rod coupler. When the hydraulic actuator extends or retracts the carriage, the detent gear shaft (and detent gear and track position disk) rotates.

The cylinder transducer senses the passing of the slots and lands of the rotating track position disk. From the center of one slot to the center of an adjacent land is recognized as a movement of one track. The transducer output causes the difference (decrement) counter content to decrease by one each time a track is crossed. When the logic determines that the next track to be crossed is the addressed track, it signals the detent solenoid to release the detent pawl. The spring-loaded pawl is drawn into the teeth of the detent gear and locks the carriage at the desired track. The detent transducer senses the pawl and gear engagement and signals the logic.

A track indicator (top of detent gear shaft) provides a visual indication of the current track location of the read/write heads.

A head loading mechanism mounts between the receiver and the coupler plate. Operation of this mechanism and the heads loaded switches is covered in the following paragraph.

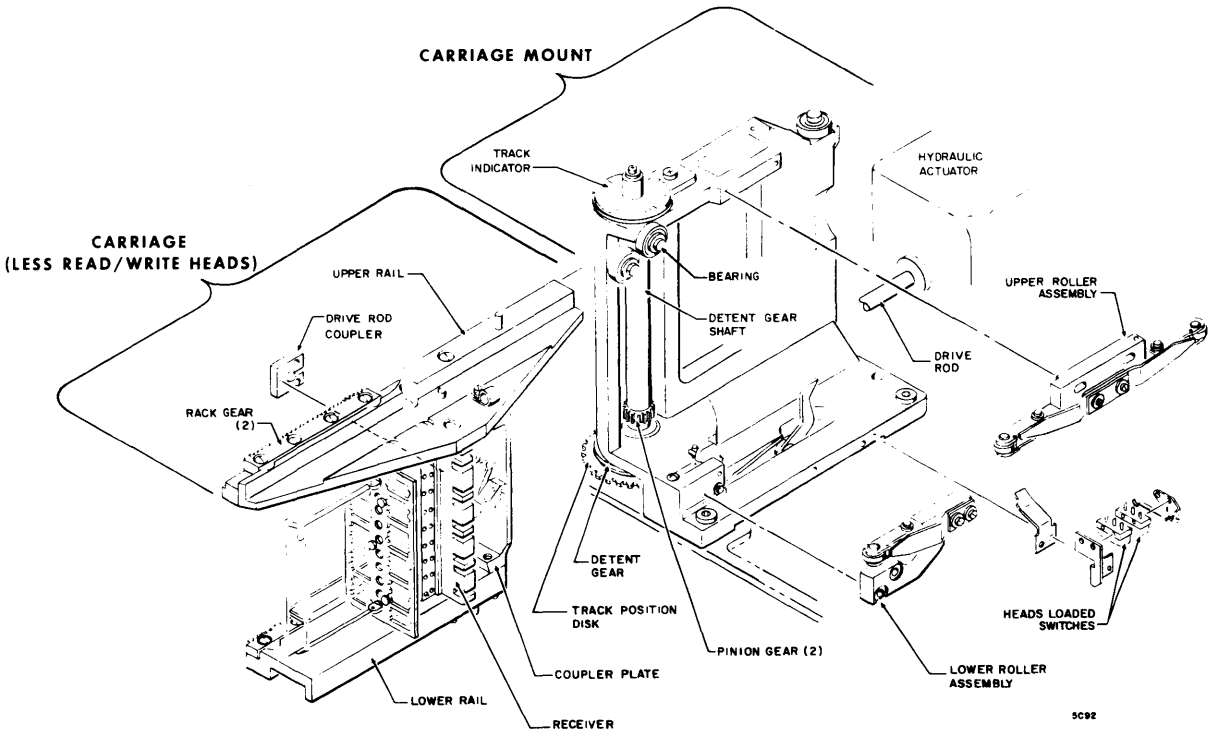

Figure 4-8. Carriage/Carriage Mount

Head Loading

The read/write heads must be loaded to the disk surfaces before exchanging data with the controller. The heads must be released from this position (unloaded) and driven clear of the disk pack when power is removed to the deck or the disk pack velocity falls below a predetermined rpm. The carriage components involved in these operations are identified in Figure 4-9.

Head loading amounts to applying spring pressure to the back of the read/write head so the aerodynamically shaped head face approaches the related disk surface. When the cushion of air that exists on the surface of the spinning disk is encountered, it resists the further approach by the head. Spring pressure is designed to just equal the opposing cushion pressure (function of disk pack rpm) at the required height. As a result, the head flies. However, if the spring pressure exceeds the cushion pressure (as would happen if the disk pack lost enough speed), the head will stop flying and contact the disk surface. This could cause damage to the head as well as the disk surface.

To prevent damage to the heads and/or the disk pack during automatic operation, loading occurs only after the disk pack is up to speed and the heads are over the disk surfaces. For the same reason, the heads unload automatically and are retracted if the disk pack rpm drops out of tolerance. During manual operations, heads should never be loaded on a disk pack that is not rotating, nor should heads be loaded without a disk pack being installed on the spindle. (The Maintenance section for this equipment provides instructions on how to disable the head loading mechanism.) Head loading is a part of the First Seek function. As power to the deck is sequenced up, the drive motor starts, a brush cycle (approximately 60 seconds) is initiated, and the hydraulic pump begins operation. When the disk pack rpm reaches 2000, the extend solenoid (and head latch magnet) energizes and the carriage moves from the retracted position to the hydraulic home position. Upon completion of the brush cycle (brushes clear of disk pack), the hydraulic actuator forward solenoid energizes and the carriage moves forward toward the spindle and the forward mechanical stop. Head loading occurs during this forward motion.

The cam follower (part of carriage) moves along the head loading cam (part of carriage mount). When the follower encounters the up-ramp of the cam, the linkage rod assembly moves upward (Figure 4-9, part C). This causes each of the ten torsion rods to rotate which forces the 20 read/write heads toward the proper disk surface. The spring force of the torsion rod is opposed by the air layer on the disk surface and an equilibrium is attained with the heads flying over the disks.

As the carriage nears the spindle, the head load pawl enters the notch in the linkage and transfers the heads extended switch. The head latch magnet holds the pawl in the latched position until power (to magnet) is removed. Forward carriage motion continues until the cam follower contacts the head load cam latch. This contact frees the

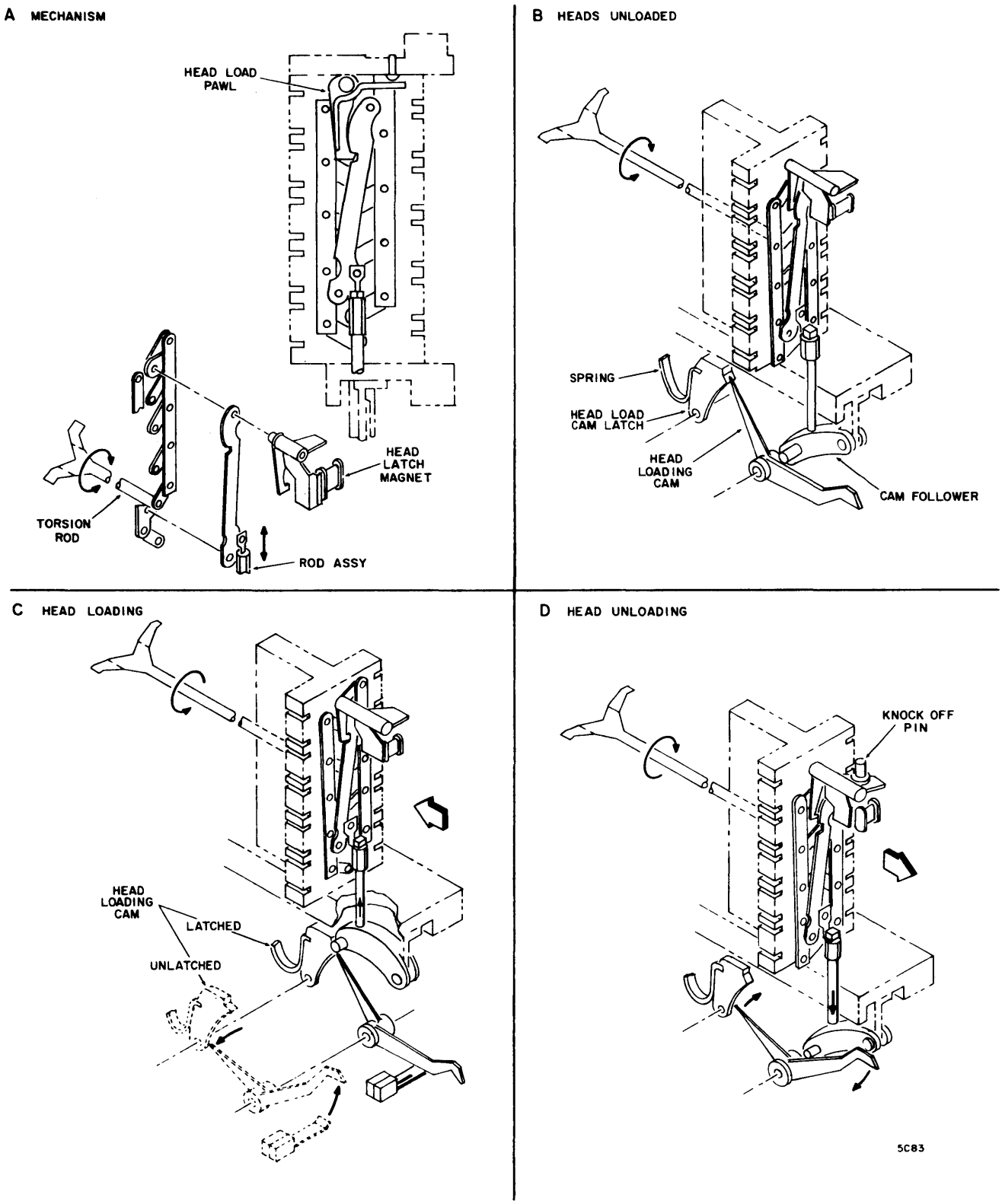

Figure 4-9. Head Loading Mechanism

end of the cam and it rotates downward to transfer the heads loaded switches. This transfer signals the logic that loading is complete and causes the carriage to be retracted and positioned to track 00. The heads remain loaded and latched until power is removed, the index (sector) transducer is displaced from sector disk of disk pack, or disk pack rpm drops below tolerance.

Head unloading (Figure 4-9, part D), occurs when solenoid power is removed to the head latch magnet. The head load pawl pulls out of the linkage notch, the torsion rods rotate to relieve the pressure to the back of the read/write heads, and the heads unload or move away from their respective disk surfaces. With solenoid power absent, the reverse biased (hydraulically) actuator moves the carriage toward the retracted mechanical stop. As the carriage moves in reverse, the linkage rod assembly pressing down on the cam follower pivots the head loading cam so that the tip (of cam) engages the head load cam latch. This relatching occurs as the carriage moves from hydraulic home to the retracted stop.

If the linkage malfunctions and fails to unload the heads, the upper roller assembly (Figure 4-8) contacts the knock off pin (Figure 4-9, part D). This contact forces the knock off pin downward to forcibly rotate the head load pawl clear of the head latch magnet pole face, the thereby unload the heads. The knock off pin is contacted by the roller somewhere between tracks -7 and -12.

Head/Arm Assemblies

Twenty head/arm assemblies are mounted on the carriage of each deck. A head/arm assembly consists of a read/write and erase coil package (head assembly) mounted at the end of a supporting arm structure.

The head assembly (Figure 4-10), which includes a cable and plug, is mounted on a gimbal ring which in turn is mounted on a floating arm. This method of mounting allows the head assembly to move (independent of the arm) tangentially and radially relative to a data track on the disk surface. Such motion is required to compensate for irregularities in the disk surface.

The arm structure consists of a floating arm secured to a heavier fixed arm. The end of the fixed arm opposite the head installs in the carriage receiver. The floating arm is the mounting point for the head and is necessarily flexible so that it can respond to

the force applied (on load button) by the torsion rod/spring during head loading. Each tip of the Y-shaped torsion spring loads a head, moving one head up and one head down.

The freedom and mobility of the head are necessary elements to being able to function with interchangeable disk packs. During head loading the 10 torsion rods rotate in unison to flex the 20 heads toward the air cushion of the spinning disk surfaces. The force applied by the torsion spring causes the heads to fly or float on the air cushion. Vertical motion by a disk surface (due to warpage or imperfection) is countered by a move in the opposite direction by the gimballed head and/or the floating arm. As a result, flight height remains nearly constant.

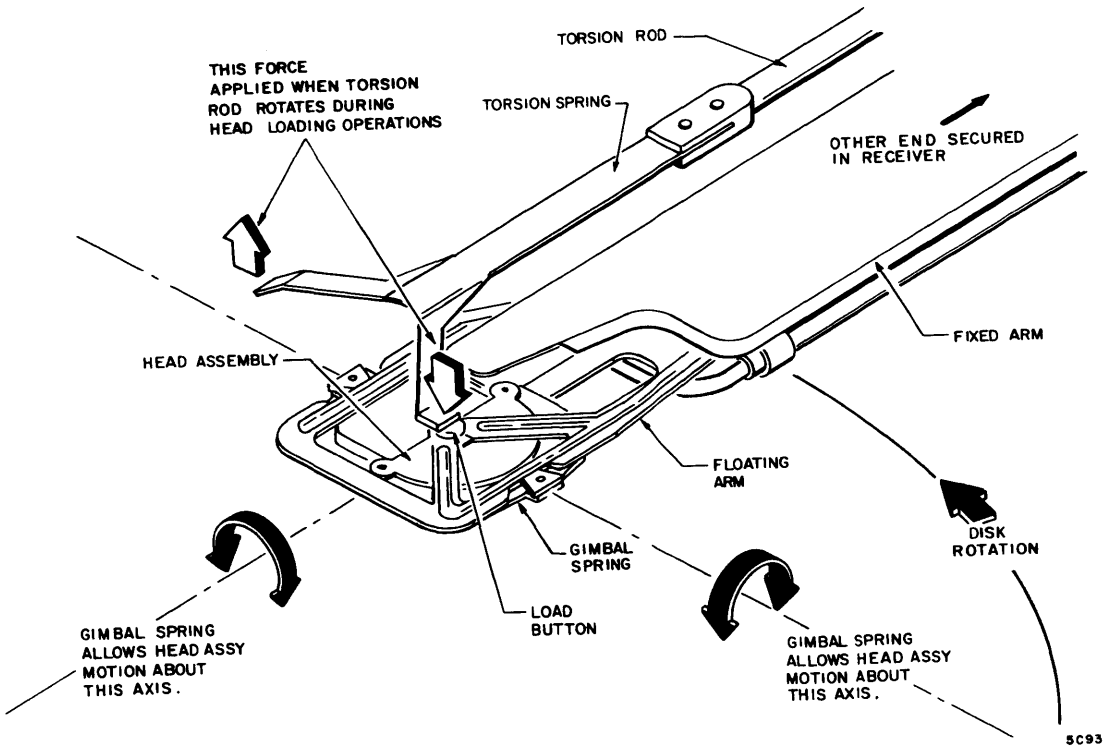

Figure 4-10. Head/Arm Assembly Motion

Transducers

Three transducers are used on each MDD deck: detent transducer, cylinder transducer, and index (sector) transducer. A transducer is a potted assembly consisting

of a primary coil and two secondary coils (Figure 4-11). The secondary and primary coils are separated by a notched and movable metal plate. The primary of the transducer is excited by a 187-kHz oscillator. When a notch (air gap) is between the secondary and primary windings, the output of the transducer secondary is maximum. The secondary output is minimum when the metal plate is between the windings. The secondary outputs drive a preamplifier card.

The related preamplifier card plugs into the transducer. The preamplifier output is processed in the logic chassis. The only adjustment required of this assembly amounts to repositioning the transducer relative to the slotted metal plate.

Detent Transducer

The detent transducer senses the location of the slot in the detent flag. When the detent pawl engages the gear, the slot is nearer to the bottom secondary coil (Figure 4-12). This causes the amplifier output to go negative. The preamplifier card filtering removes part of the 187-kHz signal. The detection circuit converts the negative signal to a "0".

If the detent pawl is disengaged from the gear, the flag slot moves nearer to the upper coil. This causes a positive amplifier output which is detected as a "1".

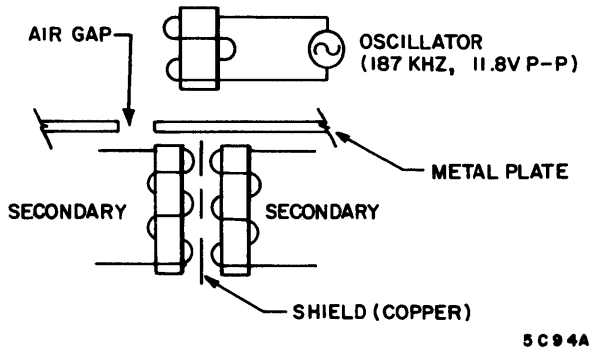

Figure 4-11. Transducer

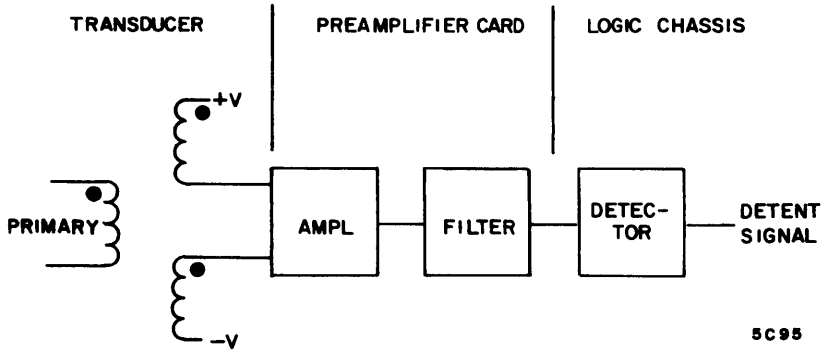

Figure 4-12. Detent Detection

Cylinder Transducer

The cylinder transducer senses slots in the edge of the rotating track position disk. The cylinder detection circuit (Figure 4-13) converts the analog output of the transducer to "1's" and "0's".

The slotted edge of the track position disk separates the primary of the transducer from the secondaries. As the disk rotates, the notches allow varying levels of coupling between the primary and the secondaries. Figure 4-14 shows rotational positions of the track position disk and the resulting cylinder detection. As the notch passes over secondary A, maximum coupling of the primary is possible and the output of secondary A is maximum. Since secondary B is covered by a land, coupling to the primary is minimum as is the output.

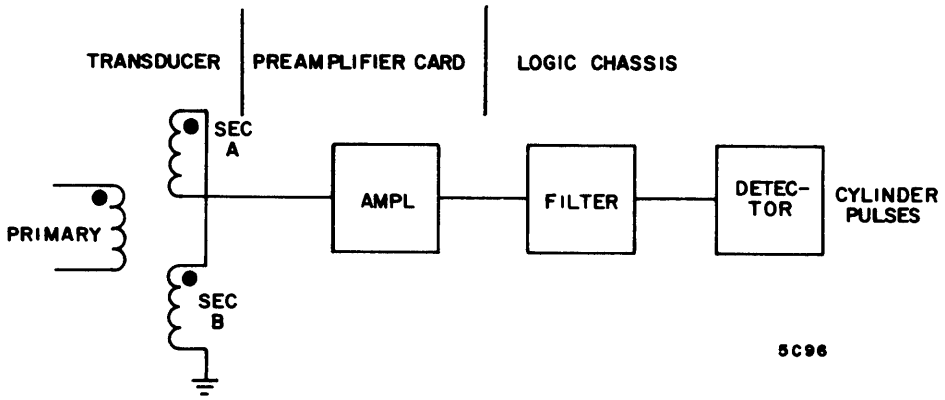

Figure 4-13. Cylinder Detection

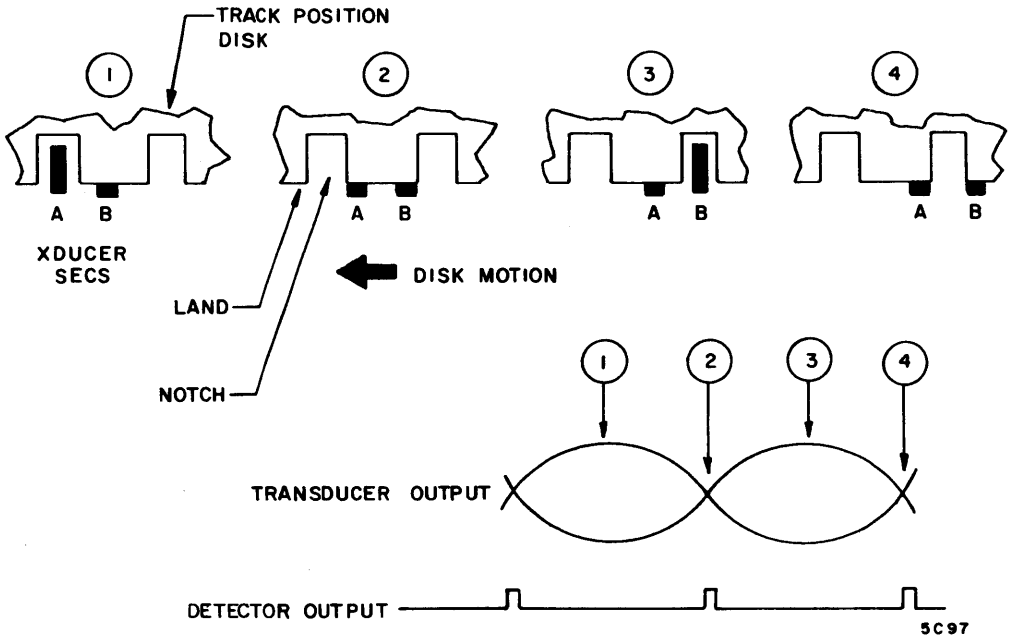

Figure 4-14. Cylinder Position Detection

As the disk rotates, both secondaries become covered by a land. Since the outputs are equal, the transducer output is a null.

Further rotation of the disk uncovers secondary B allowing maximum coupling and raising output B to the maximum. Since secondary A is now covered by a land, output A is a minimum.

Disk rotation continues until both secondaries are centered on a notch, but covered by a land. The outputs are again equal, so a null occurs in the output.

Each notch and each land nulls the transducer output. The detection circuit generates a pulse for each null in the transducer output.

Index (Sector) Transducer

This transducer senses notches in the edge of the sector disk (large disk at bottom of each disk pack).

Each notch on the sector disk causes a differential input to the preamplifier card amplifier (Figure 4-15). The detector generates a 55-μsec "1" pulse in response to each notch. These pulses are further processed by the MDD logic to determine if the disk pack speed is sufficient for continued operation.

All disk packs have two closely spaced notches called index. These notches indicate the beginning of a revolution of the disk pack. Some disk packs have, in addition to index, other notches equally spaced about the circumference of the sector disk. These notches are related to data organization on the disk pack.

Disk Cleaner Assembly

The disk cleaner assembly sweeps the disk pack recording surfaces free of any foreign materials. The sweep cycle occurs just before the read/write heads are loaded during the First Seek sequence.

The assembly consists of a motor, 10-comb-mounted brushes, a reset switch, motor to comb linkage, and a mounting base. The base mounts on the deck assembly and the brushes are pivot mounted on the base. Pivoting of the brushes is controlled by the motor, the linkage, and the switch. The motor is energized during the power on sequence and starts a 60-second (approximately) cycle. As the cycle proceeds, the brushes sweep toward the spindle until the linkage causes a reversal in direction. As the brushes return to the original position (clear of disk pack) the reset switch is encountered and transfers. This de-energized the Brush Motor relay and disables the motor.

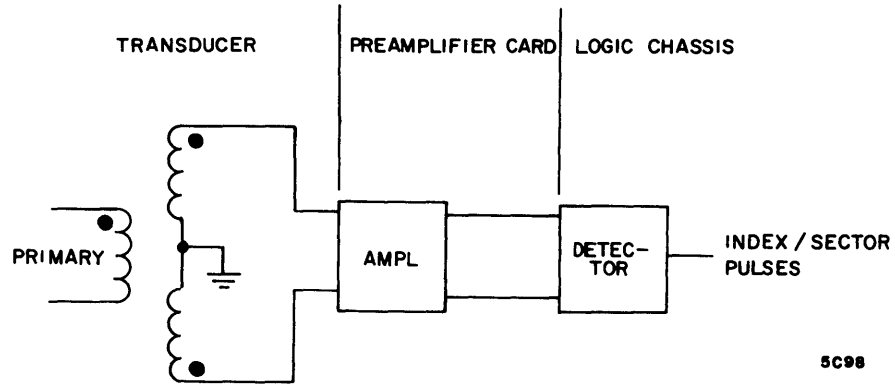

Figure 4-15. Index/Sector Detection

The brushes are mounted using a ball-slot detent mechanism. If power is dropped or lost during the brush cycle, the operator can override the detent and rotate the brushes clear of the disk pack so that the disk pack can be removed from the spindle. The brush cycle during the next Power-on sequence will be an incomplete cycle as the brushes automatically reset themselves. Subsequent cycles will be normal.

Hydraulic Actuator

The hydraulic actuator drives and locks the carriage mounted read/write heads to any one of 203 discrete positions or cylinders of data. Activity of the hydraulic actuator is regulated by five solenoid-controlled valves that direct the routing of hydraulic fluid. The solenoids are controlled from the MDD logic chassis. Hydraulic fluid at a pressure of approximately 200 psi is provided by the hydraulic pump.

The hydraulic actuator (Figure 4-16) consists of a piston and sump block in or on which are mounted a valve block, two hydraulic fluid filters, an extend piston, a drive piston, and five solenoid and valve combinations.

Valve Block

The valve block contains all valves and most of the related fluid passages of the unit. The block mounts directly under the sump chamber of the piston and sump block.

Filters

The two fluid filters are located in the sump portion of the piston and sump block. The primary filter is a large-particle screen in the pump suction outlet. The secondary filter removes smaller particles from a bypass flow originating when the slow solenoid is energized.

A third filter removes smaller particles and is located in the pump output pipe between the pump and the hydraulic actuator.

Extend Piston

The extend piston is located in the rear cylinder of two concentrically bored cylinders of the piston and sump block. This piston is hydraulically positioned to either the extend or the retracted position by the status of the extend solenoid. Whenever power

is applied to the deck, the extend solenoid is energized and the related valve is closed. Hydraulic pressure on the larger rear face of the piston drives it forward to a positive stop. This is the extended position, and the piston remains in this position until power to the deck is dropped. In the extended position the forward face of the extend piston functions as a hydraulically cushioned stop for the drive piston and also establishes the hydraulic home position for the carriage. When deck power is removed, the extend solenoid de-energizes, the spring-loaded valve opens, and the piston moves to the retracted position. As a result, the effective operating chamber for the drive piston is extended to the rear of the carriage and the carriage is retracted to a position where the heads are clear of the disk pack surfaces.

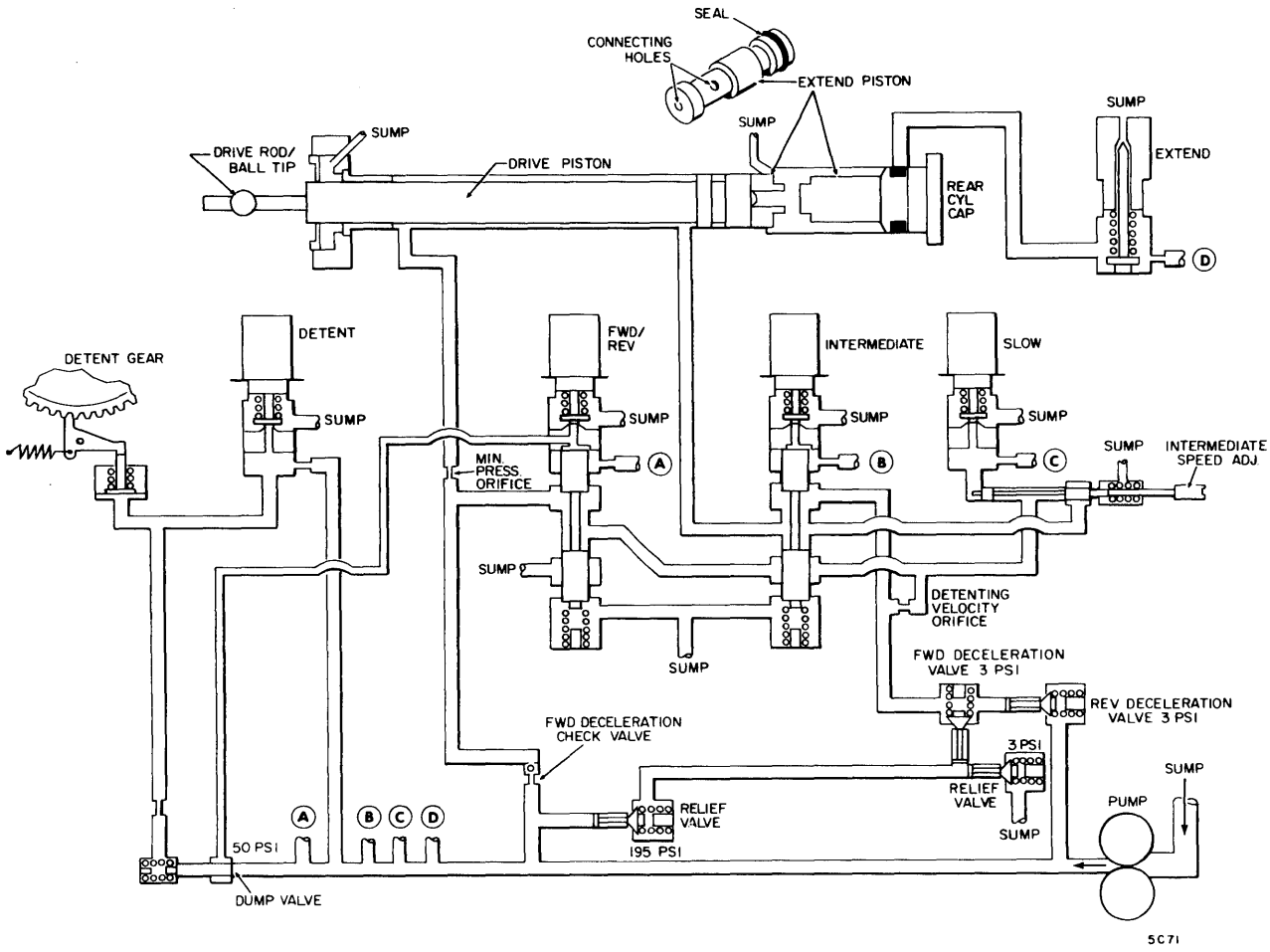

Figure 4-16. Hydraulic Actuator - Power Off

Drive Piston

The drive piston operates in the smaller forward cylinder of the piston and sump block. This piston connects, via the ball tip, to the movable carriage (mounting point of the read/write heads). The drive piston is constantly biased in the reverse direction by hydraulic pressure applied via the forward deceleration check valve and the minimum pressure orifice. Piston direction and rate of motion are controlled by three solenoids and valves.

Solenoids and Valves

The hydraulic actuator uses five solenoid and valve combinations. The function of the extend solenoid and valve was discussed previously.

The detent solenoid and valve controls the routing of hydraulic pressure to the detent actuator (not physically a part of the hydraulic actuator). When hydraulic pressure is available and the detent solenoid is de-energized, the pressure is applied to the detent actuator to pivot the detent pawl out of the detent gear. When the detent solenoid is energized, the related valve opens to vent pressure to the sump, and the detent pawl spring pulls the pawl into the gear.

Three solenoids and valves direct the routing of hydraulic fluid to the drive piston. All solenoid activity is controlled by signals originating in the logic chassis. The solenoids are located in the sump chamber of the hydraulic actuator and the control valves are located in the valve block. Electrical connections are via a solenoid terminal at the rear of the actuator. Each solenoid operates with at least one related valve. This valve is open when the solenoid is energized, and closed (spring-loaded) when the solenoid is de-energized. The forward/reverse, intermediate, and slow solenoids each control an additional spring-loaded spool. When the related solenoid is de-energized, system pressure from the hydraulic pump overrides the spring force and repositions the spool toward the spring.

Hydraulic Operations

The following paragraphs describe the configuration of the hydraulic actuator during the various operational phases.

Power Off (Figure 4-16)

No power, electrical or hydraulic, is available to the deck during this phase. As a result, all spring-loaded valves or devices are positioned according to spring loading. The extend and drive pistons are in the retracted position. This positioning occurs during removal of power to the extend solenoid during the preceding power shut down. When the extend solenoid de-energizes, pressure to the rear of the extend solenoid is vented to the sump. Pressure still exists in actuator, even though the pump rpm is decreasing. The reverse biased drive piston under the influence of this pressure moves in reverse, pushing the extend piston ahead of it, to the retracted position.

Hydraulic Home (Figure 4-17)

Hydraulic home is the physical location established when the extend piston moves to the extend position. The actuator moves to hydraulic home at the beginning of each First Seek operation. It is the starting point for the forward motion required to load and latch the read/write heads. The sequence of events for this phase is as follows:

1. Hydraulic pump delivers pressure increasing toward 200 psi.
2. Increasing pressure and de-energized solenoids cause forward/reverse and intermediate spools to move downward and slow spool to move to right.
3. De-energized extend solenoid vents pressure to sump. Extend piston stays in retracted position (Figure 4-16).
4. When pump pressure reaches approximately 200 psi, detent actuator pivots pawl out of detent gear and relief valves begin controlling pressure.
5. When disk pack exceeds required speed, power is applied to extend solenoid. Vent to sump is blocked, pressure moves extend piston (and drive piston) to left, and heads move into disk pack to hydraulic home position.

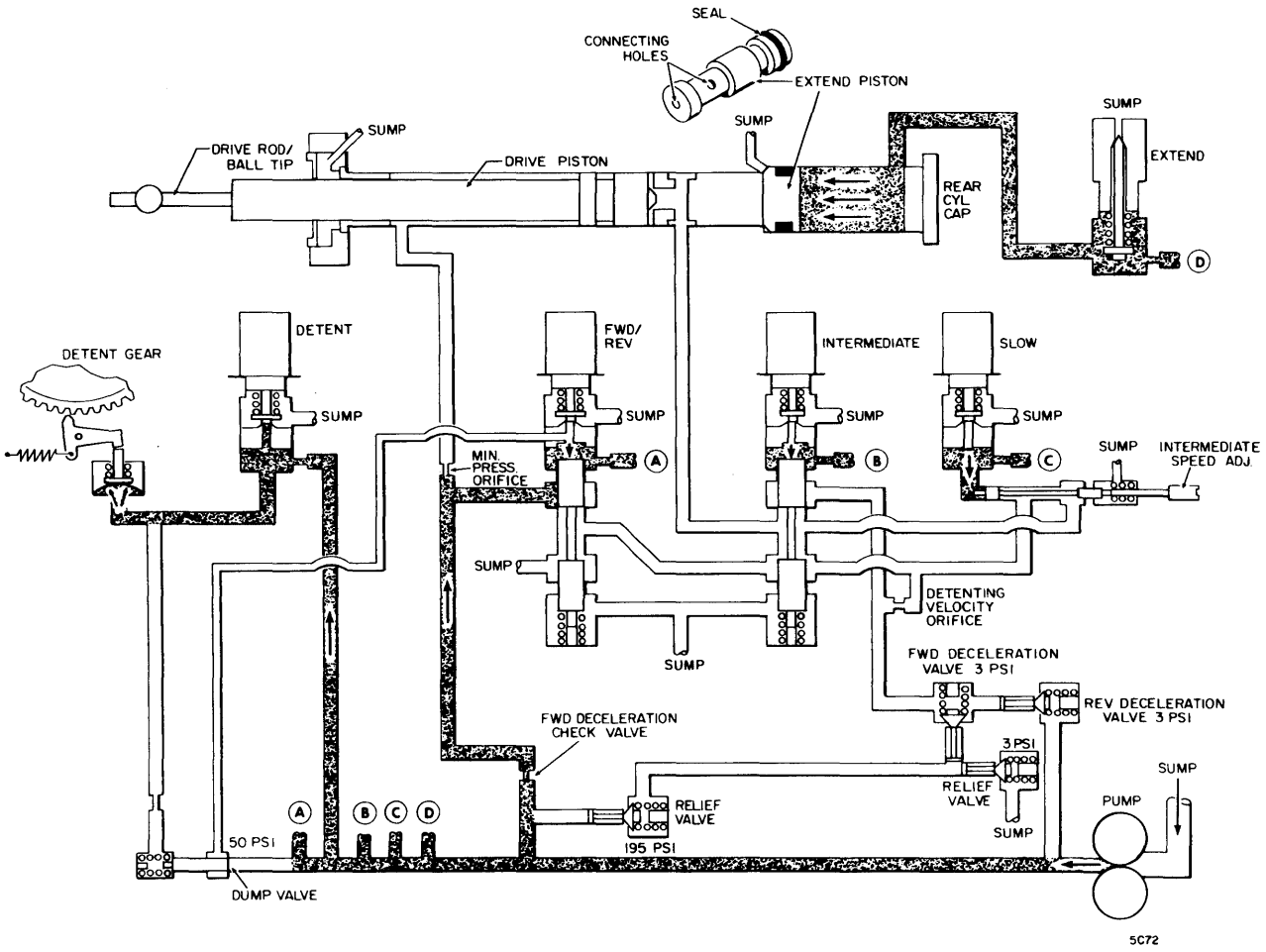

Figure 4-17. Hydraulic Actuator - Hydraulic Home

Detent (Figure 4-18)

The detent phase occurs at the end of each seek operation. The operation consists of removing pressure to the detent actuator so that the detent pawl spring pivots the pawl to engage the detent gear and lock the carriage to a track. The sequence of events for this phase is as follows:

1. During a First Seek or a RTZS operation, the detent solenoid energizes when the leading edge of the first track pulse is sensed as the carriage moves forward from hydraulic home (after the heads have loaded during First Seek). During a forward Direct Seek operation, the detent solenoid energizes when the leading edge of the first track pulse is sensed after the decrement counter indicates less than 2 tracks to go to the desired track. The forward/reverse solenoid remains energized.

   During a reverse Direct Seek operation, the detent solenoid energizes when the leading edge of the first track pulse is sensed after the decrement counter indicates less than 2 tracks to go to the desired track. This causes the forward/reverse solenoid to energize. Changing the direction of carriage motion at this point allows the detent pawl to engage the gear in the same manner as for a forward seek.

2. Energized detent solenoid vents pressure to sump. Loss of pressure in detent actuator causes spring to pivot detent pawl into detent gear.

3. The 50 psi dump valve opens to vent system pressure to sump (via forward/reverse solenoid valve). This causes system pressure to drop to 50 psi and thereby prevents excessive heating of hydraulic fluid.

4. Slow solenoid remains energized.

Forward Operations

The length of the seek determines the forward operations to be used. If the seek is in excess of 26 tracks when the forward/reverse solenoid is energized, the read/write heads move toward the center of the disk pack in the forward fast mode (26 ips). This rate of access continues until the logic determines that there are less than 26 tracks to go to reach the desired track. When this determination is made, the logic energizes the intermediate solenoid which causes the access to continue in the forward intermediate mode (7 ips). When the heads are less than four tracks from the desired track, the logic energizes the slow solenoid. This reduces the access rate to 2 ips (forward slow mode), which continues until the detent pawl engages the detent gear and stops the heads at the desired track. If the desired track is less than 26 tracks but more than 3 tracks from the current location, the intermediate solenoid is energized immediately. In this case the seek would consist of a forward intermediate mode, followed by a forward slow mode, and detent.

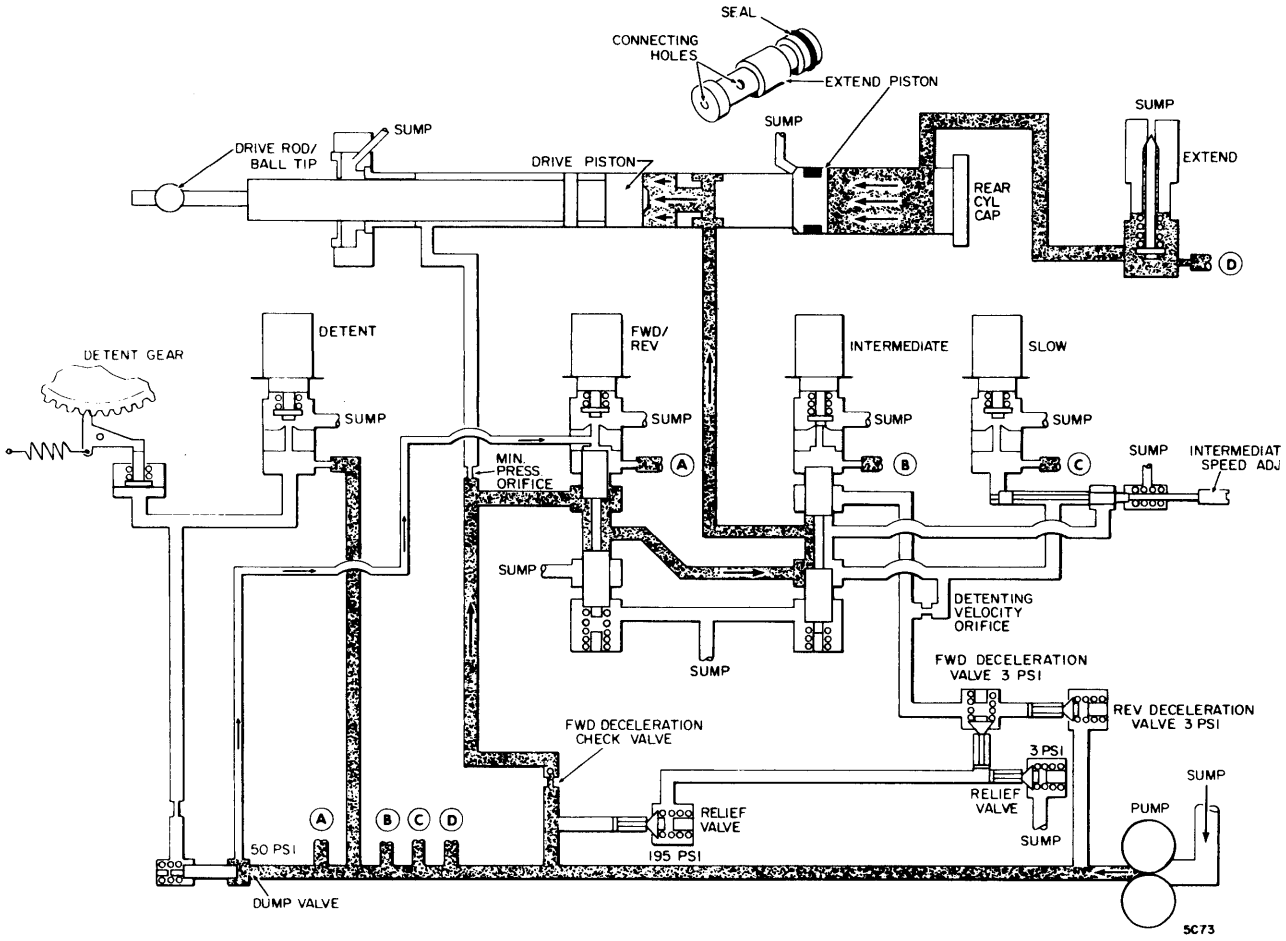

Figure 4-18. Hydraulic Actuator - Detent

For a seek of three tracks or less, both the slow and intermediate solenoids would energize immediately. The seek would consist of a forward slow mode followed by detent.

Forward motion is stopped by detenting, but there is a back-up method in the form of a mechanical stop.

Forward Fast Mode (Figure 4-19): The sequence of events for this mode is as follows:

1. With extend solenoid energized and detent solenoid de-energized, the forward/reverse solenoid energizes.

2. Open forward/reverse valve vents pressure to sump. Resulting pressure drop causes upward movement of spring-loaded forward/reverse spool.

NOTE

Pressures at left and right faces of drive piston are equal. Drive piston moves to left because area of face is greater

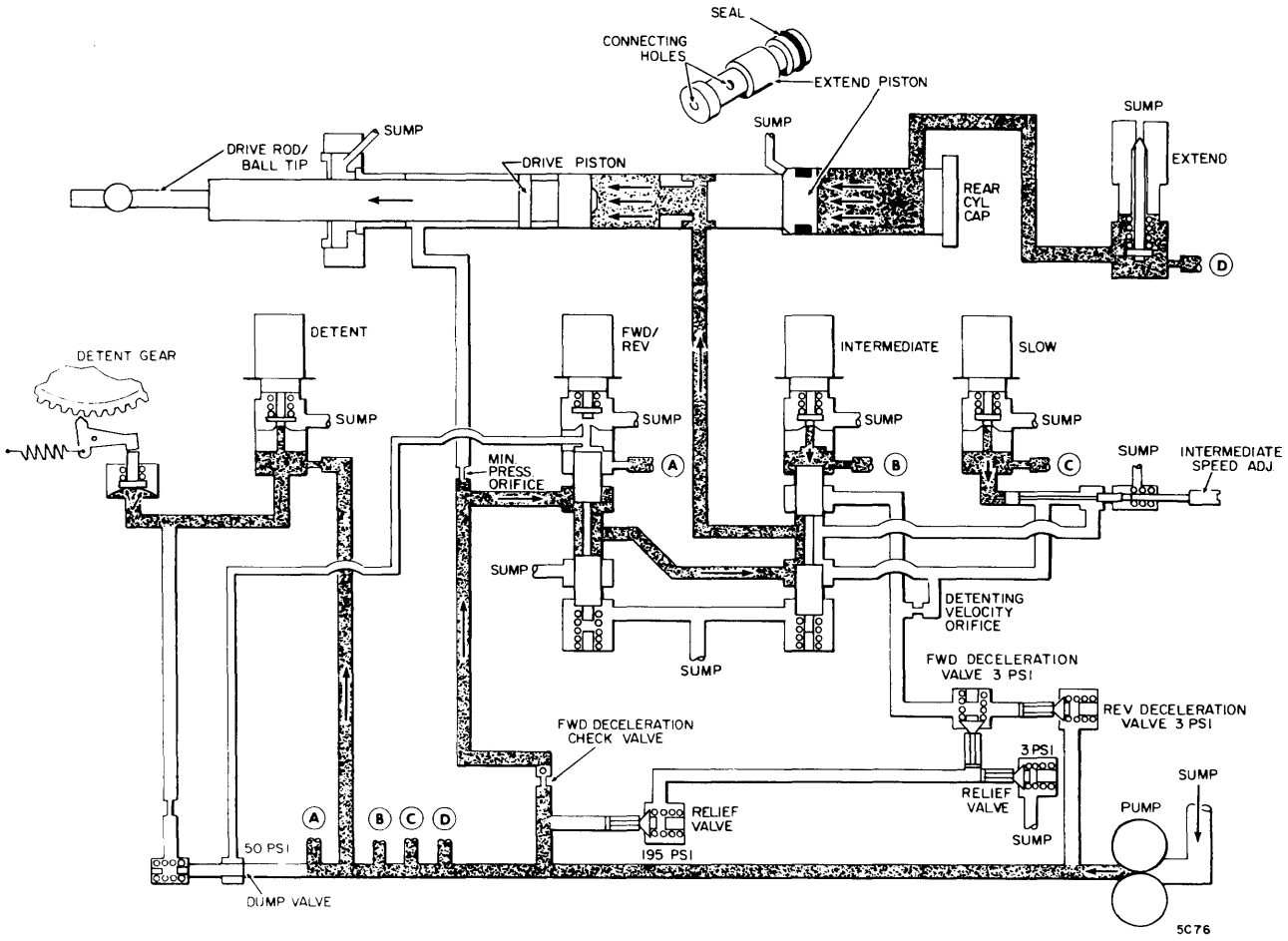

Figure 4-19. Hydraulic Actuator - Forward Fast

3. Hydraulic fluid flows through hole in extend piston causing drive piston to move left (forward) at 26 ips.

Forward Intermediate Mode (Figure 4-20): The sequence of events for this mode is as follows:

1. With extend solenoid energized and detent solenoid de-energized, forward/reverse and intermediate solenoids energize.
2. Open forward/reverse and intermediate valves vent pressure to sump. Resulting pressure drop causes upward movement of spring-loaded forward/reverse and intermediate spools.
3. Hydraulic fluid flows past forward/reverse spool and around intermediate spool. It then branches into parallel paths through detenting velocity orifice and slow spool, rejoining at and passing the intermediate spool. From here it passes through hole in extend piston causing the drive piston to move left at 7 ips.

Forward Slow Mode (Figure 4-21): The sequence of events for this mode is as follows:

1. With extend solenoid energized and detent solenoid de-energized, forward/reverse, intermediate, and slow solenoids energize.
2. Open forward/reverse, intermediate, and slow valves vent pressure to sump. Resulting pressure drop causes upward movement of spring-loaded forward/reverse and intermediate spools and slow spool moves to left.
3. Hydraulic fluid flows past forward/reverse spool and around intermediate spool. It then flows through detenting velocity orifice, past intermediate spool and out forward face of extend piston to rear of drive piston.
4. Drive piston moves left at 2 ips.

Reverse Operations

As with forward operations, the length of the seek determines the mode(s) required to complete the seek.

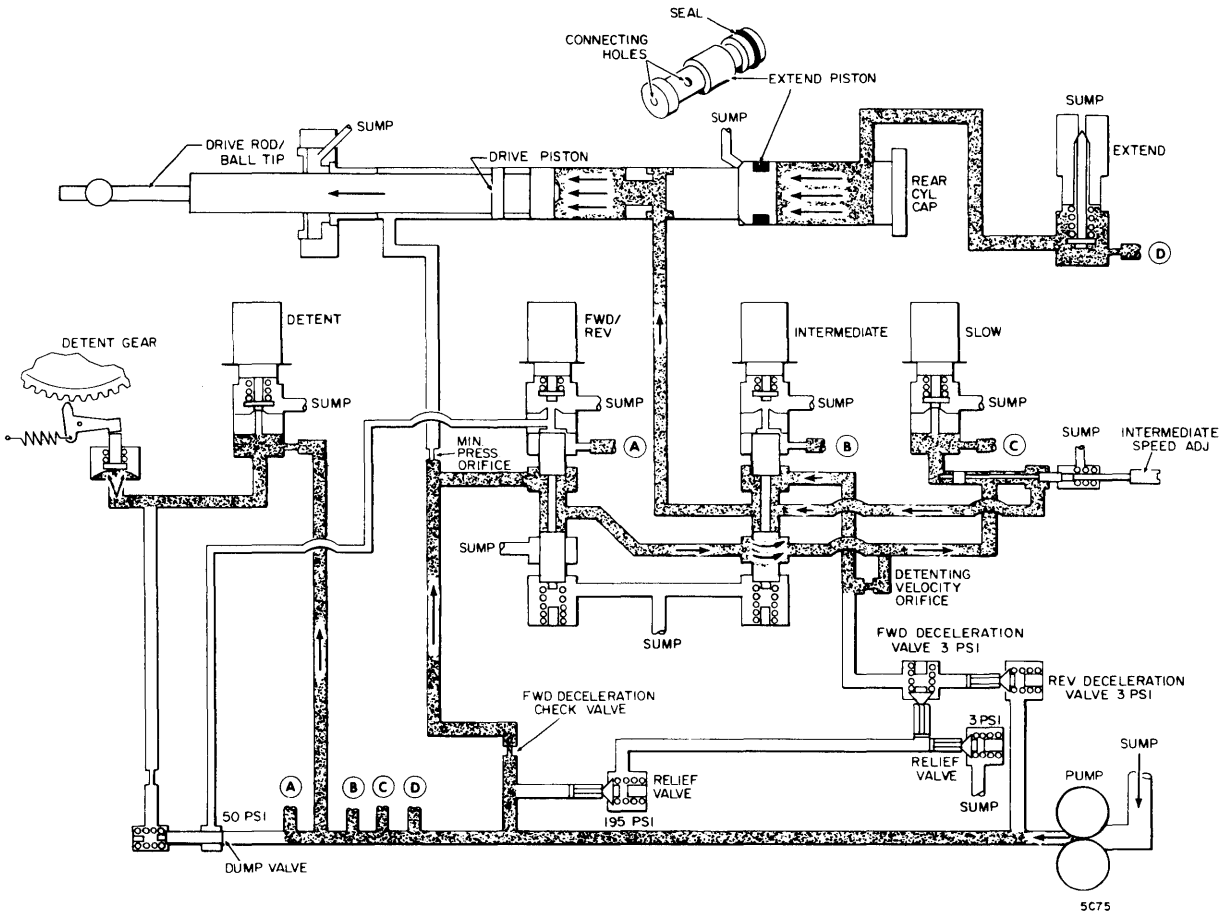

Figure 4-20. Hydraulic Actuator - Forward Intermediate

Reverse motion is stopped by switching to forward motion and then detenting or by the drive piston encountering the hydraulic cushion on the front face of the extend piston.

Reverse Fast Mode (Figure 4-22): The sequence of events for this mode is as follows:

1. With extend solenoid energized and detent solenoid de-energized, forward/reverse solenoid de-energizes.
2. Closed forward/reverse and intermediate valves cause line pressure to move related spools downward.

3. Hydraulic fluid at rear face (right end) of drive piston flows past intermediate spool and returns to sump at lower end of forward/reverse spool.

4. Hydraulic fluid flows through minimum pressure orifice to left face of drive piston and piston moves right at 26 ips.

Reverse Intermediate Mode (Figure 4-23): The sequence of events for this mode is as follows:

1. With extend solenoid energized and detent solenoid de-energized, forward/reverse solenoid de-energizes and intermediate solenoid energizes.

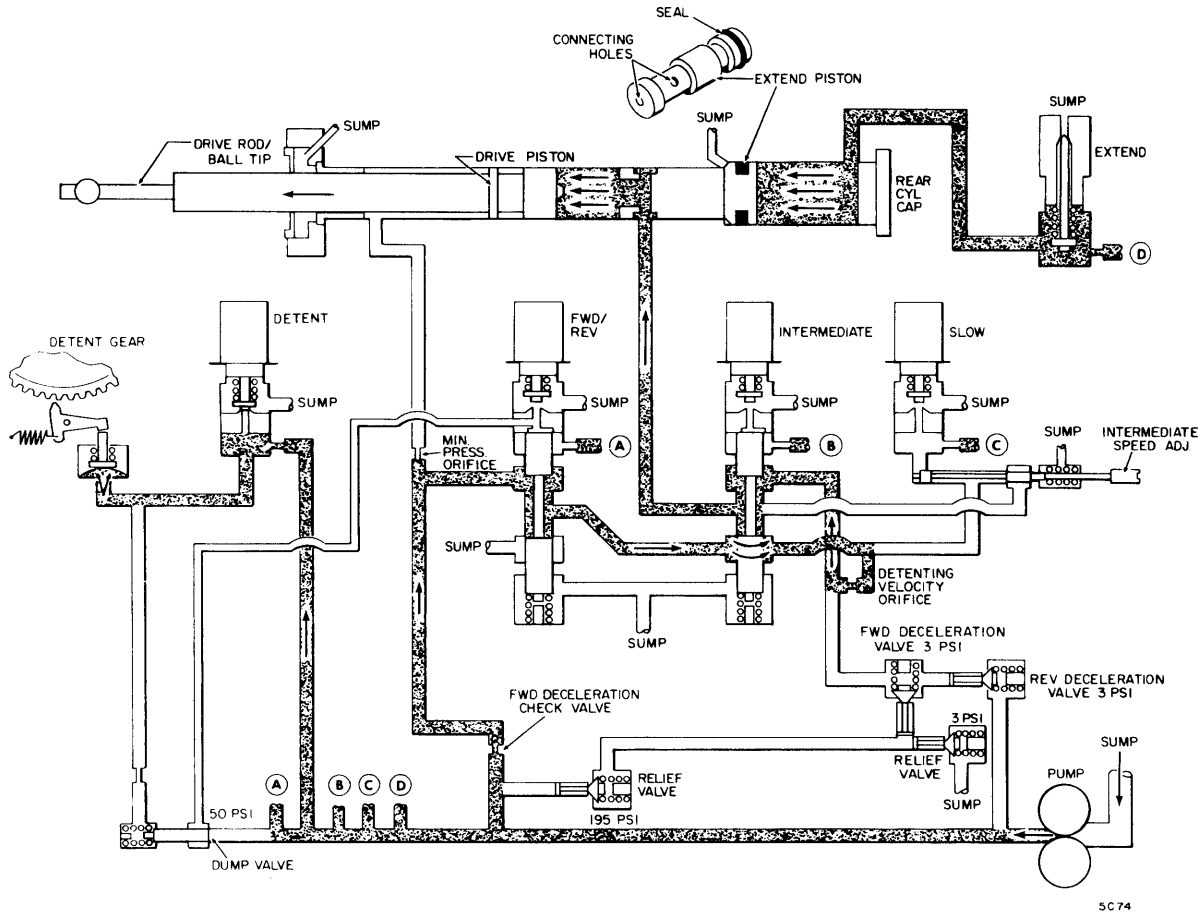

Figure 4-21. Hydraulic Actuator - Forward Slow

2. Closed forward/reverse valve causes line pressure to move related spool downward. Intermediate spool rises.

3. Hydraulic fluid at rear face of drive piston flows past intermediate spool and branches into two parallel paths past slow spool and through detenting velocity orifice. The paths rejoin to pass around the intermediate spool and vent to sump at forward/reverse spool.

4. Hydraulic fluid flows through minimum pressure orifice to left face of drive piston and piston moves right at 7 ips.

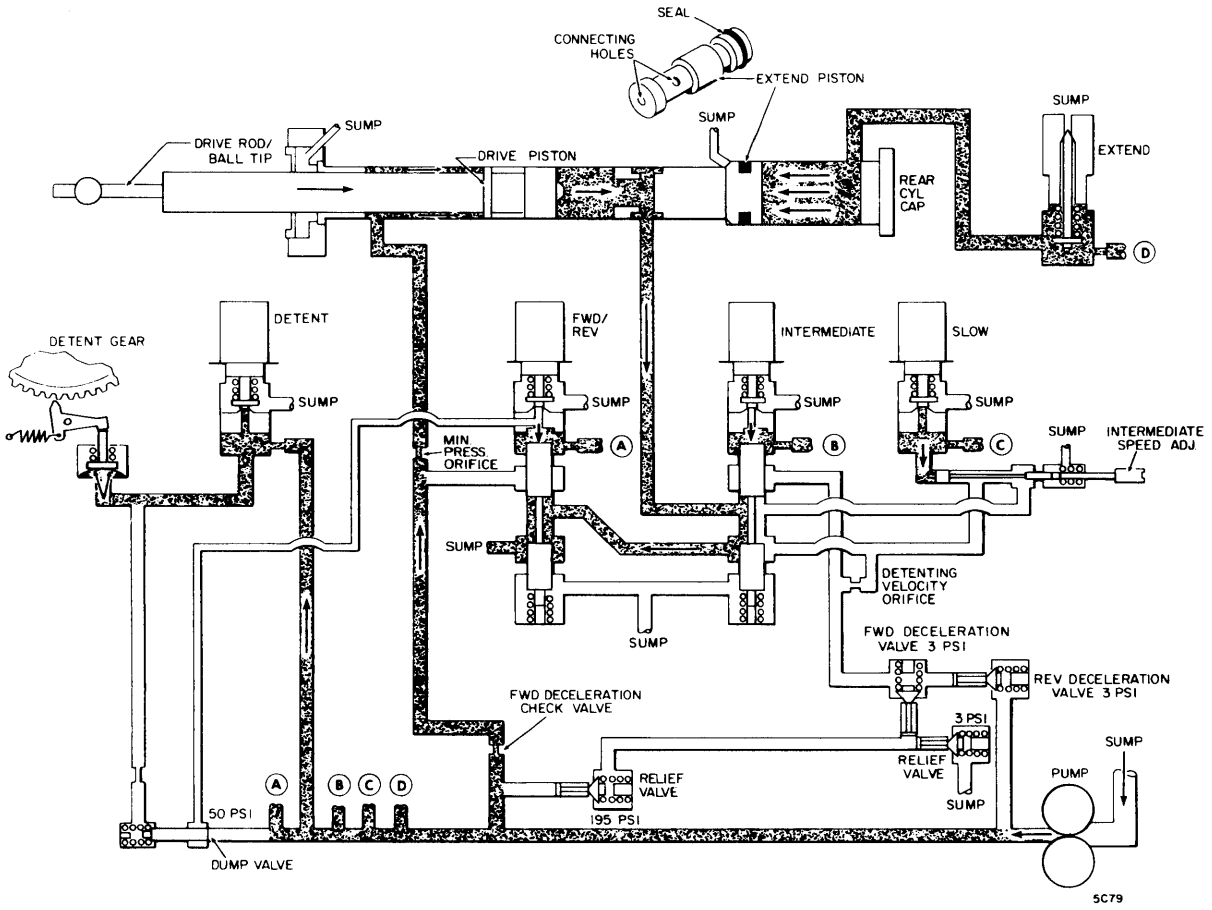

Figure 4-22. Hydraulic Actuator - Reverse Fast

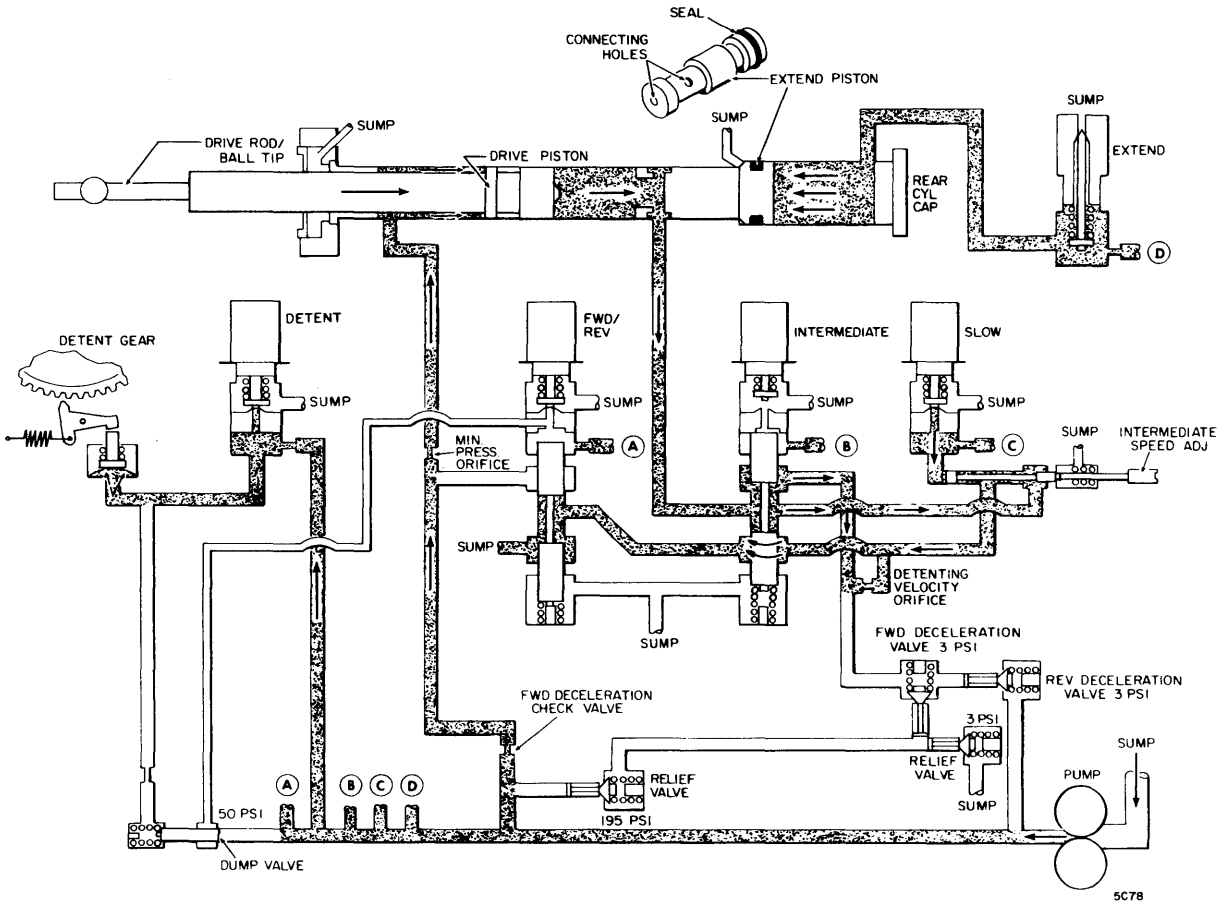

Figure 4-23. Hydraulic Actuator - Reverse Intermediate

Reverse Slow Mode (Figure 4-24): The sequence of events for this mode is as follows:

1. With extend solenoid energized and detent solenoid de-energized, forward/ reverse solenoid de-energizes and slow and intermediate solenoids energize.
2. Closed forward/reverse valve causes line pressure to move related spool downward. Open intermediate valve causes related spool to rise. Open slow valve causes slow spool to move to left.

3. Hydraulic fluid at rear face of drive piston flows past intermediate spool, through detenting velocity orifice, over intermediate spool, and vents to sump past forward/reverse spool.

4. Hydraulic fluid flows through minimum pressure orifice to left face of drive piston and piston moves right at 2 ips.

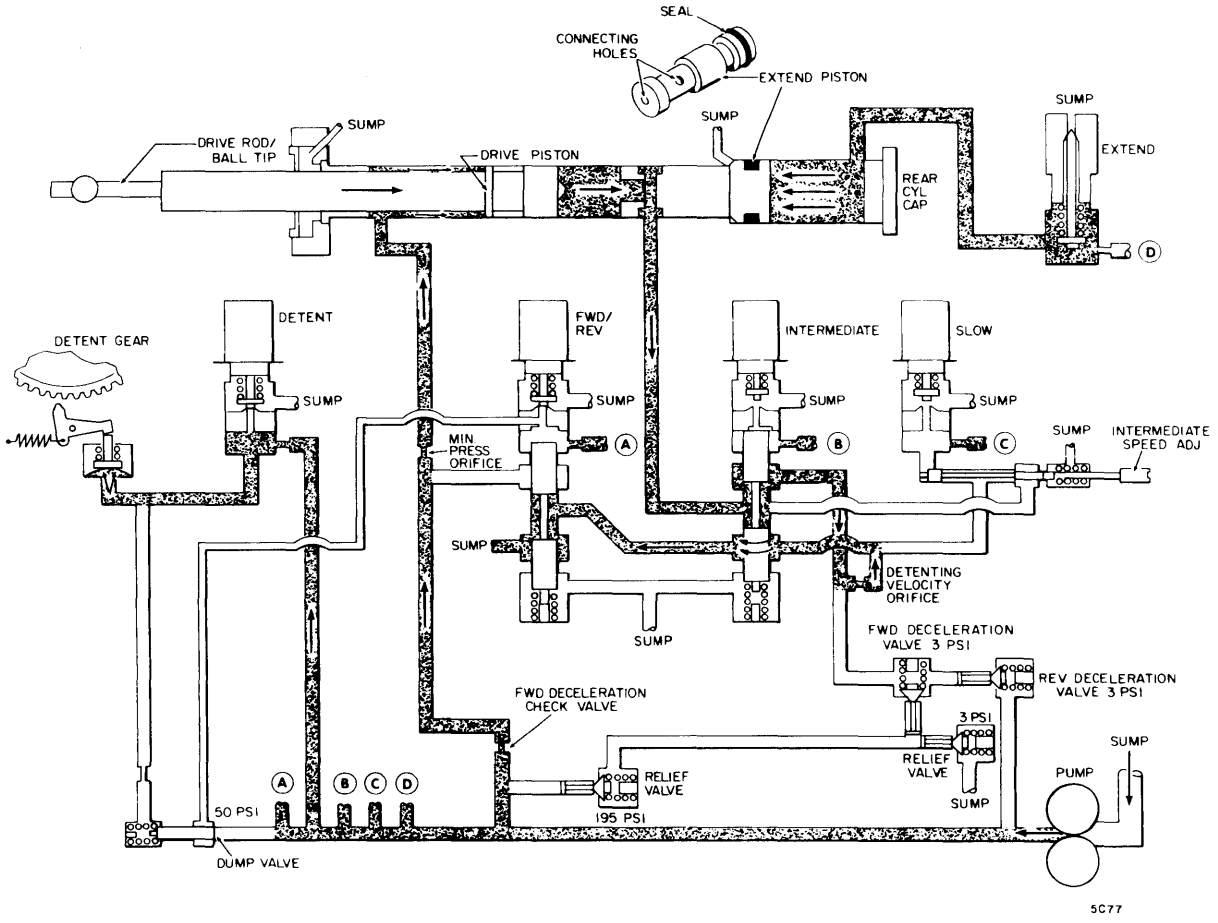

Figure 4-24. Hydraulic Actuator - Reverse Slow

FRAME

The frame assembly consists generally of the structural members, drawer mechanisms, and panels of the cabinet. Two additional subassemblies are, by virtue of their location, considered a part of the frame: blower system and filter box.

Blower System

The blower system (Figure 4-25) provides positive pressure at the center of a disk pack mounted on the spindle of a deck assembly. The presence of this elevated pressure at the center of the disk surfaces results in an outward dispersion of air over each disk surface. This air flow greatly reduces possible contamination and damage of the disks and the read/write heads.

The system consists of a motor driven impeller that forces air through an absolute filter (glass and asbestos) and related ducts upward to the spindles present in the cabinet. Much of the ducting is extendable to allow the deck drawers to be extended out the front and rear of the cabinet. Power to the blower drive motor is controlled by the power supply BLOWER circuit breaker.

Filter Box

The filter box controls power to the cabinet in which it is located. The box is located in the bottom of the cabinet and is accessible by opening the cabinet rear door. It contains a circuit breaker (UNIT POWER) that controls application of main input power to the cabinet power supply. The power supply MAIN POWER indicator monitors the status of the circuit breaker. Frequency filters for the input power lines are mounted inside the box.

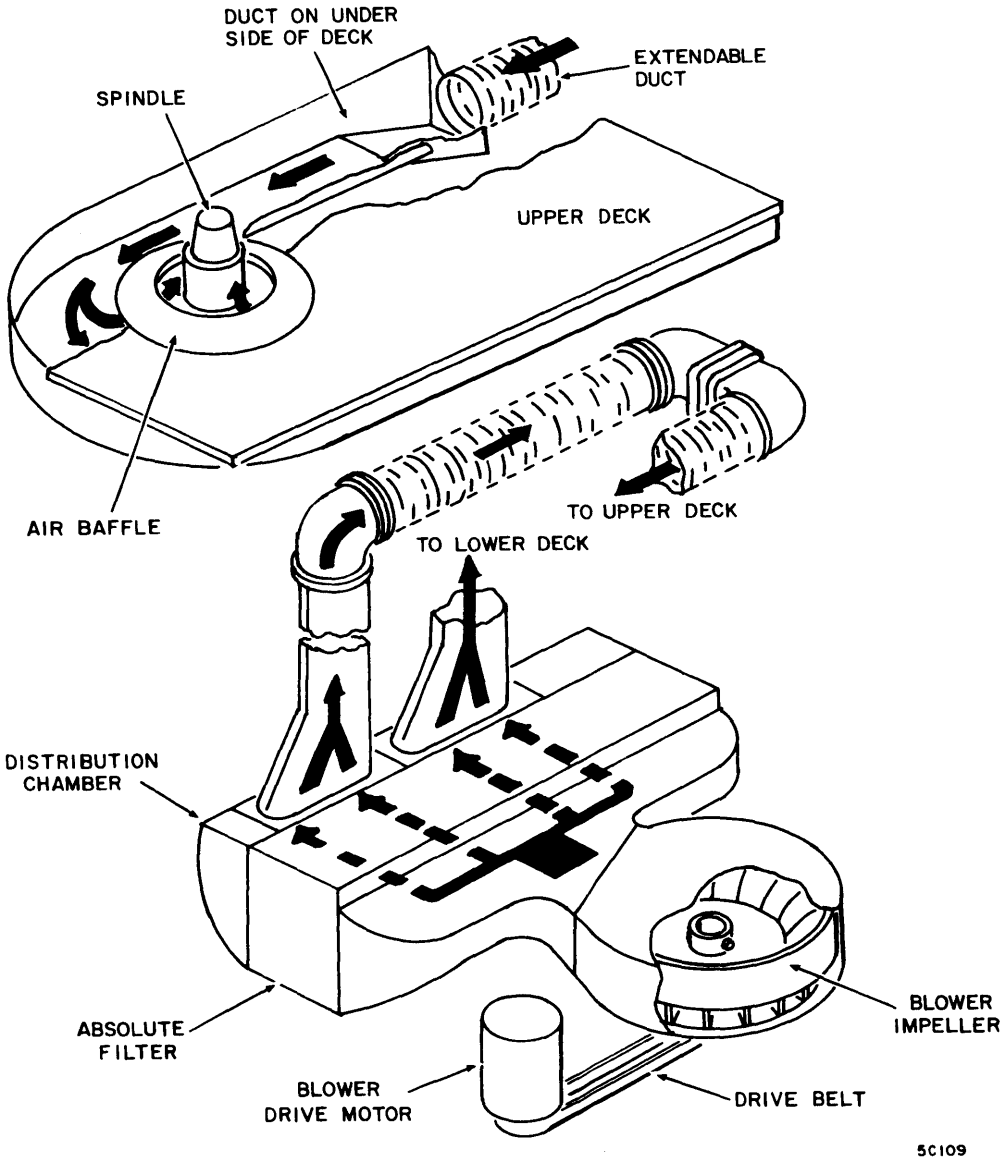

Figure 4-25. Blower System

DISK PACK

The disk pack is the recording medium for the MDD. The disk pack consists of eleven 14-inch, magnetic oxide coated disks center-mounted on a hub. The recording surface of each disk is coated with a layer (0.0002 inch) of magnetic iron oxide and related binders and adhesives.

The 203 recording tracks are located in a 2-inch band near the outer edge of the disk. Track 202 has a diameter of approximately 9 inches, while the diameter of track 00 is about 13 inches. The tracks are spaced 0.010 inch apart.

The top and bottom disk surfaces are covered by protective non-recording disks. The bottom protective disk is called the sector disk. This disk contains notches that are sensed by the index transducer. The pulse outputs of the transducer are used to determine disk pack rpm and to detect organizational segments of the disk pack.

The lower hub of the disk pack contains a replaceable filter. This filter removes particles from the air supplied by the blower. Keeping positive air pressure at the center of the disks reduces the possibility of dust caused damage.

The disk pack has a two-piece container assembly. The bottom cover can be removed simply by grasping and rotating the center hub. The top cover is designed so that it can be removed only by installing the disk pack on the deck spindle assembly. The disk pack can be removed from the spindle only by using the top cover (see Section 2). This design protects the disk pack from physical damage and greatly reduces the possibility of contamination of the disk pack recording surfaces.

SECTION 5

DIAGRAMS

DIAGRAMS

INTRODUCTION

This section contains diagrams that logically describe the MDD in terms of the functions which the unit performs. Figure 5-1 through 5-11 are flow charts, simplified circuits, and timing diagrams that describe the First Seek function, the Power Off sequence, the Direct Seek (forward and reverse) function, the Return to Zero function, and the Read/Write operations. Figure 5-12 shows the cabinet ground scheme.

The logic diagrams for the unit are provided on pages 5-14 through 5-23. The MDD signal distribution drawing is located on page 5-24, and the unit power supply schematic is found on pages 5-25 through 5-26.3. Schematic diagrams for the transducer preamplifier cards and the SPL cards are found at the end of the section.

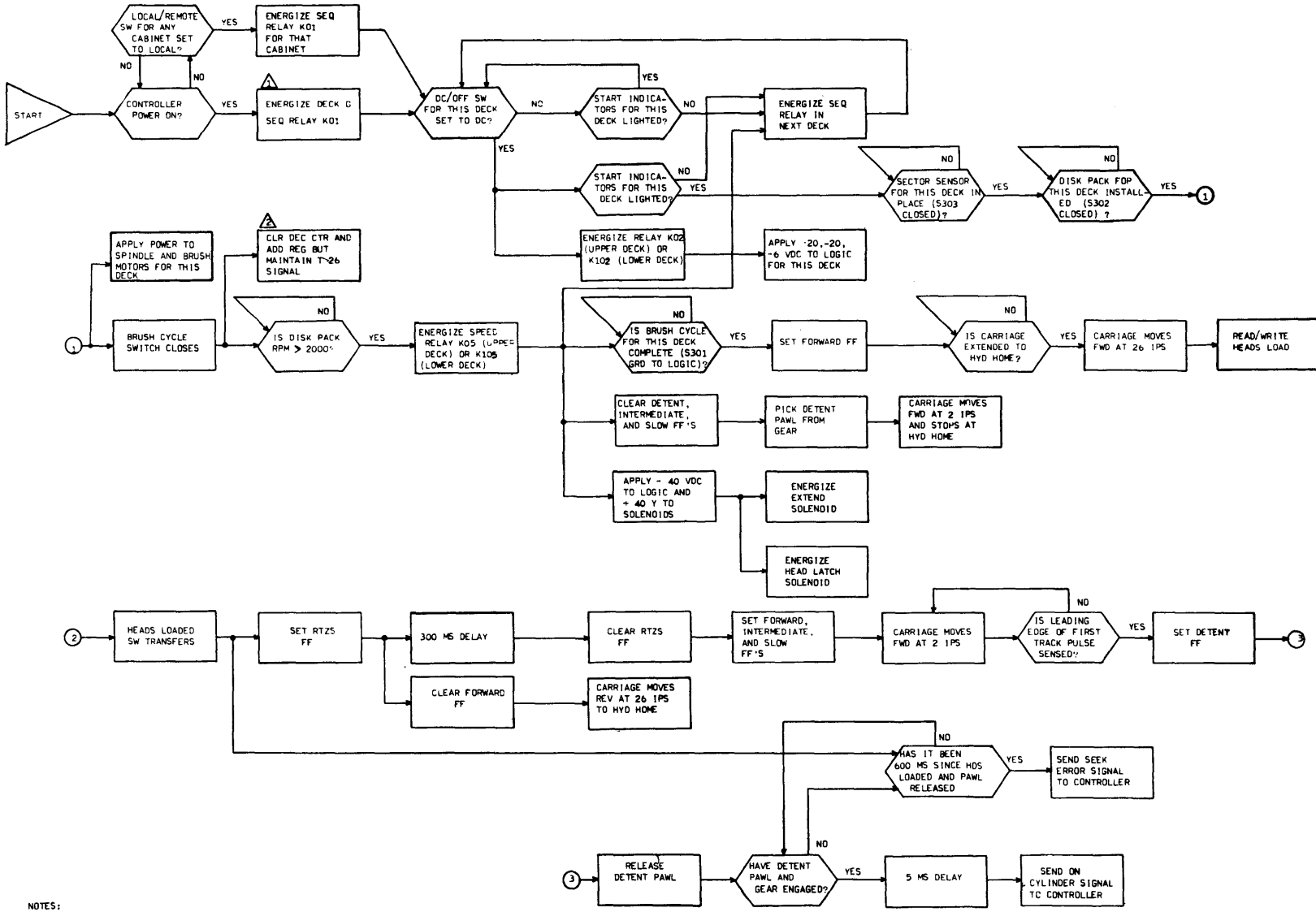

NOTES:

1. DECK 0 DENOTES FIRST DECK CONNECTED TO CONTROLLER VIA POWER SEQUENCE LINES.
2. THIS CONDITION MAINTAINED BY MTR OFF OR HDS UNLD OR SPEED OR RTZS SIGNALS.

Figure 5-1. Power On/First Seek Sequence

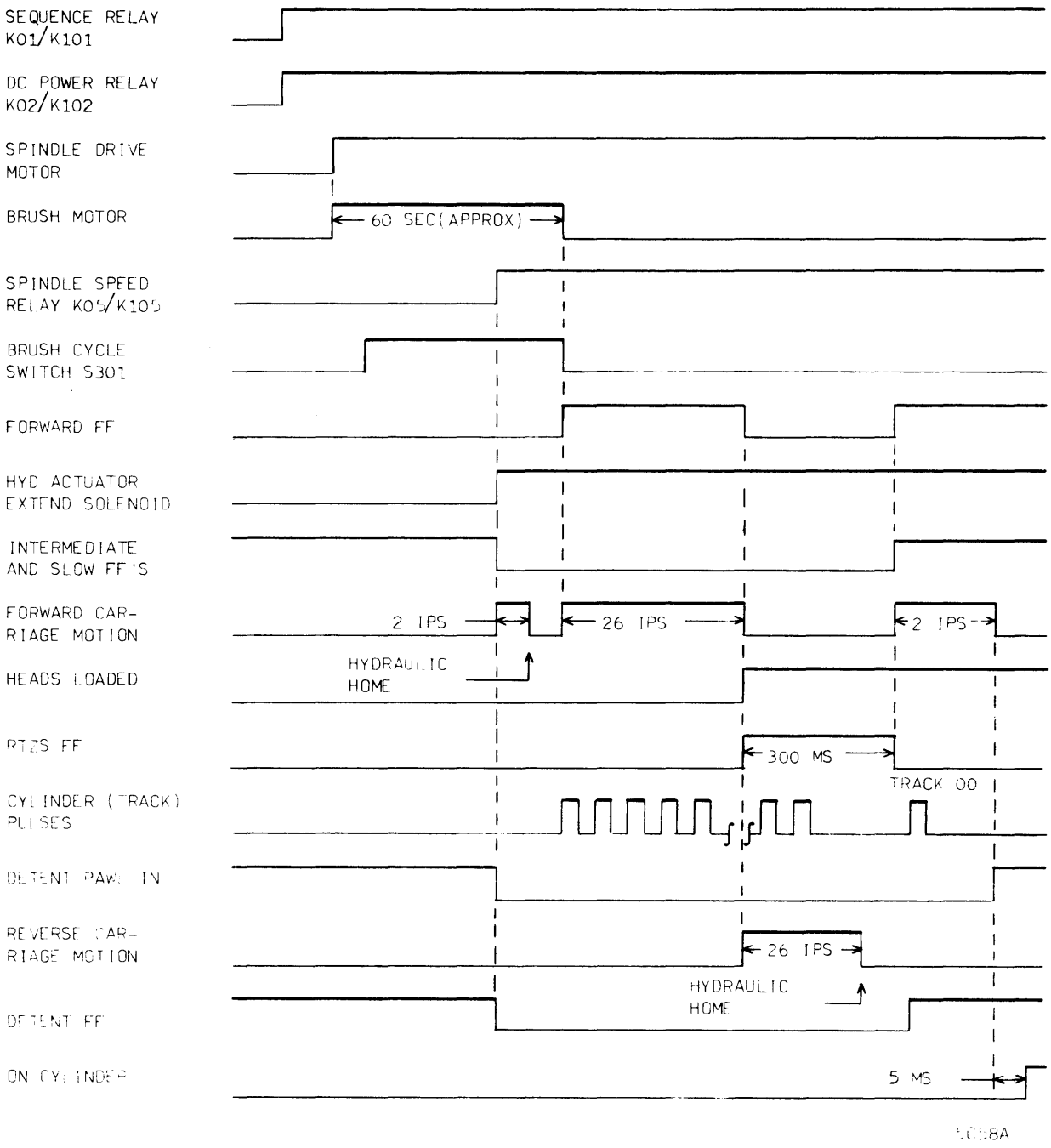

Figure 5-2. Power On/First Seek Timing

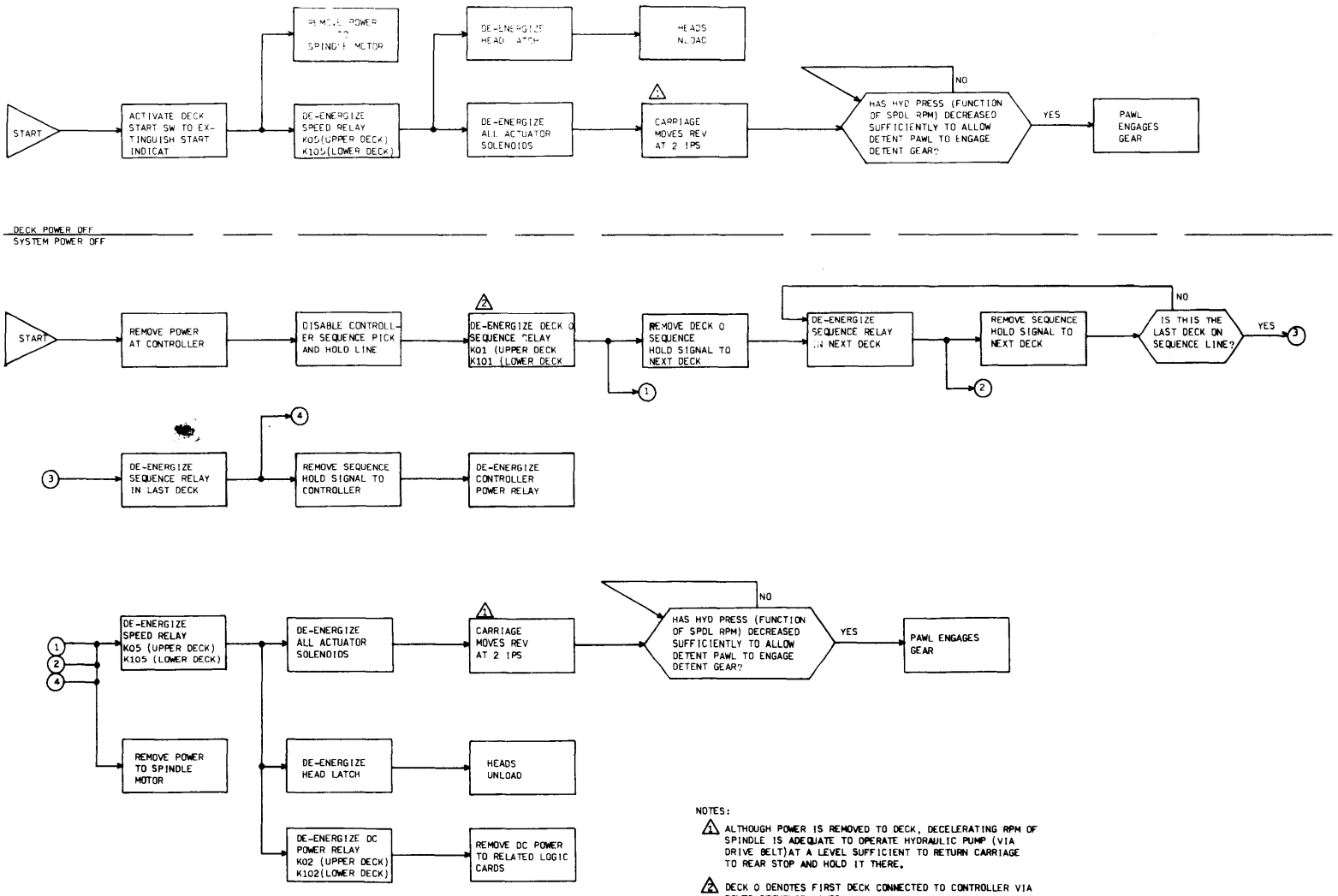

Figure 5-3. Deck or System Power Off Sequence

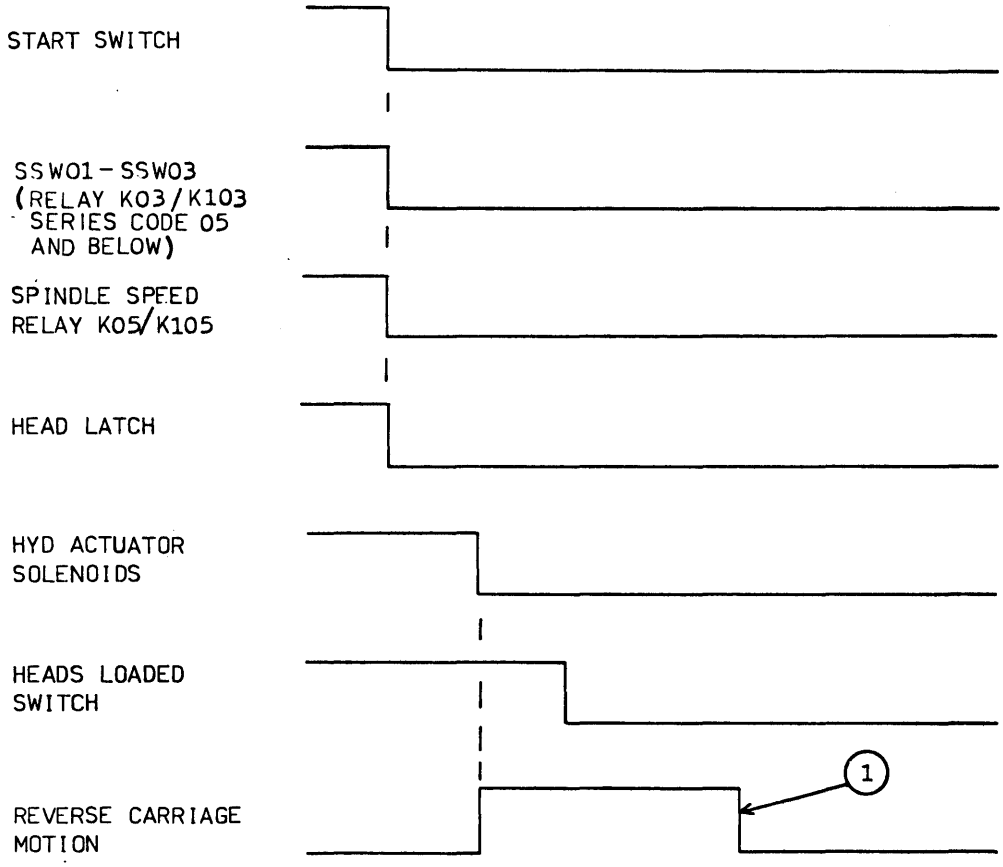

NOTE:

(1) CARRIAGE ENCOUNTERS REVERSE POSITIVE STOP. RESIDUAL HYDRAULIC PRESSURE HOLDS CARRIAGE IN THIS POSITION. DETENT PAWL SPRING OVERRIDES FADING PRESSURE TO PULL PAWL INTO DETENT GEAR.

Figure 5-4. Power-Off Timing

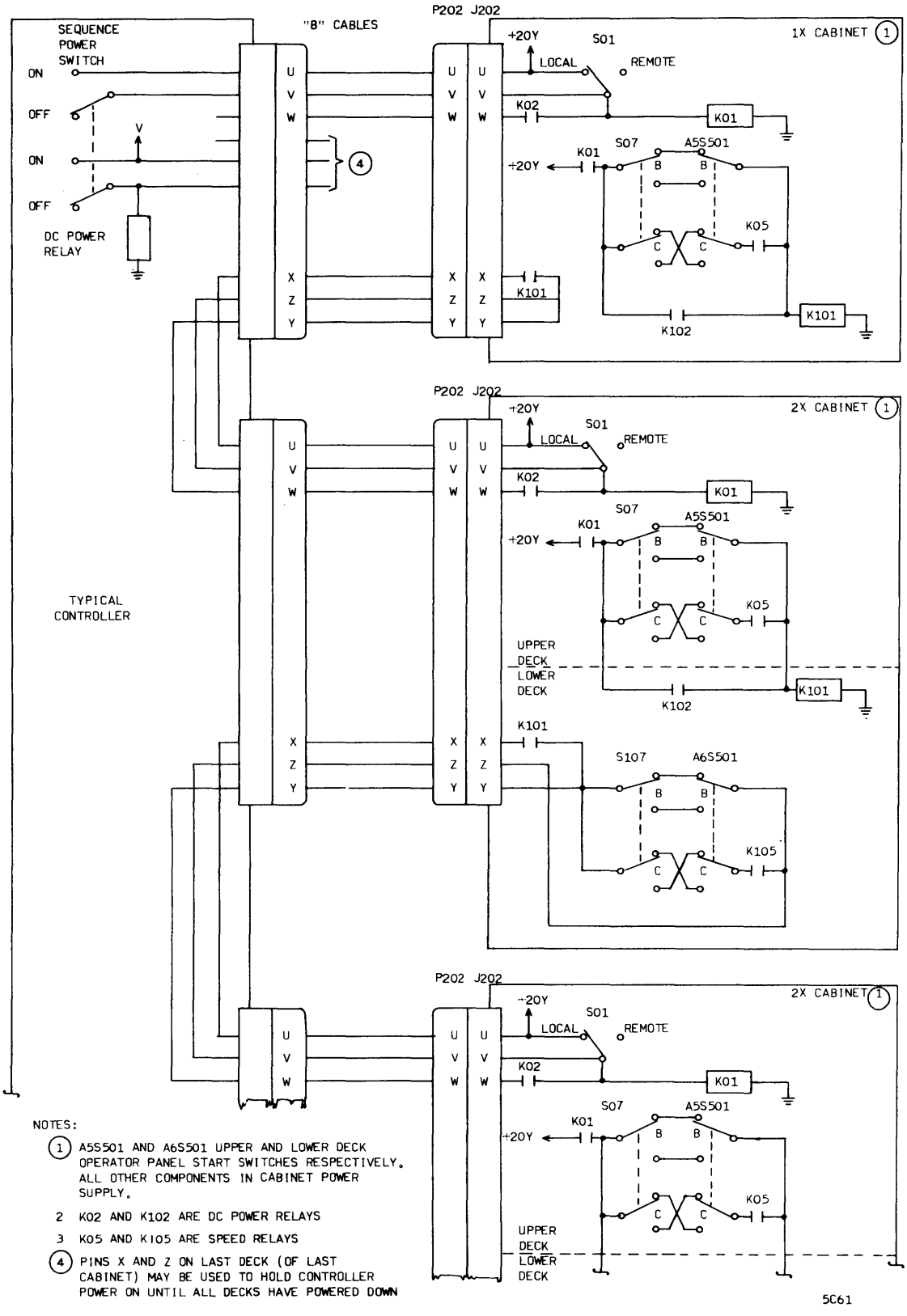

Figure 5-5. System Power Sequence Lines

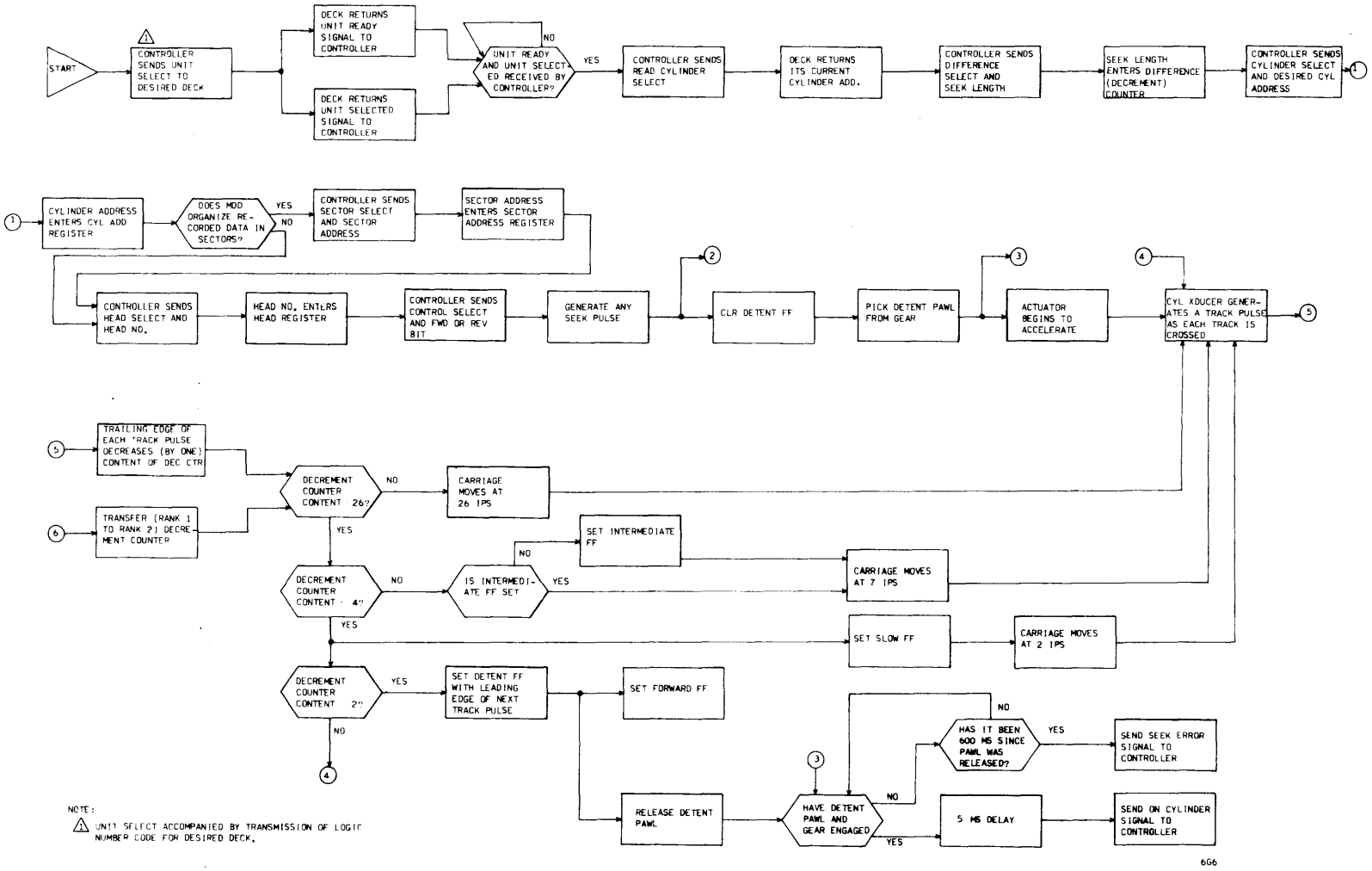

Figure 5-6. Direct Seek Sequence

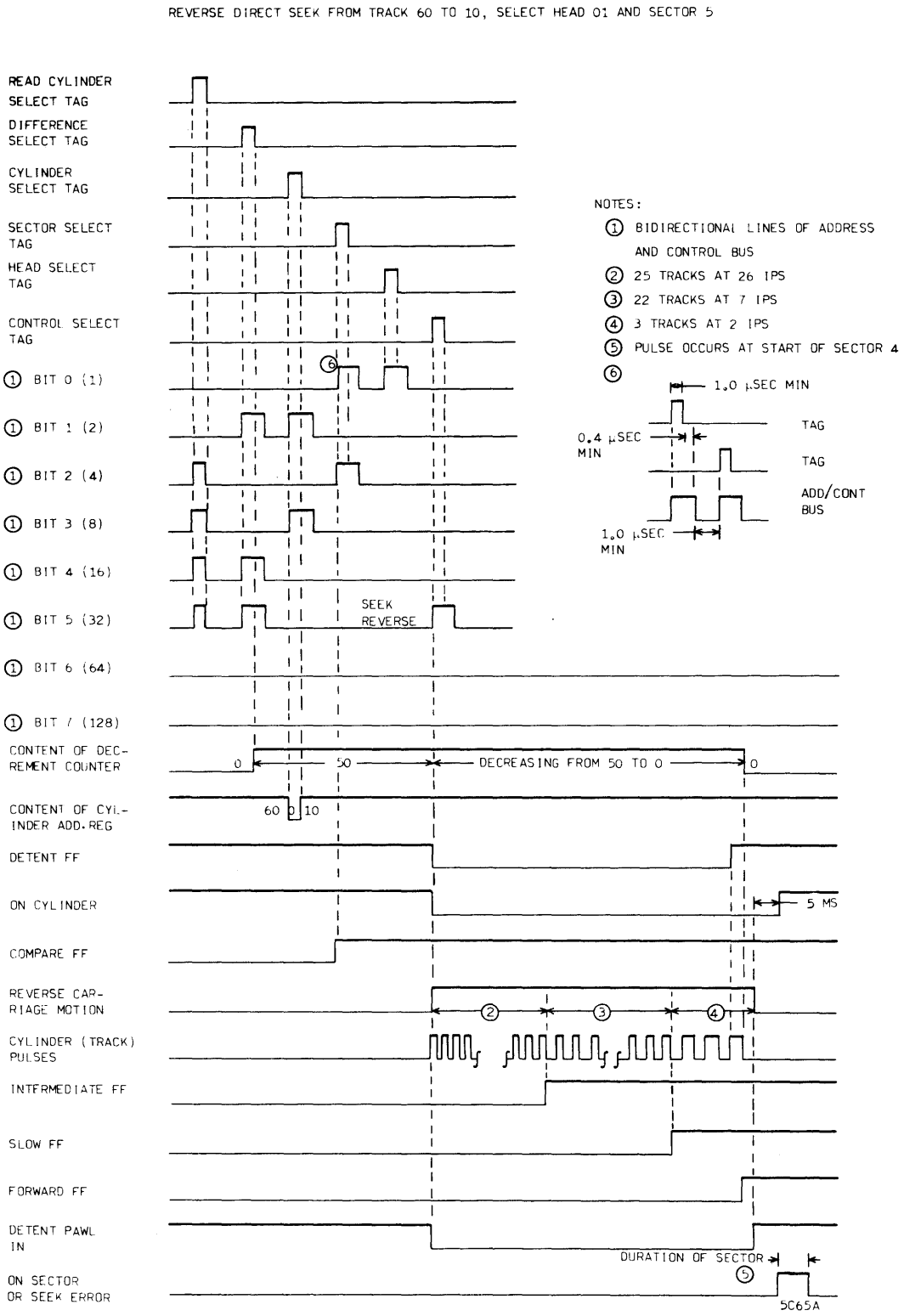

Figure 5-7. Direct Seek Timing

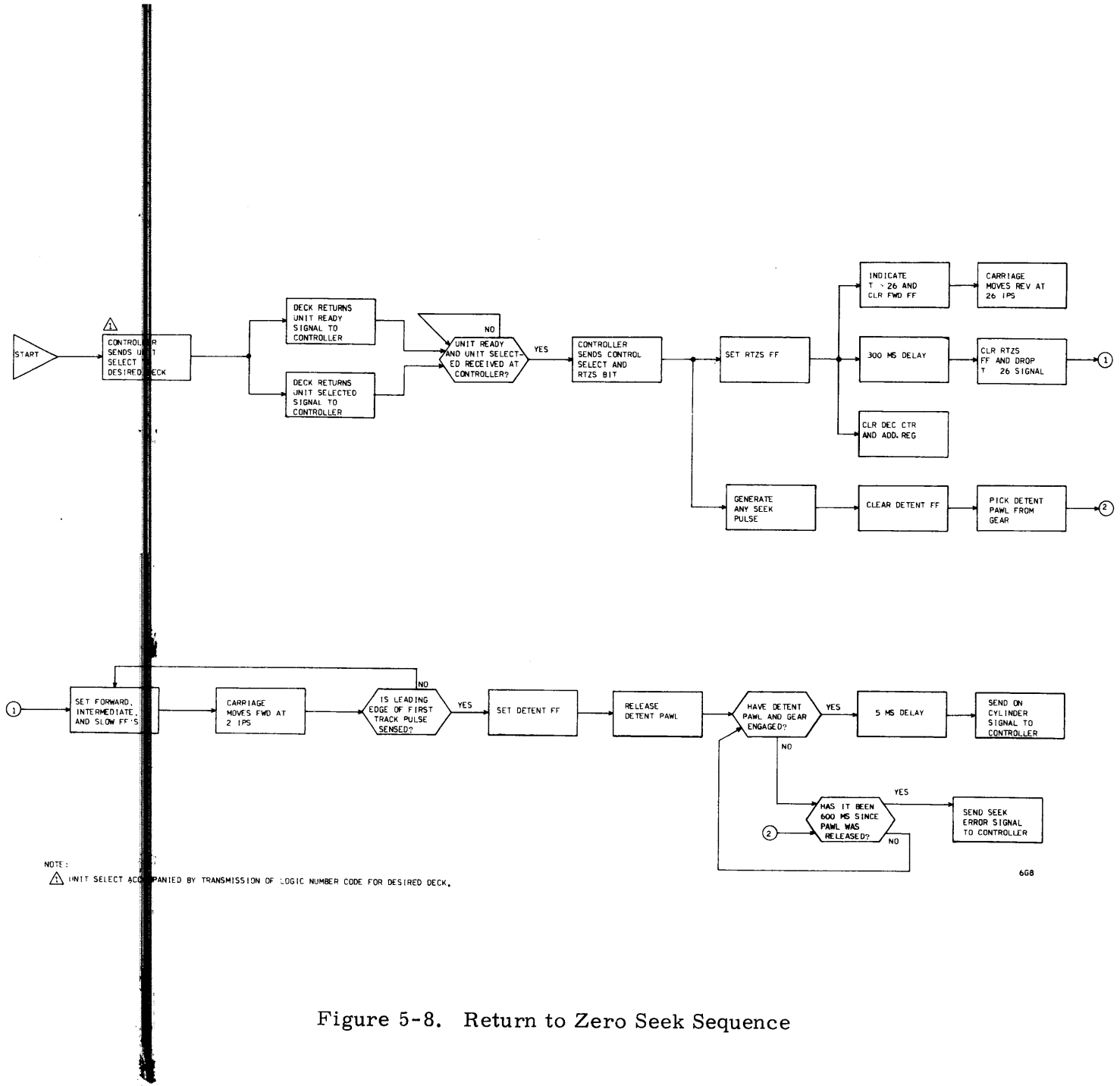

Figure 5-8. Return to Zero Seek Sequence

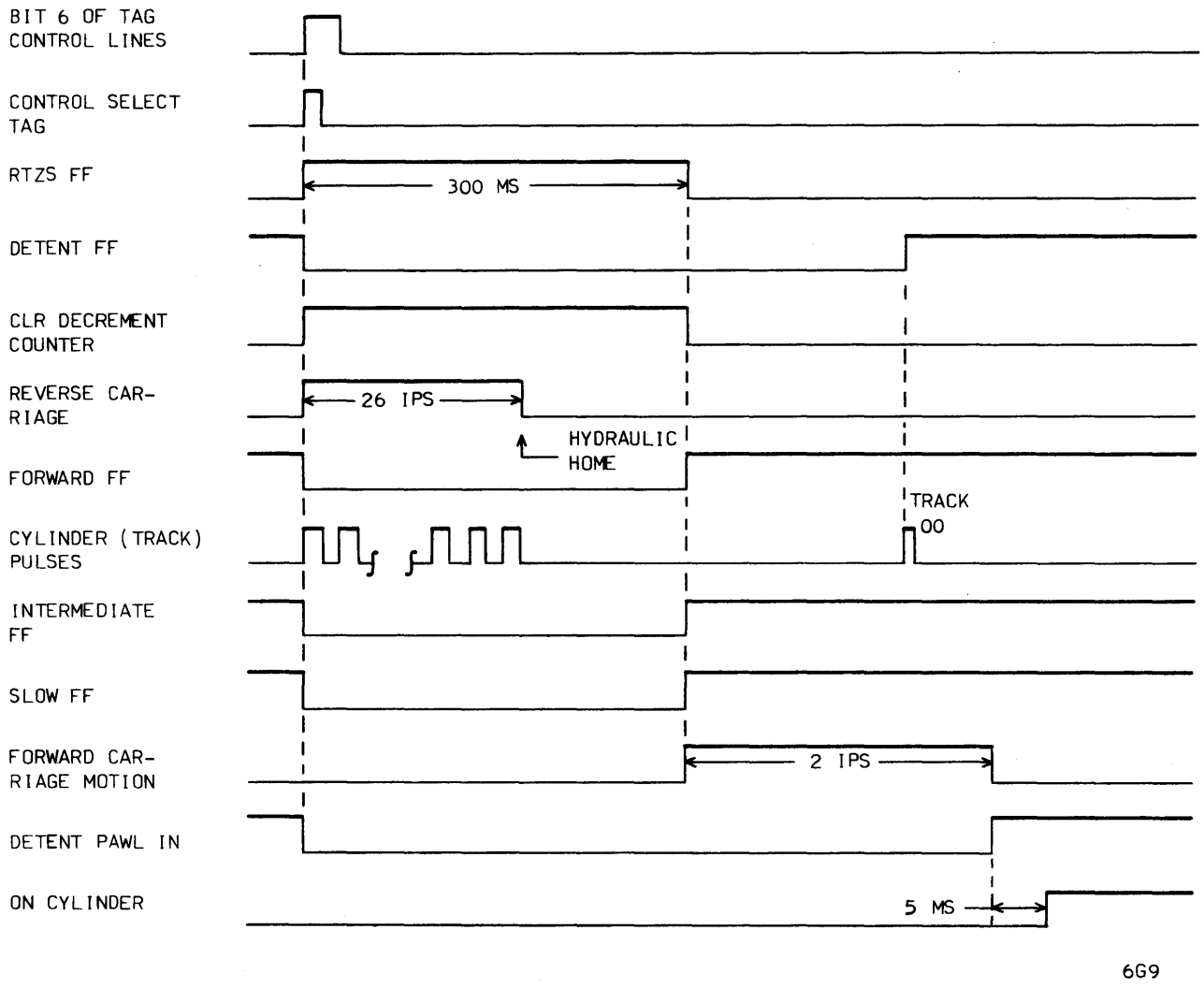

Figure 5-9. Return to Zero Seek Timing

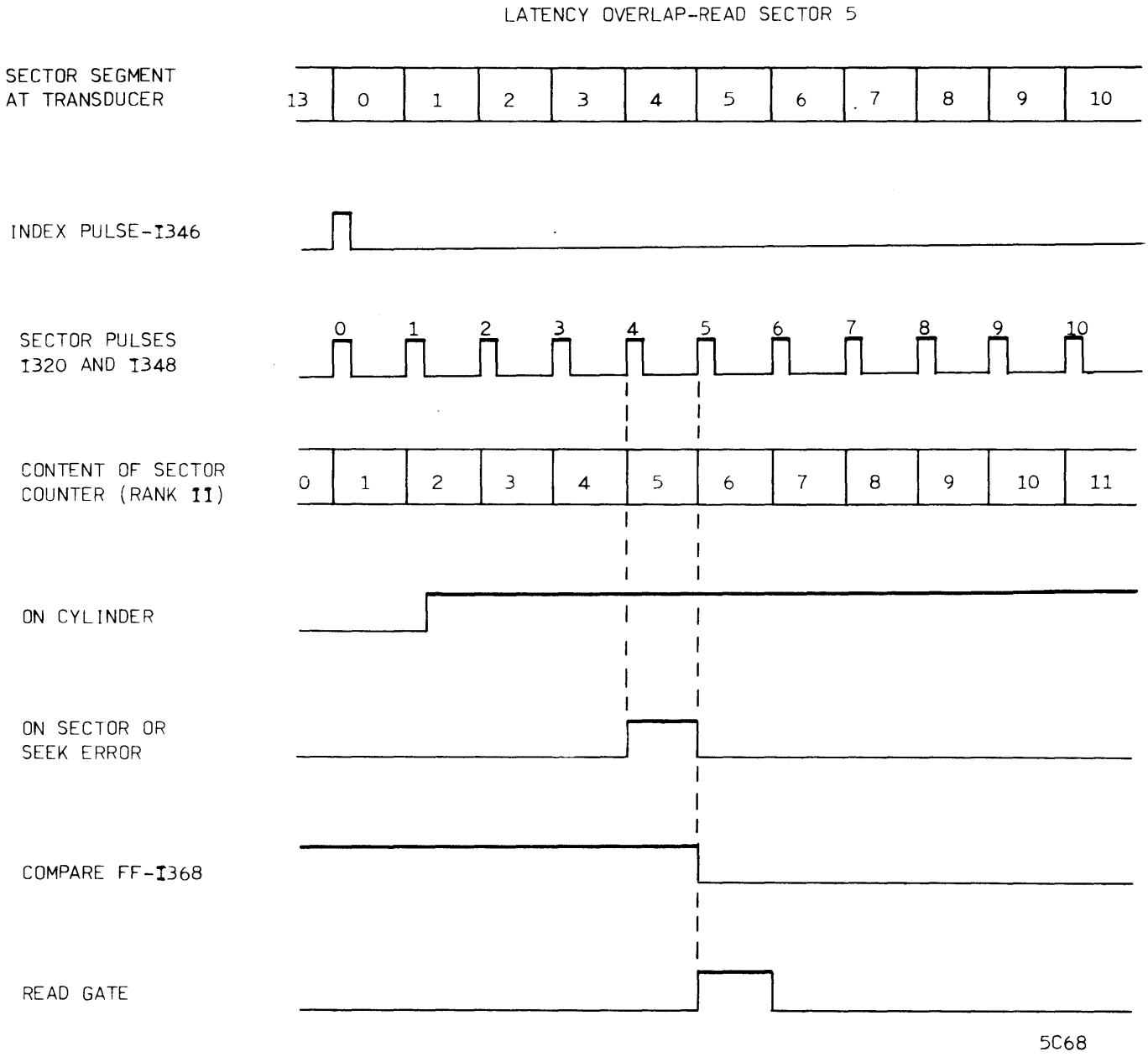

Figure 5-10. Latency Overlap Timing

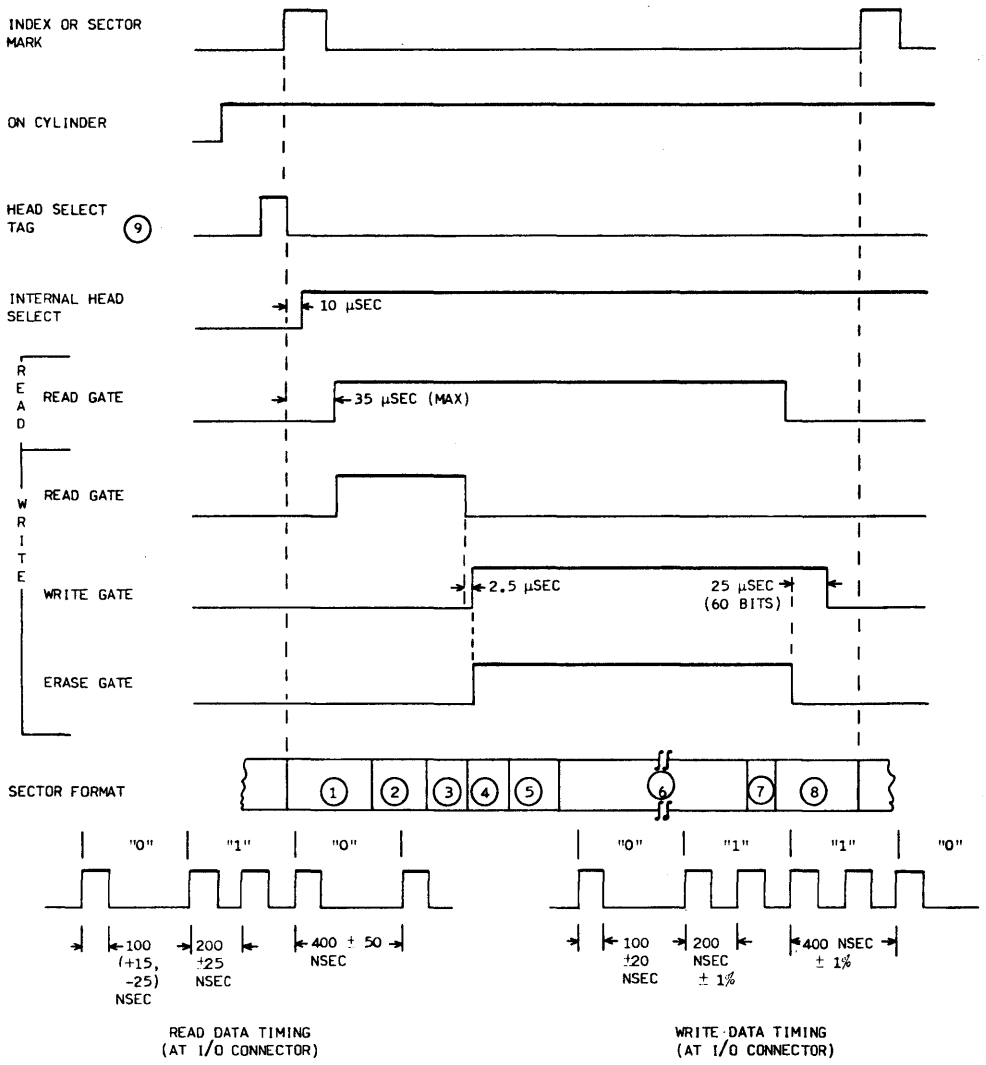

NOTES:

(1) TOLERANCE GAP 1 - 120 BITS - ACCOMODATES PHYSICAL READ/WRITE TO ERASE GAP DISTANCE AND ALLOWS HEAD SWITCHING AND READ AMPLIFIER STABILIZATION TIME.

(2) SYNC PATTERN 1 - 112 BITS - INDICATES BEGINNING OF ADDRESS AREA. CONTROLLER MUST INITIATE SYNC BYTE (OR BIT) SEARCH MIDWAY THROUGH THIS PATTERN (REQUIRED TO ENSURE THAT HEAD IS READING A KNOWN PATTERN EVEN UNDER WORST-CASE CONDITIONS OF HEAD SKEW, RPM, AND INDEX TOLERANCES DUE TO DISK PACK INTERCHANGE).

(3) ADDRESS - 36 BITS (TYPICAL) - TWELVE-BIT UPPER ADDRESS, 12-BIT LOWER ADDRESS, AND 12-BIT CHECKWORD.

(4) HEAD GAP - 120 BITS - ACCOMMODATES PHYSICAL READ/WRITE TO ERASE GAP DISTANCE.

(5) SYNC PATTERN 2 - 72 BITS - INDICATES BEGINNING OF DATA FIELD.

(6) DATA FIELD - 3864 BITS PLUS 12 BIT CHECKWORD.

(7) POST AMBLE - 1 BIT -A PAD TO ENSURE THAT LAST BIT OF DATA IS NOT DESTROYED OR DISTORTED.

(8) TOLERANCE GAP 2 - 127 BITS - COMPENSATES FOR WORST-CASE CONDITIONS OF SPINDLE SPEED AND OSCILLATOR TOLERANCES.

(9) HEAD SELECT TAG LINE SHOWN OCCURRING AT LATEST ACCEPTABLE TIME RELATIVE TO INDEX OR SECTOR MARK; NOT TO BE CONSIDERED A TYPICAL RELATIONSHIP.

5C70

Figure 5-11. Typical Sector Format Read/ Write Timing

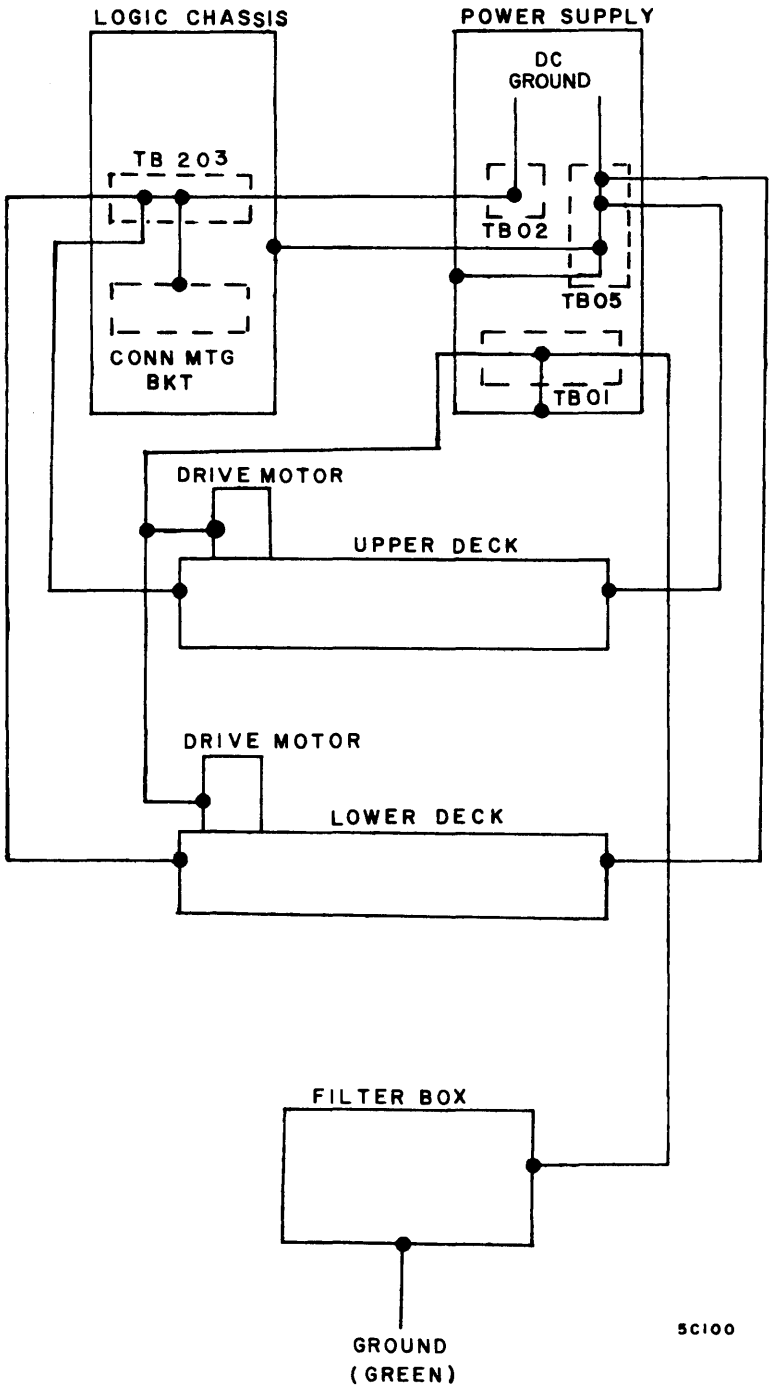

Figure 5-12. Ground Scheme

DISCRETE COMPONENT

DISCRETE COMPONENT CIRCUIT INFORMATION EXAMPLE

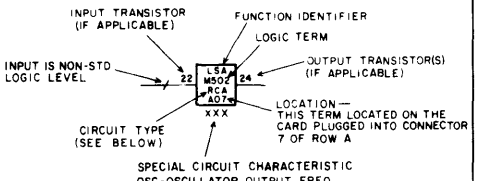

DISCRETE COMPONENT CIRCUIT TYPES:

FAB	LO LEVEL AMPL
GJA	ANALOG GATE
HA-	HI LEVEL AMPL
HJA	ANALOG LINE DRIVER
IAA, IBA, ICA	LAMP DRIVER
IDA	SOLENOID DRIVER
JAB	WRITE DRIVER
JBB	ERASE DRIVER
LAA	LINE XMTR
MAA	OSCILLATOR
MBA	WAVEFORM GENERATOR
QAA, QBA, QCA, QF-	QUANTIZING DETECTOR
QDA	SPEED DETECTOR
QEA	VOLTAGE "OR"
RAA, RBA	LINE RCVR
RCA, RDA	SWITCH RCVR
RFA	TERMINATED RCVR
U--	DELAY
VAA, VAC	"AND"
VAB, VJ-	SPECIAL AND/OR
WB-	FLIP-FLOP
XA-	PULSE SHAPER

GENERAL

EXCEPT FOR SHEET 2, THESE SHEETS SHOW THE LOGIC REQUIRED TO SUPPORT A SINGLE SPINDLE (DRAWN FOR AN UPPER SPINDLE) SHEET 2 SHOWS I/O LOGIC FOR BOTH SPINDLES

LOGIC CARD LOCATIONS / RELATIONS

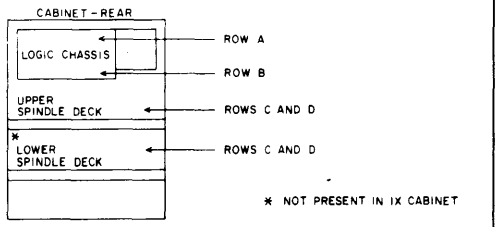

* NOT PRESENT IN IX CABINET

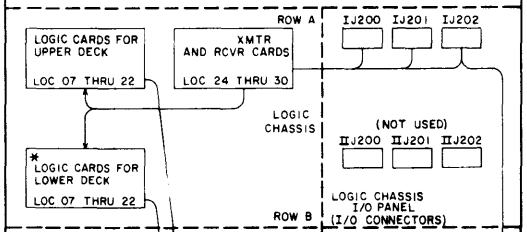

GENERAL SYMBOLOGY

REMOTE ON-SHEET CONNECTIONS

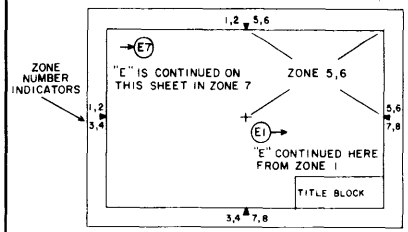

ODD NUMBERS USED TO DESIGNATE ZONES DURING FIRST PASS THRU ALPHABET. EVEN NUMBERS USED ONLY IF CONNECTIONS EXCEED 24 (I AND O NOT USED).

CONNECTORS AND JUNCTIONS

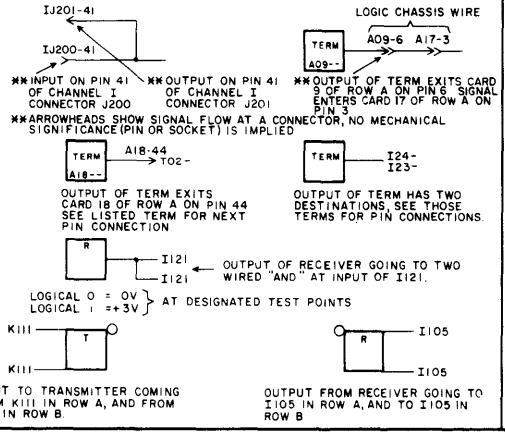

INTEBRID

INTEBRID CIRCUIT INFORMATION EXAMPLE

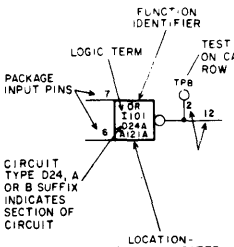

INTEBRID CIRCUIT PACKAGE IDENTIFICATION (TOP VIEW)

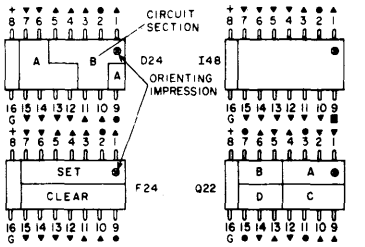

KEY

- ▼ 7 INPUT PIN (7)
- ▲ 15 OUTPUT PIN (15)
- ■ UNUSED
- ● COLLECTOR (TEST POINT)
- \+ +6V APPLICATION PIN
- G GROUND

INTEBRID SYMBOLS

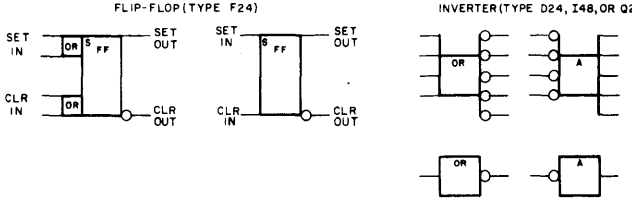

UNUSED INTEBRID CIRCUIT INPUTS AND OUTPUTS ARE NOT SHOWN ON THE LOGIC DIAGRAMS. IF A GATE HAS ONLY ONE INPUT, THE GATE HAS NO LOGICAL SIGNIFICANCE AND IS NOT SHOWN.

EXAMPLES

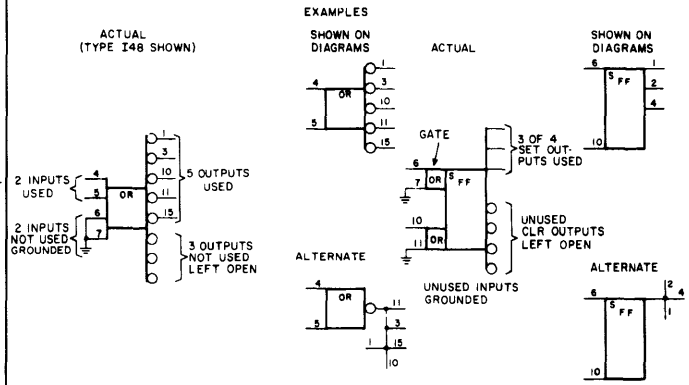

CONTROL DATA DEVELOPMENT DIVISION	TITLE: KEY TO LOGIC SYMBOLS	EQUIPMENT: BM101, BM103	
		SIZE C	DRAWING NO. 40091400
		REV. A	
		SHEET 1	PAGE

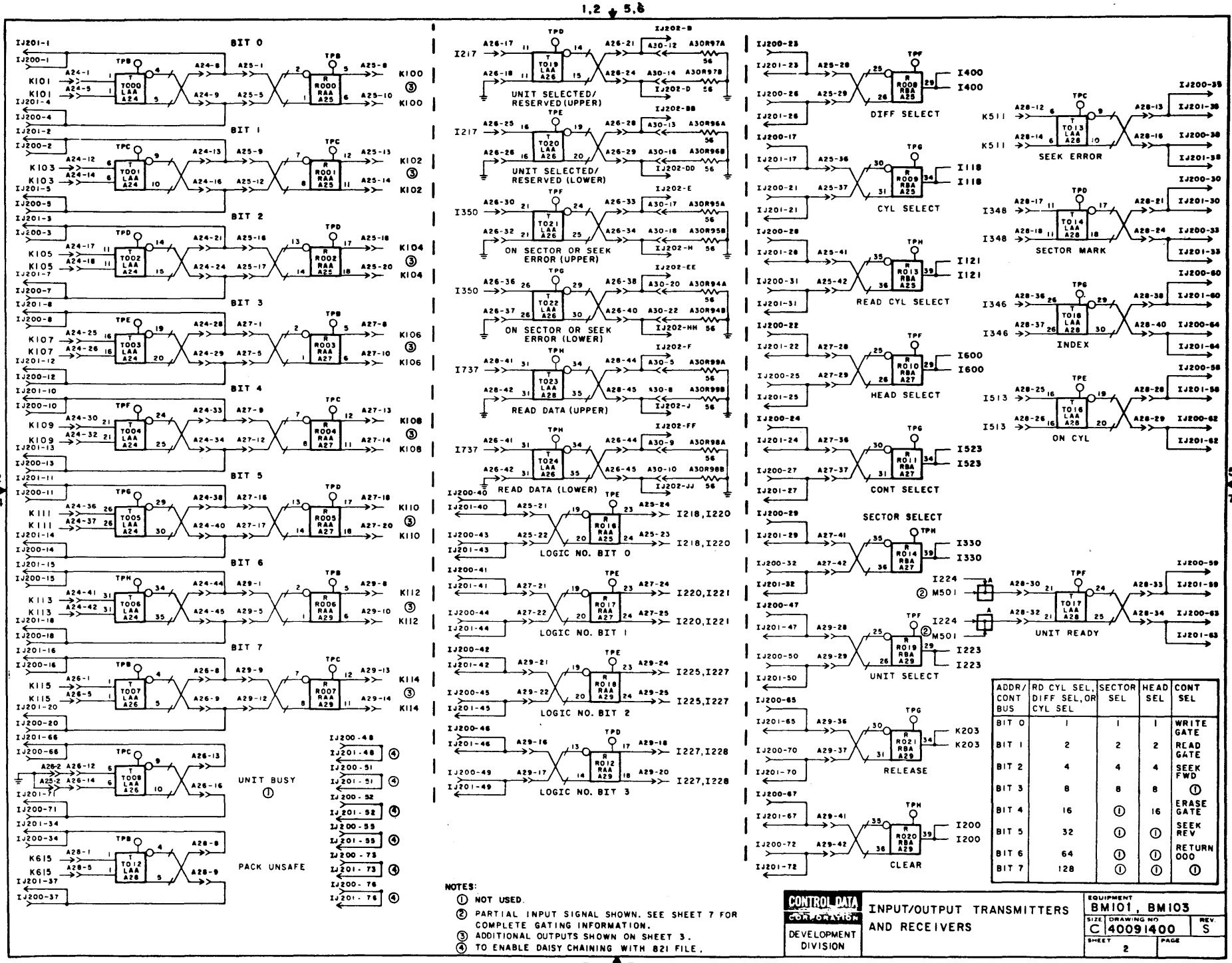

ADDR/ CONT BUS	RD CYL SEL, DIFF SEL, OR CYL SEL	SECTOR SEL	HEAD SEL	CONT SEL
BIT 0	1	1	1	WRITE GATE
BIT 1	2	2	2	READ GATE
BIT 2	4	4	4	SEEK FWD
BIT 3	8	8	8	①
BIT 4	16	①	16	ERASE GATE
BIT 5	32	①	①	SEEK REV
BIT 6	64	①	①	RETURN 000
BIT 7	128	①	①	①

NOTES:
① NOT USED.
② PARTIAL INPUT SIGNAL SHOWN. SEE SHEET 7 FOR COMPLETE GATING INFORMATION.
③ ADDITIONAL OUTPUTS SHOWN ON SHEET 3.
④ TO ENABLE DAISY CHAINING WITH 821 FILE.

CONTROL DATA CORPORATION
DEVELOPMENT DIVISION

INPUT/OUTPUT TRANSMITTERS AND RECEIVERS

EQUIPMENT BM101, BM103
SIZE C | DRAWING NO 40091400 | REV S
SHEET 2 | PAGE

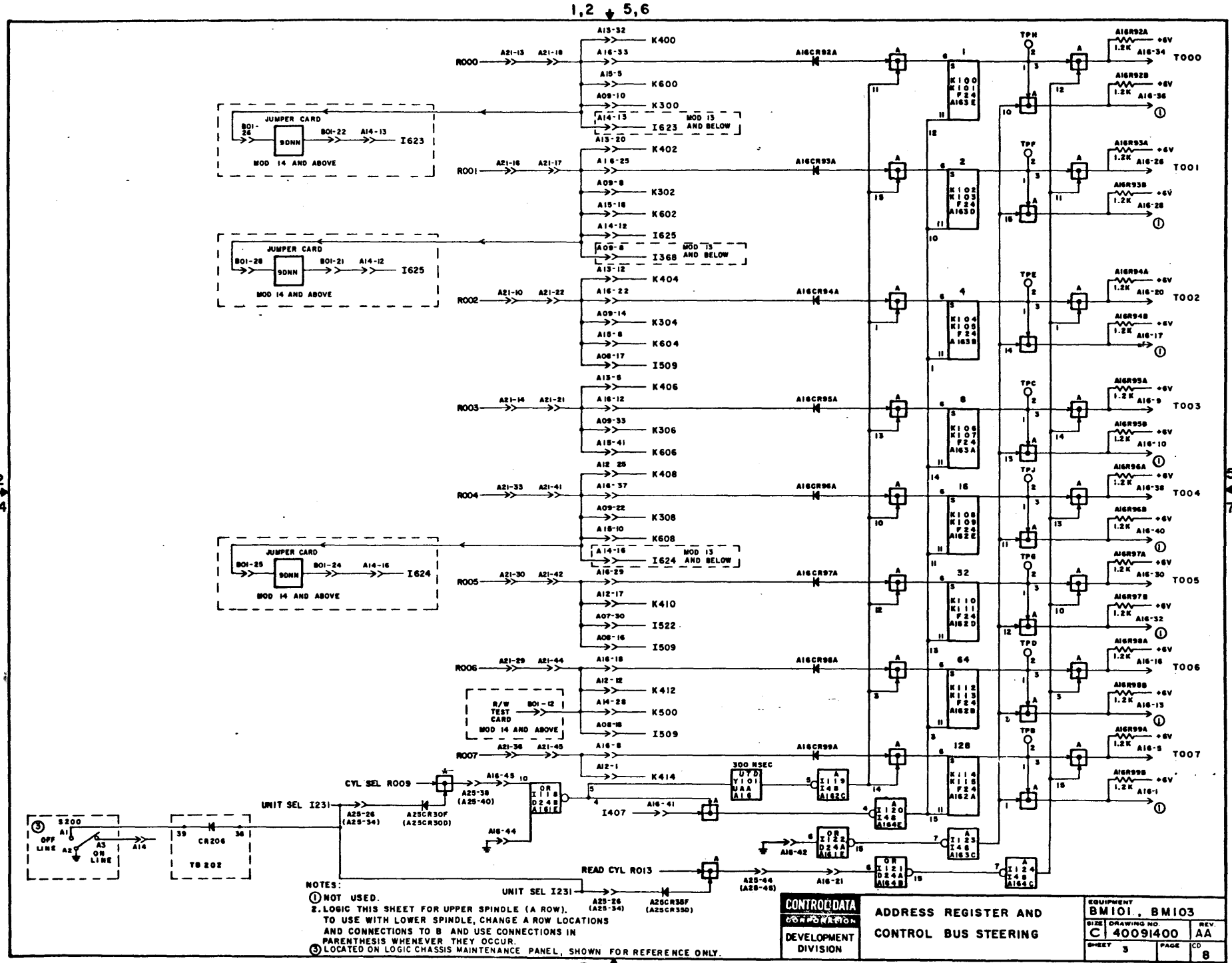
1,2 5,6
3,4 7,8
R000
R001
R002
R003
R004
R005
R006
R007
A16CR92A
A16CR93A
A16CR94A
A16CR95A
A16CR96A
A16CR97A
A16CR98A
A16CR99A
T000
T001
T002
T003
T004
T005
T006
T007
TPH
TPF
TPE
TPC
TPJ
TPG
TPD
TPB
JUMPER CARD
MOD 14 AND ABOVE
MOD 13 AND BELOW
I623
I625
I624
I368
I509
I522
I407
R/W TEST CARD
CYL SEL R009
UNIT SEL I231
READ CYL R013
300 NSEC
S200
CR206
TB 202
ON LINE
OFF LINE
NOTES:
① NOT USED.
2. LOGIC THIS SHEET FOR UPPER SPINDLE (A ROW). TO USE WITH LOWER SPINDLE, CHANGE A ROW LOCATIONS AND CONNECTIONS TO B AND USE CONNECTIONS IN PARENTHESIS WHENEVER THEY OCCUR.
⑤ LOCATED ON LOGIC CHASSIS MAINTENANCE PANEL, SHOWN FOR REFERENCE ONLY.
CONTROL DATA CORPORATION
DEVELOPMENT DIVISION
ADDRESS REGISTER AND CONTROL BUS STEERING
EQUIPMENT BM101, BM103
SIZE C
DRAWING NO. 40091400
REV. AA
SHEET 3
PAGE
CD 8

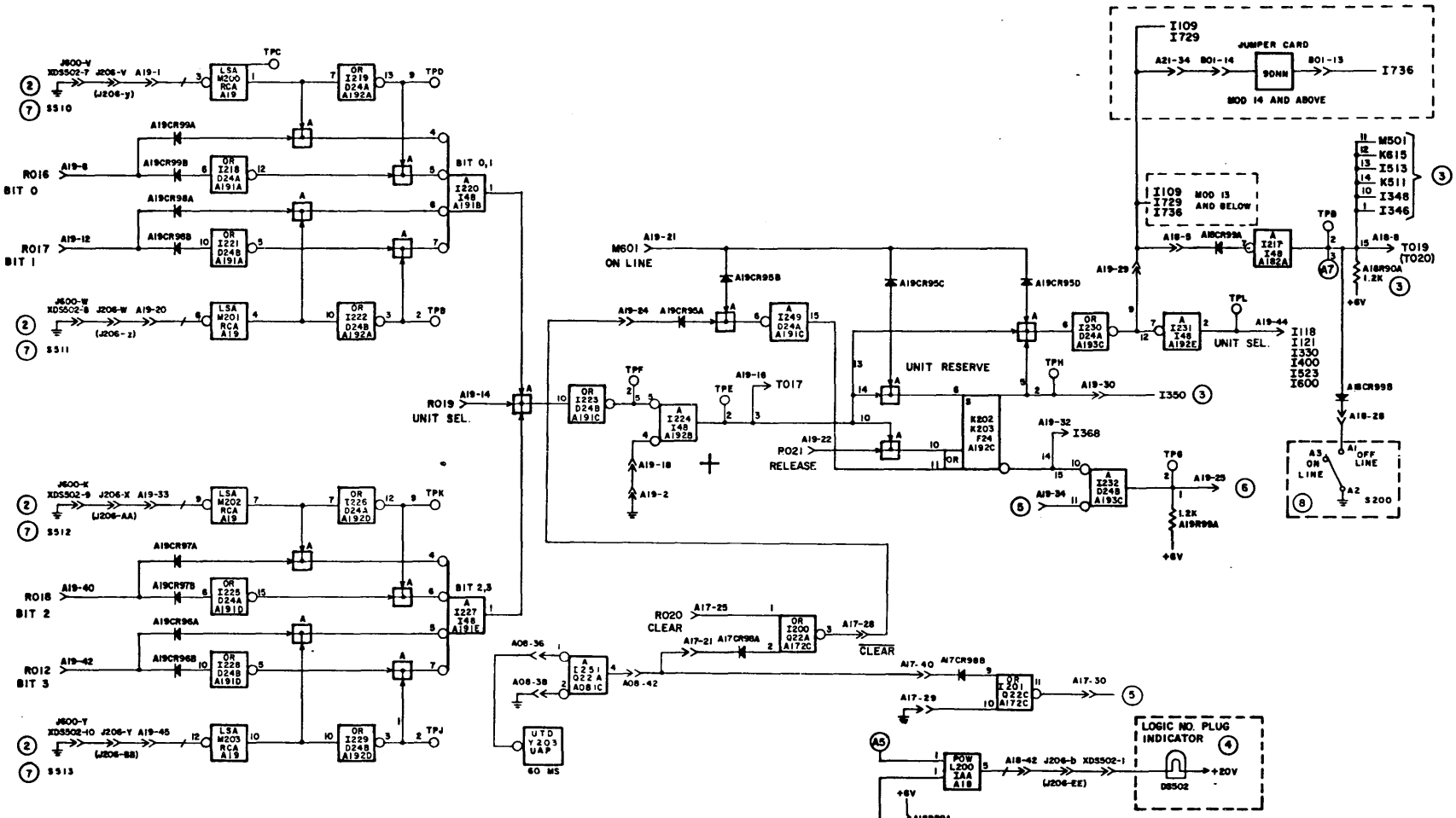

NOTES:

1. LOGIC THIS SHEET FOR UPPER SPINDLE (A ROW). TO USE WITH LOWER SPINDLE, CHANGE A ROW LOCATIONS AND CONNECTIONS TO B AND USE TERM NUMBERS AND CONNECTIONS IN PARENTHESIS WHEREVER THEY OCCUR.
2. ELECTRICAL PLUG GROUNDS ARE ENABLE BY THE INSERTION OF THE ELECTRICAL LOGIC NO. PLUG. LOGIC NO. OF PLUG DETERMINES GROUNDS ACCORDING TO SHORTED PINS SHOWN IN ADJACENT TABLE. THIS UNIT SHOWN WITH LOGIC NO. " 0 " PLUG INSTALLED AT OPR CONTROL PANEL.
3. THIS SIGNAL FORMS WIRED AND GATE WITH THE OUTPUT OF LISTED TERM(S). GATE(S) IS SHOWN ON SAME SHEET AS LISTED TERM.
4. LOCATED ON OPERATOR PANEL. SHOWN FOR REFERENCE ONLY.
5. CIRCUIT OPEN
6. NOT USED
7. MECHANICAL PLUG GROUNDS ARE ENABLE BY THE INSERTION OF THE MECHANICAL LOGIC PLUG. THE NO. OF THE LOGIC PLUG DETERMINES GROUNDS ACCORDING TO CLOSED SWITCHES SHOWN IN ADJACENT TABLE THIS UNIT SHOWN WITH LOGIC NO "0" PLUG INSTALLED AT OPR CONTROL PANEL.
8. LOCATED ON LOGIC CHASSIS MAINTENANCE PANEL, SHOWN FOR REFERENCE ONLY.

(2)

LOGIC NO.	SHORTED PINS
0	7,8,9,10
1	8,9,10
2	7, 9,10
3	9,10
4	7,8, 10
5	8, 10
6	7, 10
7	10
8	7,8,9

(7)

LOGIC NO.	OPEN = O CLOSED=C S513	S512	S511	S510
0	C	C	C	C
1	C	C	C	O
2	C	C	O	C
3	C	C	O	O
4	C	O	C	C
5	C	O	C	O
6	C	O	O	C
7	C	O	O	O
8	O	C	C	C

CONTROL DATA — DEVELOPMENT DIVISION

SELECT AND RESERVE

EQUIPMENT BM101, BM103

SIZE C | DRAWING NO. 40091400 | REV. AA

SHEET 4 | PAGE 8

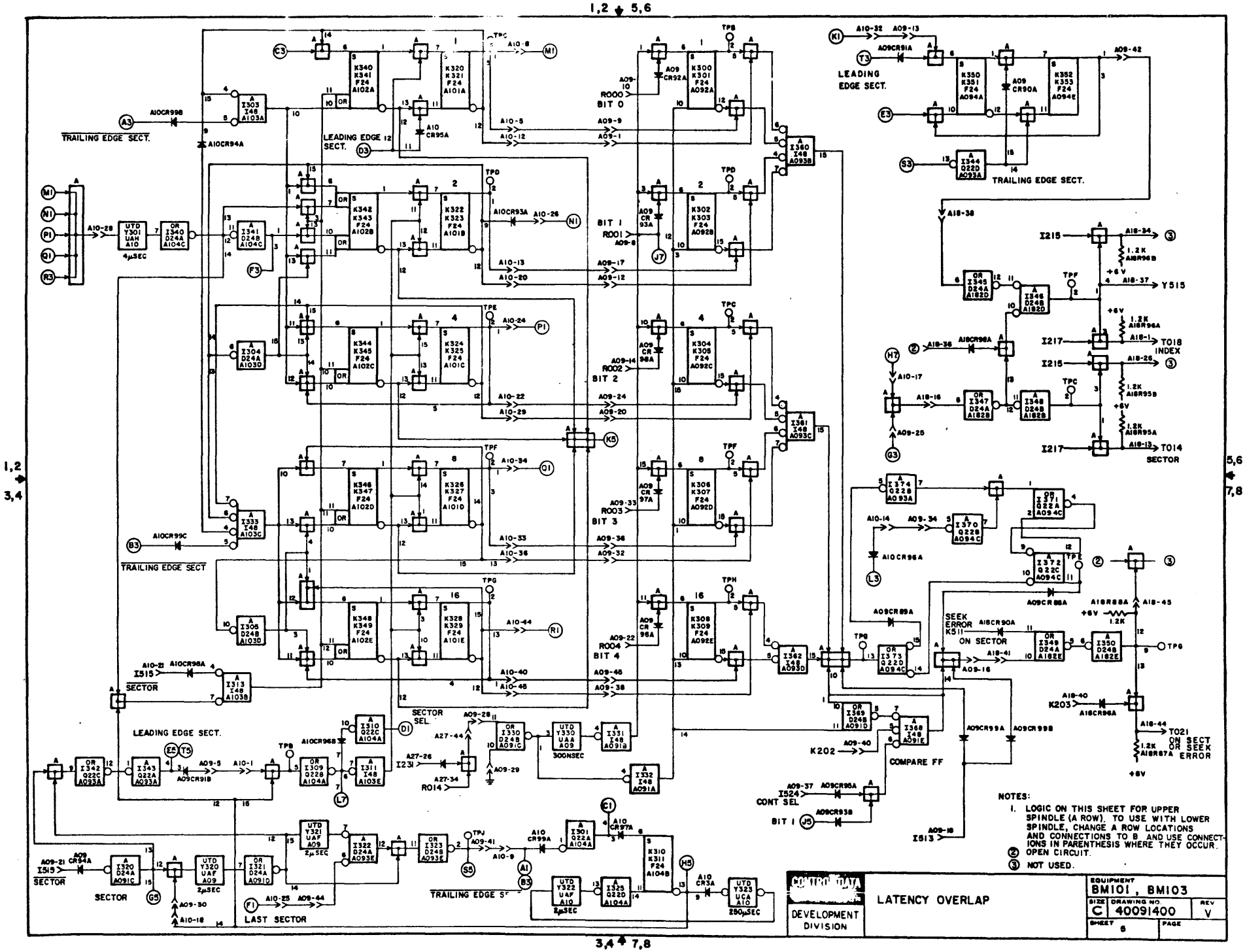
1,2 ↓ 5,6
1,2 ↓ 3,4
5,6 ↓ 7,8
3,4 ↓ 7,8
LATENCY OVERLAP
DEVELOPMENT DIVISION
EQUIPMENT BM101, BM103
SIZE C
DRAWING NO. 40091400
REV V
SHEET 6
PAGE
NOTES:
1. LOGIC ON THIS SHEET FOR UPPER SPINDLE (A ROW). TO USE WITH LOWER SPINDLE, CHANGE A ROW LOCATIONS AND CONNECTIONS TO B AND USE CONNECTIONS IN PARENTHESIS WHERE THEY OCCUR.
(2) OPEN CIRCUIT.
(3) NOT USED.
LEADING EDGE SECT.
TRAILING EDGE SECT.
SECTOR
LAST SECTOR
BIT 0
BIT 1
BIT 2
BIT 3
BIT 4
SECTOR SEL.
SEEK ERROR
ON SECTOR
CONT SEL
COMPARE FF
INDEX
TO18 INDEX
TO14 SECTOR
TO21 ON SECT OR SEEK ERROR

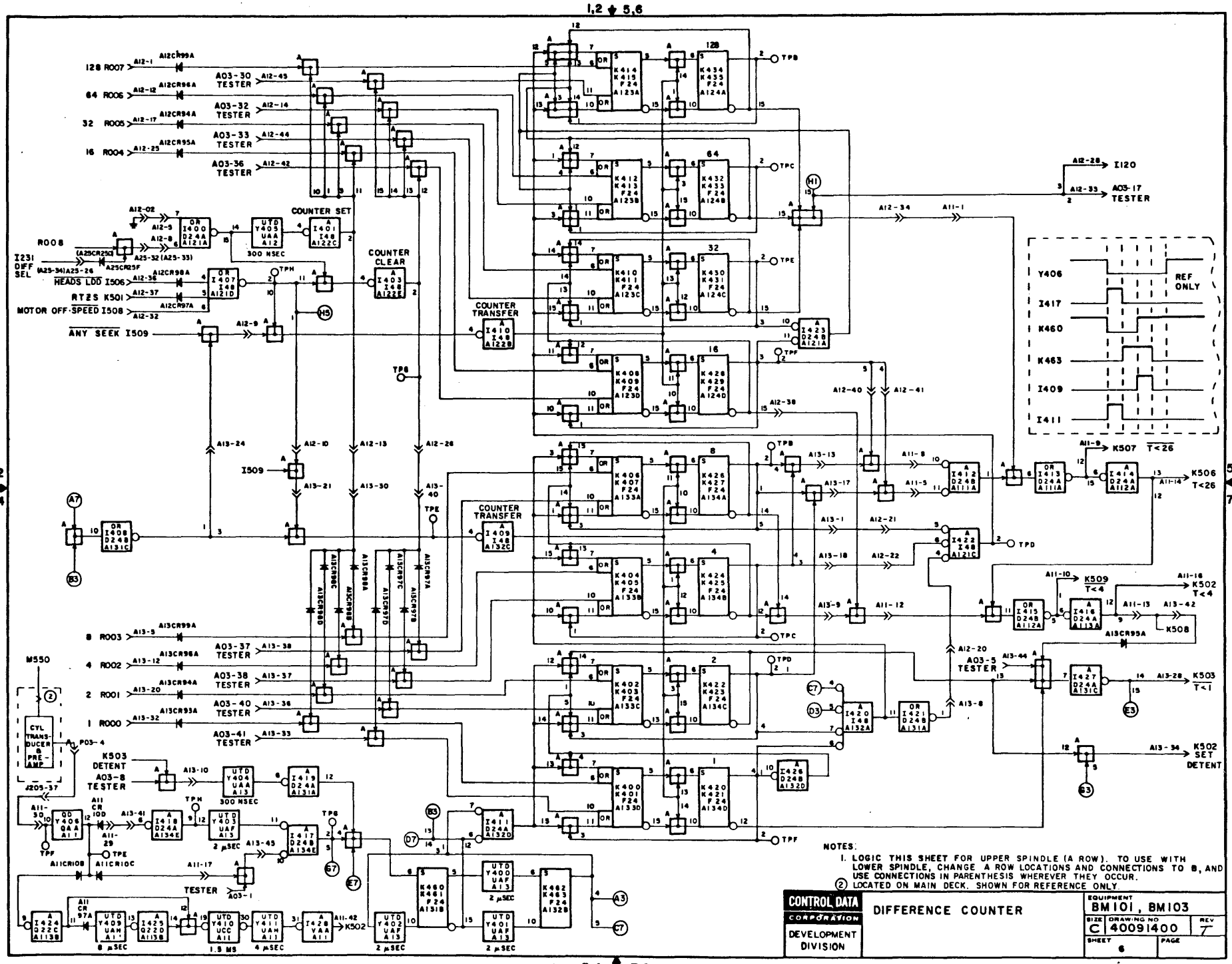
1,2 ↓ 5,6
3,4 ↑ 7,8
128 R007
64 R006
32 R005
16 R004
8 R003
4 R002
2 R001
1 R000
A03-30 TESTER
A03-32 TESTER
A03-33 TESTER
A03-36 TESTER
A03-37 TESTER
A03-38 TESTER
A03-40 TESTER
A03-41 TESTER
A03-8 TESTER
A03-5 TESTER
A03-17 TESTER
COUNTER SET
COUNTER CLEAR
COUNTER TRANSFER
COUNTER TRANSFER
300 NSEC
R008
I231 DIFF SEL
HEADS LDD I506
RTZS K501
MOTOR OFF-SPEED I508
ANY SEEK I509
I509
M550
CYL TRANSDUCER & PRE-AMP
K503 DETENT
A03-8 TESTER
TESTER
8 μSEC
1.9 MS
4 μSEC
2 μSEC
2 μSEC
2 μSEC
2 μSEC
Y406
I417
K460
I409
I411
REF ONLY
K507 T<26
K506 T<26
K509 T<4
K502 T<4
K508
K503 T<1
K502 SET DETENT
I120
A03-17 TESTER
NOTES:
1. LOGIC THIS SHEET FOR UPPER SPINDLE (A ROW). TO USE WITH LOWER SPINDLE, CHANGE A ROW LOCATIONS AND CONNECTIONS TO B, AND USE CONNECTIONS IN PARENTHESIS WHEREVER THEY OCCUR.
(2) LOCATED ON MAIN DECK. SHOWN FOR REFERENCE ONLY.
CONTROL DATA CORPORATION
DEVELOPMENT DIVISION
DIFFERENCE COUNTER
EQUIPMENT BM101, BM103
SIZE C
DRAWING NO 40091400
REV 7
SHEET 6
PAGE

41249000 D

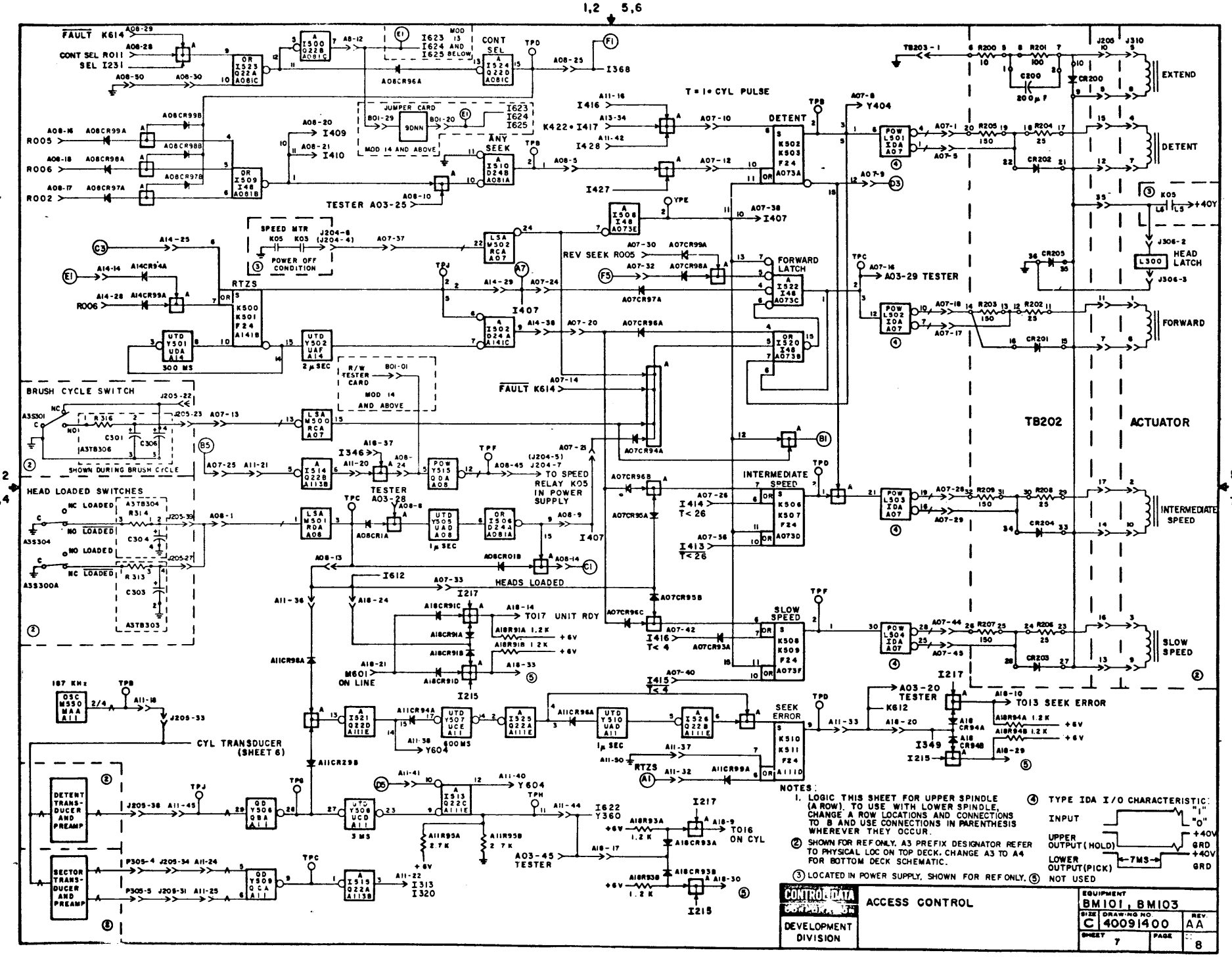

NOTES:

1. LOGIC THIS SHEET FOR UPPER SPINDLE (A ROW). TO USE WITH LOWER SPINDLE, CHANGE A ROW LOCATIONS AND CONNECTIONS TO B AND USE CONNECTIONS IN PARENTHESIS WHEREVER THEY OCCUR.
2. SHOWN FOR REF ONLY. A3 PREFIX DESIGNATOR REFER TO PHYSICAL LOC ON TOP DECK. CHANGE A3 TO A4 FOR BOTTOM DECK SCHEMATIC.
3. LOCATED IN POWER SUPPLY, SHOWN FOR REF ONLY.
4. TYPE IDA I/O CHARACTERISTIC: INPUT "1" "0"; UPPER OUTPUT (HOLD) +40V GRD; LOWER OUTPUT (PICK) +40V GRD; 7MS
5. NOT USED

CONTROL DATA CORPORATION
DEVELOPMENT DIVISION

ACCESS CONTROL

EQUIPMENT		
BM101, BM103		
SIZE C	DRAWING NO. 40091400	REV. AA
SHEET 7	PAGE	8

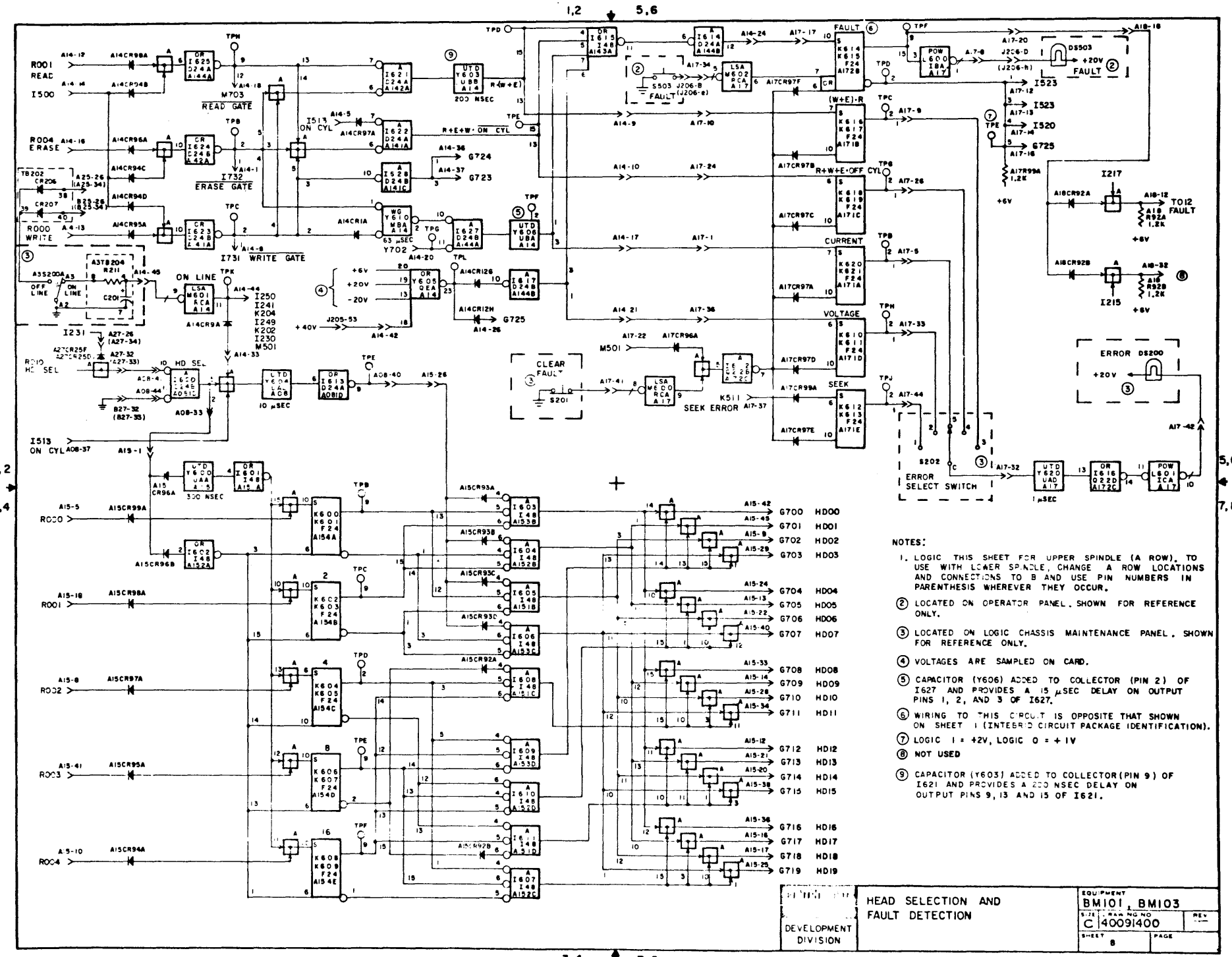
NOTES:
1. LOGIC THIS SHEET FOR UPPER SPINDLE (A ROW). TO USE WITH LOWER SPINDLE, CHANGE A ROW LOCATIONS AND CONNECTIONS TO B AND USE PIN NUMBERS IN PARENTHESIS WHEREVER THEY OCCUR.
2. LOCATED ON OPERATOR PANEL. SHOWN FOR REFERENCE ONLY.
3. LOCATED ON LOGIC CHASSIS MAINTENANCE PANEL. SHOWN FOR REFERENCE ONLY.
4. VOLTAGES ARE SAMPLED ON CARD.
5. CAPACITOR (Y606) ADDED TO COLLECTOR (PIN 2) OF I627 AND PROVIDES A 15 μSEC DELAY ON OUTPUT PINS 1, 2, AND 3 OF I627.
6. WIRING TO THIS CIRCUIT IS OPPOSITE THAT SHOWN ON SHEET 1 (INTEGRID CIRCUIT PACKAGE IDENTIFICATION).
7. LOGIC 1 = +2V, LOGIC 0 = +1V
8. NOT USED
9. CAPACITOR (Y603) ADDED TO COLLECTOR (PIN 9) OF I621 AND PROVIDES A 200 NSEC DELAY ON OUTPUT PINS 9, 13 AND 15 OF I621.
HEAD SELECTION AND FAULT DETECTION
DEVELOPMENT DIVISION
EQUIPMENT BM101, BM103
SIZE C
DRAWING NO 40091400
REV
SHEET 8
PAGE

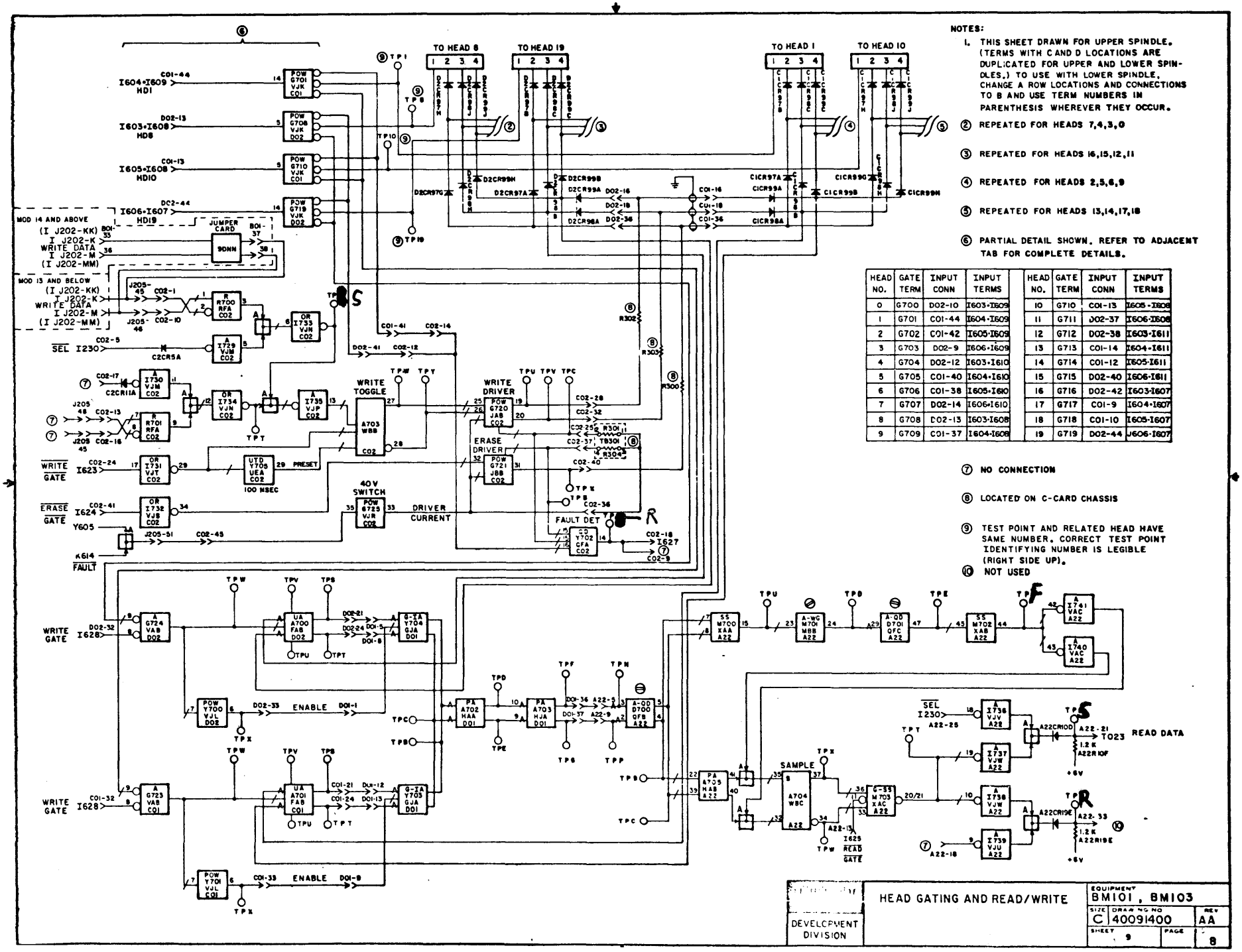

NOTES:

1. THIS SHEET DRAWN FOR UPPER SPINDLE. (TERMS WITH C AND D LOCATIONS ARE DUPLICATED FOR UPPER AND LOWER SPINDLES.) TO USE WITH LOWER SPINDLE, CHANGE A ROW LOCATIONS AND CONNECTIONS TO B AND USE TERM NUMBERS IN PARENTHESIS WHEREVER THEY OCCUR.

② REPEATED FOR HEADS 7,4,3,0

③ REPEATED FOR HEADS 16,15,12,11

④ REPEATED FOR HEADS 2,5,6,9

⑤ REPEATED FOR HEADS 13,14,17,18

⑥ PARTIAL DETAIL SHOWN. REFER TO ADJACENT TAB FOR COMPLETE DETAILS.

HEAD NO.	GATE TERM	INPUT CONN	INPUT TERMS	HEAD NO.	GATE TERM	INPUT CONN	INPUT TERMS
0	G700	D02-10	I603-I609	10	G710	C01-13	I605-I608
1	G701	C01-44	I604-I609	11	G711	D02-37	I606-I608
2	G702	C01-42	I605-I609	12	G712	D02-38	I603-I611
3	G703	D02-9	I606-I609	13	G713	C01-14	I604-I611
4	G704	D02-12	I603-I610	14	G714	C01-12	I605-I611
5	G705	C01-40	I604-I610	15	G715	D02-40	I606-I611
6	G706	C01-38	I605-I610	16	G716	D02-42	I603-I607
7	G707	D02-14	I606-I610	17	G717	C01-9	I604-I607
8	G708	D02-13	I603-I608	18	G718	C01-10	I605-I607
9	G709	C01-37	I604-I608	19	G719	D02-44	I606-I607

⑦ NO CONNECTION

⑧ LOCATED ON C-CARD CHASSIS

⑨ TEST POINT AND RELATED HEAD HAVE SAME NUMBER. CORRECT TEST POINT IDENTIFYING NUMBER IS LEGIBLE (RIGHT SIDE UP).

⑩ NOT USED

LOGIC CHASSIS

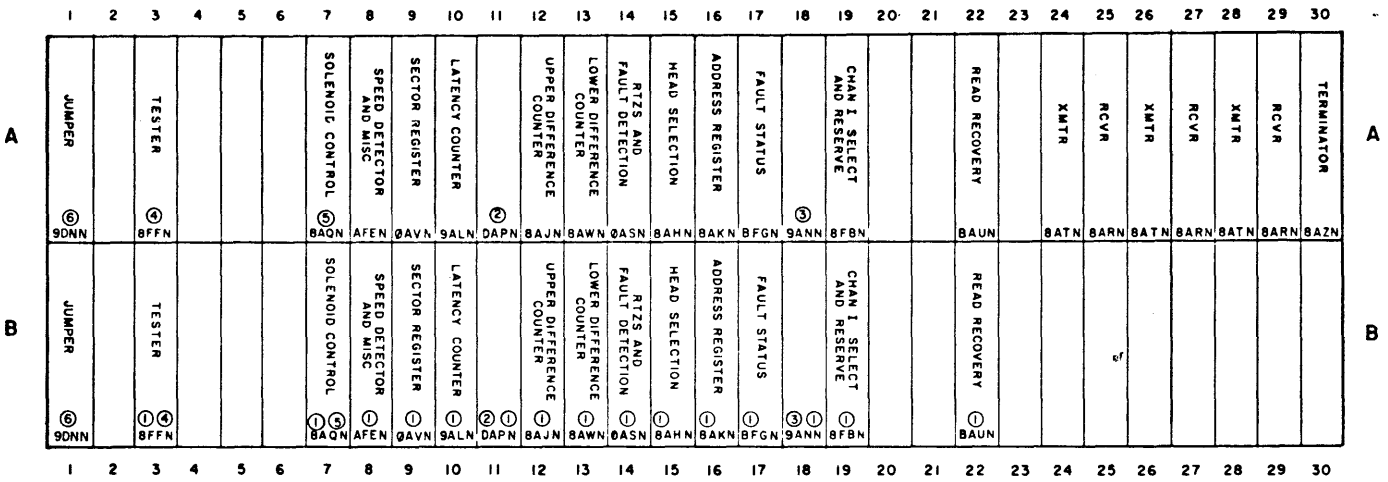

UPPER DECK

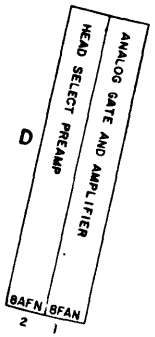

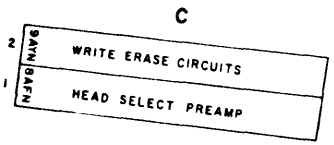

① LOWER DECK

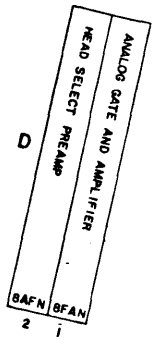

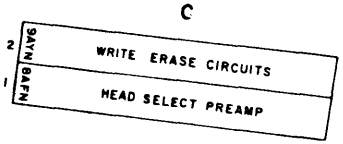

NOTES:

① NOT PRESENT IN IX CABINET

② ANY SEEK, SEEK ERROR, ON CYL, AND SPEED DETECTION

③ STEERING UNIT LOGIC

④ OPTIONAL CARD SHOWN FOR REFERENCE ONLY. WHEN TESTER (CDC P/N 40072100) IS USED DURING MAINTENANCE SITUATION, INSTALL IT AT A03 FOR UPPER SPINDLE OR B03 FOR LOWER SPINDLE. LOGIC SHEETS SHOW INTERFACE WITH TESTER. TESTER CARD SCHEMATIC SHOWN WITH CARD SCHEMATICS.

⑤ ØAQN INSTALLED IN UNIT SERIAL NUMBERS 575 AND ABOVE OR UNITS WITH FCO PE11426 OR PE11427 INSTALLED.

⑥ MOD 14 AND ABOVE. THE 9DNN IS USED IN NORMAL OPERATION. IN A TEST SITUATION A 9DMN TEST CARD (54014500) IS INSTALLED IN A01 FOR LOWER SPINDLE OR B01 FOR UPPER SPINDLE.

CONTROL DATA
DEVELOPMENT DIVISION

CHASSIS MAP

EQUIPMENT: BM101, BM103
SIZE C | DRAWING NO. 40091400 | REV. AA
SHEET 10 | PAGE 8

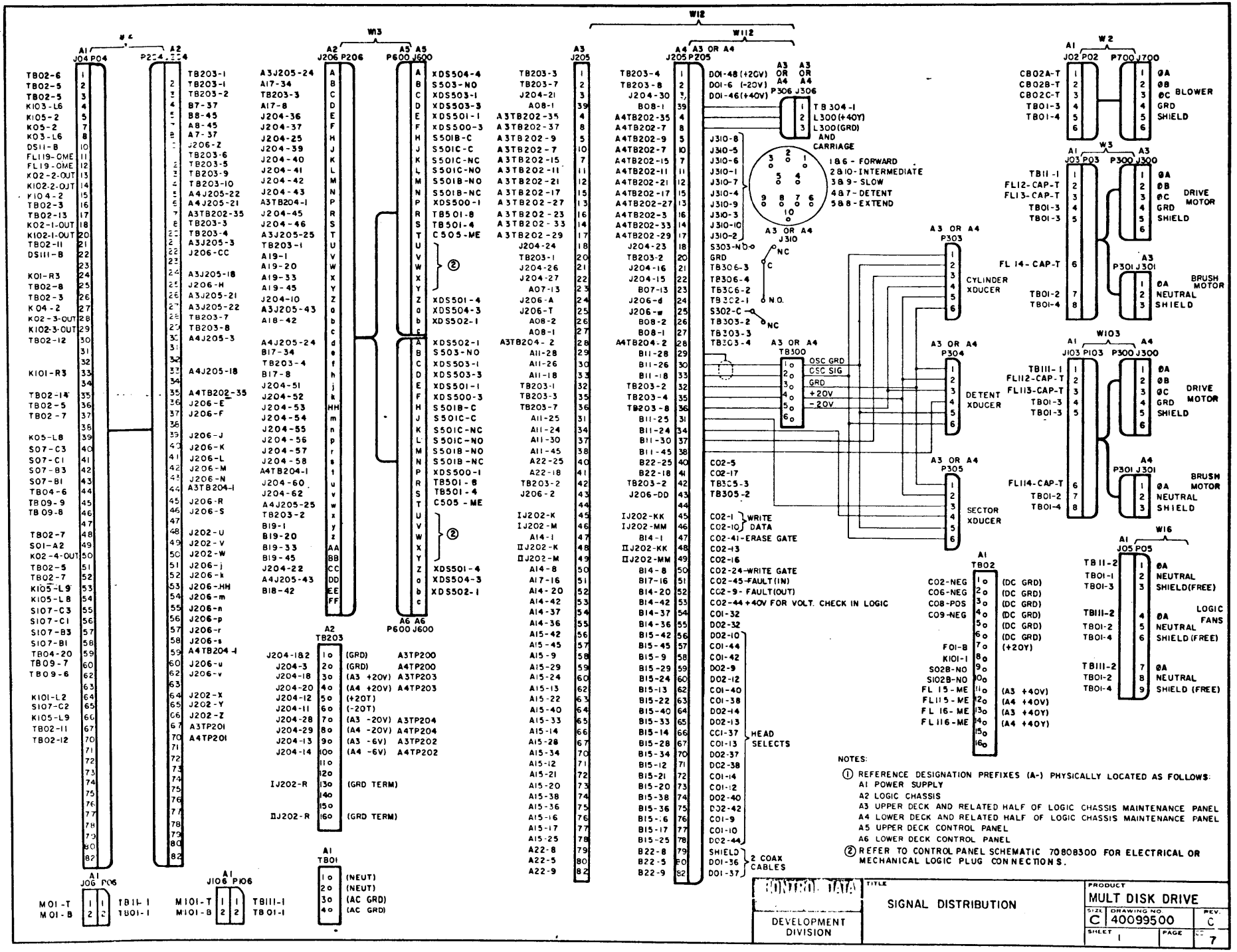
NOTES:
① REFERENCE DESIGNATION PREFIXES (A-) PHYSICALLY LOCATED AS FOLLOWS:
A1 POWER SUPPLY
A2 LOGIC CHASSIS
A3 UPPER DECK AND RELATED HALF OF LOGIC CHASSIS MAINTENANCE PANEL
A4 LOWER DECK AND RELATED HALF OF LOGIC CHASSIS MAINTENANCE PANEL
A5 UPPER DECK CONTROL PANEL
A6 LOWER DECK CONTROL PANEL
② REFER TO CONTROL PANEL SCHEMATIC 70808300 FOR ELECTRICAL OR MECHANICAL LOGIC PLUG CONNECTIONS.
CONTROL DATA
DEVELOPMENT DIVISION
TITLE
SIGNAL DISTRIBUTION
PRODUCT
MULT DISK DRIVE
SIZE C
DRAWING NO. 40099500
REV. C
SHEET 1
PAGE 7

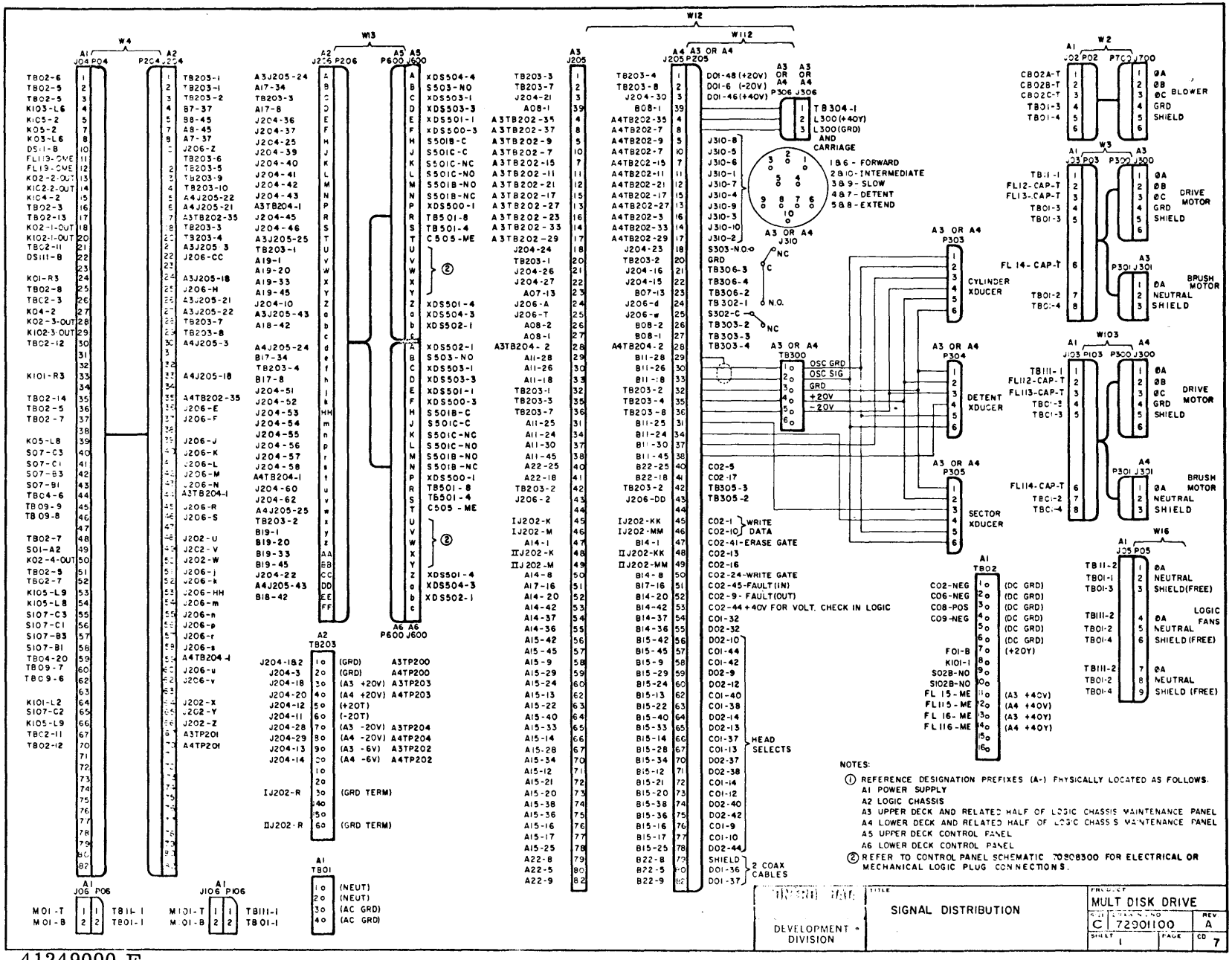

NOTES:

① REFERENCE DESIGNATION PREFIXES (A-) PHYSICALLY LOCATED AS FOLLOWS.
A1 POWER SUPPLY
A2 LOGIC CHASSIS
A3 UPPER DECK AND RELATED HALF OF LOGIC CHASSIS MAINTENANCE PANEL
A4 LOWER DECK AND RELATED HALF OF LOGIC CHASSIS MAINTENANCE PANEL
A5 UPPER DECK CONTROL PANEL
A6 LOWER DECK CONTROL PANEL

② REFER TO CONTROL PANEL SCHEMATIC 70908300 FOR ELECTRICAL OR MECHANICAL LOGIC PLUG CONNECTIONS.

DEVELOPMENT DIVISION	SIGNAL DISTRIBUTION	PROJECT: MULT DISK DRIVE	
		DWG NO: C 72901100	REV: A
		SHEET: 1	PAGE: CD 7

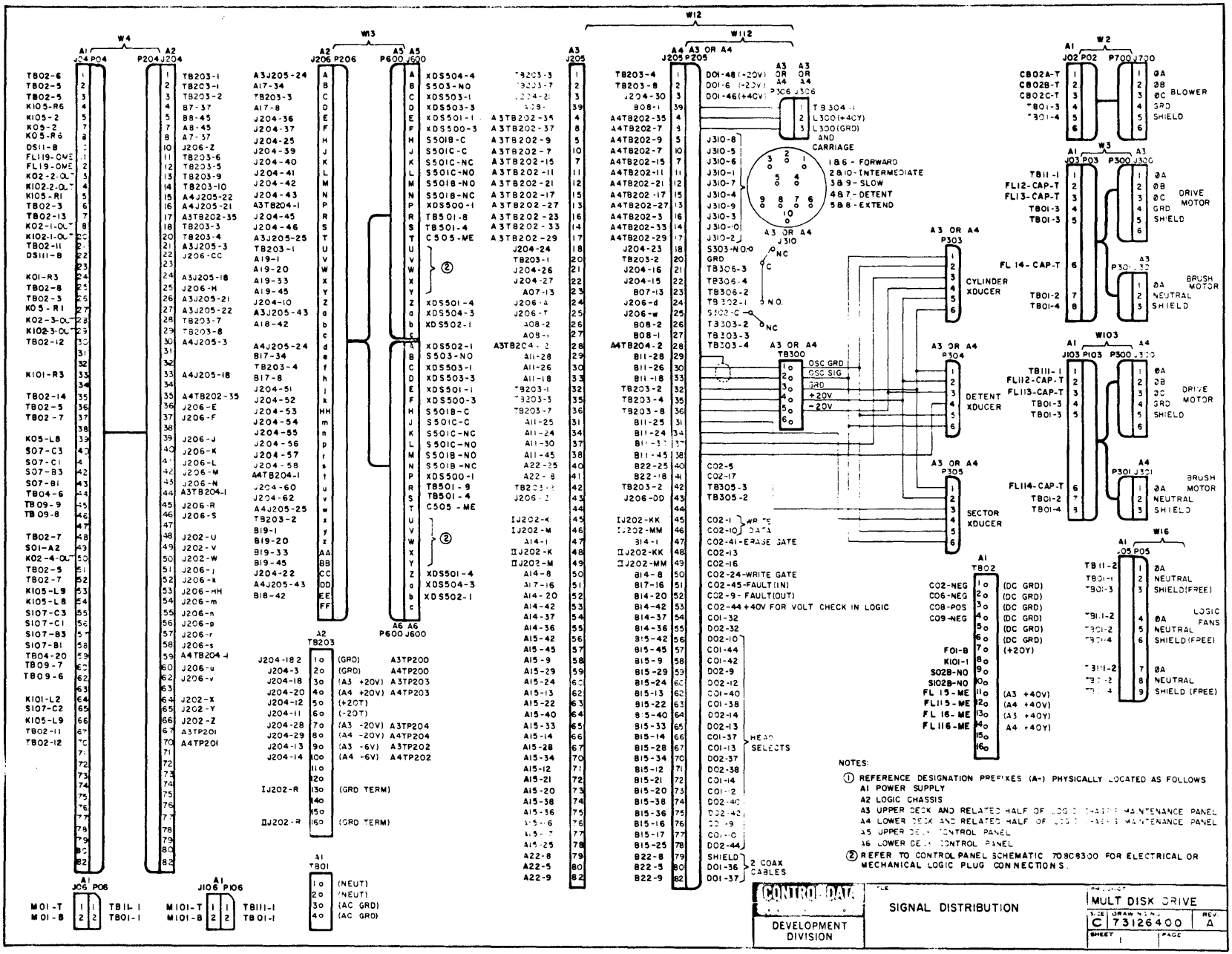
W4
W13
W12
W112
W2
W3
W103
W16
CYLINDER XDUCER
DETENT XDUCER
SECTOR XDUCER
BLOWER
DRIVE MOTOR
BRUSH MOTOR
LOGIC FANS
HEAD SELECTS
2 COAX CABLES
1 & 6 - FORWARD
2 & 10 - INTERMEDIATE
3 & 9 - SLOW
4 & 7 - DETENT
5 & 8 - EXTEND
NOTES:
① REFERENCE DESIGNATION PREFIXES (A-) PHYSICALLY LOCATED AS FOLLOWS
A1 POWER SUPPLY
A2 LOGIC CHASSIS
A3 UPPER DECK AND RELATED HALF OF LOGIC CHASSIS MAINTENANCE PANEL
A4 LOWER DECK AND RELATED HALF OF LOGIC CHASSIS MAINTENANCE PANEL
A5 UPPER DECK CONTROL PANEL
A6 LOWER DECK CONTROL PANEL
② REFER TO CONTROL PANEL SCHEMATIC 70808300 FOR ELECTRICAL OR MECHANICAL LOGIC PLUG CONNECTIONS.
CONTROL DATA
DEVELOPMENT DIVISION
SIGNAL DISTRIBUTION
MULT DISK DRIVE
C 73126400 A
SHEET 1

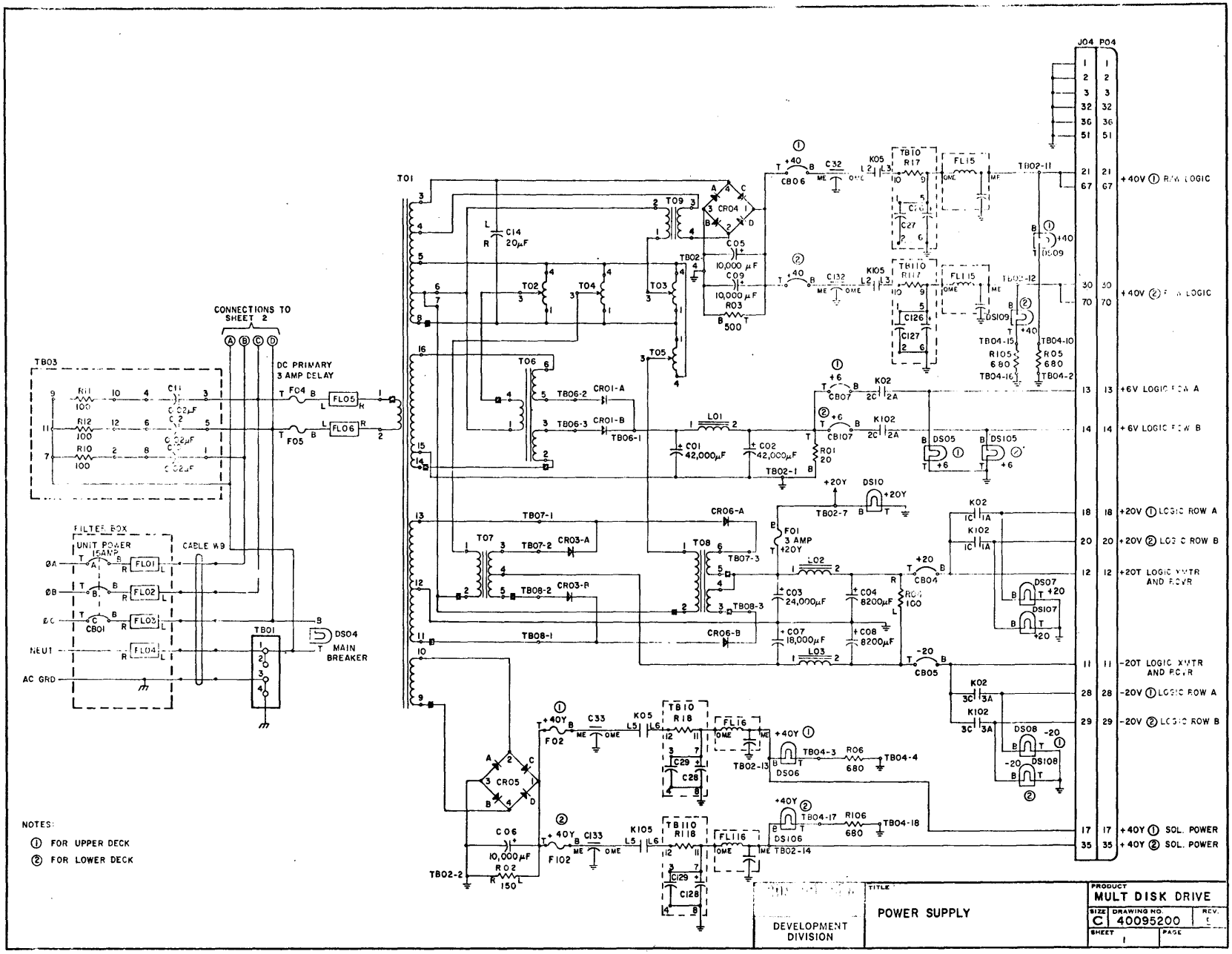
CONNECTIONS TO SHEET 2
DC PRIMARY 3 AMP DELAY
FILTER BOX
UNIT POWER 15AMP
CABLE W9
MAIN BREAKER
NOTES:
① FOR UPPER DECK
② FOR LOWER DECK
DEVELOPMENT DIVISION
POWER SUPPLY
PRODUCT MULT DISK DRIVE
SIZE C
DRAWING NO. 40095200
REV. E
SHEET 1
PAGE

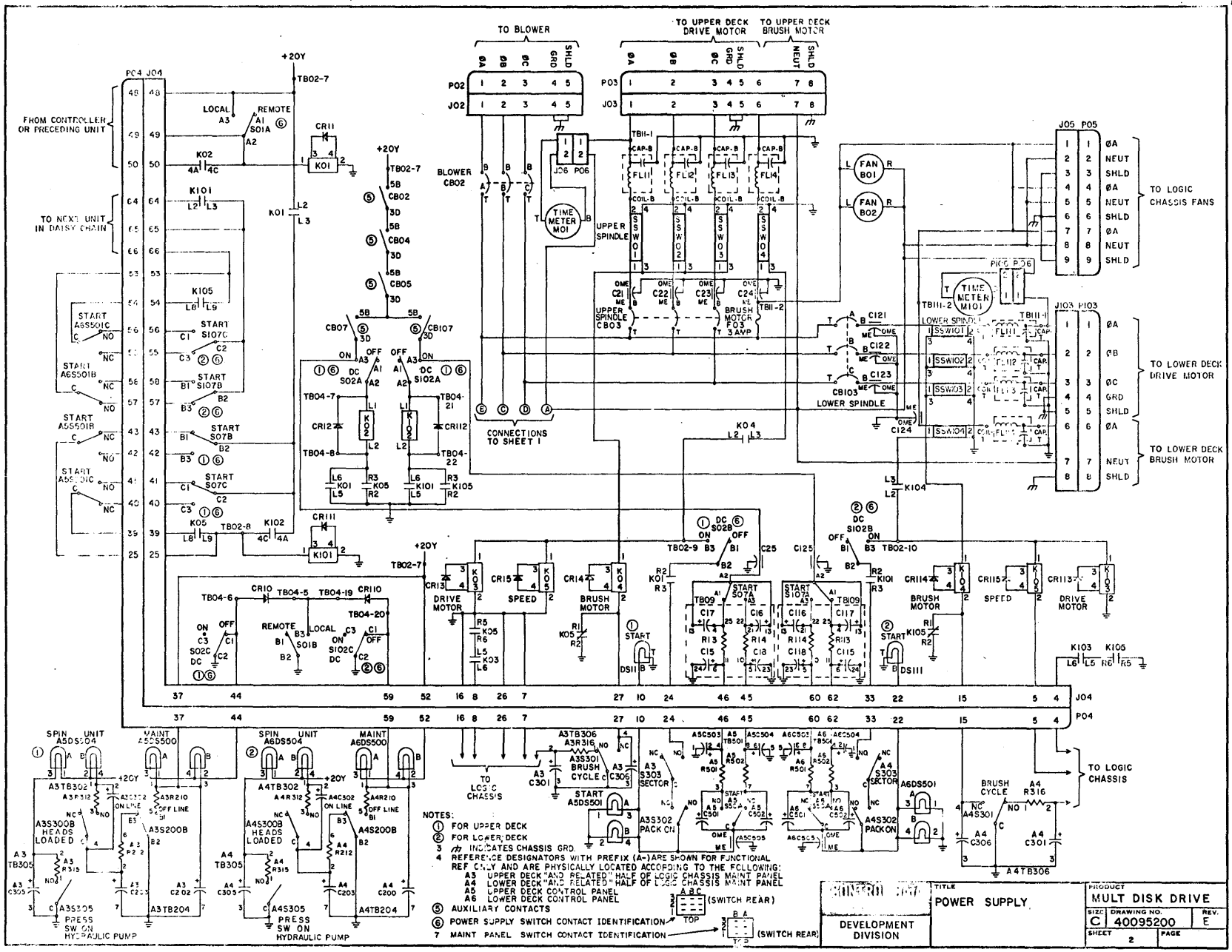
TO BLOWER
TO UPPER DECK DRIVE MOTOR
TO UPPER DECK BRUSH MOTOR
FROM CONTROLLER OR PRECEDING UNIT
TO NEXT UNIT IN DAISY CHAIN
TO LOGIC CHASSIS FANS
TO LOWER DECK DRIVE MOTOR
TO LOWER DECK BRUSH MOTOR
TO LOGIC CHASSIS
CONNECTIONS TO SHEET 1
NOTES:
1 FOR UPPER DECK
2 FOR LOWER DECK
3 INDICATES CHASSIS GRD
4 REFERENCE DESIGNATORS WITH PREFIX (A-) ARE SHOWN FOR FUNCTIONAL REF ONLY AND ARE PHYSICALLY LOCATED ACCORDING TO THE FOLLOWING:
A3 UPPER DECK "AND RELATED" HALF OF LOGIC CHASSIS MAINT PANEL
A4 LOWER DECK "AND RELATED" HALF OF LOGIC CHASSIS MAINT PANEL
A5 UPPER DECK CONTROL PANEL
A6 LOWER DECK CONTROL PANEL
5 AUXILIARY CONTACTS
6 POWER SUPPLY SWITCH CONTACT IDENTIFICATION
7 MAINT PANEL SWITCH CONTACT IDENTIFICATION
DEVELOPMENT DIVISION
POWER SUPPLY
MULT DISK DRIVE
C 40095200
SHEET 2

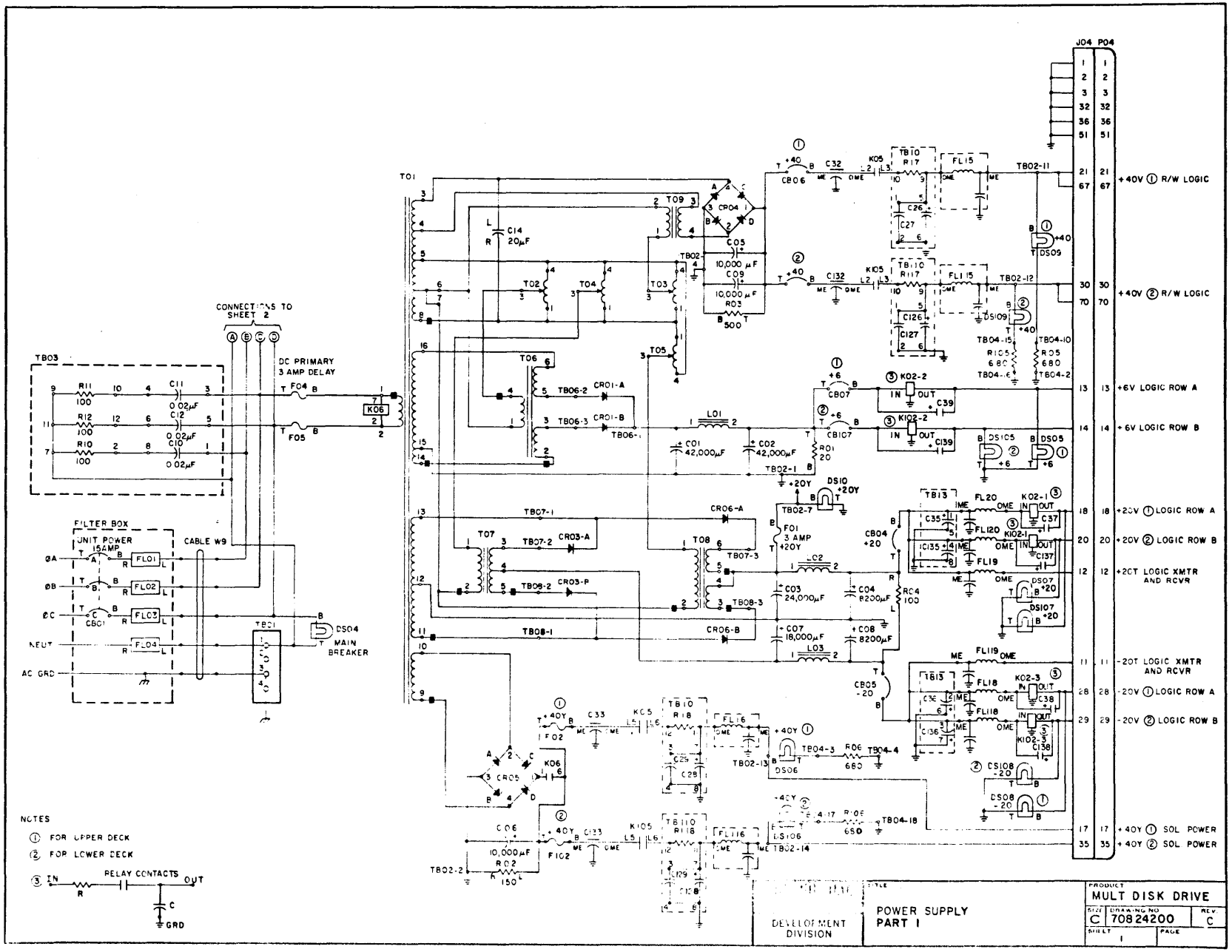
J04 P04
+40V ① R/W LOGIC
+40V ② R/W LOGIC
+6V LOGIC ROW A
+6V LOGIC ROW B
+20V ① LOGIC ROW A
+20V ② LOGIC ROW B
+20T LOGIC XMTR AND RCVR
-20T LOGIC XMTR AND RCVR
-20V ① LOGIC ROW A
-20V ② LOGIC ROW B
+40Y ① SOL POWER
+40Y ② SOL POWER
CONNECTIONS TO SHEET 2
DC PRIMARY 3 AMP DELAY
FILTER BOX
UNIT POWER 15AMP
CABLE W9
MAIN BREAKER
NOTES
① FOR UPPER DECK
② FOR LOWER DECK
③ RELAY CONTACTS
DEVELOPMENT DIVISION
POWER SUPPLY PART 1
MULT DISK DRIVE
DRAWING NO 70824200
SIZE C
REV C
SHEET 1

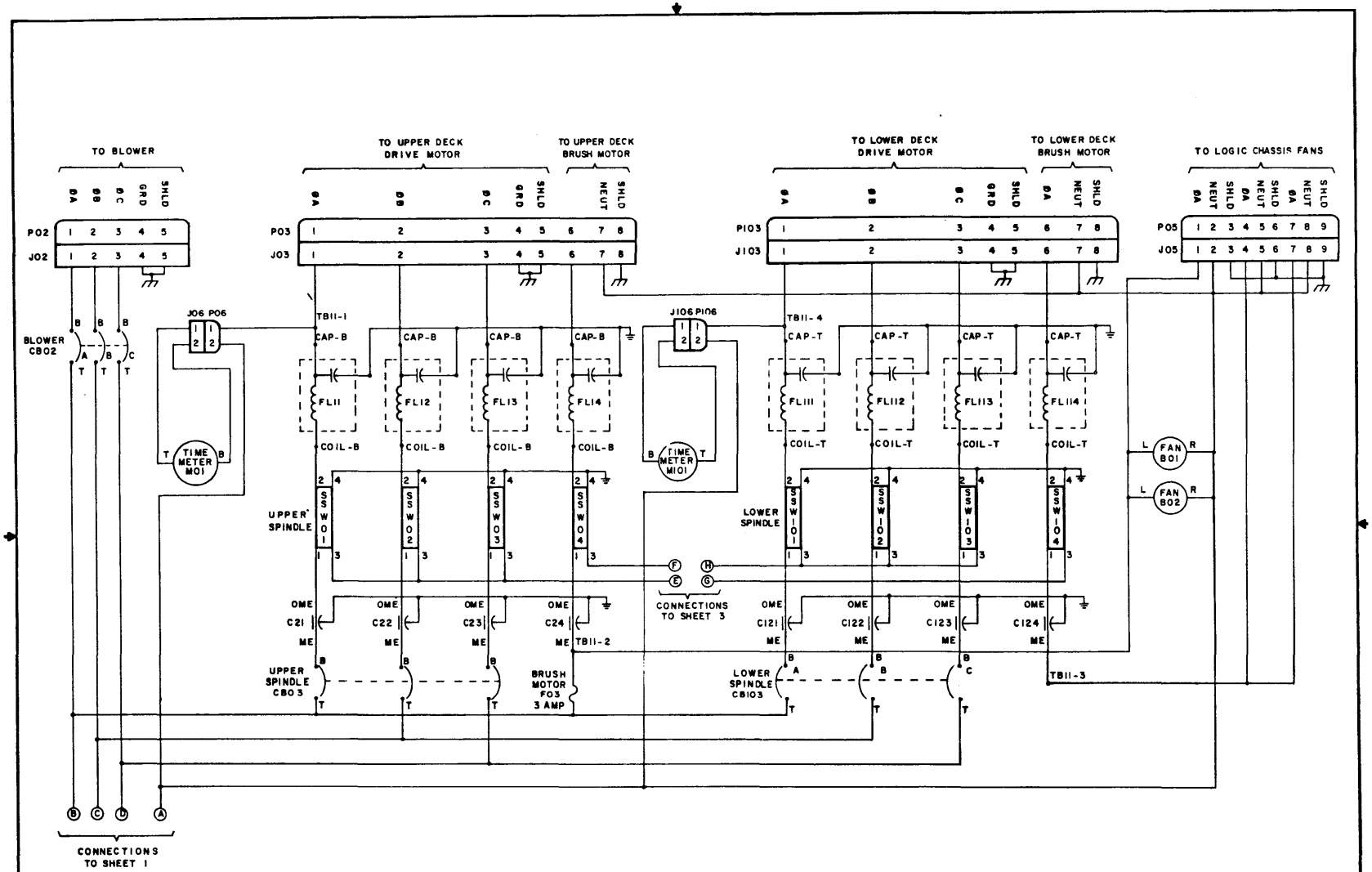

CONTROL DATA CORPORATION
DEVELOPMENT DIVISION

POWER SUPPLY
PART 2

EQUIPMENT: MULT DISK DRIVE
SIZE C | DRAWING NO 70824200 | REV B
SHEET 2 | PAGE

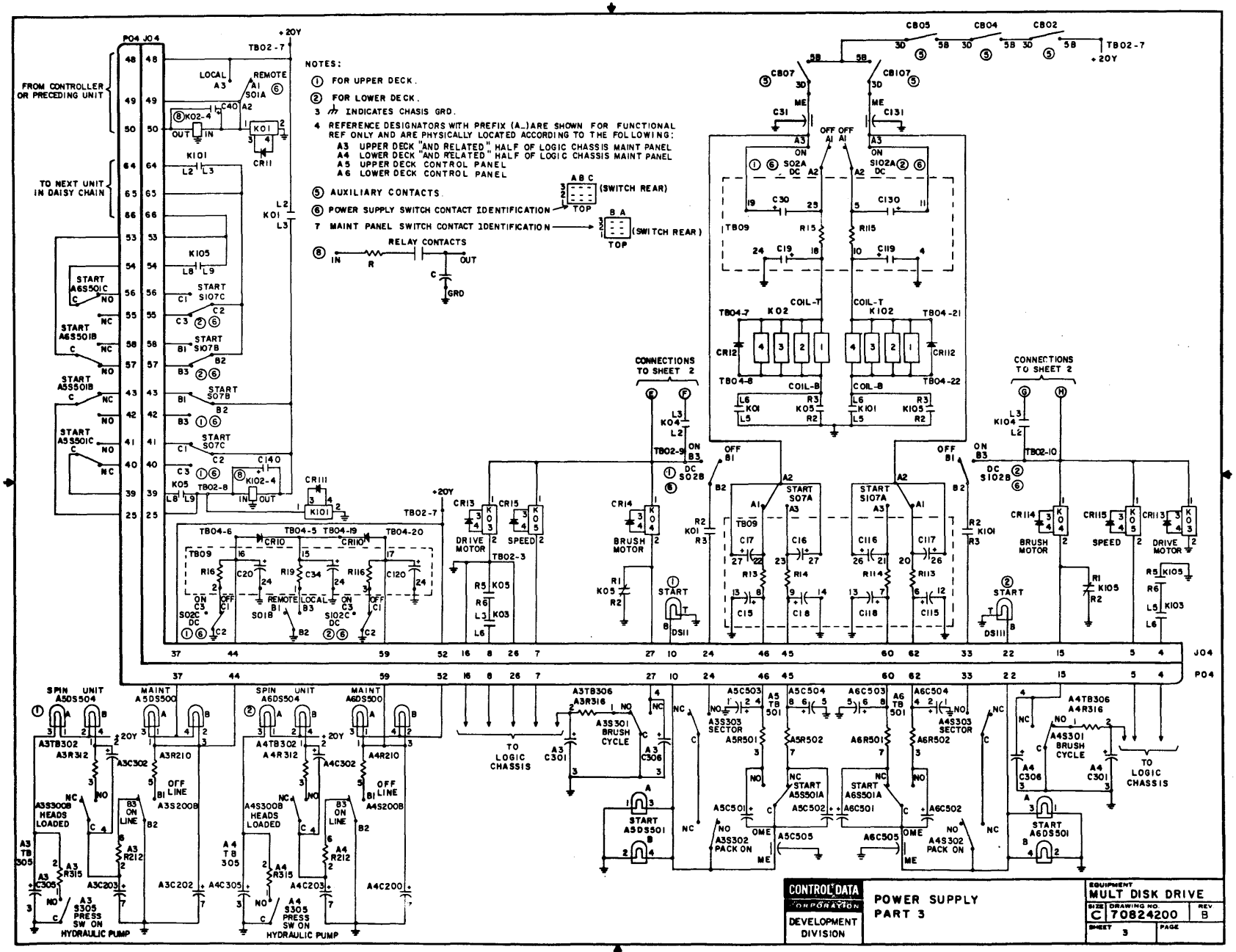

CONTROL DATA CORPORATION
DEVELOPMENT DIVISION

POWER SUPPLY
PART 3

EQUIPMENT MULT DISK DRIVE
SIZE C | DRAWING NO 70824200 | REV B
SHEET 3 | PAGE

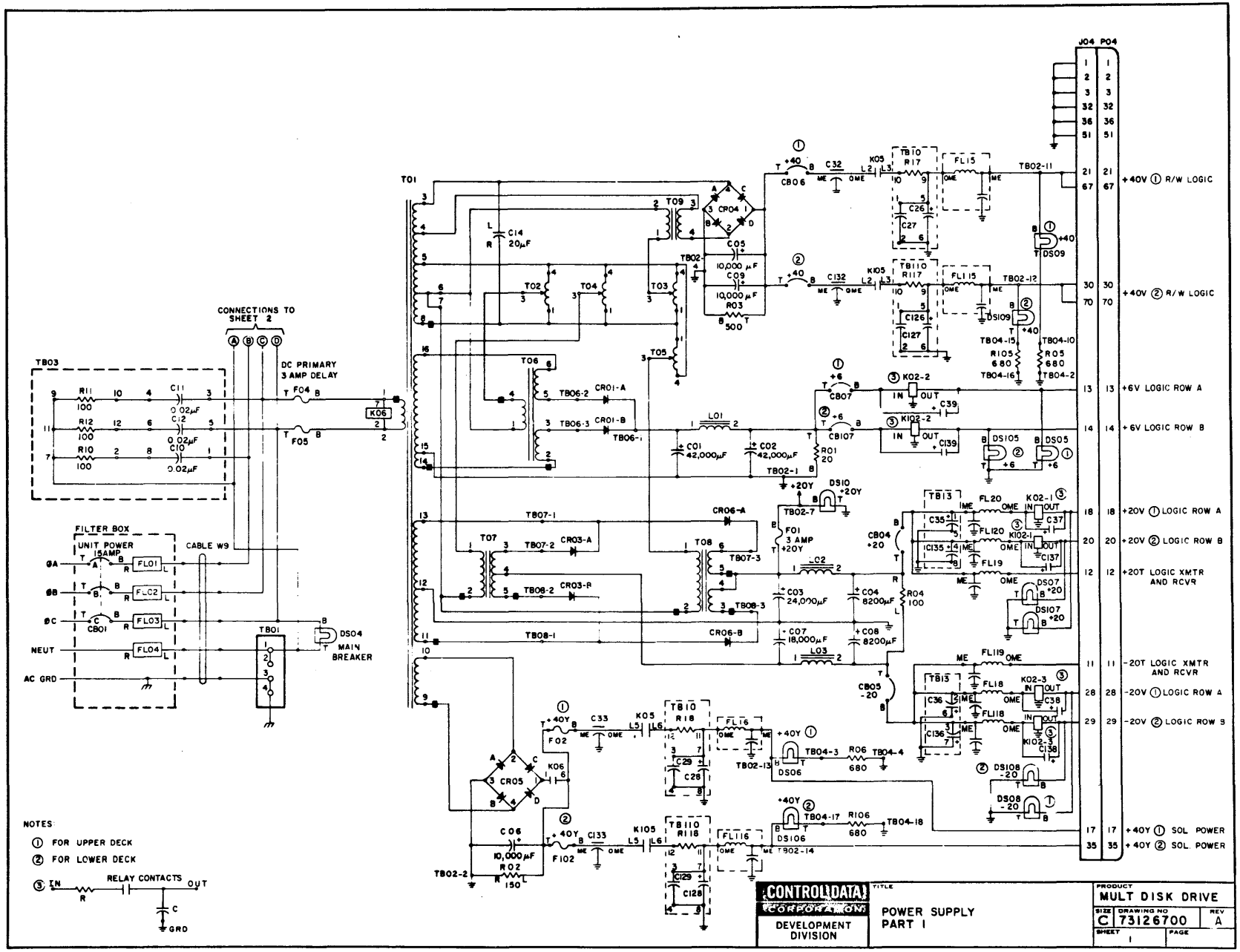
CONNECTIONS TO SHEET 2
DC PRIMARY 3 AMP DELAY
FILTER BOX
UNIT POWER 15AMP
CABLE W9
MAIN BREAKER
NOTES:
① FOR UPPER DECK
② FOR LOWER DECK
RELAY CONTACTS
CONTROL DATA CORPORATION
DEVELOPMENT DIVISION
POWER SUPPLY PART 1
PRODUCT MULT DISK DRIVE
SIZE C
DRAWING NO 73126700
REV A
SHEET 1

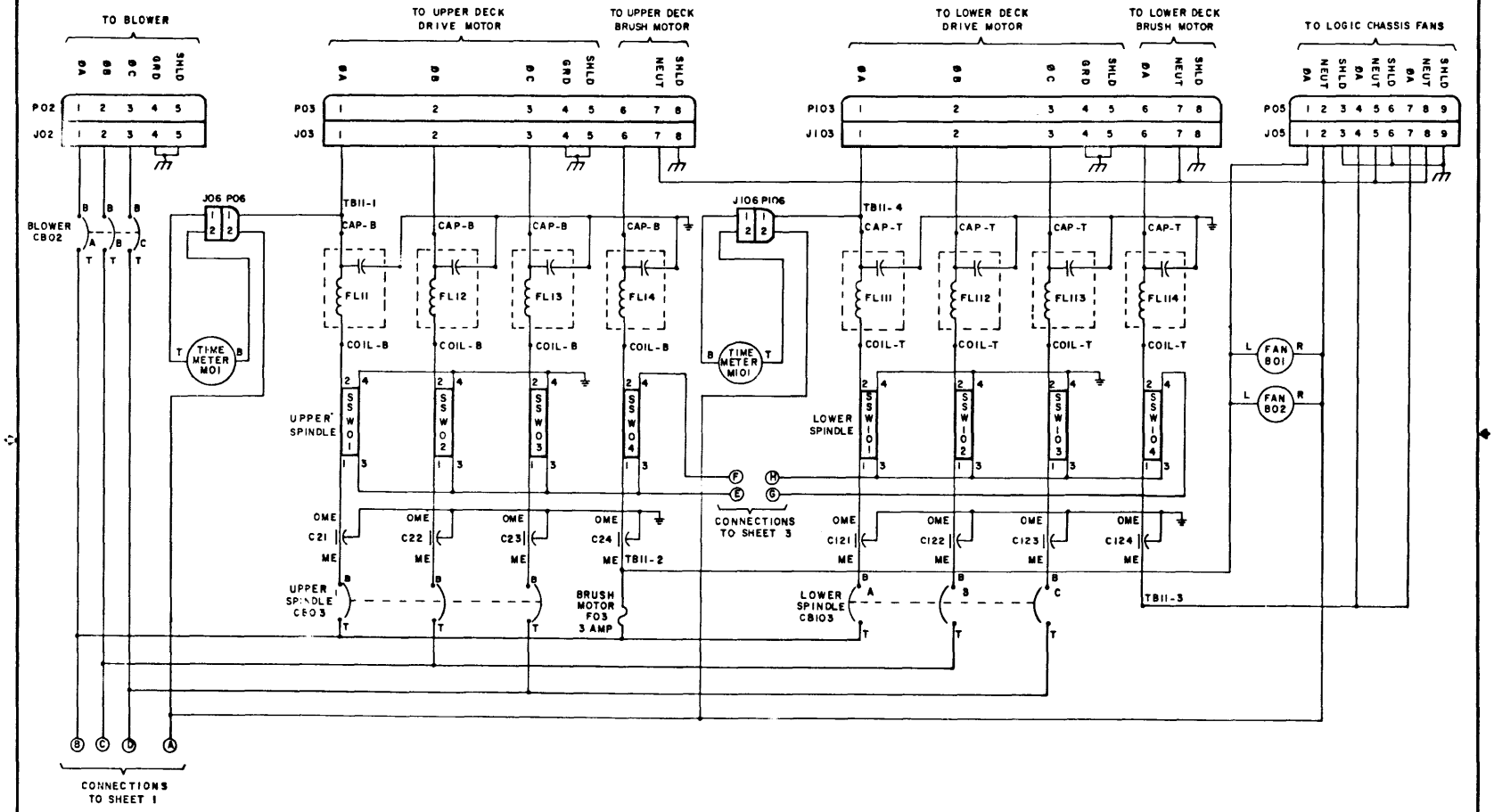

DEVELOPMENT DIVISION

POWER SUPPLY
PART 2

EQUIPMENT: MULT DISK DRIVE
SIZE: C | DRAWING NO: 73126700 | REV: A
SHEET: 2 | PAGE:

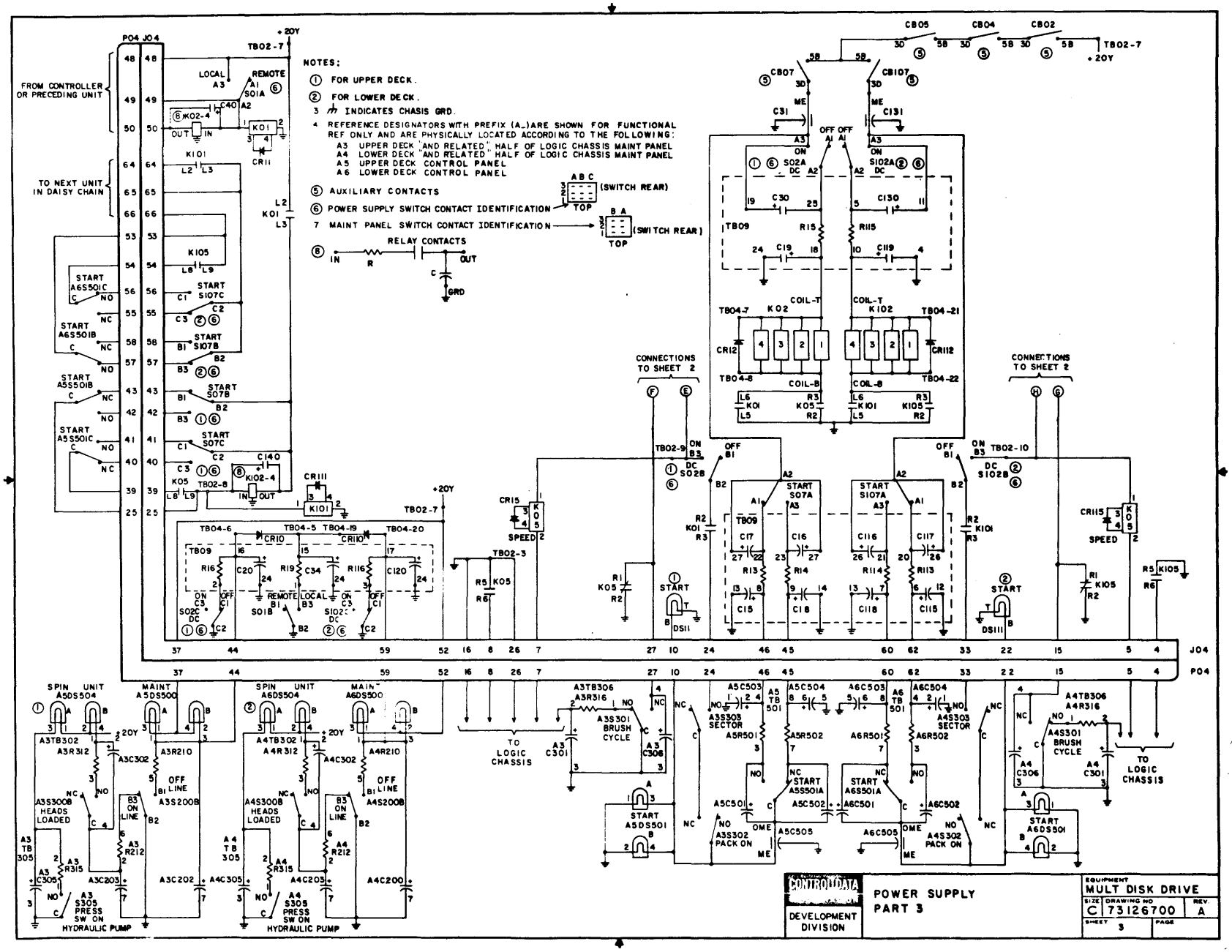
NOTES:
① FOR UPPER DECK.
② FOR LOWER DECK.
3 INDICATES CHASIS GRD.
4 REFERENCE DESIGNATORS WITH PREFIX (A_) ARE SHOWN FOR FUNCTIONAL REF ONLY AND ARE PHYSICALLY LOCATED ACCORDING TO THE FOLLOWING:
A3 UPPER DECK "AND RELATED" HALF OF LOGIC CHASSIS MAINT PANEL
A4 LOWER DECK "AND RELATED" HALF OF LOGIC CHASSIS MAINT PANEL
A5 UPPER DECK CONTROL PANEL
A6 LOWER DECK CONTROL PANEL
⑤ AUXILIARY CONTACTS
⑥ POWER SUPPLY SWITCH CONTACT IDENTIFICATION
7 MAINT PANEL SWITCH CONTACT IDENTIFICATION
⑧ RELAY CONTACTS
(SWITCH REAR)
FROM CONTROLLER OR PRECEDING UNIT
TO NEXT UNIT IN DAISY CHAIN
CONNECTIONS TO SHEET 2
TO LOGIC CHASSIS
HYDRAULIC PUMP
CONTROL DATA
DEVELOPMENT DIVISION
POWER SUPPLY PART 3
EQUIPMENT MULT DISK DRIVE
SIZE C
DRAWING NO 73126700
REV. A
SHEET 3

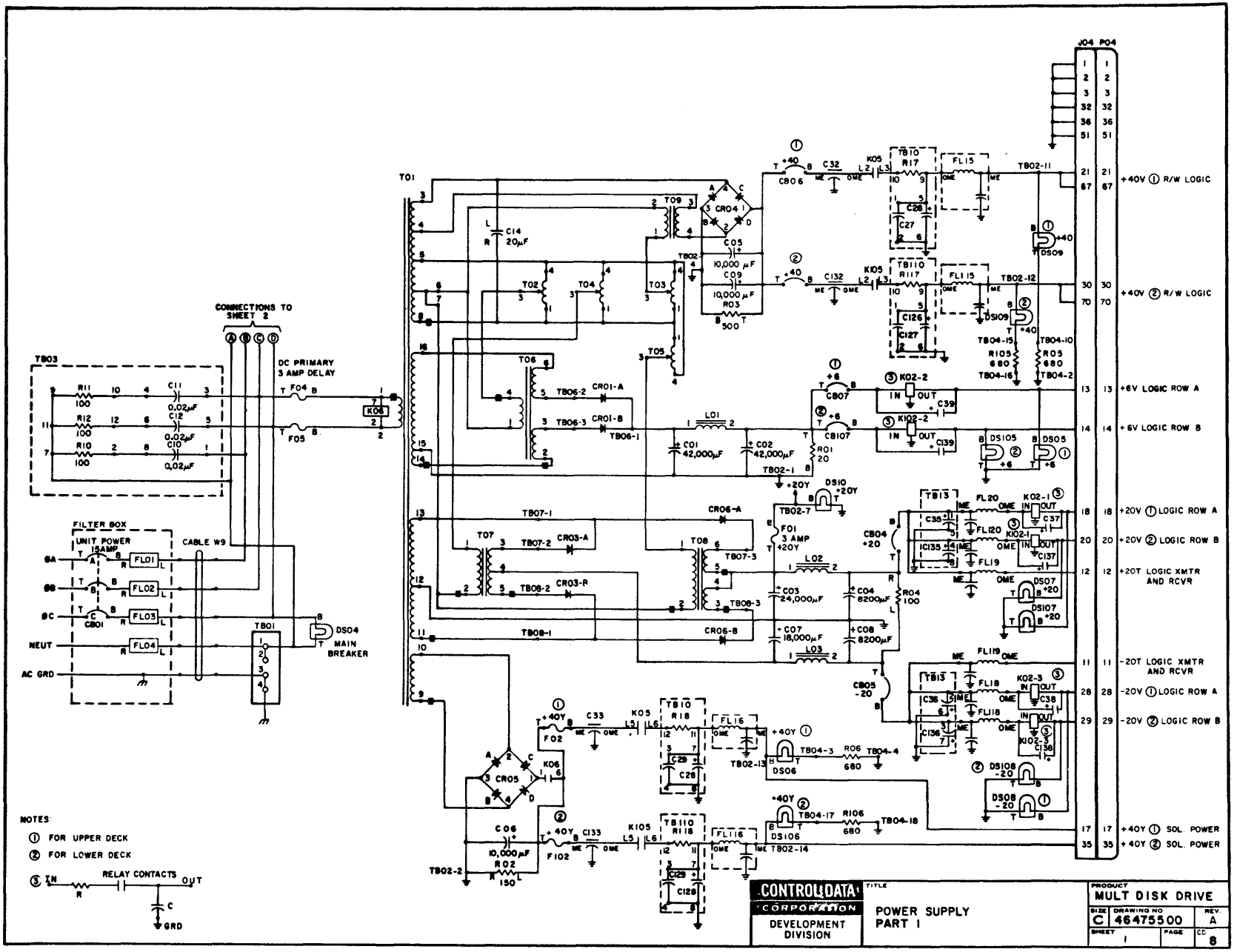
CONNECTIONS TO SHEET 2
DC PRIMARY 3 AMP DELAY
FILTER BOX
UNIT POWER 15AMP
CABLE W9
MAIN BREAKER
NEUT
AC GRD
NOTES:
① FOR UPPER DECK
② FOR LOWER DECK
RELAY CONTACTS
+40V ① R/W LOGIC
+40V ② R/W LOGIC
+6V LOGIC ROW A
+6V LOGIC ROW B
+20V ① LOGIC ROW A
+20V ② LOGIC ROW B
+20T LOGIC XMTR AND RCVR
-20T LOGIC XMTR AND RCVR
-20V ① LOGIC ROW A
-20V ② LOGIC ROW B
+40Y ① SOL. POWER
+40Y ② SOL. POWER
CONTROL DATA CORPORATION
DEVELOPMENT DIVISION
POWER SUPPLY PART 1
MULT DISK DRIVE
C 46475500
A

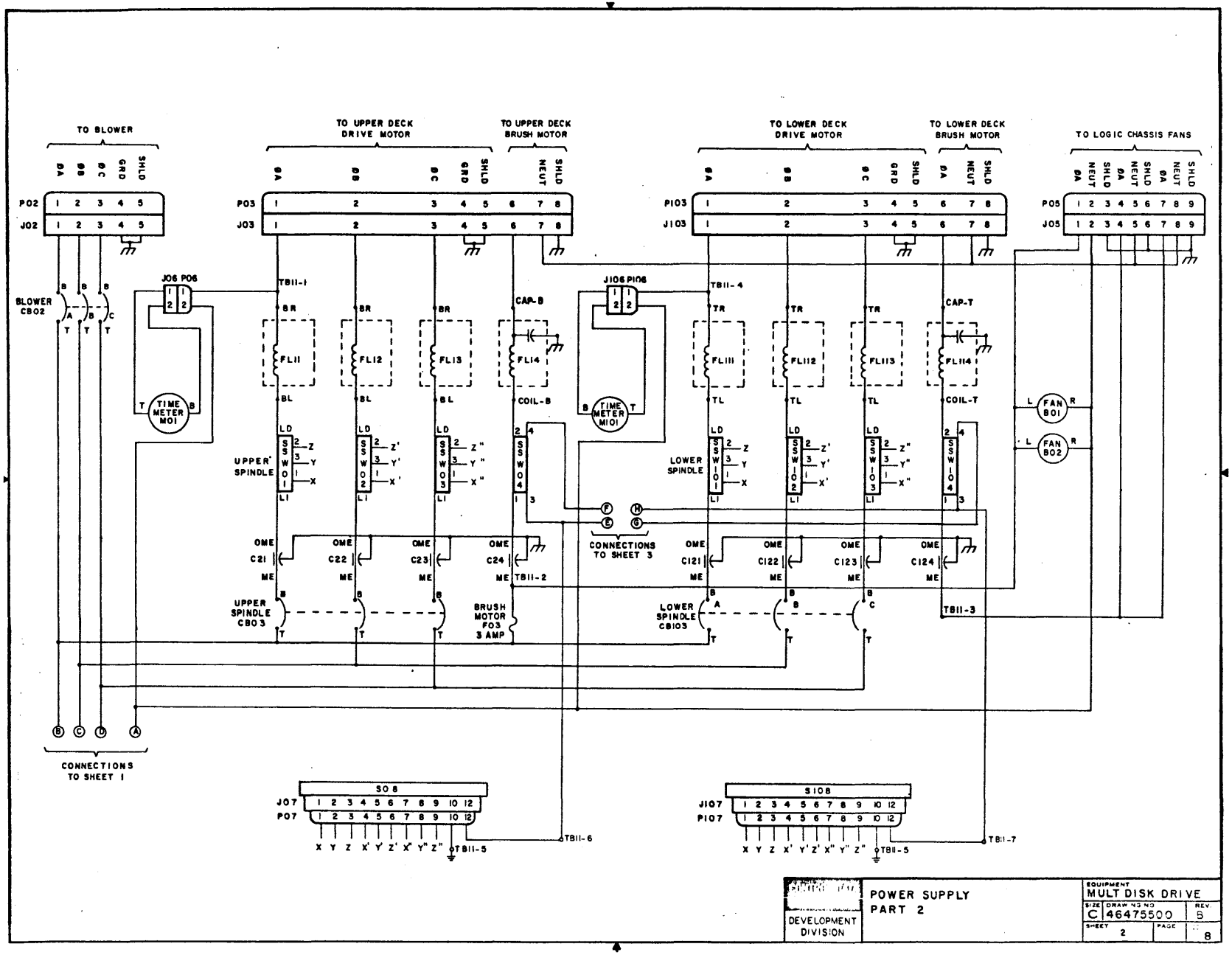
TO BLOWER
TO UPPER DECK DRIVE MOTOR
TO UPPER DECK BRUSH MOTOR
TO LOWER DECK DRIVE MOTOR
TO LOWER DECK BRUSH MOTOR
TO LOGIC CHASSIS FANS
ØA ØB ØC GRD SHLD
NEUT
P02 J02
P03 J03
P103 J103
P05 J05
BLOWER CB02
J06 P06
J106 P106
TIME METER M101
TB11-1
TB11-4
TB11-2
TB11-3
TB11-5
TB11-6
TB11-7
BR
TR
CAP-B
CAP-T
FL11
FL12
FL13
FL14
FL111
FL112
FL113
FL114
COIL-B
COIL-T
BL
TL
LD
SSWO1
SSWO2
SSWO3
SSWO4
SSWI-01
SSWI-02
SSWI-03
SSWI-04
UPPER SPINDLE
LOWER SPINDLE
OME
C21
C22
C23
C24
C121
C122
C123
C124
ME
UPPER SPINDLE CB03
LOWER SPINDLE CB103
BRUSH MOTOR F03 3 AMP
FAN B01
FAN B02
CONNECTIONS TO SHEET 3
CONNECTIONS TO SHEET 1
S08
S108
J07 P07
J107 P107
X Y Z X' Y' Z' X" Y" Z"
DEVELOPMENT DIVISION
POWER SUPPLY PART 2
EQUIPMENT MULT DISK DRIVE
SIZE C
DRAW NO 46475500
REV S
SHEET 2
PAGE 8

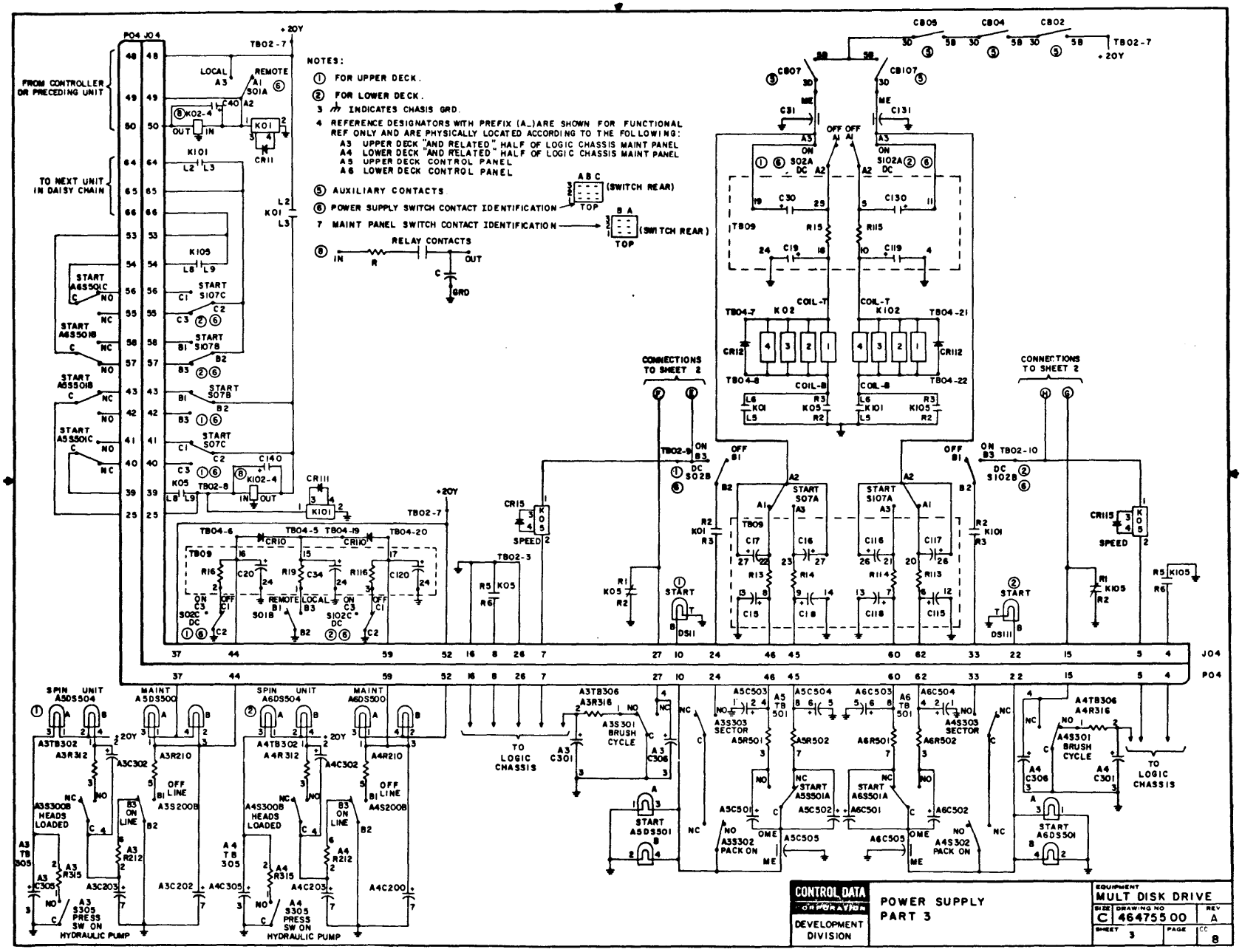
NOTES:
1 FOR UPPER DECK.
2 FOR LOWER DECK.
3 INDICATES CHASIS GRD.
4 REFERENCE DESIGNATORS WITH PREFIX (A_) ARE SHOWN FOR FUNCTIONAL REF ONLY AND ARE PHYSICALLY LOCATED ACCORDING TO THE FOLLOWING:
A3 UPPER DECK "AND RELATED" HALF OF LOGIC CHASSIS MAINT PANEL
A4 LOWER DECK "AND RELATED" HALF OF LOGIC CHASSIS MAINT PANEL
A5 UPPER DECK CONTROL PANEL
A6 LOWER DECK CONTROL PANEL
5 AUXILIARY CONTACTS
6 POWER SUPPLY SWITCH CONTACT IDENTIFICATION
7 MAINT PANEL SWITCH CONTACT IDENTIFICATION
8 RELAY CONTACTS
FROM CONTROLLER OR PRECEDING UNIT
TO NEXT UNIT IN DAISY CHAIN
+20V
LOCAL
REMOTE
CONNECTIONS TO SHEET 2
SPEED
START
HYDRAULIC PUMP
TO LOGIC CHASSIS
BRUSH CYCLE
HEADS LOADED
PACK ON
PRESS SW ON
CONTROL DATA CORPORATION
DEVELOPMENT DIVISION
POWER SUPPLY
PART 3
EQUIPMENT
MULT DISK DRIVE
SIZE C
DRAWING NO 46475500
REV A
SHEET 3
PAGE 8

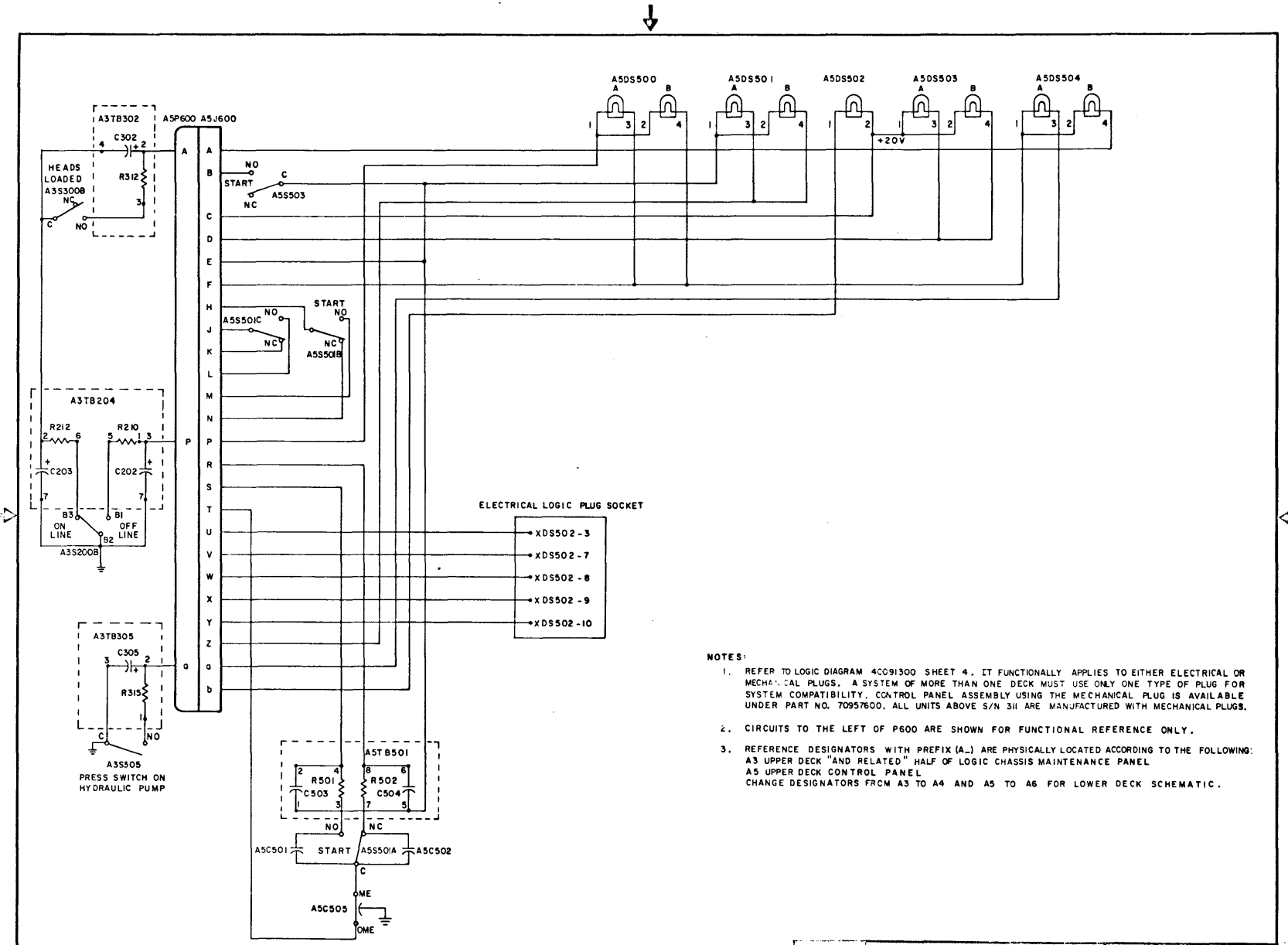

NOTES:

1. REFER TO LOGIC DIAGRAM 40091300 SHEET 4. IT FUNCTIONALLY APPLIES TO EITHER ELECTRICAL OR MECHANICAL PLUGS. A SYSTEM OF MORE THAN ONE DECK MUST USE ONLY ONE TYPE OF PLUG FOR SYSTEM COMPATIBILITY. CONTROL PANEL ASSEMBLY USING THE MECHANICAL PLUG IS AVAILABLE UNDER PART NO. 70957600. ALL UNITS ABOVE S/N 311 ARE MANUFACTURED WITH MECHANICAL PLUGS.
2. CIRCUITS TO THE LEFT OF P600 ARE SHOWN FOR FUNCTIONAL REFERENCE ONLY.
3. REFERENCE DESIGNATORS WITH PREFIX (A_) ARE PHYSICALLY LOCATED ACCORDING TO THE FOLLOWING:
   A3 UPPER DECK "AND RELATED" HALF OF LOGIC CHASSIS MAINTENANCE PANEL
   A5 UPPER DECK CONTROL PANEL
   CHANGE DESIGNATORS FROM A3 TO A4 AND A5 TO A6 FOR LOWER DECK SCHEMATIC.

DEVELOPMENT DIVISION	MDD OPERATOR CONTROL PANEL	CODE IDENT C	DWG NO 70808300	REV B
			SHEET 1	PAGE

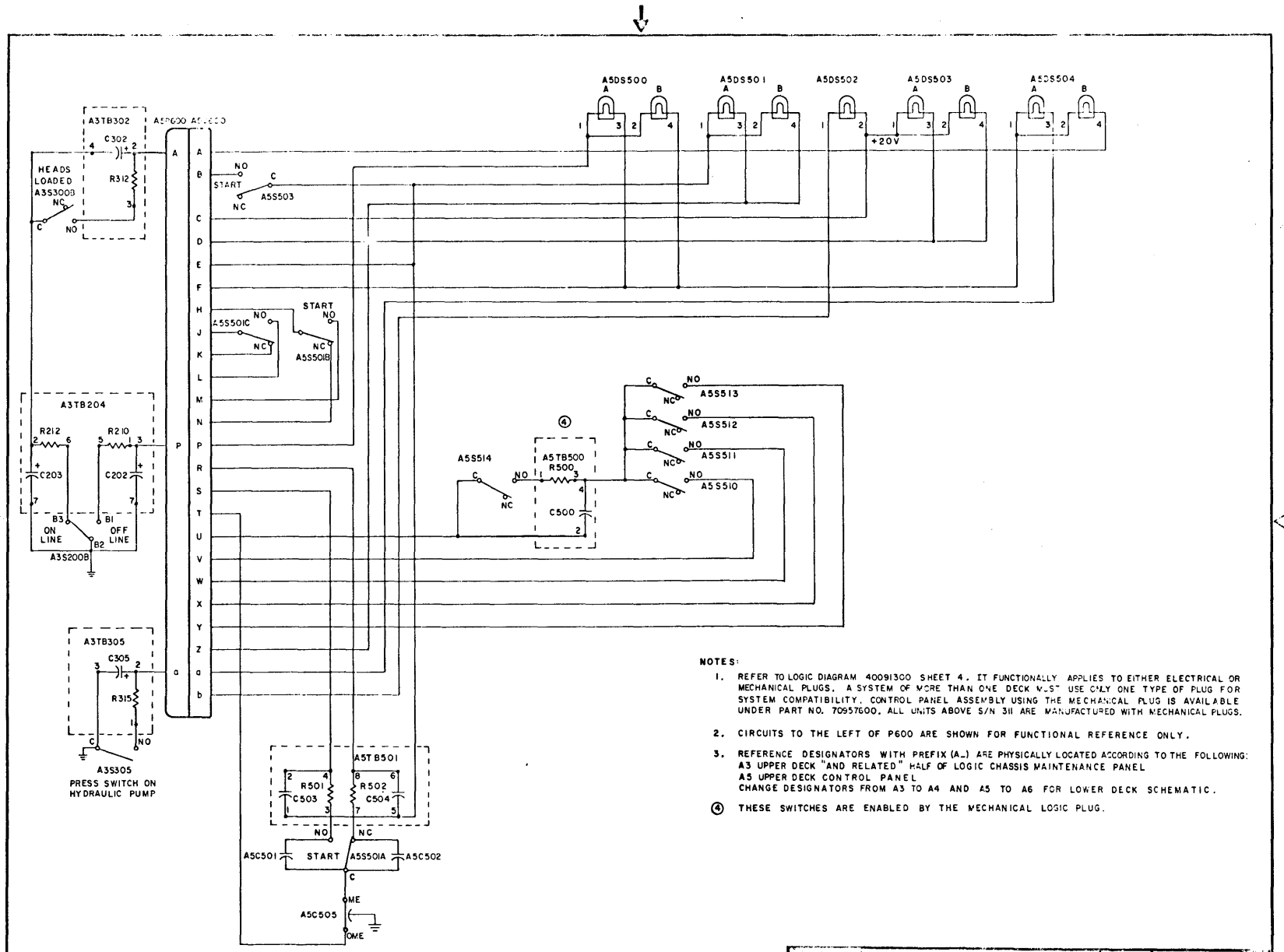

NOTES:

1. REFER TO LOGIC DIAGRAM 40091300 SHEET 4. IT FUNCTIONALLY APPLIES TO EITHER ELECTRICAL OR MECHANICAL PLUGS. A SYSTEM OF MORE THAN ONE DECK MUST USE ONLY ONE TYPE OF PLUG FOR SYSTEM COMPATIBILITY. CONTROL PANEL ASSEMBLY USING THE MECHANICAL PLUG IS AVAILABLE UNDER PART NO. 70957600. ALL UNITS ABOVE S/N 311 ARE MANUFACTURED WITH MECHANICAL PLUGS.
2. CIRCUITS TO THE LEFT OF P600 ARE SHOWN FOR FUNCTIONAL REFERENCE ONLY.
3. REFERENCE DESIGNATORS WITH PREFIX (A_) ARE PHYSICALLY LOCATED ACCORDING TO THE FOLLOWING:
   A3 UPPER DECK "AND RELATED" HALF OF LOGIC CHASSIS MAINTENANCE PANEL
   A5 UPPER DECK CONTROL PANEL
   CHANGE DESIGNATORS FROM A3 TO A4 AND A5 TO A6 FOR LOWER DECK SCHEMATIC.

④ THESE SWITCHES ARE ENABLED BY THE MECHANICAL LOGIC PLUG.

DEVELOPMENT DIVISION	MDD OPERATOR CONTROL PANEL	CODE IDENT	DWG NO 70808300	REV B
		C	SHEET 2	PAGE

REVISIONS					
SYM	ECO	ZONE	DESCRIPTION	DATE	APPROVAL
A			RELEASED		

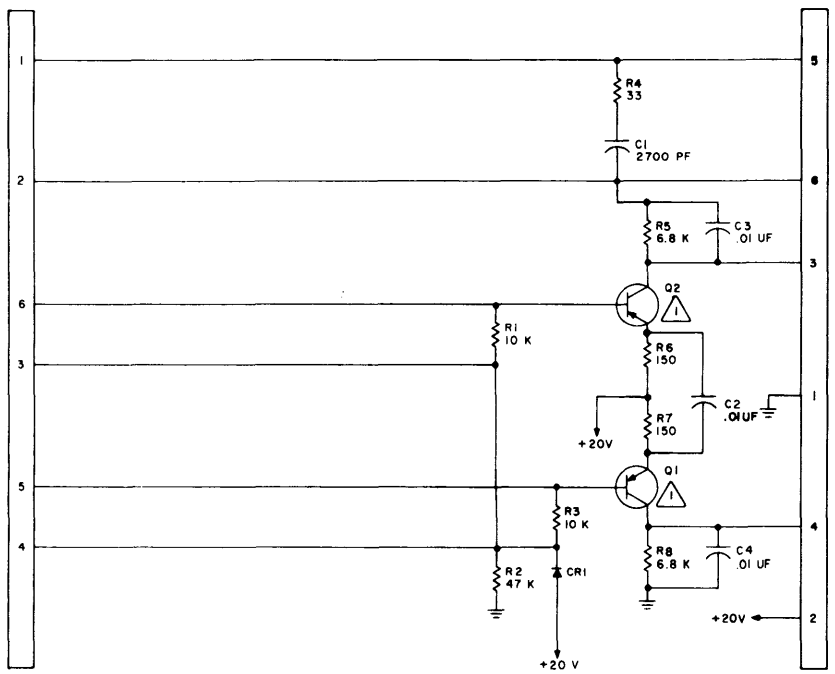

NOTES:

1. TRANSISTOR, MATCHED PAIR, 2N3638, 50210602.
2. DIODE SILICON, 92115023.
3. COMPONENT ASSY 40021200.
4. FOR TRANSDUCER PIN CONNECTIONS SEE 40058600.

40021300 A

LIST OF MATERIAL

UNLESS OTHERWISE SPECIFIED			
COMPONENTS	Tolerance	Value	Size
RESISTORS	±5%	OHMS	1/4 W
CAPACITORS	±10%		
DIODES			

	BY	DATE
DRAWN	Ja. Jamoral	2-29-68
CHECKED		3-22-68
ENGR		12-5-68
PROD ENGR		12-16-68
QC		12-16-68
PROJECT		

APPLICATION | QTY. REQD.

TITLE: SCHEMATIC DIAGRAM PREAMP SECTOR DETECTION

CONTROL DATA CORPORATION
PERIPHERAL EQUIPMENT DIVISION
7801 COMPUTER AVENUE
MINNEAPOLIS 24 MINNESOTA

REFERENCE DRAWINGS	
PRINTED CIRCUIT	40021101
COMPONENT LAYOUT	40021200

DWG SIZE: C

DWG NO. 40021300

SHEET 1 OF 1

SHEET REVISION STATUS	REVISION RECORD					
	REV	ECO	DESCRIPTION	DRFT	DATE	CHKD
	A		RELEASED		[illegible]	

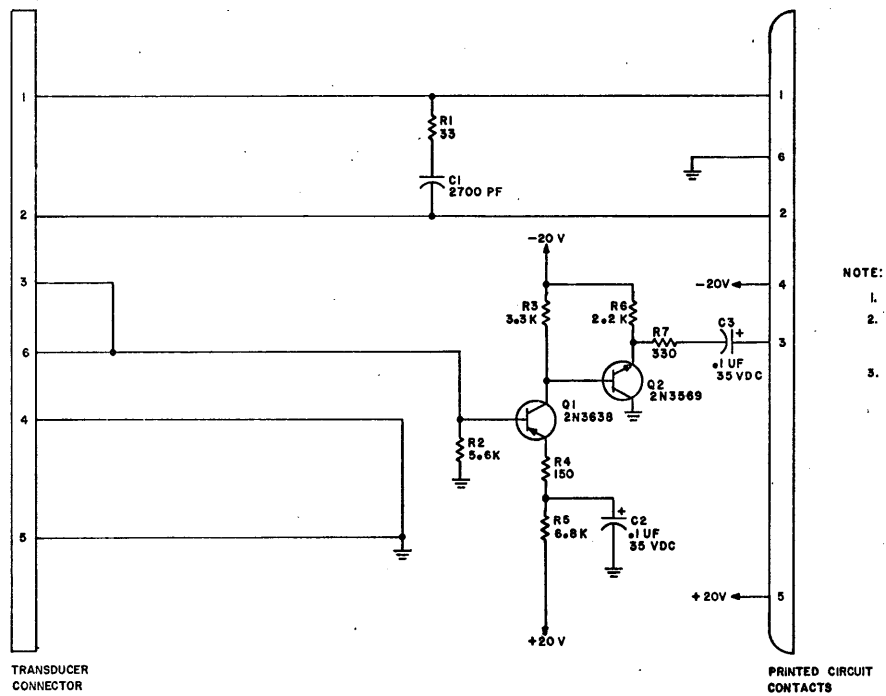

NOTE:

1. ALL TSTR, SILICON
2. FOR TRANSDUCER PIN CONNECTIONS SEE 40058700
3. COMPONENT ASS'Y 40021501.

REFERENCE DRAWINGS	CONTROL DATA	NORMANDALE DIVISION	TITLE
	FIRST USED ON		SCHEMATIC DIAGRAM PREAMP CYLINDER DETECTOR
	DWN	D. MESKE	3-24-70
	CHK	[illegible]	4.1.70
	ENGR	[illegible]	4.1.70
	MFG	[illegible]	4-6-70
	APPR	[illegible]	[illegible]

COMPONENTS, EXCEPT AS NOTED	TOLERANCE	VALUE	RATING
RES	5 %	OHMS	1/4 W
CAP	10 %		

CODE IDENT 19333 | C | DRAWING NUMBER 40021601

SHEET 1 OF 1

B40021601

REVISIONS					
SYM	ECO	ZONE	DESCRIPTION	DATE	APPROVAL
A			RELEASED		

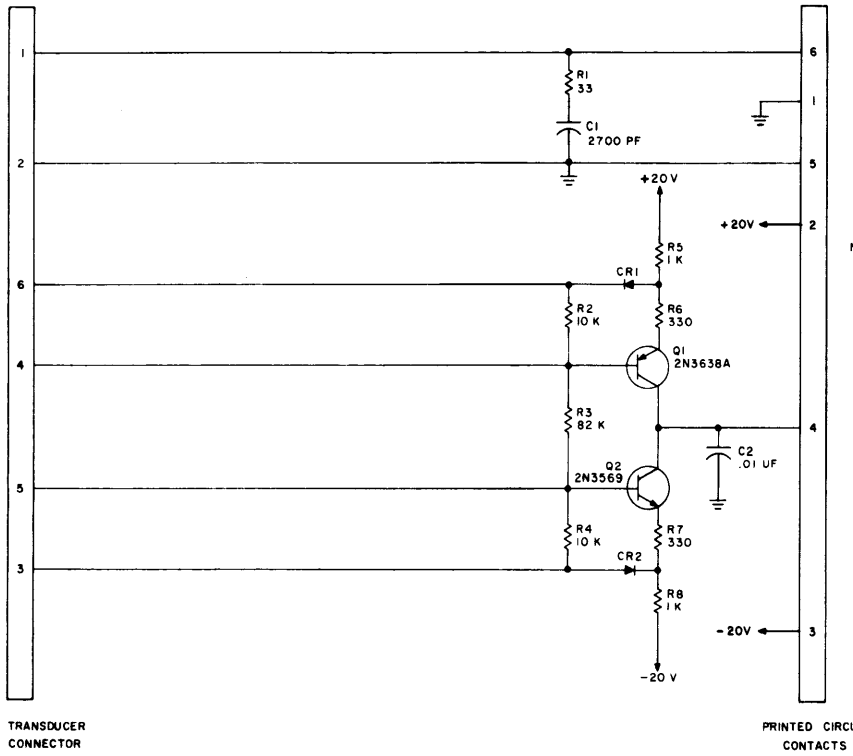

TRANSDUCER CONNECTOR

PRINTED CIRCUIT CONTACTS

NOTES.

1. ALL TRANSISTORS ARE SILICON.
2. ALL DIODES ARE SILICON 92115023.
3. COMPONENT ASSY 40021800.
4. FOR TRANSDUCER PIN CONNECTIONS SEE 40058701.

40021900 A

LIST OF MATERIAL				APPLICATION	QTY. REQD.
UNLESS OTHERWISE SPECIFIED					
COMPONENTS	Tolerance	Value	Size		
RESISTORS	±5%	OHMS	1/4 W		
CAPACITORS	±10%				
DIODES					

	BY	DATE
DRAWN	Jo JAMORAL	2-29-68
CHECKED		
ENGR		
PROD ENGR		
QC		
PROJECT		

SCHEMATIC DIAGRAM
PREAMP DETENT SENSING

CONTROL DATA CORPORATION
PERIPHERAL EQUIPMENT DIVISION
7801 COMPUTER AVENUE
MINNEAPOLIS 24, MINNESOTA

REFERENCE DRAWINGS	
PRINTED CIRCUIT	40021700
COMPONENT LAYOUT	40021800

DWG SIZE C

DWG NO. 40021900

SHEET 1 OF 1

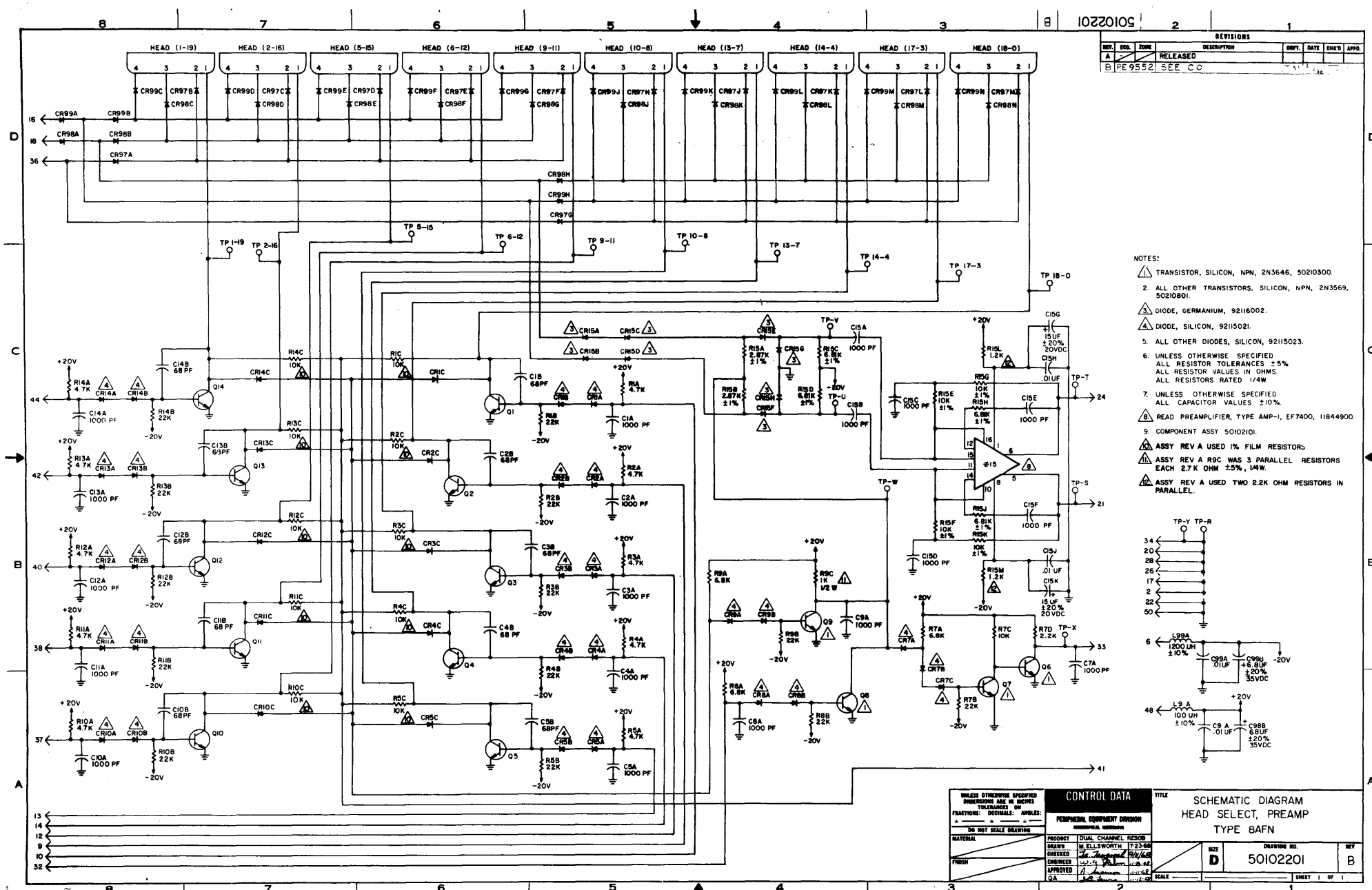

REVISIONS						
REV.	ECO.	ZONE	DESCRIPTION	DRFT.	DATE	CHK'D	APPD.
A			RELEASED				
B	PE9552		SEE CO				

NOTES:

1. TRANSISTOR, SILICON, NPN, 2N3646, 50210300.
2. ALL OTHER TRANSISTORS, SILICON, NPN, 2N3569, 50210801.
3. DIODE, GERMANIUM, 92116002.
4. DIODE, SILICON, 92115021.
5. ALL OTHER DIODES, SILICON, 92115023.
6. UNLESS OTHERWISE SPECIFIED
   ALL RESISTOR TOLERANCES ±5%
   ALL RESISTOR VALUES IN OHMS.
   ALL RESISTORS RATED 1/4W.
7. UNLESS OTHERWISE SPECIFIED
   ALL CAPACITOR VALUES ±10%.
8. READ PREAMPLIFIER, TYPE AMP-I, EF7400, 11844900.
9. COMPONENT ASSY 50102101.

1. ASSY REV A USED 1% FILM RESISTORS
2. ASSY REV A R9C WAS 3 PARALLEL RESISTORS EACH 2.7K OHM ±5%, 1/4W.
3. ASSY REV A USED TWO 2.2K OHM RESISTORS IN PARALLEL.

UNLESS OTHERWISE SPECIFIED DIMENSIONS ARE IN INCHES
TOLERANCES ON
FRACTIONS: DECIMALS: ANGLES:
DO NOT SCALE DRAWING
MATERIAL
FINISH

CONTROL DATA
PERIPHERAL EQUIPMENT DIVISION

PRODUCT	DUAL CHANNEL R/SOB	
DRAWN	M. ELLSWORTH	7-23-68
CHECKED		
ENGINEER		
APPROVED		
QA		

TITLE
SCHEMATIC DIAGRAM
HEAD SELECT, PREAMP
TYPE 8AFN

SIZE D | DRAWING NO. 50102201 | REV B
SCALE | SHEET 1 OF 1

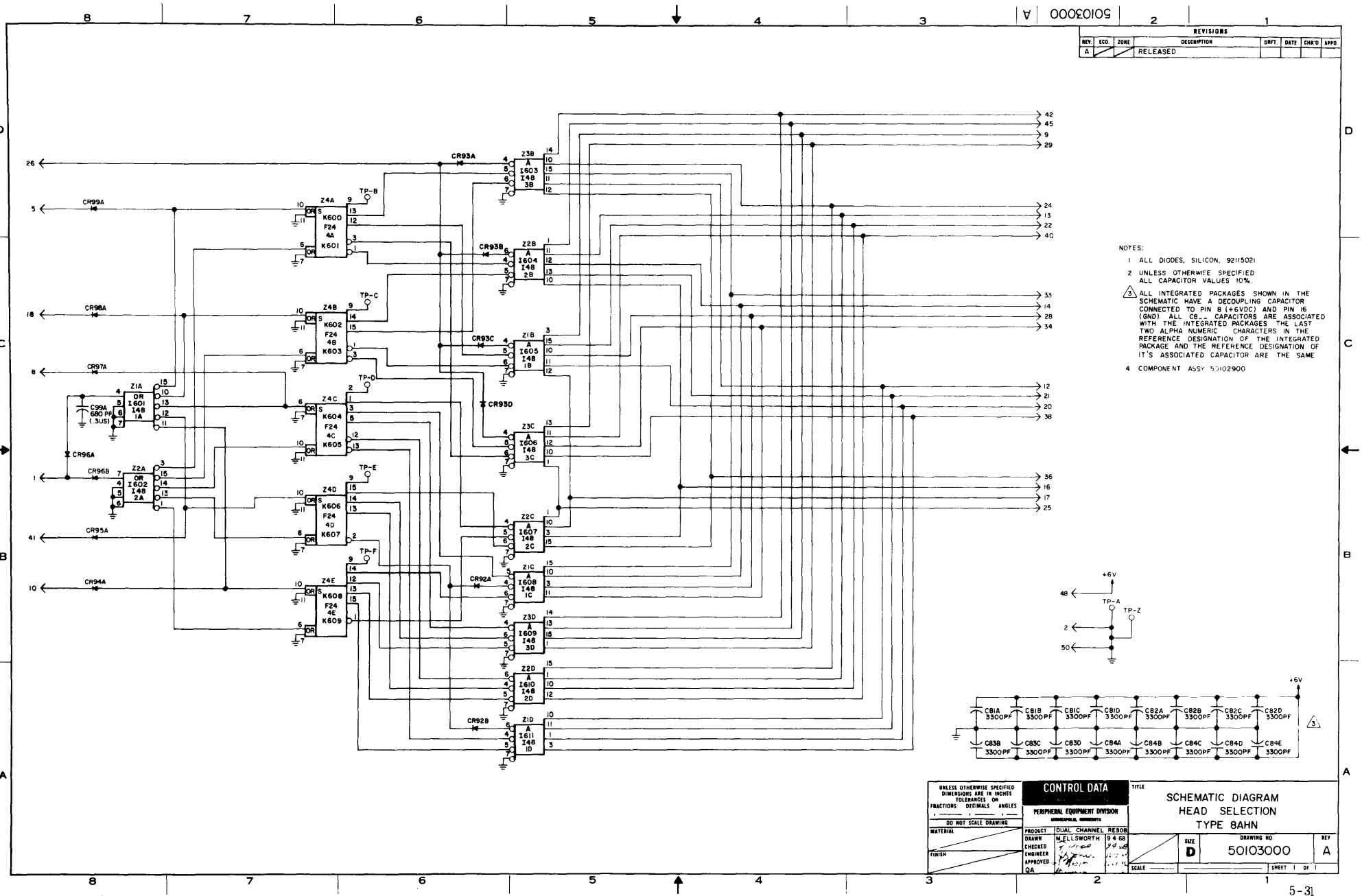
REVISIONS
REV. ECO. ZONE DESCRIPTION DRFT. DATE CHK'D APPD
A RELEASED
50103000 A
NOTES:
1 ALL DIODES, SILICON, 92115021
2 UNLESS OTHERWISE SPECIFIED ALL CAPACITOR VALUES 10%
3 ALL INTEGRATED PACKAGES SHOWN IN THE SCHEMATIC HAVE A DECOUPLING CAPACITOR CONNECTED TO PIN 8 (+6VDC) AND PIN 16 (GND) ALL C8__ CAPACITORS ARE ASSOCIATED WITH THE INTEGRATED PACKAGES THE LAST TWO ALPHA NUMERIC CHARACTERS IN THE REFERENCE DESIGNATION OF THE INTEGRATED PACKAGE AND THE REFERENCE DESIGNATION OF IT'S ASSOCIATED CAPACITOR ARE THE SAME
4 COMPONENT ASSY 50102900
CR99A CR98A CR97A CR96A CR96B CR95A CR94A
CR93A CR93B CR93C CR93D CR92A CR92B
TP-B TP-C TP-D TP-E TP-F
TP-A TP-Z
+6V
C99A 680 PF (.3US)
C81A 3300PF C81B 3300PF C81C 3300PF C81D 3300PF C82A 3300PF C82B 3300PF C82C 3300PF C82D 3300PF
C83B 3300PF C83C 3300PF C83D 3300PF C84A 3300PF C84B 3300PF C84C 3300PF C84D 3300PF C84E 3300PF
CONTROL DATA
PERIPHERAL EQUIPMENT DIVISION
UNLESS OTHERWISE SPECIFIED DIMENSIONS ARE IN INCHES TOLERANCES ON FRACTIONS: DECIMALS ANGLES
DO NOT SCALE DRAWING
MATERIAL
FINISH
PRODUCT DUAL CHANNEL RESOB
DRAWN M.ELLSWORTH 9 4 68
CHECKED
ENGINEER
APPROVED
QA
TITLE
SCHEMATIC DIAGRAM
HEAD SELECTION
TYPE 8AHN
SIZE D
DRAWING NO 50103000
REV A
SCALE
SHEET 1 OF 1

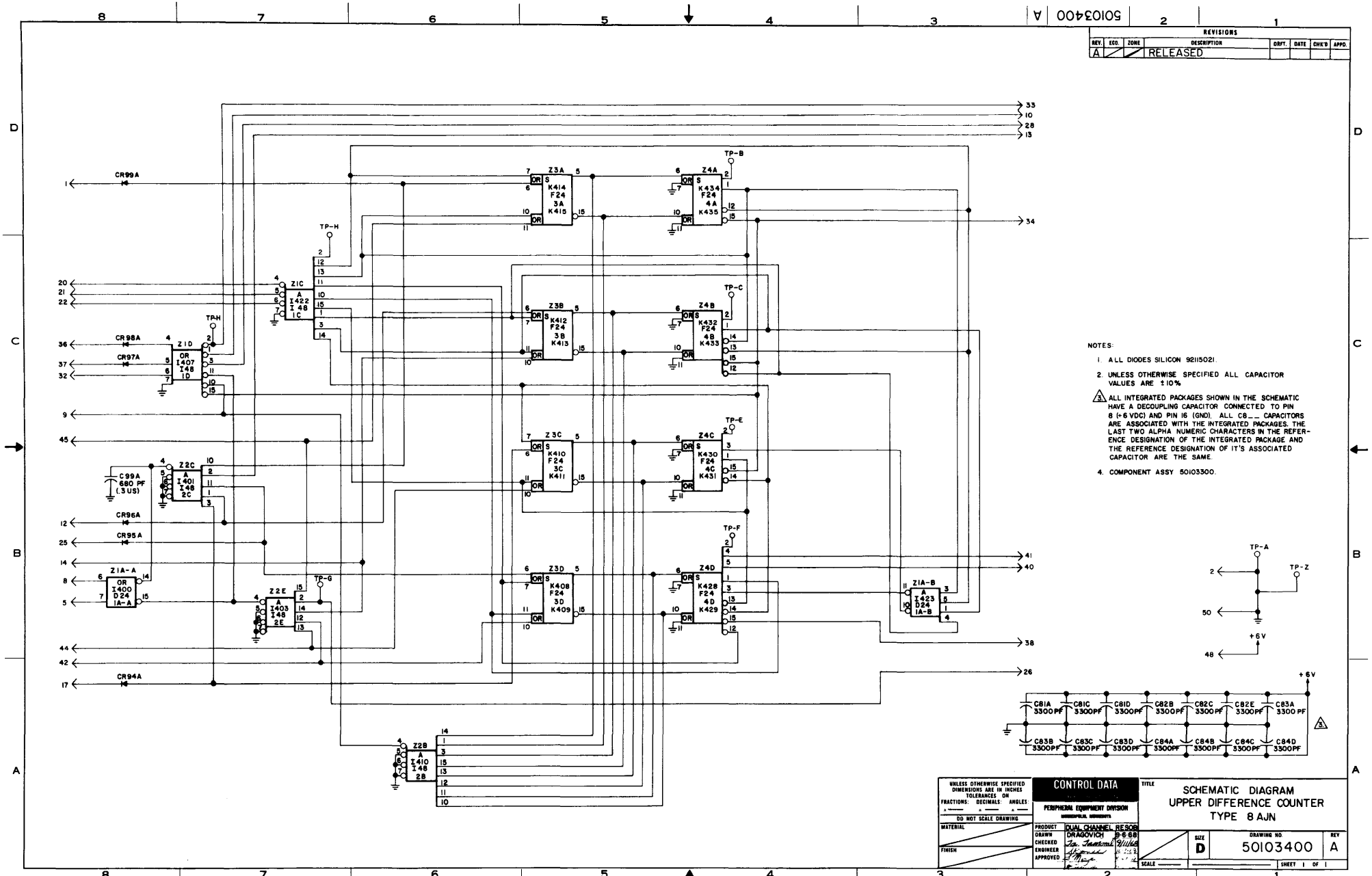
50103400 A
REVISIONS
REV. ECO. ZONE DESCRIPTION DRFT. DATE CHK'D APPD.
A RELEASED
CR99A
CR98A
CR97A
CR96A
CR95A
CR94A
C99A 680 PF (.3 US)
Z1C A I422 I 48 1C
Z1D OR I407 I48 1D
Z2C A I401 I48 2C
Z1A-A OR I400 D24 1A-A
Z2E A I403 I48 2E
Z2B A I410 I48 2B
Z3A S K414 F24 3A K415
Z3B S K412 F24 3B K413
Z3C S K410 F24 3C K411
Z3D S K408 F24 3D K409
Z4A S K434 F24 4A K435
Z4B S K432 F24 4B K433
Z4C S K430 F24 4C K431
Z4D S K428 F24 4D K429
Z1A-B A I423 D24 1A-B
TP-A
TP-B
TP-C
TP-E
TP-F
TP-G
TP-H
TP-Z
+6V
C81A 3300PF
C81C 3300PF
C81D 3300PF
C82B 3300PF
C82C 3300PF
C82E 3300PF
C83A 3300 PF
C83B 3300PF
C83C 3300PF
C83D 3300PF
C84A 3300PF
C84B 3300PF
C84C 3300PF
C84D 3300PF
NOTES:
1. ALL DIODES SILICON 9211502I.
2. UNLESS OTHERWISE SPECIFIED ALL CAPACITOR VALUES ARE ±10%
3. ALL INTEGRATED PACKAGES SHOWN IN THE SCHEMATIC HAVE A DECOUPLING CAPACITOR CONNECTED TO PIN 8 (+6 VDC) AND PIN 16 (GND). ALL C8__ CAPACITORS ARE ASSOCIATED WITH THE INTEGRATED PACKAGES. THE LAST TWO ALPHA NUMERIC CHARACTERS IN THE REFERENCE DESIGNATION OF THE INTEGRATED PACKAGE AND THE REFERENCE DESIGNATION OF IT'S ASSOCIATED CAPACITOR ARE THE SAME.
4. COMPONENT ASSY 50103300.
UNLESS OTHERWISE SPECIFIED DIMENSIONS ARE IN INCHES TOLERANCES ON FRACTIONS: DECIMALS: ANGLES:
DO NOT SCALE DRAWING
MATERIAL
FINISH
CONTROL DATA
PERIPHERAL EQUIPMENT DIVISION
PRODUCT DUAL CHANNEL RESOR
DRAWN DRAGOVICH 8-6-68
CHECKED
ENGINEER
APPROVED
TITLE
SCHEMATIC DIAGRAM
UPPER DIFFERENCE COUNTER
TYPE 8 AJN
SIZE D
DRAWING NO. 50103400
REV A
SCALE
SHEET 1 OF 1

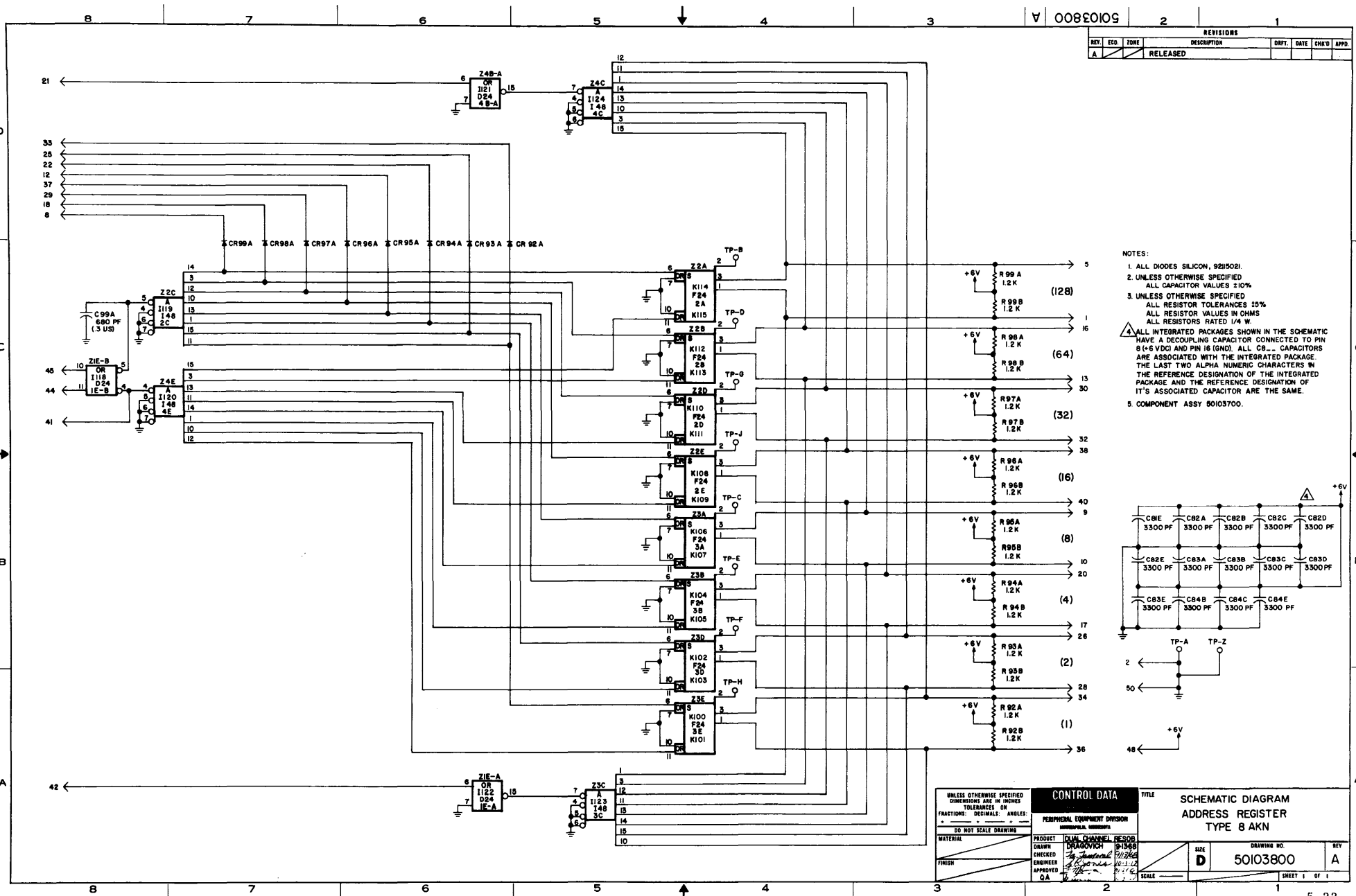
REVISIONS
REV. ECO. ZONE DESCRIPTION DRFT. DATE CHK'D APPD.
A RELEASED
50103800 A
NOTES:
1. ALL DIODES SILICON, 9211502I.
2. UNLESS OTHERWISE SPECIFIED ALL CAPACITOR VALUES ±10%
3. UNLESS OTHERWISE SPECIFIED ALL RESISTOR TOLERANCES 5% ALL RESISTOR VALUES IN OHMS ALL RESISTORS RATED 1/4 W.
4. ALL INTEGRATED PACKAGES SHOWN IN THE SCHEMATIC HAVE A DECOUPLING CAPACITOR CONNECTED TO PIN 8 (+6 VDC) AND PIN 16 (GND). ALL C8__ CAPACITORS ARE ASSOCIATED WITH THE INTEGRATED PACKAGE. THE LAST TWO ALPHA NUMERIC CHARACTERS IN THE REFERENCE DESIGNATION OF THE INTEGRATED PACKAGE AND THE REFERENCE DESIGNATION OF IT'S ASSOCIATED CAPACITOR ARE THE SAME.
5. COMPONENT ASSY 50103700.
CONTROL DATA
PERIPHERAL EQUIPMENT DIVISION
TITLE
SCHEMATIC DIAGRAM
ADDRESS REGISTER
TYPE 8 AKN
DRAWING NO. 50103800
SIZE D
REV A
SHEET 1 OF 1
DRAWN DRAGOVICH 9-1368
PRODUCT DUAL CHANNEL RESOB
UNLESS OTHERWISE SPECIFIED DIMENSIONS ARE IN INCHES TOLERANCES ON FRACTIONS: DECIMALS: ANGLES:
DO NOT SCALE DRAWING
MATERIAL
FINISH

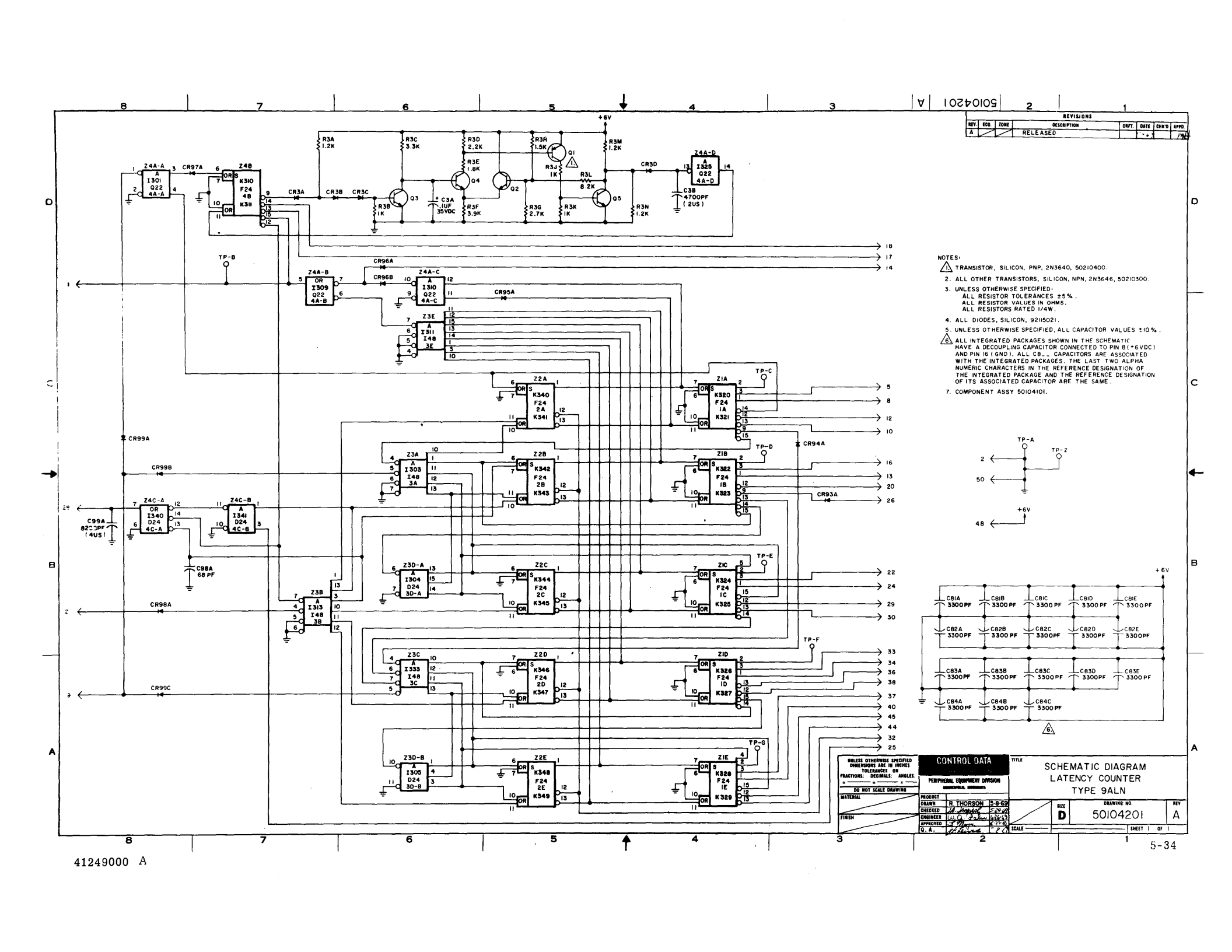
5010420 1 A
REVISIONS
REV. | ECO. | ZONE | DESCRIPTION | DRFT. | DATE | CHK'D | APPD.
A | RELEASED
+6V
R3A 1.2K
R3C 3.3K
R3D 2.2K
R3H 1.5K
R3M 1.2K
R3E 1.8K
R3J 1K
R3L 8.2K
R3B 1K
R3F 3.9K
R3G 2.7K
R3K 1K
R3N 1.2K
C3A .1UF 35VDC
C3B 4700PF (2US)
Q1
Q2
Q3
Q4
Q5
Z4A-A A I301 Q22 4A-A
Z4B K310 F24 4B K311
Z4A-B OR I309 Q22 4A-B
Z4A-C A I310 Q22 4A-C
Z4A-D A I325 Q22 4A-D
Z3E A I311 I48 3E
Z3A A I303 I48 3A
Z3B A I313 I48 3B
Z3C A I333 I48 3C
Z3D-A A I304 D24 3D-A
Z3D-B A I305 D24 3D-B
Z4C-A OR I340 D24 4C-A
Z4C-B A I344 D24 4C-B
Z2A K340 F24 2A K341
Z2B K342 F24 2B K343
Z2C K344 F24 2C K345
Z2D K346 F24 2D K347
Z2E K348 F24 2E K349
Z1A K320 F24 1A K321
Z1B K322 F24 1B K323
Z1C K324 F24 1C K325
Z1D K326 F24 1D K327
Z1E K328 F24 1E K329
CR97A
CR3A
CR3B
CR3C
CR3D
CR96A
CR96B
CR95A
CR99A
CR99B
CR99C
CR94A
CR93A
TP-A
TP-B
TP-C
TP-D
TP-E
TP-F
TP-G
TP-Z
C99A 8200PF (4US)
C98A 68 PF
C81A 3300PF
C81B 3300 PF
C81C 3300 PF
C81D 3300 PF
C81E 3300 PF
C82A 3300PF
C82B 3300 PF
C82C 3300PF
C82D 3300PF
C82E 3300PF
C83A 3300PF
C83B 3300 PF
C83C 3300 PF
C83D 3300PF
C83E 3300 PF
C84A 3300PF
C84B 3300 PF
C84C 3300 PF
NOTES:
1. TRANSISTOR, SILICON, PNP, 2N3640, 50210400.
2. ALL OTHER TRANSISTORS, SILICON, NPN, 2N3646, 50210300.
3. UNLESS OTHERWISE SPECIFIED:
ALL RESISTOR TOLERANCES ±5%.
ALL RESISTOR VALUES IN OHMS.
ALL RESISTORS RATED 1/4W.
4. ALL DIODES, SILICON, 9211502I.
5. UNLESS OTHERWISE SPECIFIED, ALL CAPACITOR VALUES ±10%.
6. ALL INTEGRATED PACKAGES SHOWN IN THE SCHEMATIC HAVE A DECOUPLING CAPACITOR CONNECTED TO PIN 8 (+6VDC) AND PIN 16 (GND). ALL C8__ CAPACITORS ARE ASSOCIATED WITH THE INTEGRATED PACKAGES. THE LAST TWO ALPHA NUMERIC CHARACTERS IN THE REFERENCE DESIGNATION OF THE INTEGRATED PACKAGE AND THE REFERENCE DESIGNATION OF ITS ASSOCIATED CAPACITOR ARE THE SAME.
7. COMPONENT ASSY 50104101.
CONTROL DATA
PERIPHERAL EQUIPMENT DIVISION
TITLE
SCHEMATIC DIAGRAM
LATENCY COUNTER
TYPE 9ALN
SIZE D
DRAWING NO. 50104201
REV A
SHEET 1 OF 1
DRAWN R. THORSON 5-8-69
CHECKED
ENGINEER
APPROVED
Q.A.
SCALE
UNLESS OTHERWISE SPECIFIED DIMENSIONS ARE IN INCHES TOLERANCES ON FRACTIONS: DECIMALS: ANGLES:
DO NOT SCALE DRAWING
MATERIAL
FINISH
PRODUCT

41249000 A

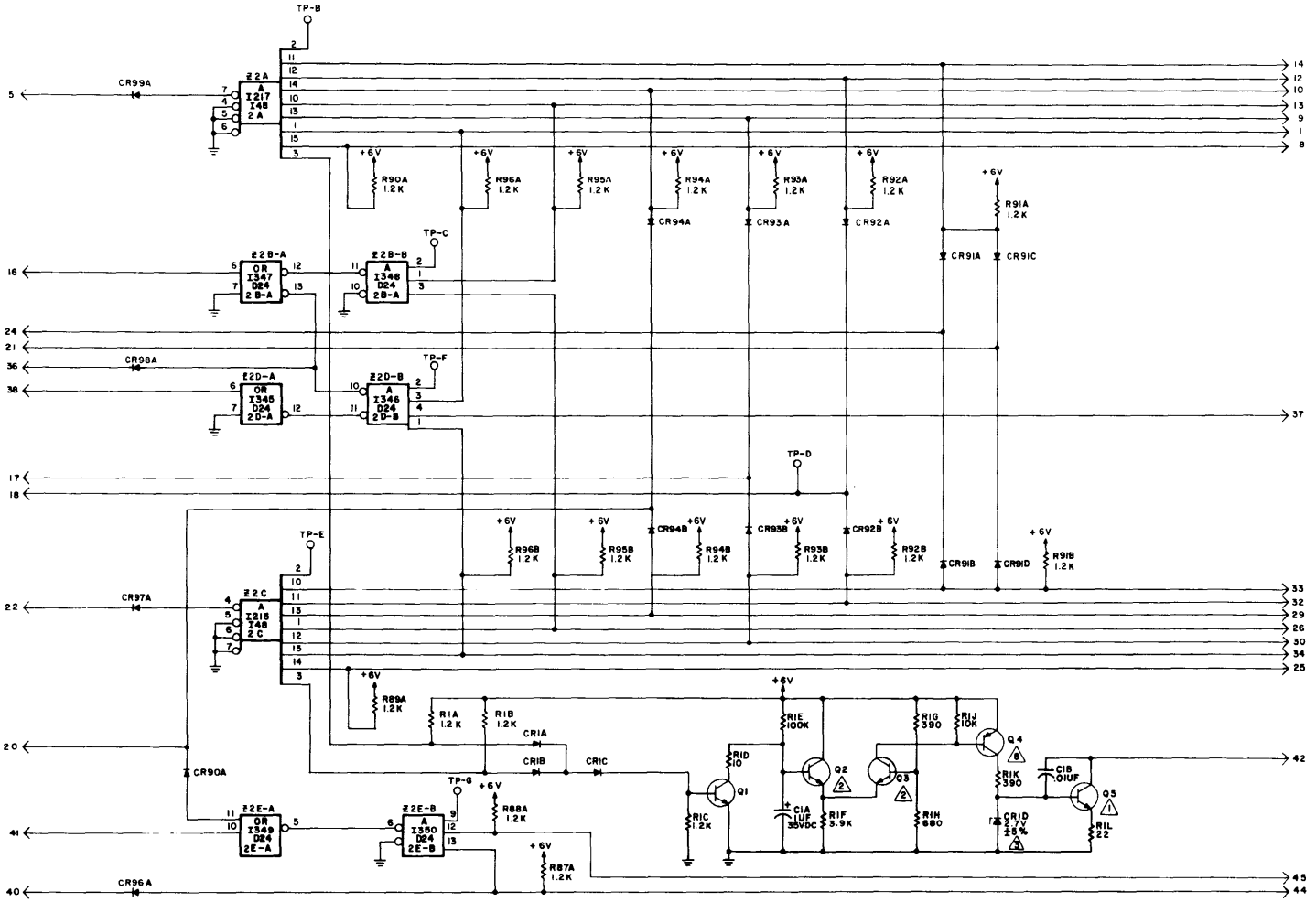

REVISIONS						
REV.	ECO.	ZONE	DESCRIPTION	DRFT.	DATE	CHK'D	APPD.
A			RELEASED				

NOTES:

1. TRANSISTOR, SILICON, NPN, 2N3569, 50210801
2. TRANSISTOR, SILICON, NPN, 2N3565, 50210700.
3. DIODE, SILICON, ZENER, 50240146.
4. ALL OTHER DIODES, SILICON, 92115021.
5. UNLESS OTHERWISE SPECIFIED ALL CAPACITOR VALUES ±10%.
6. UNLESS OTHERWISE SPECIFIED:
   ALL RESISTOR TOLERANCE ±5%
   ALL RESISTOR VALUES IN OHMS,
   ALL RESISTORS RATED 1/4 W.
7. ALL INTEGRATED PACKAGES SHOWN IN THE SCHEMATIC HAVE A DECOUPLING CAPACITOR CONNECTED TO PIN 8 (+6VDC) AND PIN 16(GND). ALL C8_ _ CAPACITORS ARE ASSOCIATED WITH INTEGRATED PACKAGES THE LAST TWO ALPHA NUMERIC CHARACTERS IN THE REFERENCE DESIGNATION OF THE INTEGRATED PACKAGE AND THE REFERENCE DESIGNATION OF IT'S ASSOCIATED CAPACITOR ARE THE SAME.
8. TRANSISTOR, SILICON, PNP, 2N3640, 50210400.
9. ALL OTHER TRANSISTORS, SILICON, NPN, 2N3646, 50210300.
10. COMPONENT ASSY 50104901.

UNLESS OTHERWISE SPECIFIED DIMENSIONS ARE IN INCHES. TOLERANCES ON FRACTIONS: DECIMALS: ANGLES:
DO NOT SCALE DRAWING
MATERIAL
FINISH

CONTROL DATA
PERIPHERAL EQUIPMENT DIVISION

PRODUCT	DUAL CHANNEL RESOB	
DRAWN	D. TUTTLE	9-3-68
CHECKED		
ENGINEER		
APPROVED		
QA		

TITLE
SCHEMATIC DIAGRAM
STEERING UNIT LOGIC
TYPE AANN

SIZE D | DRAWING NO. 50105001 | REV A
SCALE | SHEET 1 OF 1

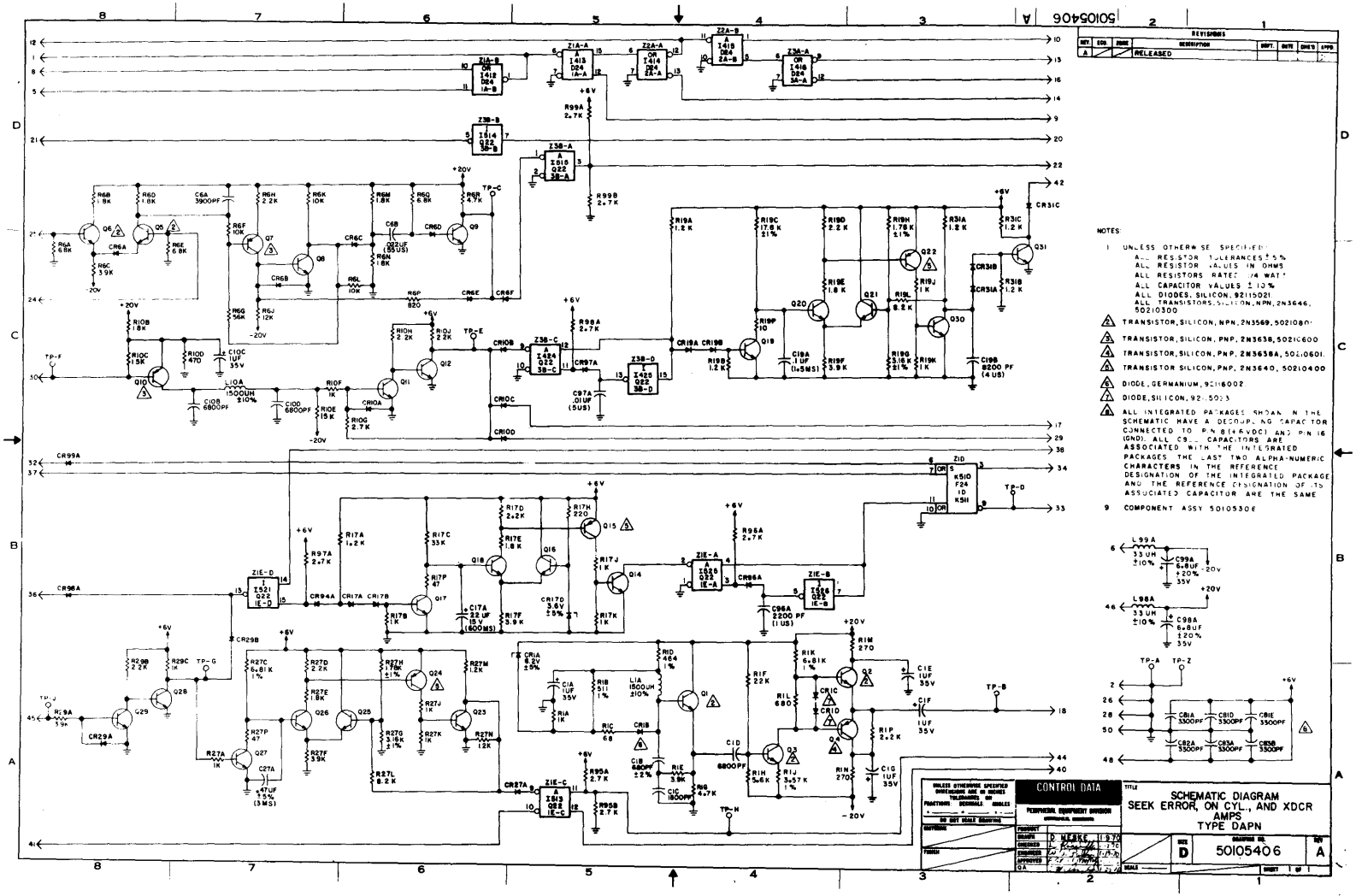
50105406
REVISIONS
RELEASED
NOTES:
1 UNLESS OTHERWISE SPECIFIED:
ALL RESISTOR TOLERANCES ± 5%
ALL RESISTOR VALUES IN OHMS
ALL RESISTORS RATED 1/4 WATT
ALL CAPACITOR VALUES ± 10%
ALL DIODES, SILICON, 92115021
ALL TRANSISTORS, SILICON, NPN, 2N3646, 50210300
2 TRANSISTOR, SILICON, NPN, 2N3569, 50210801
3 TRANSISTOR, SILICON, PNP, 2N3638, 50210600
4 TRANSISTOR, SILICON, PNP, 2N3638A, 50210601
5 TRANSISTOR SILICON, PNP, 2N3640, 50210400
6 DIODE, GERMANIUM, 92116002
7 DIODE, SILICON, 92..5033
8 ALL INTEGRATED PACKAGES SHOWN IN THE SCHEMATIC HAVE A DECOUPLING CAPACITOR CONNECTED TO PIN 8 (+6VDC) AND PIN 16 (GND). ALL C9.. CAPACITORS ARE ASSOCIATED WITH THE INTEGRATED PACKAGES. THE LAST TWO ALPHA-NUMERIC CHARACTERS IN THE REFERENCE DESIGNATION OF THE INTEGRATED PACKAGE AND THE REFERENCE DESIGNATION OF ITS ASSOCIATED CAPACITOR ARE THE SAME
9 COMPONENT ASSY 50105306
CONTROL DATA
PERIPHERAL EQUIPMENT DIVISION
SCHEMATIC DIAGRAM
SEEK ERROR, ON CYL., AND XDCR AMPS
TYPE DAPN
50105406
SIZE D
REV A

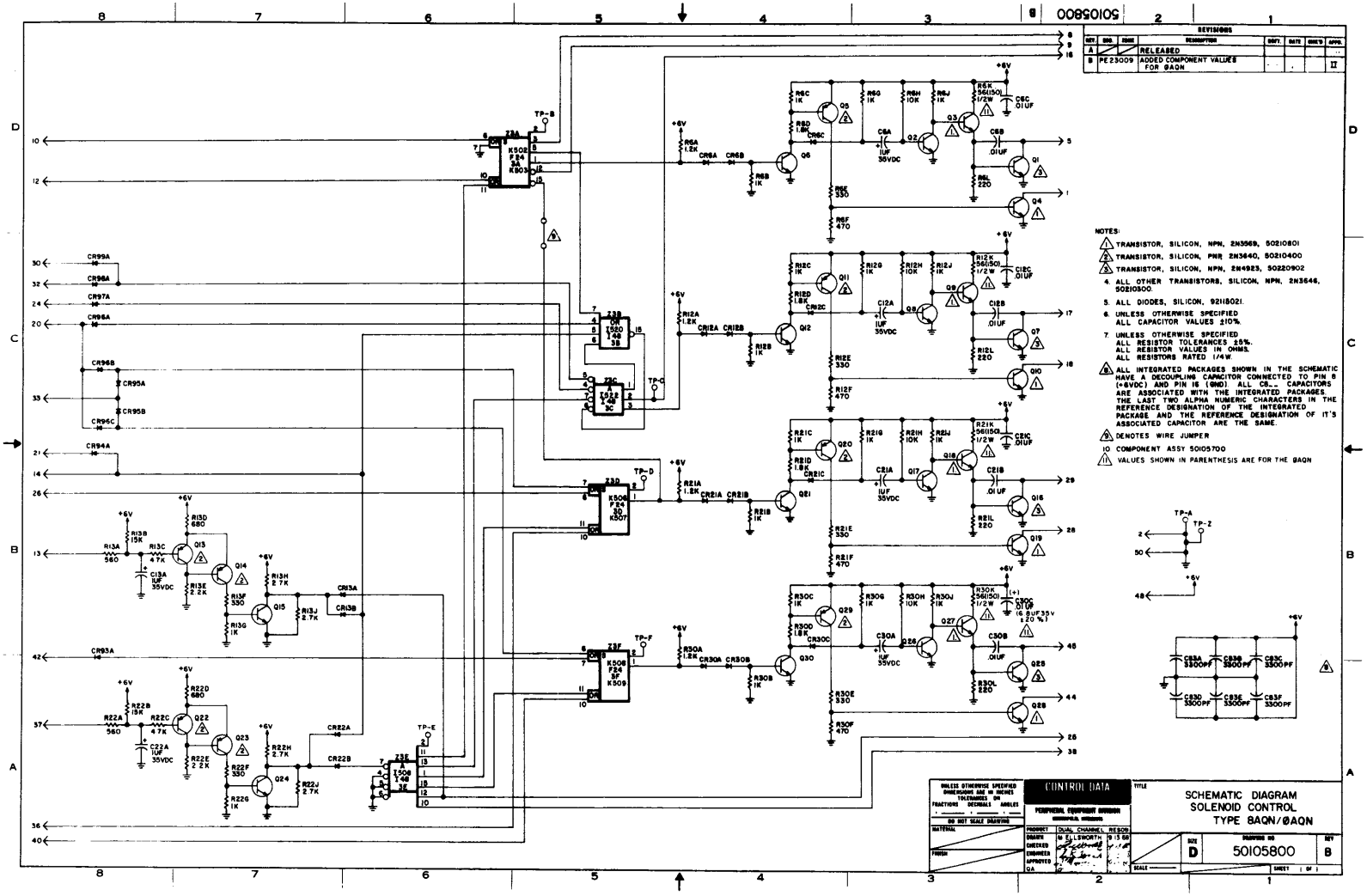
50105800
REVISIONS
A RELEASED
B PE23009 ADDED COMPONENT VALUES FOR 8AQN
NOTES:
1. TRANSISTOR, SILICON, NPN, 2N3569, 50210801
2. TRANSISTOR, SILICON, PNP, 2N3640, 50210400
3. TRANSISTOR, SILICON, NPN, 2N4923, 50220902
4. ALL OTHER TRANSISTORS, SILICON, NPN, 2N3646, 50210300.
5. ALL DIODES, SILICON, 9211802.
6. UNLESS OTHERWISE SPECIFIED ALL CAPACITOR VALUES ±10%
7. UNLESS OTHERWISE SPECIFIED ALL RESISTOR TOLERANCES ±5%. ALL RESISTOR VALUES IN OHMS. ALL RESISTORS RATED 1/4W.
6. ALL INTEGRATED PACKAGES SHOWN IN THE SCHEMATIC HAVE A DECOUPLING CAPACITOR CONNECTED TO PIN 8 (+6VDC) AND PIN 15 (GND) ALL C8-- CAPACITORS ARE ASSOCIATED WITH THE INTEGRATED PACKAGES. THE LAST TWO ALPHA NUMERIC CHARACTERS IN THE REFERENCE DESIGNATION OF THE INTEGRATED PACKAGE AND THE REFERENCE DESIGNATION OF IT'S ASSOCIATED CAPACITOR ARE THE SAME.
9. DENOTES WIRE JUMPER
10 COMPONENT ASSY 50105700
11. VALUES SHOWN IN PARENTHESIS ARE FOR THE 8AQN
CONTROL DATA
PERIPHERAL EQUIPMENT DIVISION
TITLE
SCHEMATIC DIAGRAM
SOLENOID CONTROL
TYPE 8AQN/0AQN
PRODUCT DUAL CHANNEL RESOR
DRAWN W. ELLSWORTH 9 15 69
CHECKED
ENGINEER
APPROVED
QA
SIZE D
DRAWING NO 50105800
REV B
SCALE
SHEET 1 OF 1

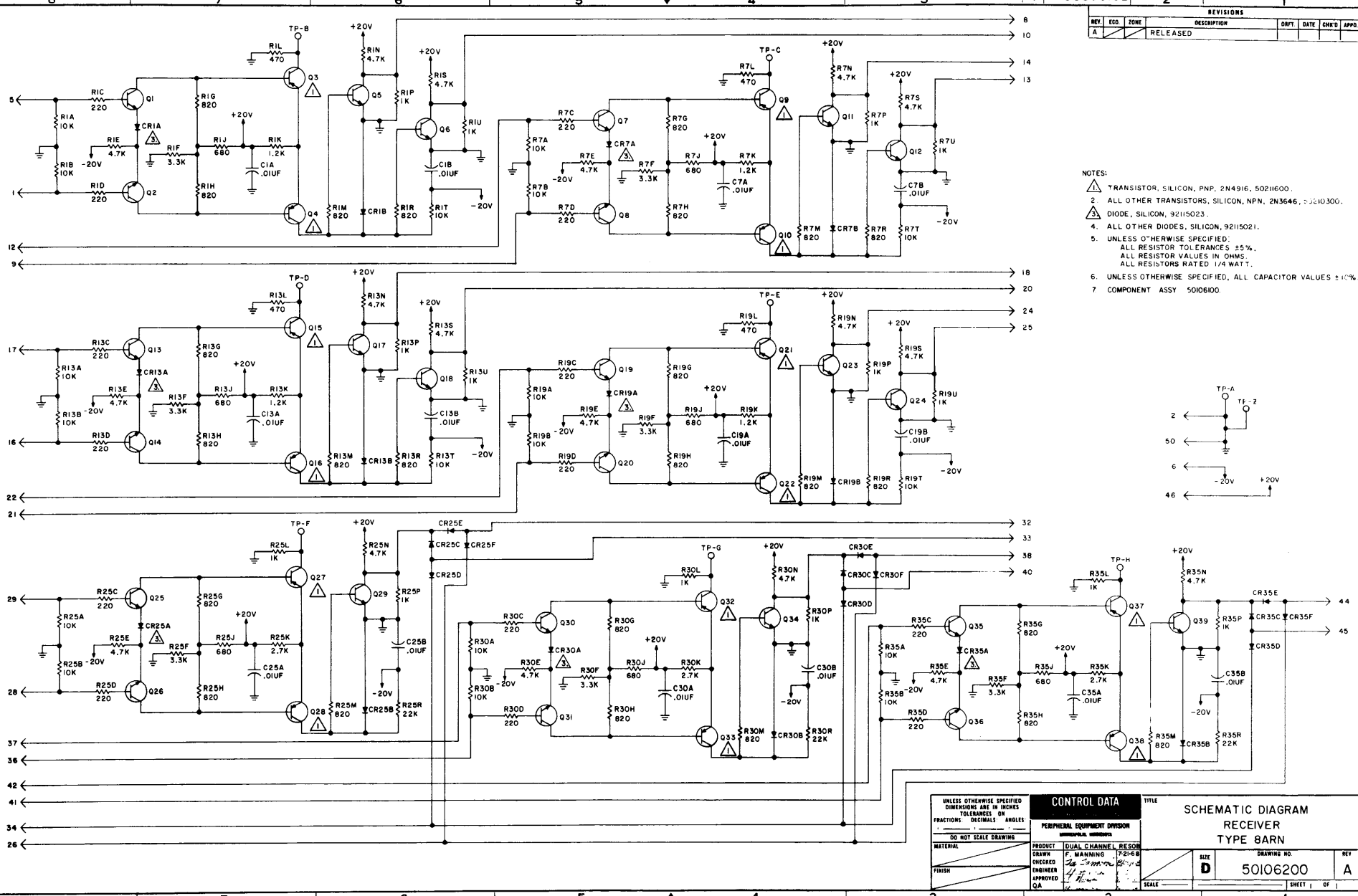
50106200
REVISIONS
REV. ECO. ZONE DESCRIPTION DRFT. DATE CHK'D APPD.
A RELEASED
NOTES:
1. TRANSISTOR, SILICON, PNP, 2N4916, 50211600.
2. ALL OTHER TRANSISTORS, SILICON, NPN, 2N3646, 50210300.
3. DIODE, SILICON, 92115023.
4. ALL OTHER DIODES, SILICON, 92115021.
5. UNLESS OTHERWISE SPECIFIED:
ALL RESISTOR TOLERANCES ±5%.
ALL RESISTOR VALUES IN OHMS.
ALL RESISTORS RATED 1/4 WATT.
6. UNLESS OTHERWISE SPECIFIED, ALL CAPACITOR VALUES ±10%.
7. COMPONENT ASSY 50106100.
TP-A
TP-B
TP-C
TP-D
TP-E
TP-F
TP-G
TP-H
+20V
-20V
CONTROL DATA
PERIPHERAL EQUIPMENT DIVISION
TITLE
SCHEMATIC DIAGRAM
RECEIVER
TYPE 8ARN
PRODUCT DUAL CHANNEL RESOR
DRAWN F. MANNING 7-21-67
CHECKED
ENGINEER
APPROVED
QA
SIZE D
DRAWING NO. 50106200
REV A
SCALE
SHEET 1 OF 1
DO NOT SCALE DRAWING
MATERIAL
FINISH

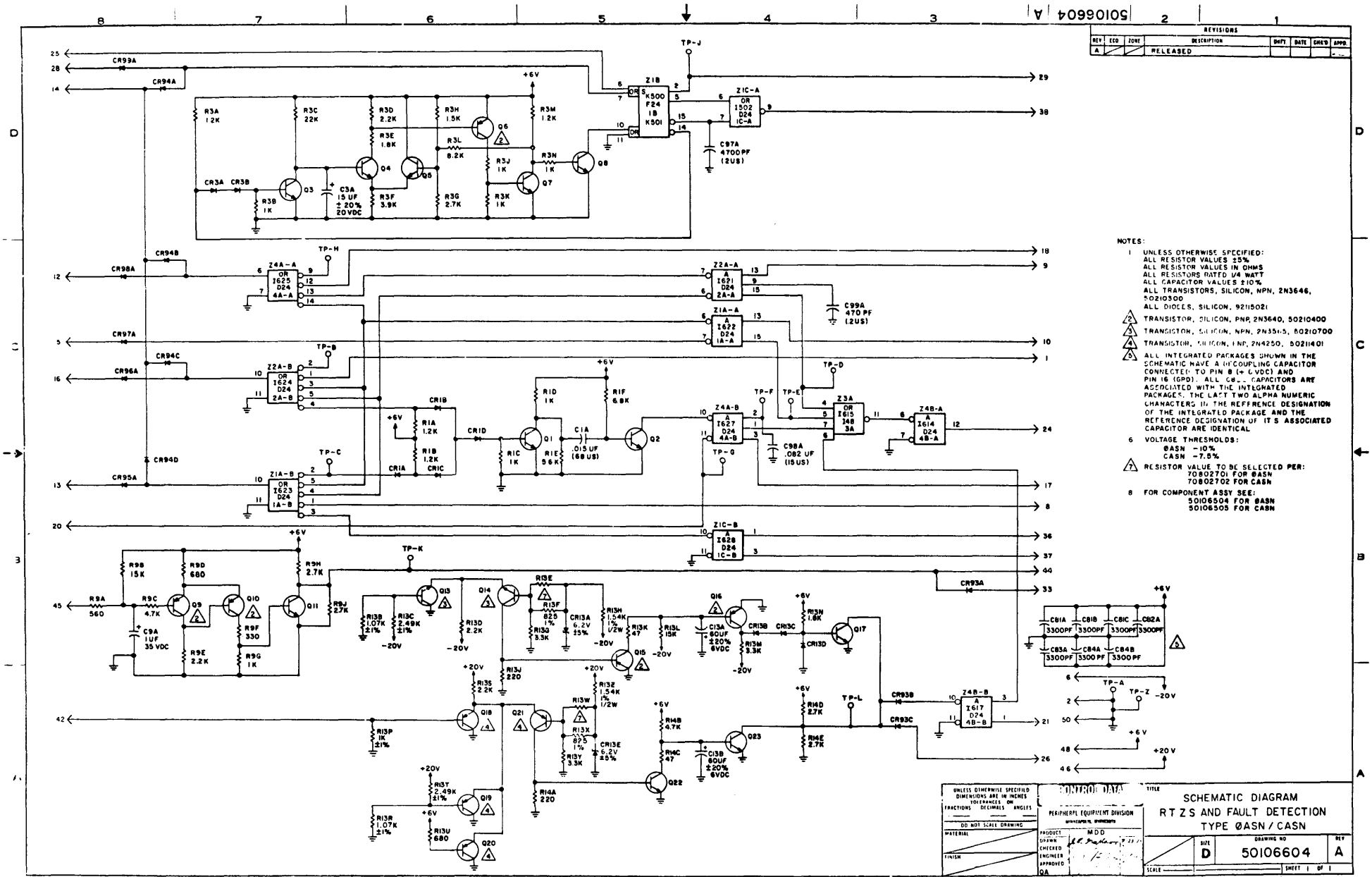
50106604 A
REVISIONS
REV | ECO | ZONE | DESCRIPTION | DRFT | DATE | CHK'D | APPD
A | | | RELEASED
NOTES:
1 UNLESS OTHERWISE SPECIFIED:
ALL RESISTOR VALUES ±5%
ALL RESISTOR VALUES IN OHMS
ALL RESISTORS RATED 1/4 WATT
ALL CAPACITOR VALUES ±10%
ALL TRANSISTORS, SILICON, NPN, 2N3646, 50210300
ALL DIODES, SILICON, 9211502
2 TRANSISTOR, SILICON, PNP, 2N3640, 50210400
3 TRANSISTOR, SILICON, NPN, 2N3565, 50210700
4 TRANSISTOR, SILICON, UNF, 2N4250, 50211401
5 ALL INTEGRATED PACKAGES SHOWN IN THE SCHEMATIC HAVE A DECOUPLING CAPACITOR CONNECTED TO PIN 8 (+ 6VDC) AND PIN 16 (GPD). ALL C8.. CAPACITORS ARE ASSOCIATED WITH THE INTEGRATED PACKAGES. THE LAST TWO ALPHA NUMERIC CHARACTERS IN THE REFFRENCE DESIGNATION OF THE INTEGRATED PACKAGE AND THE REFERENCE DESIGNATION OF IT S ASSOCIATED CAPACITOR ARE IDENTICAL
6 VOLTAGE THRESHOLDS:
@ASN -10%
CASN -7.5%
7 RESISTOR VALUE TO BE SELECTED PER:
70802701 FOR @ASN
70802702 FOR CASN
8 FOR COMPONENT ASSY SEE:
50106504 FOR @ASN
50106505 FOR CASN
TP-J
TP-H
TP-B
TP-C
TP-D
TP-E
TP-F
TP-G
TP-K
TP-L
TP-A
TP-Z
+6V
+20V
-20V
CR99A
CR94A
CR98B
CR98A
CR97A
CR94C
CR96A
CR95A
CR94D
CR93A
CR93B
CR93C
Z1B K500 F24 1B K501
Z1C-A 1502 D24 1C-A
Z4A-A 1625 D24 4A-A
Z2A-A 1621 D24 2A-A
Z1A-A 1622 D24 1A-A
Z2A-B 1624 D24 2A-B
Z4A-B 1627 D24 4A-B
Z3A 1615 348 3A
Z4B-A 1614 D24 4B-A
Z1A-B 1623 D24 1A-B
Z1C-B 1628 D24 1C-B
Z4B-B 1617 D24 4B-B
R3A 12K
R3C 22K
R3D 2.2K
R3H 1.5K
R3M 1.2K
R3E 1.8K
R3L 8.2K
R3J 1K
R3N 1K
R3B 1K
R3F 3.9K
R3G 2.7K
R3K 1K
C3A 15 UF ± 20% 20VDC
C97A 4700PF (2US)
C99A 470 PF (2US)
C98A .082 UF (15US)
C1A .015 UF (68 US)
R1A 1.2K
R1B 1.2K
R1C 1K
R1D 1K
R1E 5.6K
R1F 6.8K
CR1A
CR1B
CR1C
CR1D
Q1
Q2
R9A 560
R9B 15K
R9C 4.7K
R9D 680
R9E 2.2K
R9F 330
R9G 1K
R9H 2.7K
R9J 2.7K
C9A 1UF 35 VDC
Q9
Q10
Q11
R13B 1.07K ±1%
R13C 2.49K ±1%
R13D 2.2K
R13E 825 1%
R13F 825 1%
R13G 3.3K
R13H 1.54K 1% 1/2W
R13K 47
R13L 15K
R13M 3.3K
R13N 1.6K
C13A 60UF ±20% 6VDC
C13B 60UF ±20% 6VDC
CR13A 6.2V ±5%
CR13B
CR13C
CR13D
CR13E 6.2V ±5%
Q13
Q14
Q15
Q16
Q17
R13J 220
R13P 1K ±1%
R13R 1.07K ±1%
R13S 2.49K ±1%
R13T 2.49K ±1%
R13U 680
R13V 3.3K
R13W
R13X 825 1%
R13Z 1.54K 1% 1/2W
R14A 220
R14B 4.7K
R14C 47
R14D 2.7K
R14E 2.7K
Q18
Q19
Q20
Q21
Q22
Q23
C81A 3300PF
C81B 3300PF
C81C 3300PF
C82A 3300PF
C83A 3300PF
C84A 3300 PF
C84B 3300PF
UNLESS OTHERWISE SPECIFIED DIMENSIONS ARE IN INCHES TOLERANCES ON FRACTIONS DECIMALS ANGLES
DO NOT SCALE DRAWING
MATERIAL
FINISH
CONTROL DATA
PERIPHERAL EQUIPMENT DIVISION
MINNEAPOLIS, MINNESOTA
PRODUCT MDD
DRAWN
CHECKED
ENGINEER
APPROVED
QA
TITLE
SCHEMATIC DIAGRAM
RTZS AND FAULT DETECTION
TYPE ØASN / CASN
SIZE D
DRAWING NO 50106604
REV A
SCALE
SHEET 1 OF 1

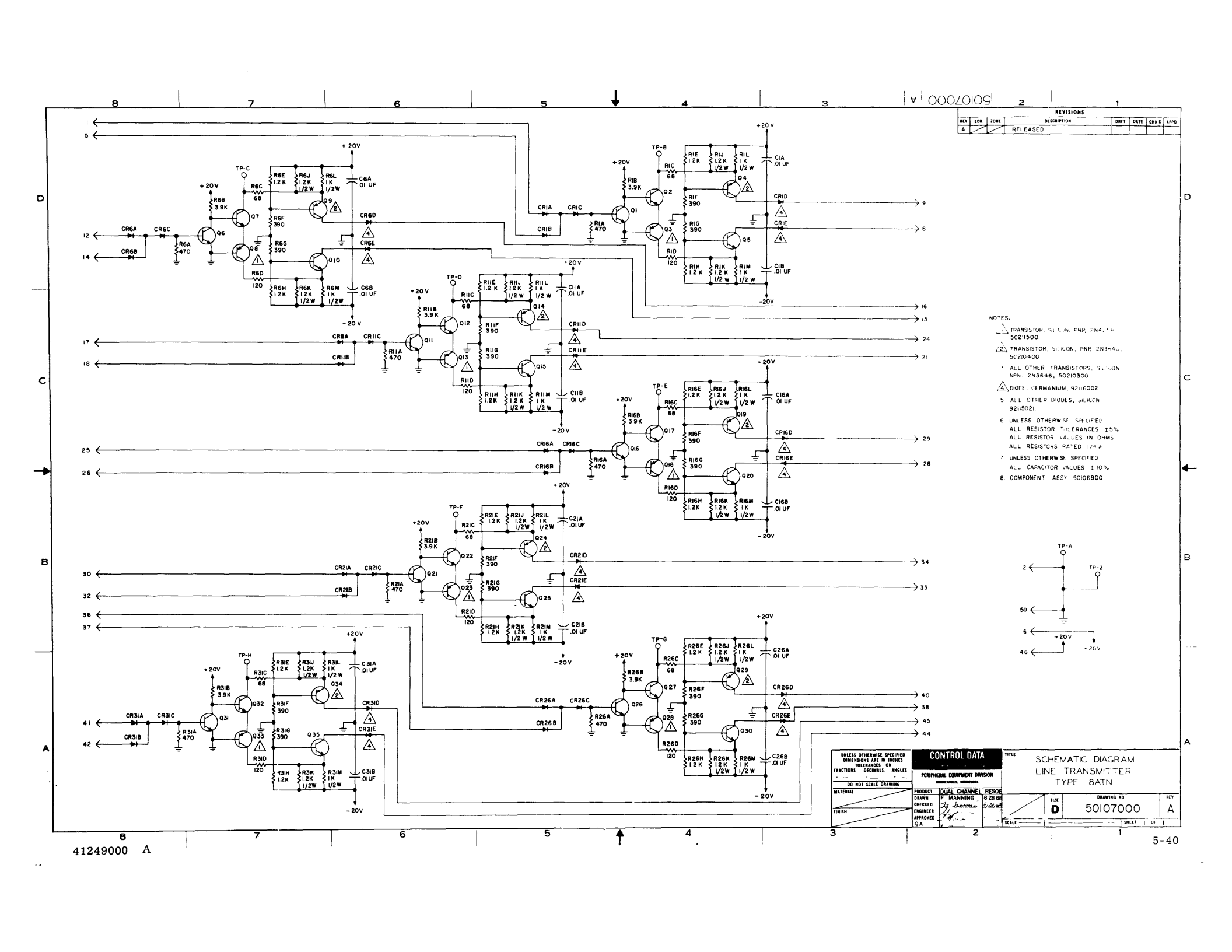
REVISIONS
REV | ECO. | ZONE | DESCRIPTION | DRFT | DATE | CHK'D | APPD
A | RELEASED
NOTES.
1. TRANSISTOR, SILICON, PNP, 2N4, ETC. 50211500.
2. TRANSISTOR, SILICON, PNP, 2N3640, 50210400
3. ALL OTHER TRANSISTORS, SILICON, NPN, 2N3646, 50210300
4. DIODE, GERMANIUM, 92116002
5. ALL OTHER DIODES, SILICON 92115021.
6. UNLESS OTHERWISE SPECIFIED ALL RESISTOR TOLERANCES ±5% ALL RESISTOR VALUES IN OHMS ALL RESISTORS RATED 1/4 W
7. UNLESS OTHERWISE SPECIFIED ALL CAPACITOR VALUES ±10%
8. COMPONENT ASSY 50106900
CONTROL DATA
PERIPHERAL EQUIPMENT DIVISION
TITLE
SCHEMATIC DIAGRAM
LINE TRANSMITTER
TYPE 8ATN
PRODUCT DUAL CHANNEL RESOR
DRAWN F. MANNING 8 28 68
CHECKED
ENGINEER
APPROVED
QA
SIZE D
DRAWING NO 50107000
REV A
SCALE
SHEET OF
UNLESS OTHERWISE SPECIFIED DIMENSIONS ARE IN INCHES TOLERANCES ON FRACTIONS DECIMALS ANGLES
DO NOT SCALE DRAWING
MATERIAL
FINISH
50107000 A
41249000 A
5-40

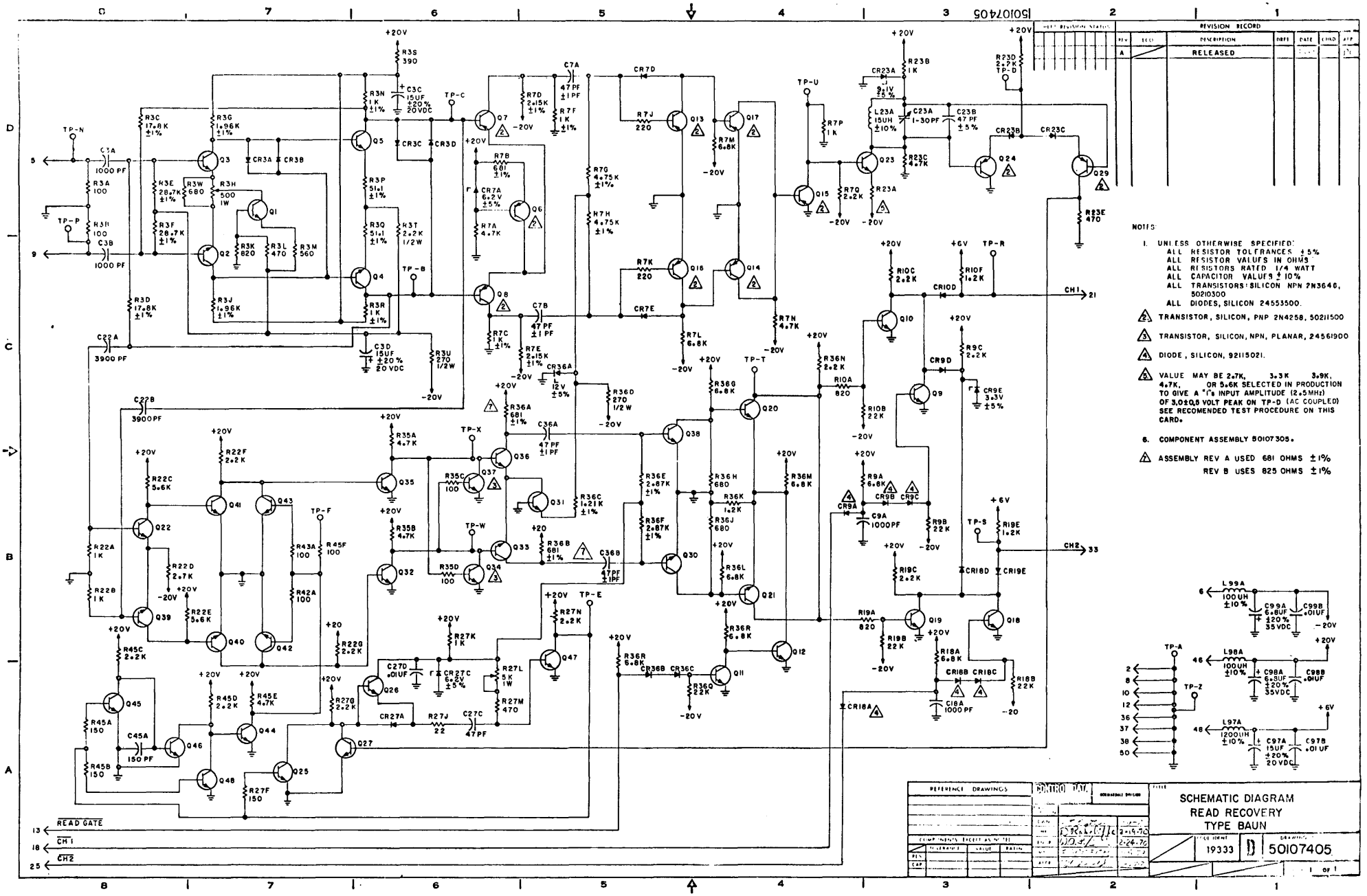
50107405
REVISION RECORD
REV
DESCRIPTION
DATE
RELEASED
NOTES:
1. UNLESS OTHERWISE SPECIFIED:
ALL RESISTOR TOLERANCES ±5%
ALL RESISTOR VALUES IN OHMS
ALL RESISTORS RATED 1/4 WATT
ALL CAPACITOR VALUES ±10%
ALL TRANSISTORS: SILICON NPN 2N3646, 50210300
ALL DIODES, SILICON 24553500.
2. TRANSISTOR, SILICON, PNP 2N4258, 50211500
3. TRANSISTOR, SILICON, NPN, PLANAR, 24561900
4. DIODE, SILICON, 92115021.
5. VALUE MAY BE 2.7K, 3.3K 3.9K, 4.7K, OR 5.6K SELECTED IN PRODUCTION TO GIVE A "1"s INPUT AMPLITUDE (2.5MHz) OF 3.0±0.5 VOLT PEAK ON TP-D (AC COUPLED) SEE RECOMENDED TEST PROCEDURE ON THIS CARD.
6. COMPONENT ASSEMBLY 50107305.
7. ASSEMBLY REV A USED 681 OHMS ±1%
REV B USES 825 OHMS ±1%
REFERENCE DRAWINGS
SCHEMATIC DIAGRAM
READ RECOVERY
TYPE BAUN
19333
50107405
READ GATE
CH1
CH2

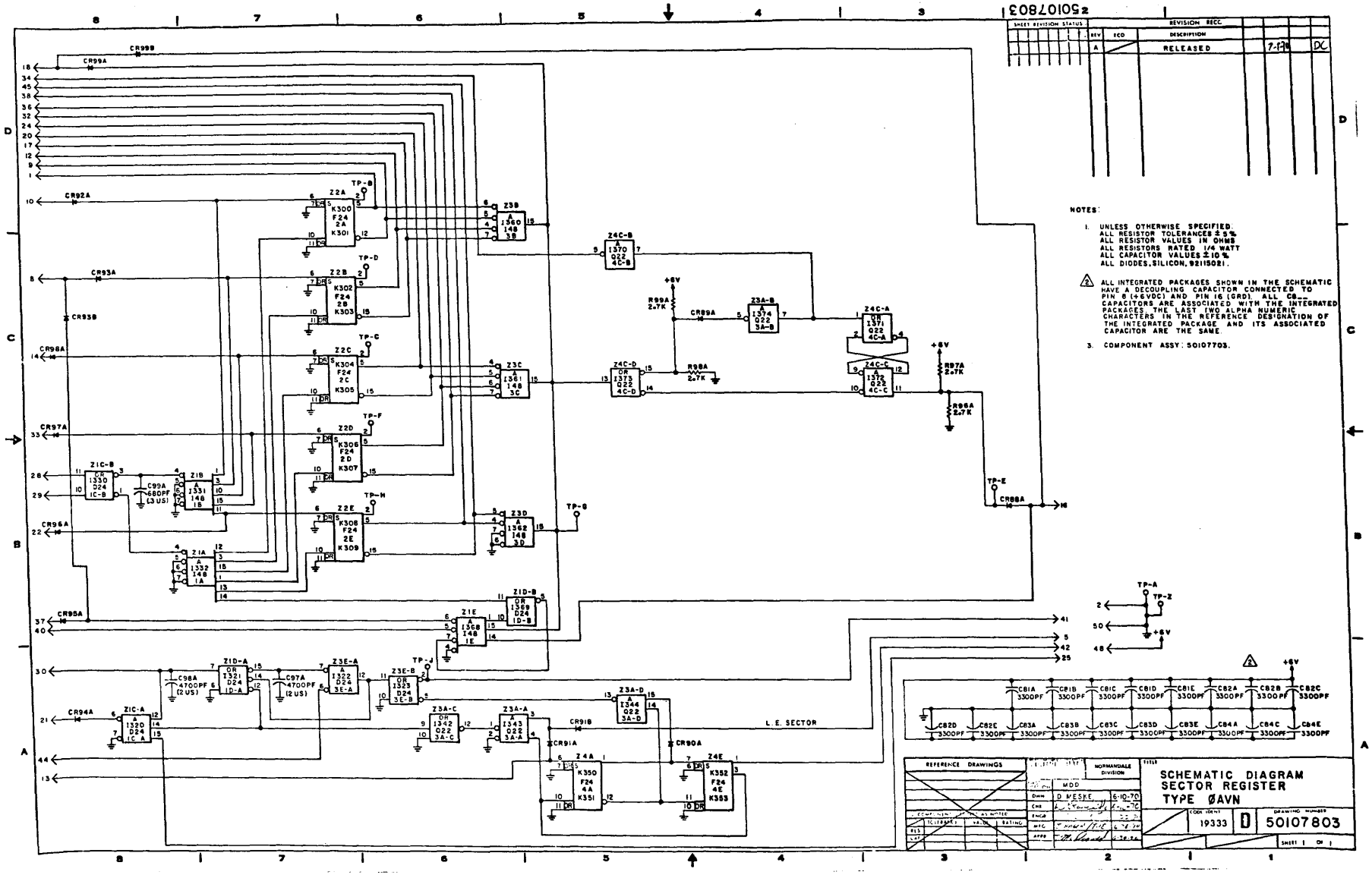

NOTES:
1. UNLESS OTHERWISE SPECIFIED.
ALL RESISTOR TOLERANCES ± 5%
ALL RESISTOR VALUES IN OHMS
ALL RESISTORS RATED 1/4 WATT
ALL CAPACITOR VALUES ± 10%
ALL DIODES, SILICON, 92115021.
2. ALL INTEGRATED PACKAGES SHOWN IN THE SCHEMATIC HAVE A DECOUPLING CAPACITOR CONNECTED TO PIN 8 (+6VDC) AND PIN 16 (GRD). ALL C8-- CAPACITORS ARE ASSOCIATED WITH THE INTEGRATED PACKAGES. THE LAST TWO ALPHA NUMERIC CHARACTERS IN THE REFERENCE DESIGNATION OF THE INTEGRATED PACKAGE AND ITS ASSOCIATED CAPACITOR ARE THE SAME.
3. COMPONENT ASSY: 50107703.
L.E. SECTOR
REFERENCE DRAWINGS
NORMANDALE DIVISION
MDD
D MESKE
6-10-70
SCHEMATIC DIAGRAM
SECTOR REGISTER
TYPE ØAVN
19333
D
50107803
SHEET 1 OF 1

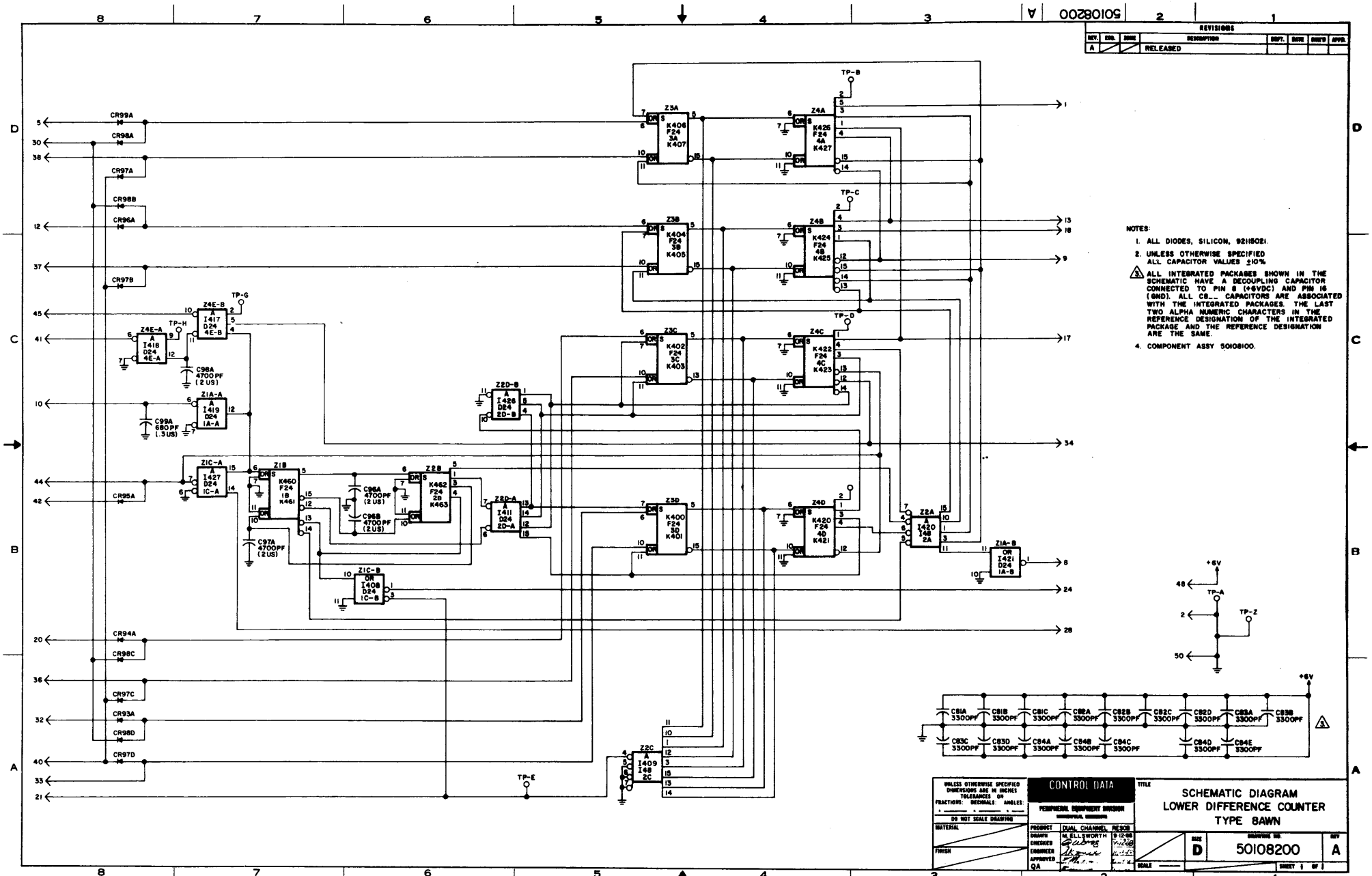
50108200
REVISIONS
REV. | ECO. | ZONE | DESCRIPTION | DRFT. | DATE | CHK'D | APPD.
A | RELEASED
NOTES:
1. ALL DIODES, SILICON, 9211S021.
2. UNLESS OTHERWISE SPECIFIED ALL CAPACITOR VALUES ±10%
3. ALL INTEGRATED PACKAGES SHOWN IN THE SCHEMATIC HAVE A DECOUPLING CAPACITOR CONNECTED TO PIN 8 (+6VDC) AND PIN 16 (GND). ALL C8__ CAPACITORS ARE ASSOCIATED WITH THE INTEGRATED PACKAGES. THE LAST TWO ALPHA NUMERIC CHARACTERS IN THE REFERENCE DESIGNATION OF THE INTEGRATED PACKAGE AND THE REFERENCE DESIGNATION ARE THE SAME.
4. COMPONENT ASSY 50108100.
CR99A
CR98A
CR97A
CR98B
CR96A
CR97B
CR95A
CR94A
CR98C
CR97C
CR93A
CR98D
CR97D
TP-A
TP-B
TP-C
TP-D
TP-E
TP-G
TP-H
+6V
Z1A-A
Z1A-B
Z1B
Z1C-A
Z1C-B
Z2A
Z2B
Z2C
Z2D-A
Z2D-B
Z3A
Z3B
Z3C
Z3D
Z4A
Z4B
Z4C
Z4D
Z4E-A
Z4E-B
C97A 4700PF (2 US)
C98A 4700 PF (2 US)
C98B 4700PF (2US)
C99A 680PF (.3 US)
C81A 3300PF
C81B 3300PF
C81C 3300PF
C82A 3300PF
C82B 3300PF
C82C 3300PF
C82D 3300PF
C83A 3300PF
C83B 3300PF
C83C 3300PF
C83D 3300PF
C84A 3300PF
C84B 3300PF
C84C 3300PF
C84D 3300PF
C84E 3300PF
CONTROL DATA
PERIPHERAL EQUIPMENT DIVISION
SCHEMATIC DIAGRAM
LOWER DIFFERENCE COUNTER
TYPE 8AWN
DUAL CHANNEL RESCB
M. ELLSWORTH
SIZE D
50108200
REV A

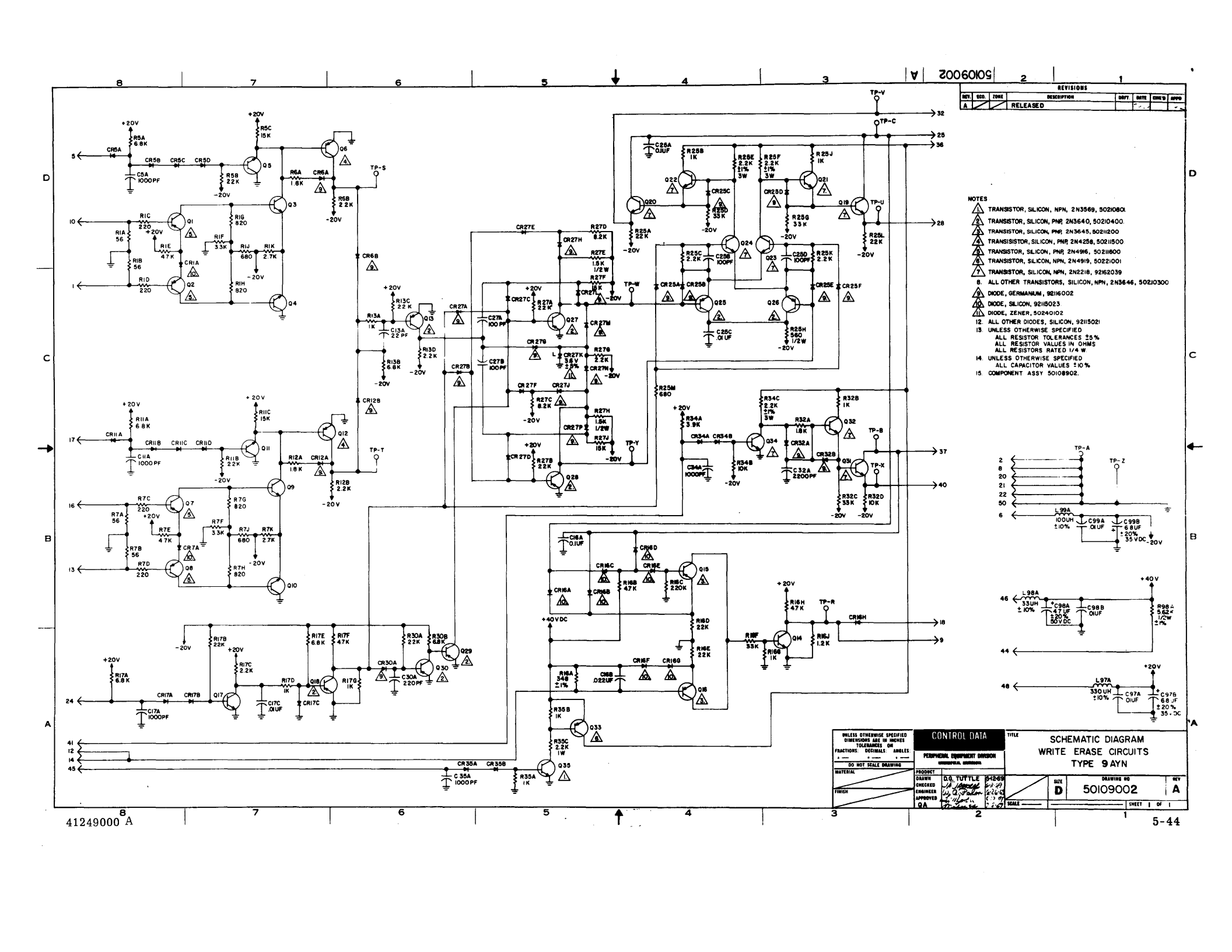
50109002
REVISIONS
REV. | ECO. | ZONE | DESCRIPTION | DRFT | DATE | CHK'D | APPD
A | RELEASED
NOTES
1. TRANSISTOR, SILICON, NPN, 2N3569, 50210801
2. TRANSISTOR, SILICON, PNP, 2N3640, 50210400
3. TRANSISTOR, SILICON, PNP, 2N3645, 50211200
4. TRANSISISTOR, SILICON, PNP, 2N4258, 50211500
5. TRANSISTOR, SILICON, PNP, 2N4916, 50211600
6. TRANSISTOR, SILICON, NPN, 2N4919, 50221001
7. TRANSISTOR, SILICON, NPN, 2N2218, 92162039
8. ALL OTHER TRANSISTORS, SILICON, NPN, 2N3646, 50210300
9. DIODE, GERMANIUM, 92116002
10. DIODE, SILICON, 92115023
11. DIODE, ZENER, 50240102
12. ALL OTHER DIODES, SILICON, 92115021
13. UNLESS OTHERWISE SPECIFIED
ALL RESISTOR TOLERANCES ±5%
ALL RESISTOR VALUES IN OHMS
ALL RESISTORS RATED 1/4 W
14. UNLESS OTHERWISE SPECIFIED
ALL CAPACITOR VALUES ±10%
15. COMPONENT ASSY 50108902.
CONTROL DATA
PERIPHERAL EQUIPMENT DIVISION
TITLE
SCHEMATIC DIAGRAM
WRITE ERASE CIRCUITS
TYPE 9 AYN
DRAWING NO 50109002
REV A
SIZE D
SCALE
SHEET 1 OF 1
DRAWN D.G. TUTTLE 5-12-69
CHECKED
ENGINEER
APPROVED
QA
PRODUCT
MATERIAL
FINISH
DO NOT SCALE DRAWING
41249000 A
5-44

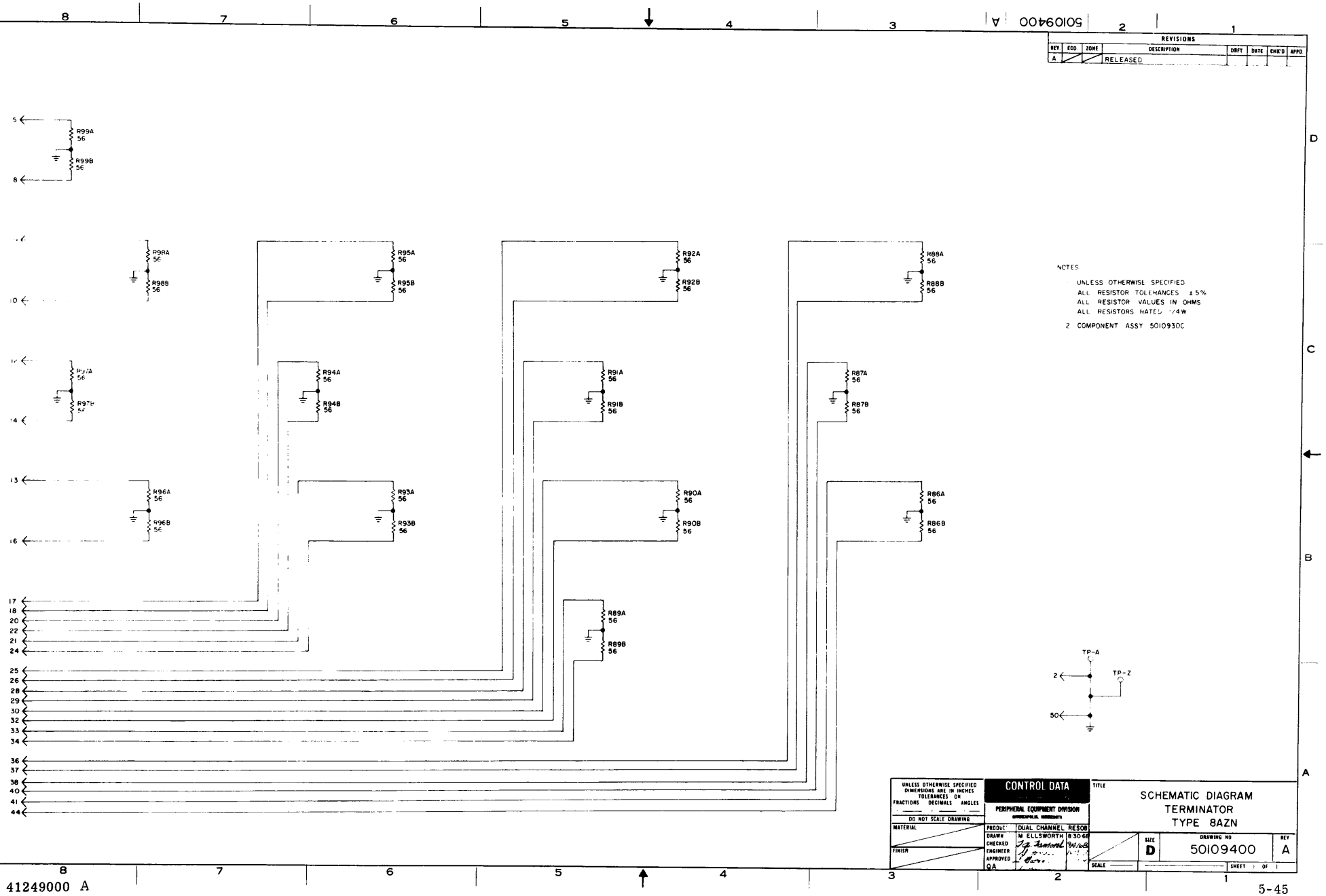

NOTES

1. UNLESS OTHERWISE SPECIFIED
   ALL RESISTOR TOLERANCES ±5%
   ALL RESISTOR VALUES IN OHMS
   ALL RESISTORS RATED 1/4W
2. COMPONENT ASSY 50109300

REVISIONS							
REV.	ECO	ZONE	DESCRIPTION	DRFT	DATE	CHK'D	APPD
A			RELEASED				

50109400 A

UNLESS OTHERWISE SPECIFIED DIMENSIONS ARE IN INCHES
TOLERANCES ON FRACTIONS DECIMALS ANGLES
DO NOT SCALE DRAWING
MATERIAL
FINISH

CONTROL DATA
PERIPHERAL EQUIPMENT DIVISION
PRODUCT DUAL CHANNEL RESOB
DRAWN M ELLSWORTH 8 30 68
CHECKED
ENGINEER
APPROVED
QA

TITLE
SCHEMATIC DIAGRAM
TERMINATOR
TYPE 8AZN

SIZE D | DRAWING NO 50109400 | REV A
SCALE | SHEET 1 OF 1

REVISIONS						
REV.	ECO.	ZONE	DESCRIPTION	DRFT.	DATE	CHK'D	APPD.
A			RELEASED				
B	PE 9552	SEE	CO				

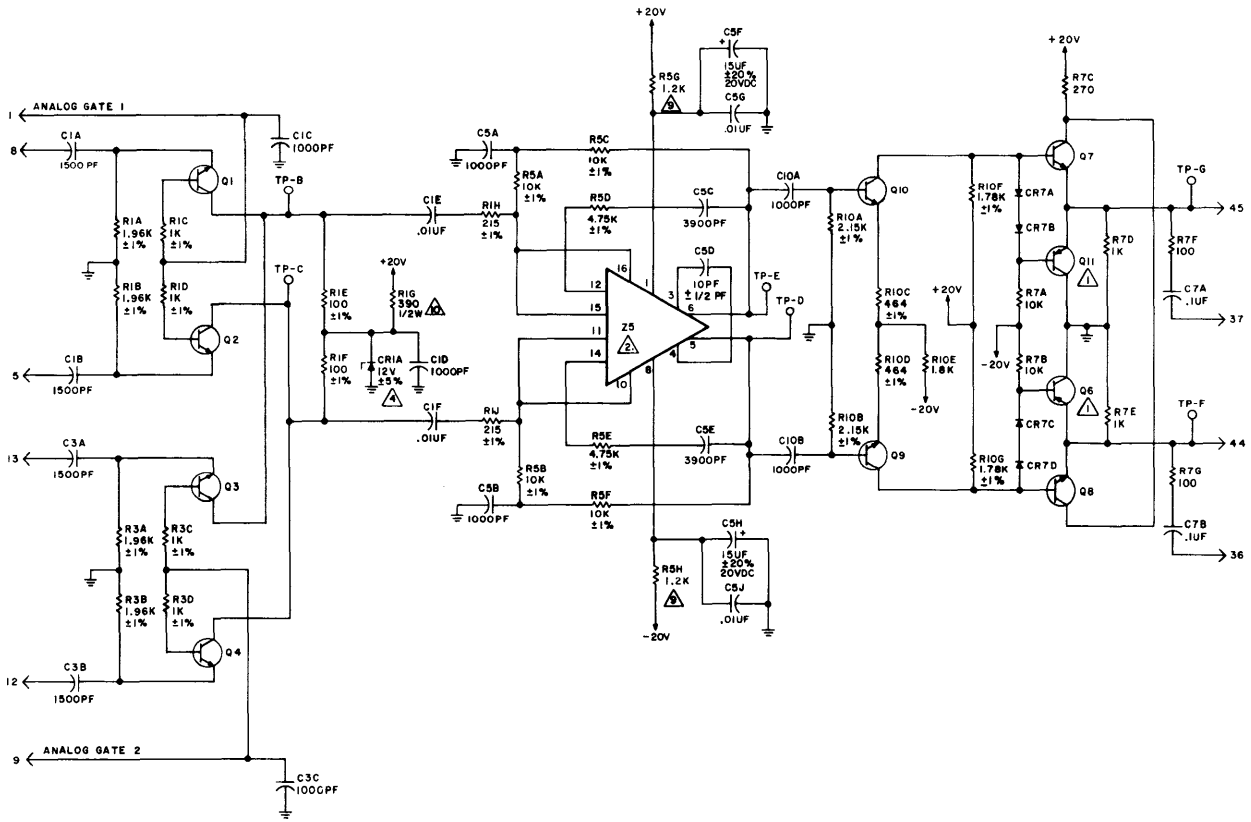

NOTES:

1. TRANSISTOR, SILICON, PNP, 2N4258, 50211500.
2. READ PREAMPLIFIER, TYPE AMP-1, EF 7400, 11844900.
3. ALL OTHER TRANSISTORS, SILICON, NPN, 2N3646, 50210300.
4. DIODE, SILICON ZENER, 50240115.
5. ALL OTHER DIODES, SILICON, 50241100.
6. UNLESS OTHERWISE SPECIFIED
   ALL RESISTOR TOLERANCES ±5%
   ALL RESISTOR VALUES IN OHMS.
   ALL RESISTORS RATED 1/4 W.
7. UNLESS OTHERWISE SPECIFIED
   ALL CAPACITOR VALUES ±10%
8. COMPONENT ASSY 50180100.
5. ASSY REV A USED TWO 2.2K OHM RESISTORS IN PARALLEL.
10. ASSY REV A USED TWO 680 OHM, 1/4W RESISTORS IN PARALLEL.

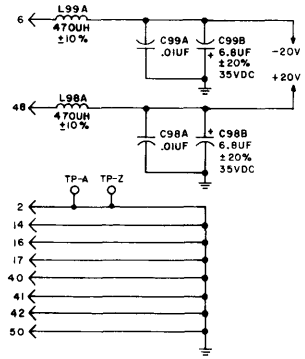

UNLESS OTHERWISE SPECIFIED DIMENSIONS ARE IN INCHES TOLERANCES ON FRACTIONS: DECIMALS: ANGLES:	CONTROL DATA	TITLE
DO NOT SCALE DRAWING	PERIPHERAL EQUIPMENT DIVISION	SCHEMATIC DIAGRAM ANALOG GATE AND AMPLIFIER TYPE 8FAN
MATERIAL	PRODUCT: DUAL CHANNEL RESOR	
FINISH	DRAWN: F. MANNING 7-21-69	SIZE: D — DRAWING NO.: 50180200 — REV: B
	CHECKED:	
	ENGINEER:	
	APPROVED:	SCALE: — SHEET — OF —
	QA:	

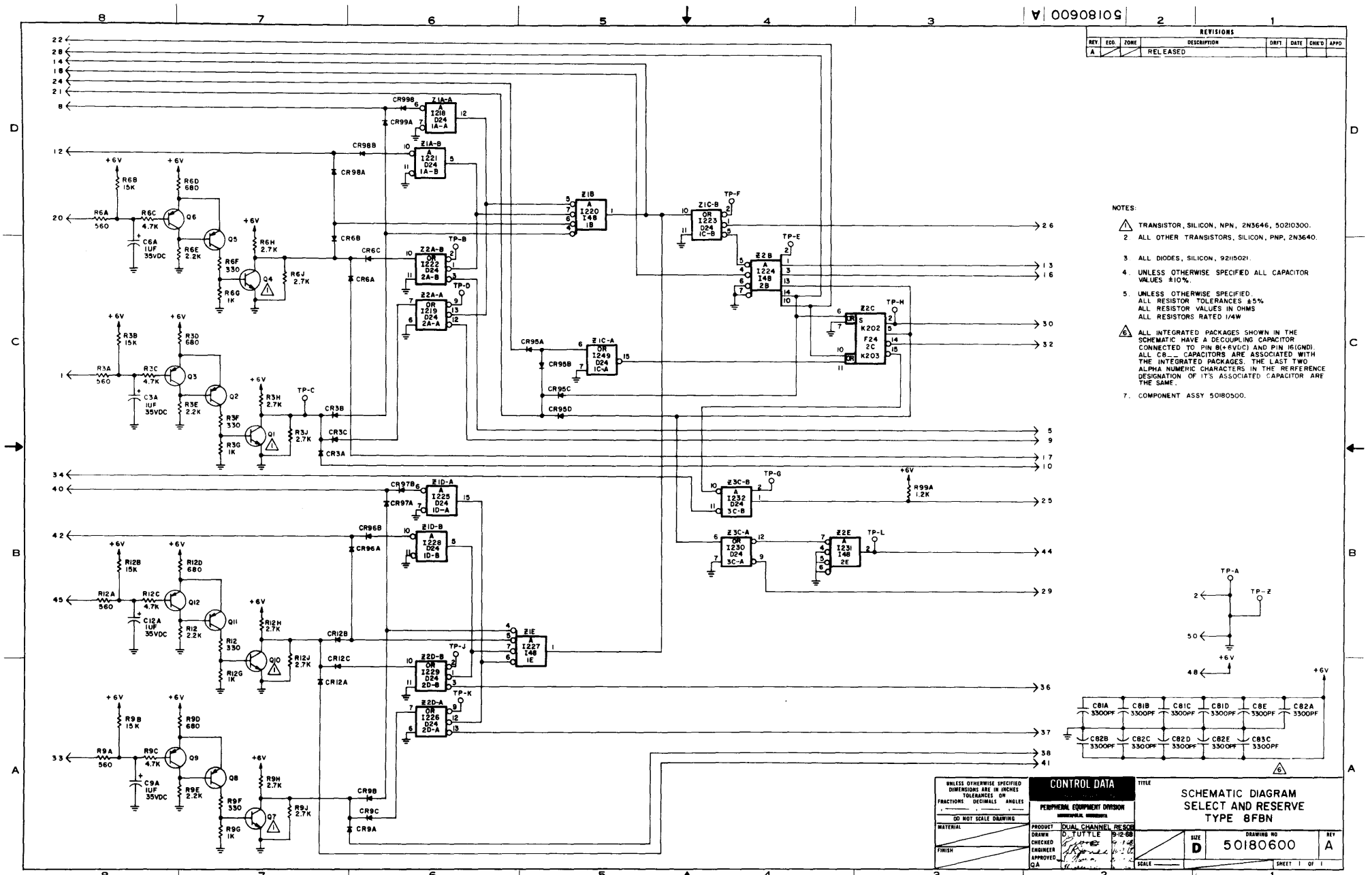

50180600 A
REVISIONS
REV. ECO. ZONE DESCRIPTION DRFT DATE CHK'D APPD
A RELEASED
NOTES:
1. TRANSISTOR, SILICON, NPN, 2N3646, 50210300.
2. ALL OTHER TRANSISTORS, SILICON, PNP, 2N3640.
3. ALL DIODES, SILICON, 92115021.
4. UNLESS OTHERWISE SPECIFIED ALL CAPACITOR VALUES ±10%.
5. UNLESS OTHERWISE SPECIFIED. ALL RESISTOR TOLERANCES ±5% ALL RESISTOR VALUES IN OHMS ALL RESISTORS RATED 1/4W
6. ALL INTEGRATED PACKAGES SHOWN IN THE SCHEMATIC HAVE A DECOUPLING CAPACITOR CONNECTED TO PIN 8(+6VDC) AND PIN 16(GND). ALL C8__ CAPACITORS ARE ASSOCIATED WITH THE INTEGRATED PACKAGES. THE LAST TWO ALPHA NUMERIC CHARACTERS IN THE RERFERENCE DESIGNATION OF IT'S ASSOCIATED CAPACITOR ARE THE SAME.
7. COMPONENT ASSY 50180500.
UNLESS OTHERWISE SPECIFIED DIMENSIONS ARE IN INCHES TOLERANCES ON FRACTIONS DECIMALS ANGLES
DO NOT SCALE DRAWING
MATERIAL
FINISH
CONTROL DATA
PERIPHERAL EQUIPMENT DIVISION
PRODUCT DUAL CHANNEL RESOB
DRAWN D. TUTTLE 9-12-68
CHECKED
ENGINEER
APPROVED
QA
TITLE
SCHEMATIC DIAGRAM
SELECT AND RESERVE
TYPE 8FBN
SIZE D
DRAWING NO 50180600
REV A
SCALE
SHEET 1 OF 1

41249000 A

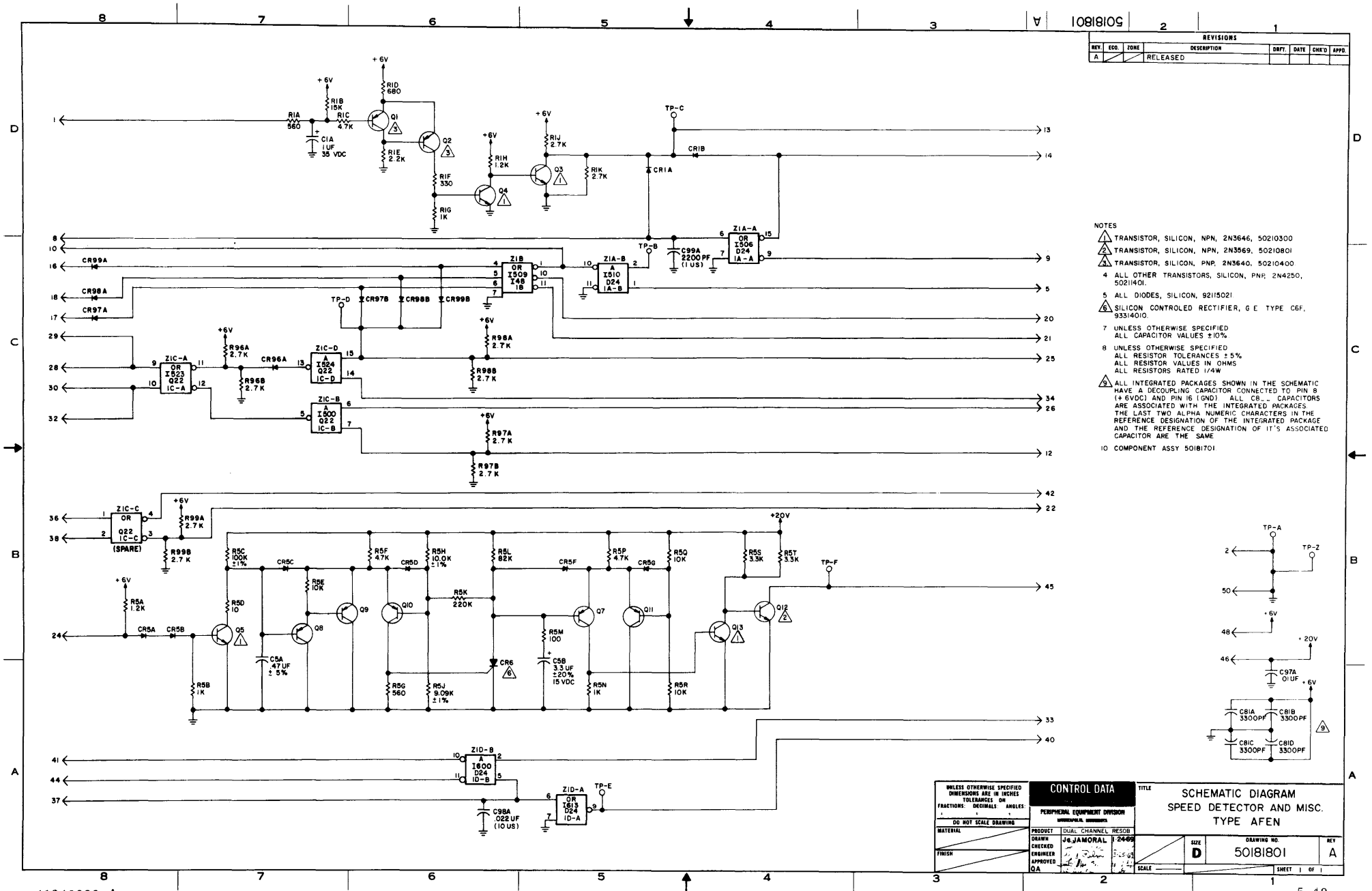

50181801
REVISIONS
REV. ECO. ZONE DESCRIPTION DRFT. DATE CHK'D APPD.
A RELEASED
NOTES
1 TRANSISTOR, SILICON, NPN, 2N3646, 50210300
2 TRANSISTOR, SILICON, NPN, 2N3569, 50210801
3 TRANSISTOR, SILICON, PNP, 2N3640, 50210400
4 ALL OTHER TRANSISTORS, SILICON, PNP, 2N4250, 50211401.
5 ALL DIODES, SILICON, 92115021
6 SILICON CONTROLED RECTIFIER, G E TYPE C6F, 93314010.
7 UNLESS OTHERWISE SPECIFIED ALL CAPACITOR VALUES ±10%
8 UNLESS OTHERWISE SPECIFIED ALL RESISTOR TOLERANCES ±5% ALL RESISTOR VALUES IN OHMS ALL RESISTORS RATED 1/4W
9 ALL INTEGRATED PACKAGES SHOWN IN THE SCHEMATIC HAVE A DECOUPLING CAPACITOR CONNECTED TO PIN 8 (+6VDC) AND PIN 16 (GND). ALL C8__ CAPACITORS ARE ASSOCIATED WITH THE INTEGRATED PACKAGES. THE LAST TWO ALPHA NUMERIC CHARACTERS IN THE REFERENCE DESIGNATION OF THE INTEGRATED PACKAGE AND THE REFERENCE DESIGNATION OF IT'S ASSOCIATED CAPACITOR ARE THE SAME
10 COMPONENT ASSY 50181701
UNLESS OTHERWISE SPECIFIED DIMENSIONS ARE IN INCHES TOLERANCES ON FRACTIONS: DECIMALS: ANGLES:
DO NOT SCALE DRAWING
MATERIAL
FINISH
CONTROL DATA
PERIPHERAL EQUIPMENT DIVISION
PRODUCT DUAL CHANNEL RESOB
DRAWN J.G. JAMORAL 1-24-69
CHECKED
ENGINEER
APPROVED
QA
TITLE SCHEMATIC DIAGRAM SPEED DETECTOR AND MISC. TYPE AFEN
SIZE D
DRAWING NO. 50181801
REV A
SCALE
SHEET 1 OF 1

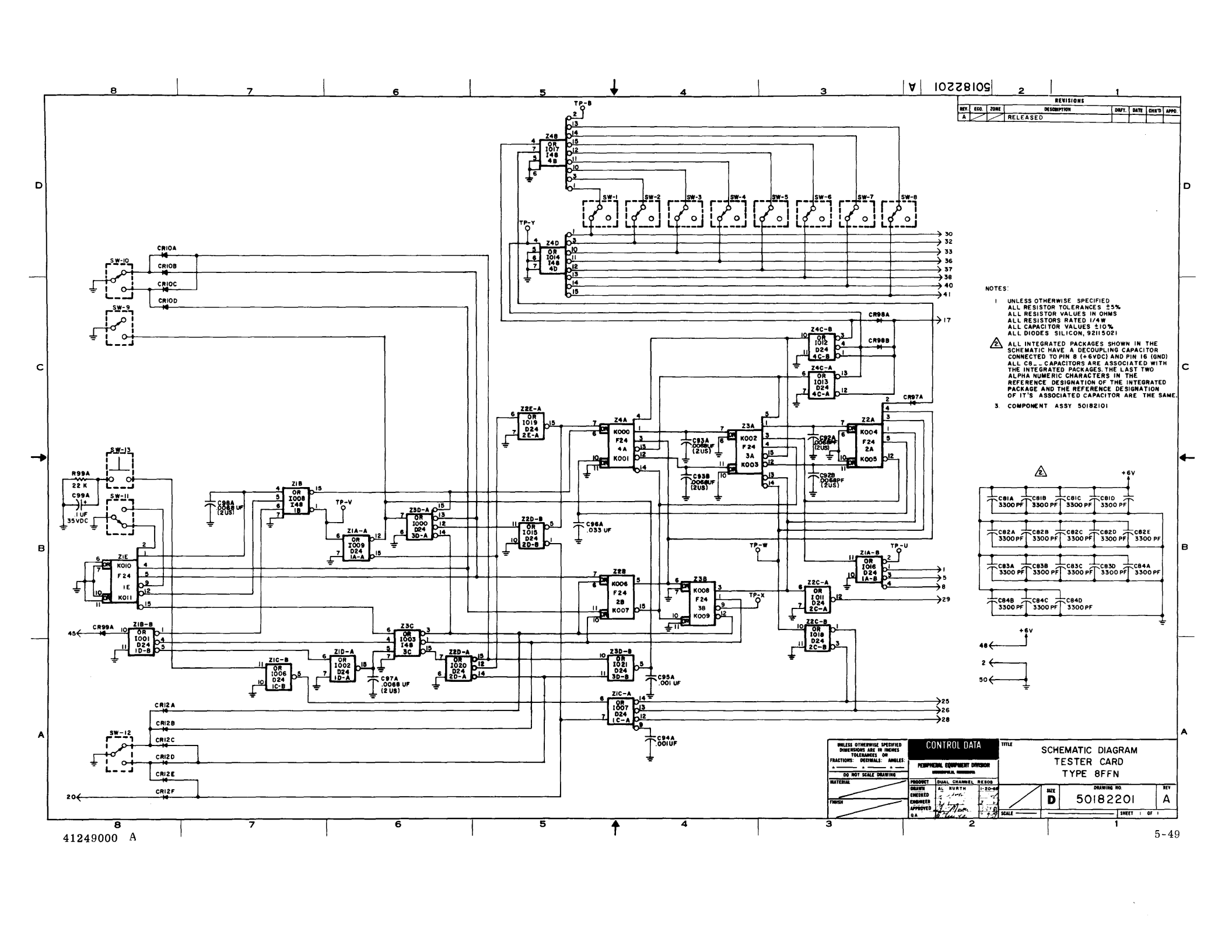
REVISIONS
REV. ECO. ZONE DESCRIPTION DRFT. DATE CHK'D APPD.
A RELEASED
5018220I A
NOTES:
1. UNLESS OTHERWISE SPECIFIED
ALL RESISTOR TOLERANCES ±5%
ALL RESISTOR VALUES IN OHMS
ALL RESISTORS RATED 1/4W
ALL CAPACITOR VALUES ±10%
ALL DIODES SILICON, 9211502
2. ALL INTEGRATED PACKAGES SHOWN IN THE SCHEMATIC HAVE A DECOUPLING CAPACITOR CONNECTED TO PIN 8 (+6VDC) AND PIN 16 (GND) ALL C8__ CAPACITORS ARE ASSOCIATED WITH THE INTEGRATED PACKAGES. THE LAST TWO ALPHA NUMERIC CHARACTERS IN THE REFERENCE DESIGNATION OF THE INTEGRATED PACKAGE AND THE REFERENCE DESIGNATION OF IT'S ASSOCIATED CAPACITOR ARE THE SAME.
3. COMPONENT ASSY 50182101
CONTROL DATA
PERIPHERAL EQUIPMENT DIVISION
TITLE
SCHEMATIC DIAGRAM
TESTER CARD
TYPE 8FFN
DRAWING NO. 50182201
SIZE D
REV A
SHEET 1 OF 1
41249000 A
5-49

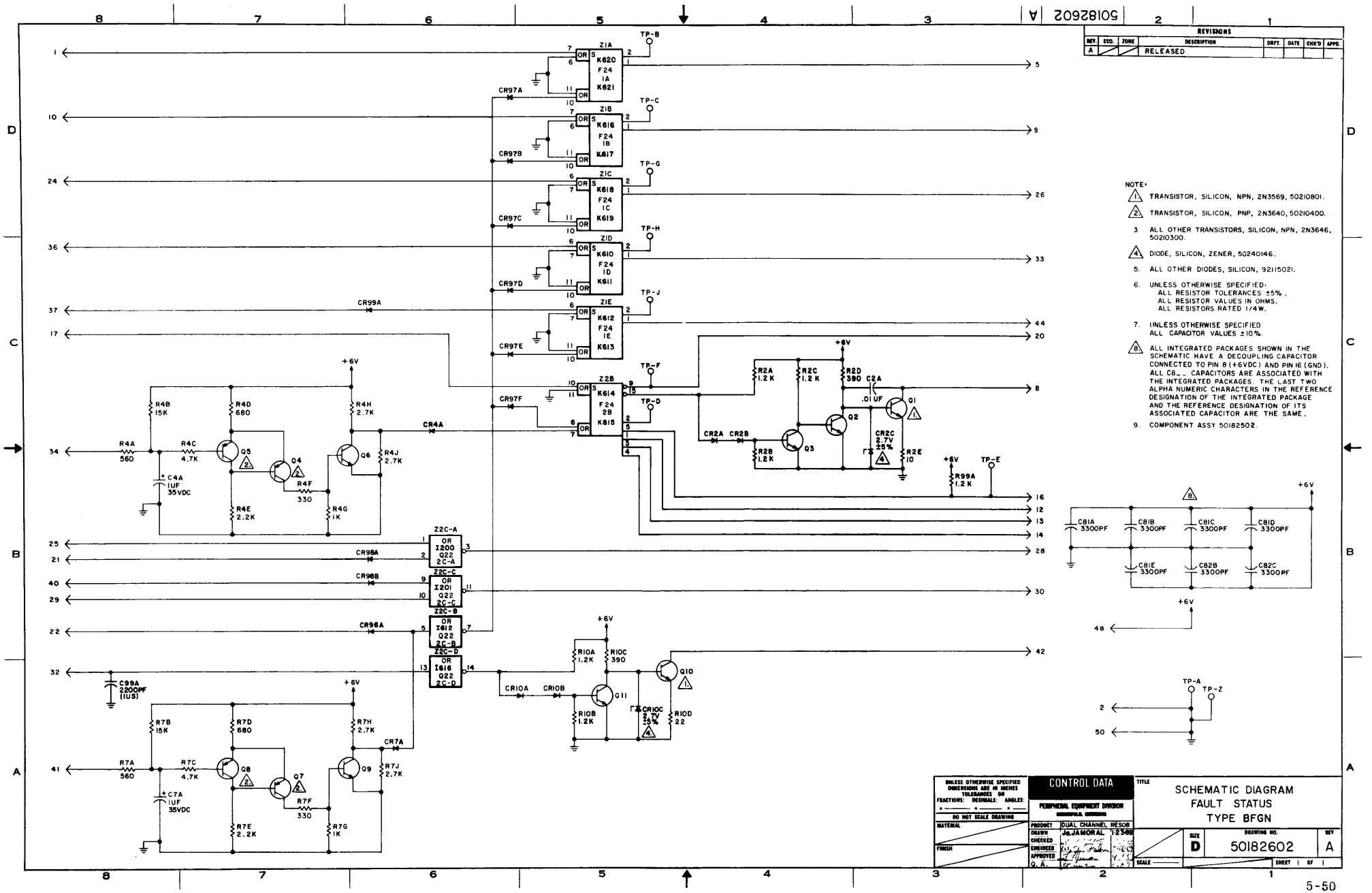

50182602 A
REVISIONS
REV. ECO. ZONE DESCRIPTION DRFT. DATE CHK'D APPD.
A RELEASED
NOTE:
1. TRANSISTOR, SILICON, NPN, 2N3569, 50210801.
2. TRANSISTOR, SILICON, PNP, 2N3640, 50210400.
3. ALL OTHER TRANSISTORS, SILICON, NPN, 2N3646, 50210300.
4. DIODE, SILICON, ZENER, 50240146.
5. ALL OTHER DIODES, SILICON, 92115021.
6. UNLESS OTHERWISE SPECIFIED: ALL RESISTOR TOLERANCES ±5%. ALL RESISTOR VALUES IN OHMS. ALL RESISTORS RATED 1/4W.
7. UNLESS OTHERWISE SPECIFIED ALL CAPACITOR VALUES ±10%.
8. ALL INTEGRATED PACKAGES SHOWN IN THE SCHEMATIC HAVE A DECOUPLING CAPACITOR CONNECTED TO PIN 8 (+6VDC) AND PIN 16 (GND). ALL C8__ CAPACITORS ARE ASSOCIATED WITH THE INTEGRATED PACKAGES. THE LAST TWO ALPHA NUMERIC CHARACTERS IN THE REFERENCE DESIGNATION OF THE INTEGRATED PACKAGE AND THE REFERENCE DESIGNATION OF ITS ASSOCIATED CAPACITOR ARE THE SAME.
9. COMPONENT ASSY 50182502.
Z1A K620 F24 1A K621
Z1B K616 F24 1B K617
Z1C K618 F24 1C K619
Z1D K610 F24 1D K611
Z1E K612 F24 1E K613
Z2B K614 F24 2B K615
Z2C-A OR I200 Q22 2C-A
Z2C-C OR I201 Q22 2C-C
Z2C-B OR I612 Q22 2C-B
Z2C-D OR I616 Q22 2C-D
TP-B TP-C TP-G TP-H TP-J TP-F TP-D TP-E TP-A TP-Z
CR97A CR97B CR97C CR97D CR97E CR97F CR99A CR4A CR98A CR98B CR96A CR7A CR10A CR10B CR10C CR2A CR2B
R4A 560 R4B 15K R4C 4.7K R4D 680 R4E 2.2K R4F 330 R4G 1K R4H 2.7K R4J 2.7K
C4A 1UF 35VDC
R7A 560 R7B 15K R7C 4.7K R7D 680 R7E 2.2K R7F 330 R7G 1K R7H 2.7K R7J 2.7K
C7A 1UF 35VDC
C99A 2200PF (1US)
R2A 1.2K R2B 1.2K R2C 1.2K R2D 390 R2E 10
C2A .01 UF
CR2C 2.7V ±5%
R99A 1.2K
R10A 1.2K R10B 1.2K R10C 390 R10D 22
CR10C 2.7V ±5%
C81A 3300PF C81B 3300PF C81C 3300PF C81D 3300PF C81E 3300PF C82B 3300PF C82C 3300PF
+6V
UNLESS OTHERWISE SPECIFIED DIMENSIONS ARE IN INCHES TOLERANCES ON FRACTIONS: DECIMALS: ANGLES:
DO NOT SCALE DRAWING
MATERIAL
FINISH
CONTROL DATA
PERIPHERAL EQUIPMENT DIVISION
PRODUCT DUAL CHANNEL RESOB
DRAWN Jg.JAMORAL 12369
CHECKED
ENGINEER
APPROVED
Q. A.
TITLE SCHEMATIC DIAGRAM FAULT STATUS TYPE BFGN
SIZE D DRAWING NO. 50182602 REV A
SCALE SHEET 1 OF 1

41249000 A

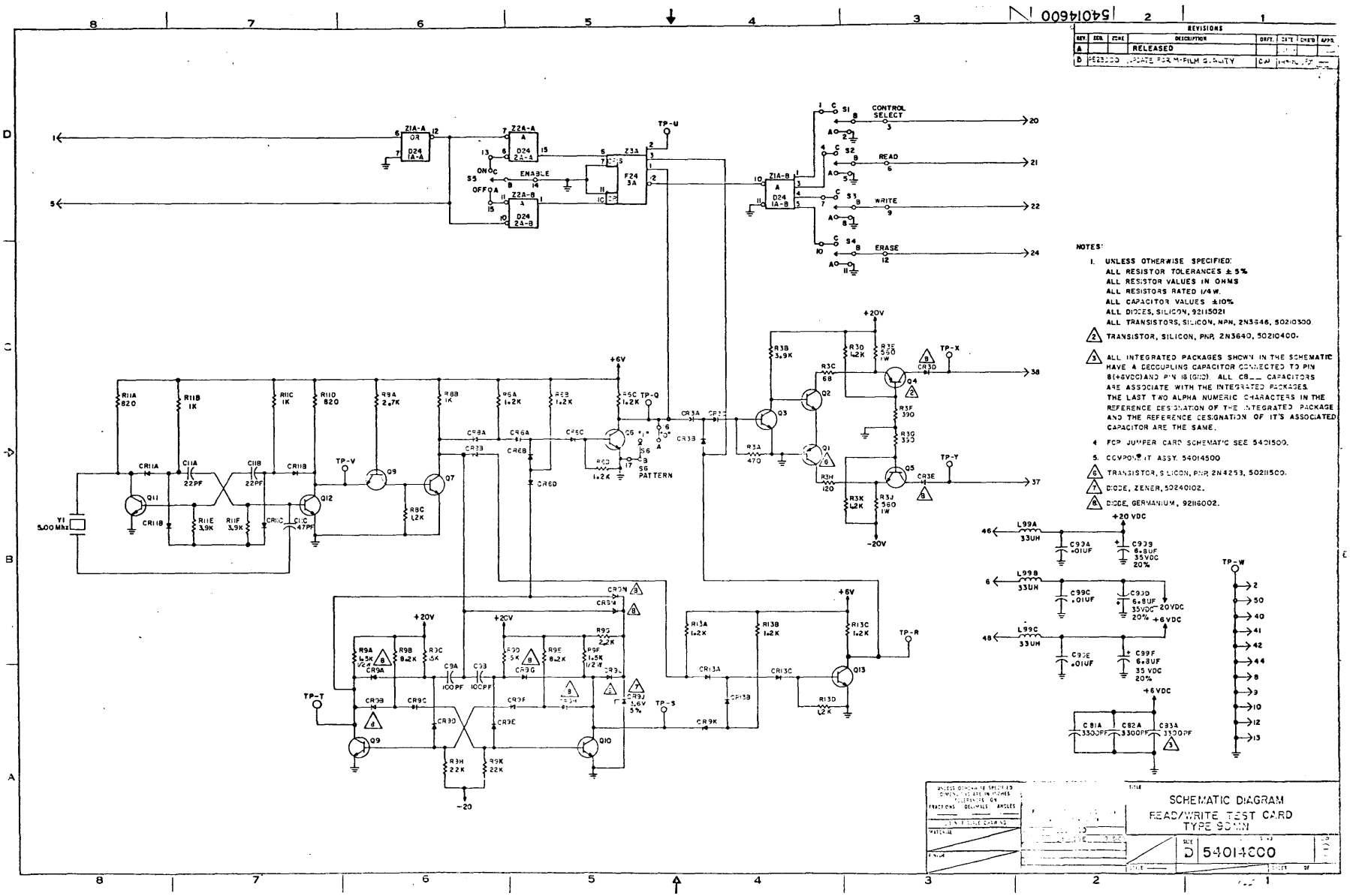
54014600
REVISIONS
REV. ECN. ZONE DESCRIPTION DRFT. DATE CHK'D APPR.
A RELEASED
B PE23000 UPDATE FOR M-FILM QUALITY
CONTROL SELECT
READ
WRITE
ERASE
ENABLE
S6 PATTERN
NOTES:
1. UNLESS OTHERWISE SPECIFIED:
ALL RESISTOR TOLERANCES ± 5%
ALL RESISTOR VALUES IN OHMS
ALL RESISTORS RATED 1/4 W.
ALL CAPACITOR VALUES ±10%
ALL DIODES, SILICON, 92115021
ALL TRANSISTORS, SILICON, NPN, 2N3646, 50210300.
2 TRANSISTOR, SILICON, PNP, 2N3640, 50210400.
3 ALL INTEGRATED PACKAGES SHOWN IN THE SCHEMATIC HAVE A DECOUPLING CAPACITOR CONNECTED TO PIN 8(+6VDC) AND PIN 16 (GND). ALL CB__ CAPACITORS ARE ASSOCIATE WITH THE INTEGRATED PACKAGES. THE LAST TWO ALPHA NUMERIC CHARACTERS IN THE REFERENCE DESIGNATION OF THE INTEGRATED PACKAGE AND THE REFERENCE DESIGNATION OF IT'S ASSOCIATED CAPACITOR ARE THE SAME.
4 FOR JUMPER CARD SCHEMATIC SEE 5401500.
5. COMPONENT ASSY. 54014500
6 TRANSISTOR, SILICON, PNP, 2N4253, 50211500.
7 DIODE, ZENER, 50240102.
8 DIODE, GERMANIUM, 92116002.
SCHEMATIC DIAGRAM
READ/WRITE TEST CARD
TYPE 90MN
D 54014600

SECTION 6

MAINTENANCE

Information for this section is included in BM101 and BM103 Multiple Disk Drive
Pub. No. 41248900

SECTION 7

MAINTENANCE AIDS

MAINTENANCE AIDS

GENERAL

Section 7 contains information on logic circuits, the criteria used in determining the further usability of read/write heads and disk packs, and the tester card used in the Maintenance section.

SPL LOGIC

The logic used in this device is generally termed SPL (Silicon Peripheral Logic). It consists of two styles of circuits: discrete component and Intebrid. Discrete component circuits contain individually identifiable resistors, capacitors, transistors, etc. An Intebrid circuit is a chip containing an integrated circuit(s).

PHYSICAL DESCRIPTION

All components of the SPL cards are mounted on one side of a printed circuit board (Figure 7-1) which is 6 inches wide and 4-3/4 inches high.

The cards are pluggable and are restricted in vertical and horizontal movement by card guide spacers when inserted into the panel connectors. A card puller (PN 84146900) which grips the upper and lower edges of the card is used for removing the cards. No special tools are required to insert a card.

Numerical designators (1 through 99) are etched on the non-component side of the board to identify each transistor. A 4-character alphanumeric designator is etched on the non-component side of the board to identify the card type. A matrix code (alphanumeric) also appears on this side. Non-amplifying components such as Intebrid chips, resistors, capacitors, diodes, etc., are not marked.

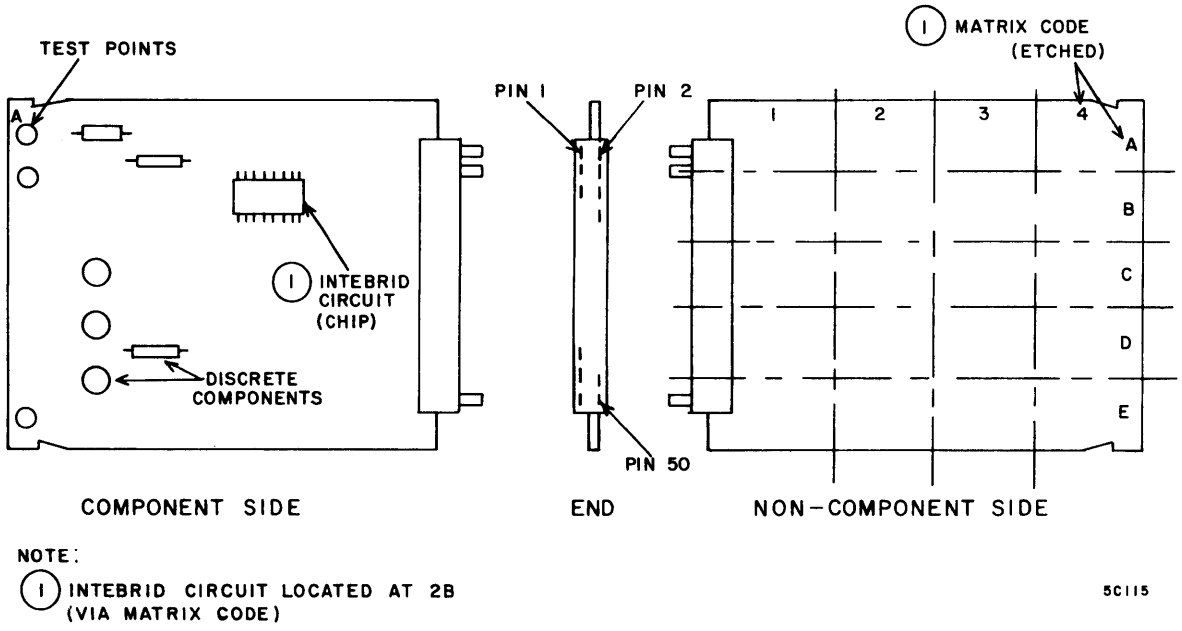

Figure 7-1. SPL Card

Pin Assignments

The module connector consists of a 37-pin male blade connector mounted along the 4-3/4 inch board dimension on the component side of the board.

Connector pins are numbered from the top starting with pin 1 and continuing through pin 50 on the bottom. Thirteen pin positions are omitted. These are 3, 7, 11, 15, 19, 23, 27, 31, 35, 39, 43, 47, and 49.

Six pins of the 37-pin connector are reserved as follows:

Pin 2	Ground
Pin 4	-6v
Pin 6	-20v
Pin 46	+20v
Pin 48	+6v
Pin 50	Ground

Test Points

Test points are located near the edge of the module opposite the connector and in other strategic places on the component side of the board. Test points are assigned alphabetically starting with A on the top, outer edge. In most cases, test points A and Z are available for ground reference.

USE OF RELATIVE LEVEL INDICATORS

The relative level indicator is a small circle located at the origin or termination of a signal line, and tangent to a logic symbol. The presence or absence of this indicator tells the conditions that are necessary to satisfy the function of the logic symbol. The presence of the circle indicates a 0 logic level on that line is needed to satisfy the function. The absence of the circle represents a logical 1 needed to satisfy the function.

AND FUNCTION

The relative level indicator used with an AND logic function may be interpreted in this way: Only under the stated input conditions will the stated output condition occur. Under all other input conditions, the stated output will not occur. For example, Figure 7-2 indicates that only when A and B are 0 logic level (indicated by the circle on their respective inputs) will the output of C be a logical 0 (indicated by the circle on the output line). Under all other input conditions, output C will be a logical 1.

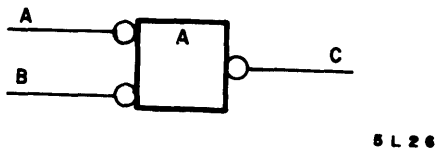

Figure 7-2. AND Function

OR FUNCTION

The relative level indicator used with an OR logic function may be considered as follows: If one or the other, or both of the stated inputs are present, then the stated output will occur. Only when both of the stated inputs are not present will the stated output be changed. For example, Figure 7-3 indicates that if either A is a logical 0 (represented by the circle on its input) or B is a logical 1 (represented by no circle on its input), or both A is a logical 0 and B is a logical 1, then output C will be a logical 0. Only when A is not a logical 0 and B is not a logical 1, will C not be a logical 0.

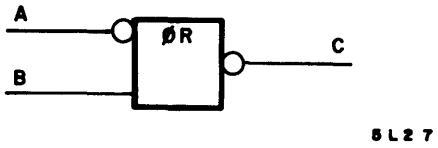

Figure 7-3. OR Function

A complete truth table for use with relative level indicators is given in Figure 7-4.

INFORMATION CONTAINED WITHIN LOGIC SYMBOLS

Discrete Component Circuits

Figure 7-5 shows a schematic (as shown on card schematic diagram) and the logical representation (as shown on logic diagrams) for the same discrete component circuit. Four lines of information are contained within the logic symbol. The top line is the function identifier and designates the broad logic function of that particular symbol. In this case, PA represents a high level amplifier, the logic function performed by the circuit. The third line, also an alphabetic code, designates the circuit type being used (HAB). The circuit type is a subdivision of the function identifier (a specific high level amplifier). By using the circuit type designator, detailed information on that particular circuit can be derived in the following paragraphs (see Discrete Component Circuit Descriptions).

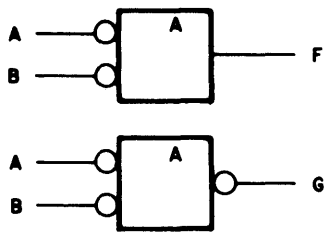

A	B	F	G
0	0	1	0
0	1	0	1
1	0	0	1
1	1	0	1

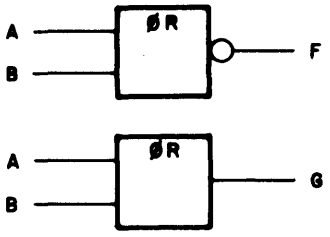

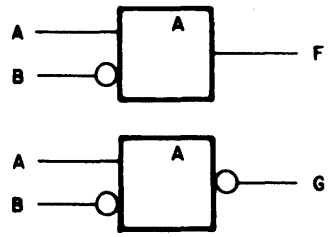

A	B	F	G
0	0	0	1
0	1	0	1
1	0	1	0
1	1	0	1

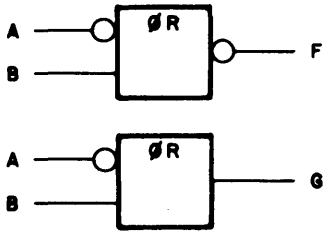

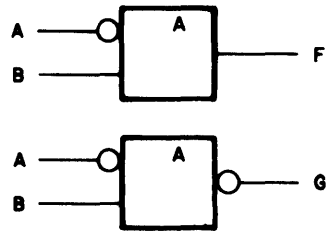

A	B	F	G
0	0	0	1
0	1	1	0
1	0	0	1
1	1	0	1

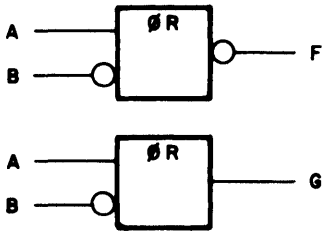

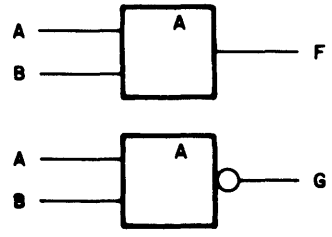

A	B	F	G
0	0	0	1
0	1	0	1
1	0	0	1
1	1	1	0

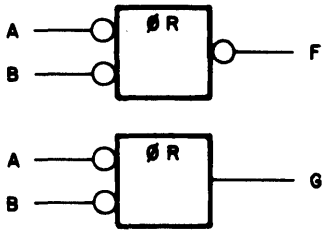

Figure 7-4. Truth Table

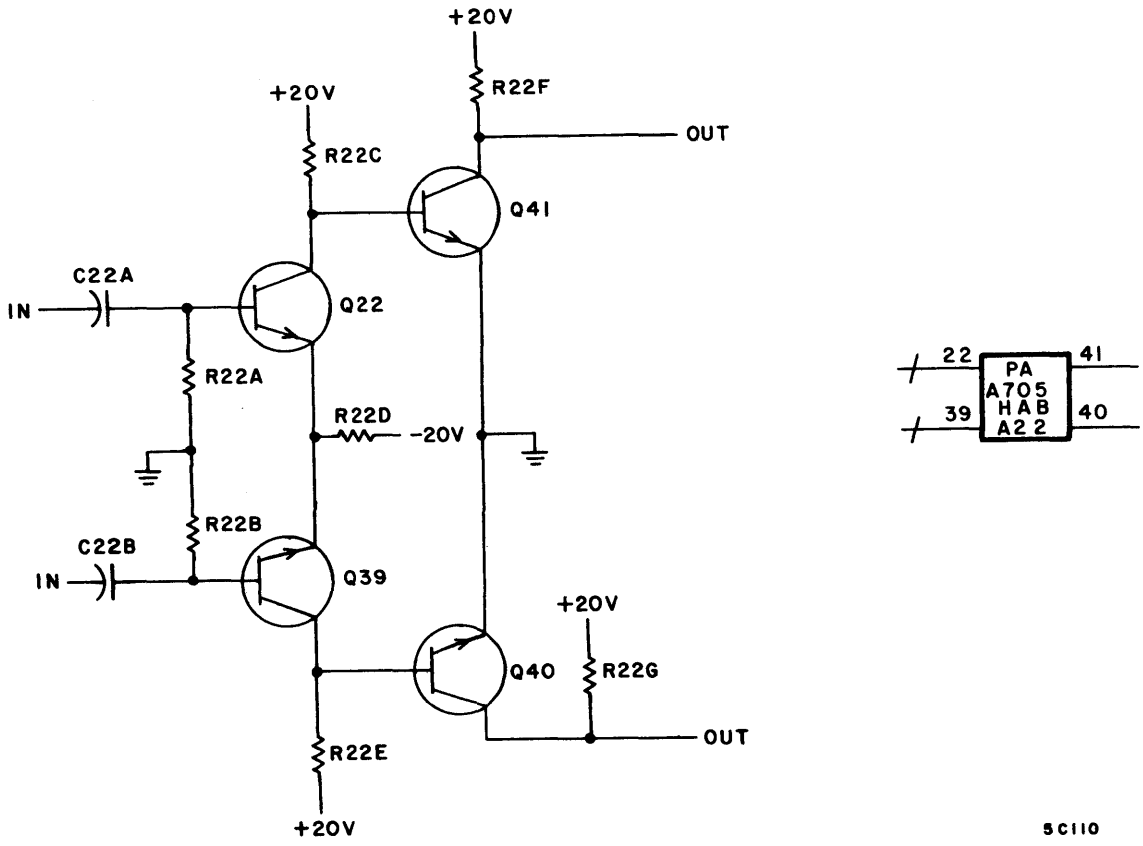

Figure 7-5. Discrete Component Circuit

The second line within the symbol is used to differentiate that particular symbol from similar symbols that appear in the logic diagram. It is called the logic term and consists of a one-letter prefix and an assigned identification number (in this case, A705).

The numbers on the input lines to the symbol indicate which transistor is driven by that input line. For example, the upper input has a number 22 on its line, showing that it drives transistor number 22 (ie., Q22 on the card schematic diagram).

The output lines also have numbers associated with them. These numbers indicate which transistor directly feeds the output line. For example, the lower output line has a number 40 above it, indicating that the output from transistor number 40 (Q40 on the

card schematic diagram) drives the lower output line. For other circuits additional transistor numbers may appear below the logic symbol. These numbers refer to internal transistors that are not directly connected to any input or output line, but are a part of the circuit.

Intebrid Circuits

Figure 7-6 shows the schematic version (as shown on card schematic diagram) and the logical representation (as shown on logic diagrams) for the same Intebrid circuit. The first and second lines of information inside both blocks are the same, and have the same meaning as for the discrete component circuit.

Line three identifies the Intebrid circuit type (D24), and on the logic symbol additionally identifies the section (B) of the circuit chip. (Refer to the Key to Logic Symbols sheet of the logic diagrams for detailed coverage of Intebrid circuit types being used and the number of sections in each chip.)

The fourth information line in the block is for location information. On the schematic version, 1C identifies the matrix block (Figure 7-1) in which the chip is located and B identifies the section of the chip. The fourth line of the logic identifies the card matrix location and it also identifies the logic chassis row (A) and the mating connector in the row (13).

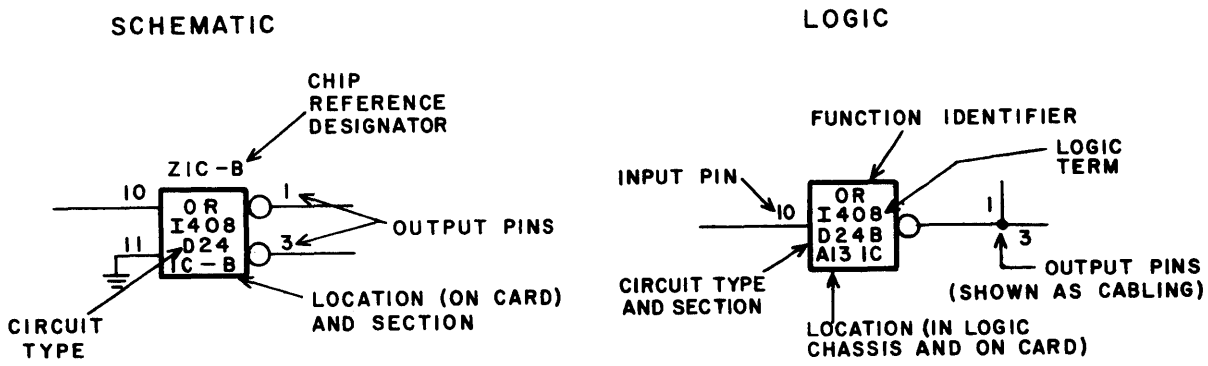

5C112

Figure 7-6. Intebrid Circuit

Pin information for the schematic and logic versions are similar with two exceptions. The logic version does not show unused chip pins, whereas the schematic version shows all unused pins connected to ground. Secondly, the schematic version shows a separate origin for each chip output pin, while the logic version may show a single origin and identify each pin as the line branches to its destination. This scheme is termed cabling and conserves space and preserves appearance.

WIRED FUNCTIONS

The logical representation for wired functions is shown in Figure 7-7. These functions are used where circuits have the capability of being combined as an AND function by having the outputs connected. This is simply a physical connection and no electrical or electronic components are involved. However, the logical interpretation of the wired function is consistent with the AND truth table in Figure 7-4. Arrowheads are used to depict logic flow into the gate. The gate output has no arrowhead.

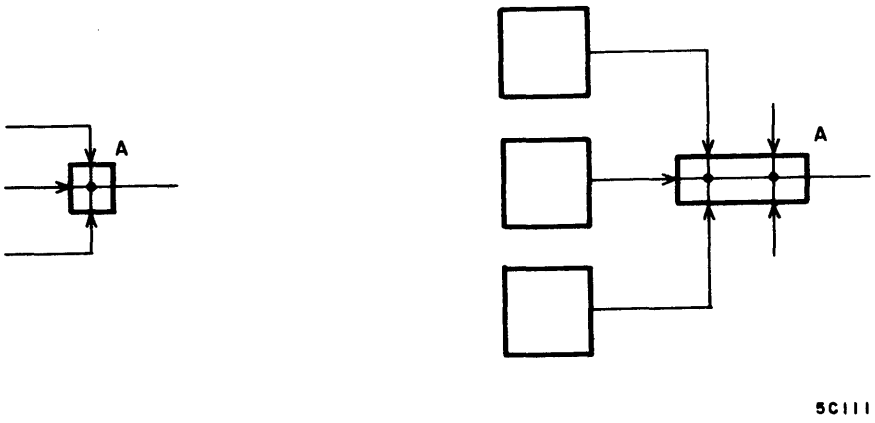

Figure 7-7. Wired Functions

STANDARD/NON-STANDARD LOGIC LEVEL INDICATOR

The input to a logic function at a voltage other than the standard logic level is represented by a slash across the non-standard level line. Absence of the slash (or absence of an A, see below) indicates a standard logic level on that line. Figure 7-5 illustrates the use of this symbol.

When the input signal to a logic function is an analog signal, the input line will have an A across it.

INTEBRID CIRCUIT DESCRIPTIONS

Detailed functional descriptions and schematic diagrams for Intebrid circuits are provided in CDC Pub. No. 60201000.

DISCRETE COMPONENT CIRCUIT DESCRIPTIONS

Figures 7-8 through 7-51 are the schematic diagrams for the discrete component circuits used in this device. A verbal description supports each circuit diagram.

The order of presentation is in accordance with the 3-letter alphabetical circuit type designator.

Low Level Amplifier - FAB

The FAB circuit (Figure 7-8) is a low level amplifier that amplifies the analog read signal from the head. Input B is a gate input.

When input B is +20v, diodes CRNA, CRNB, CRNC, CRND, CRNE and CRNF are forward biased. The voltage between CRNC and CRNE and between CRND and CRNF is clamped at approximately +2.0v. With all diodes forward biased, the read signal can pass to the amplifier.

When input B is ground, diodes CRNG and CRNH clamp the voltage at +0.6v. This reverse biases the input diodes. No read signal can enter.

The preamplifier is a three stage amplifier using an emitter follower output stage for low output impedance. The integrated preamplifier has discrete component ac and dc feedback.

AC feedback is provided by CNE and RNH in the top half and CNF and RNJ in the lower half of the circuit. The signal is brought back to the emitters of the input stage to increase input impedance.

DC feedback is provided by RNG, RNE and CNC (to ground) in the upper half and RNK, RNF and CND (to ground) in the lower half of the circuit. This feedback helps to stabilize the output.

Capacitors CNG, CNH and CNJ, and CNK filter noise from the +20v and -20v power supplies, respectively. The electrolytic capacitors filter low frequency noise. The paper capacitors filter high frequency noise.

Open loop gain in the amplifier is approximately 180. Closed loop gain in the amplifier is approximately 30.

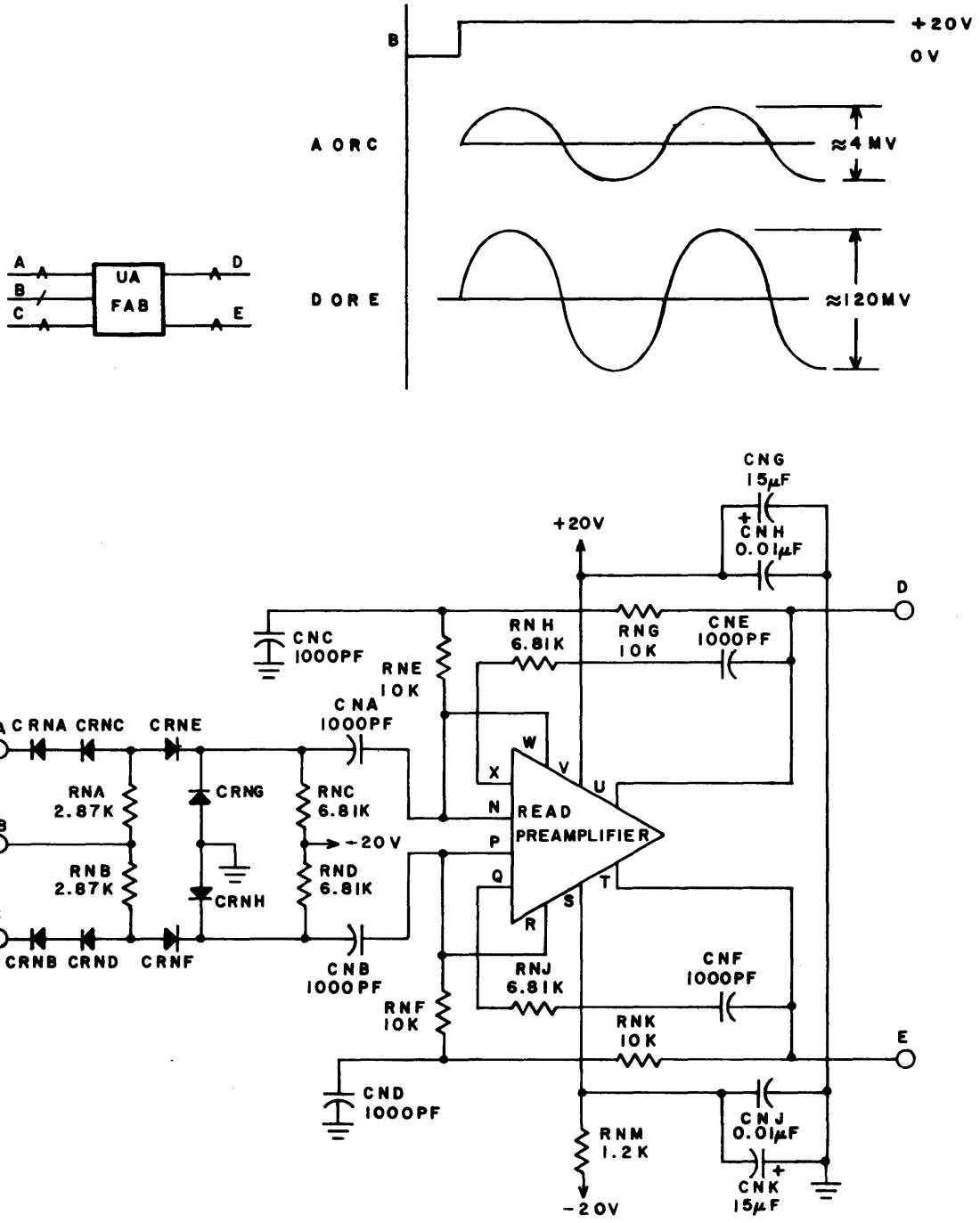

NOTE: VOLTAGE AND COMPONENT VALUES ARE FOR REFERENCE ONLY.

5C31

Figure 7-8. Low Level Amplifier - FAB

Gated Intermediate Level Amplifier - GJA

The GJA circuit (Figure 7-9) is an analog gate that is controlled by input B. When input B is +20v, both transistors are on. All analog signals pass through the circuit. Capacitors CNA and CNB ensure that only analog signals are passed. CNC filters noise spikes from the gating signal. Dc power for the transistors is supplied by the circuit in the next stage.

When input B is +0.2v, both transistors are off. No signals pass through the circuit.

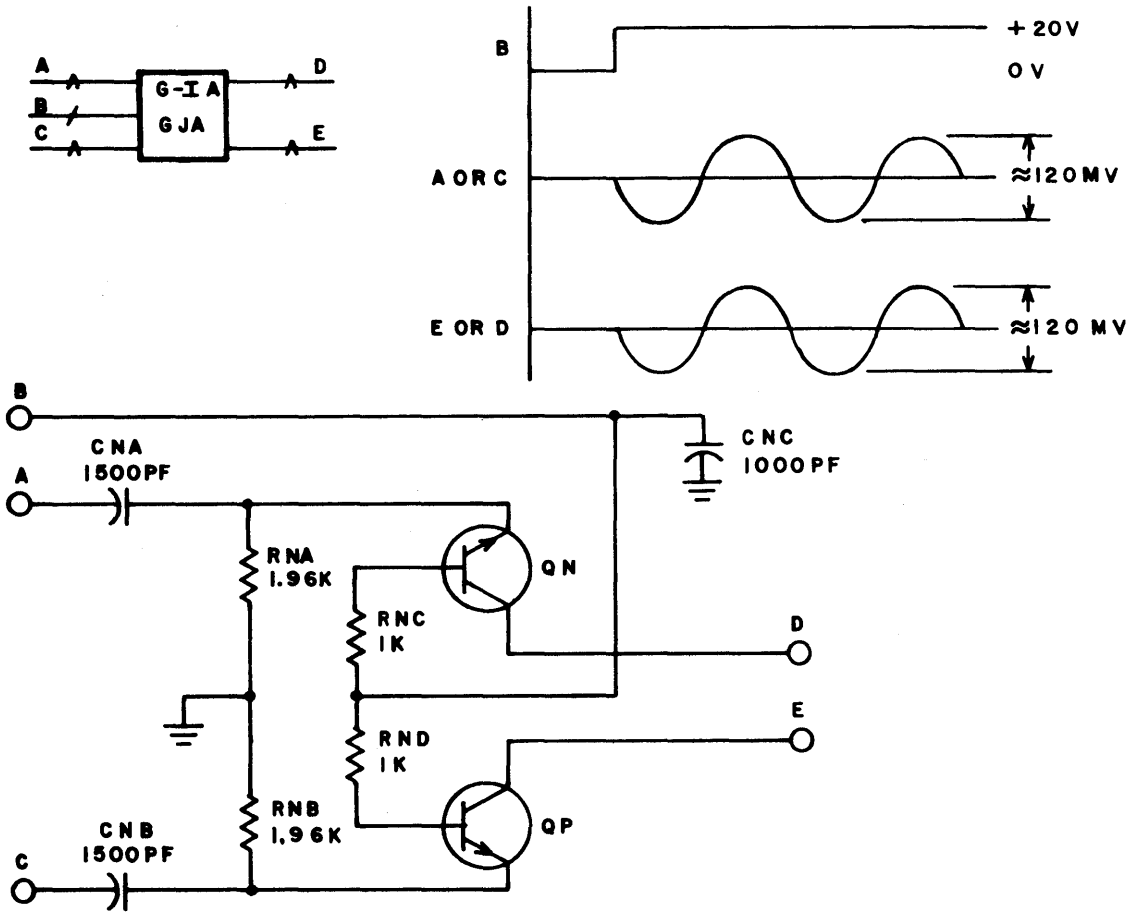

Figure 7-9. Gated Intermediate Level Amplifier - GJA

High Level Amplifier - HAA

The HAA circuit (Figure 7-10) is gated by an analog gate circuit (GJA) and provides the load and biasing for that circuit.

The preamplifier, ac feedback and dc feedback are identical to the FAB circuit. Capacitor CND is added to the output of the second stage to decouple high frequency noise.

High Level Amplifier - HAB

Input to the HAB circuit (Figure 7-11) is a balanced square wave. Output is also a balanced square wave that follows the input.

When input A is positive, B is at 0v. Transistor QN is on and QP is off. The base of QQ falls to near ground. Transistor QQ is off. Output C rises to approximately +0.7v. With QP off, QR turns on. Output D falls to ground.

When input B is positive, A is at ground. Transistor QN is off, QP is on, QQ is on and QR is off. Output C is at ground. Output B rises to +0.7v.

High Level Amplifier - HJA

The HJA circuit (Figure 7-12) increases the input signal power to transmit over a coaxial cable. The input is a differential signal of approximately 3.6v peak to peak.

The input signal across A and B is divided between resistors RNA and RNB. Transistors QN and QP are forward biased with a gain of 3. The -20v through resistor RNH and diodes CRNA and CRNB and through resistor RNJ and diodes CRNC and CRND forward biases QQ and QT, respectively. Transistors QQ and QT are in a common collector configuration to provide a current gain.

Transistors QR and QS are emitter followers that draw very little current from QQ and QT. They provide low impedance for discharging CNC and CND, thus reducing delay time when crossing the zero volt point.

Output voltage is approximately the same as input voltage. Output current is 20 ma maximum.

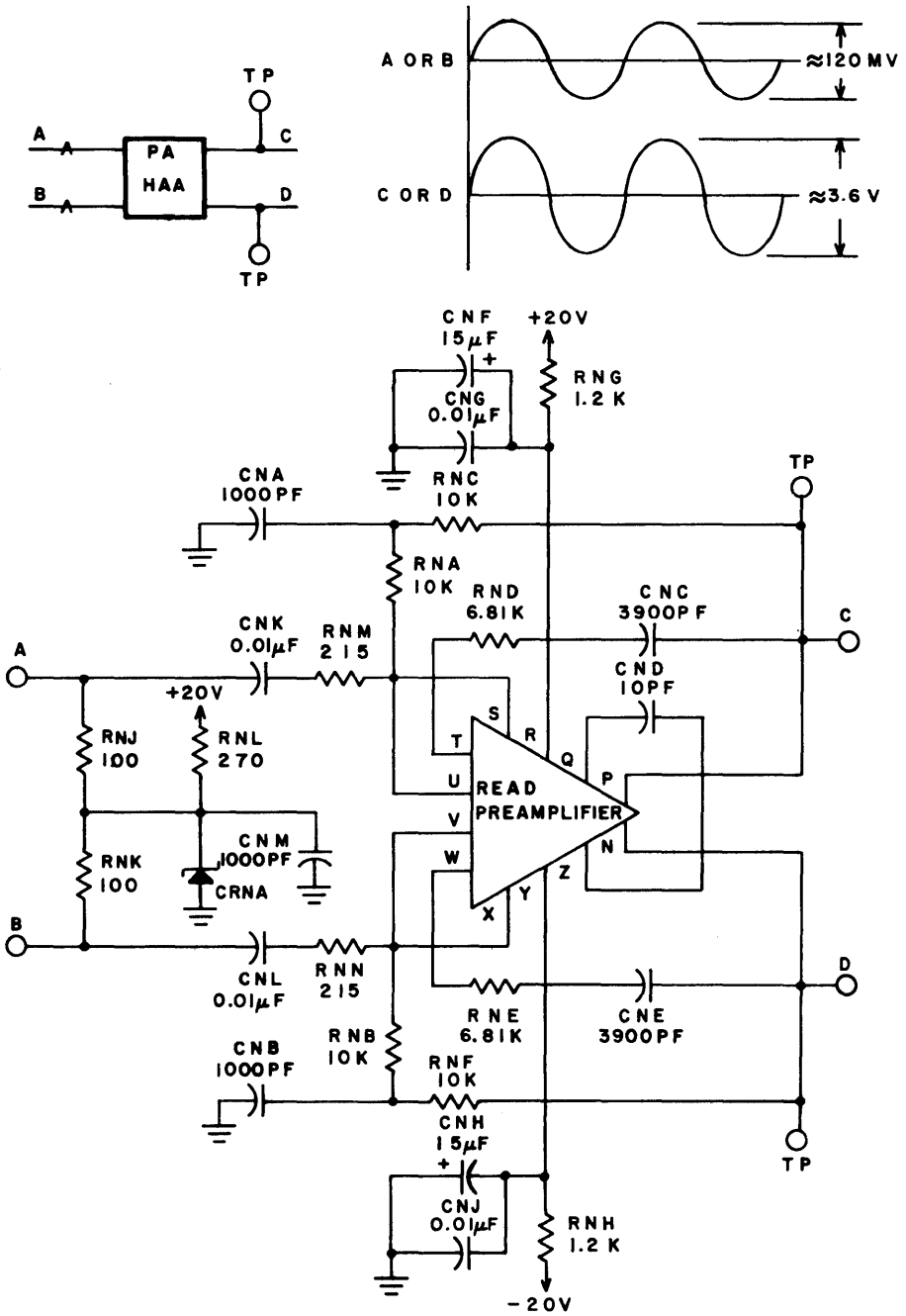

NOTE: VOLTAGE AND COMPONENT VALUES ARE FOR REFERENCE ONLY.

5C30

Figure 7-10. High Level Amplifier - HAA

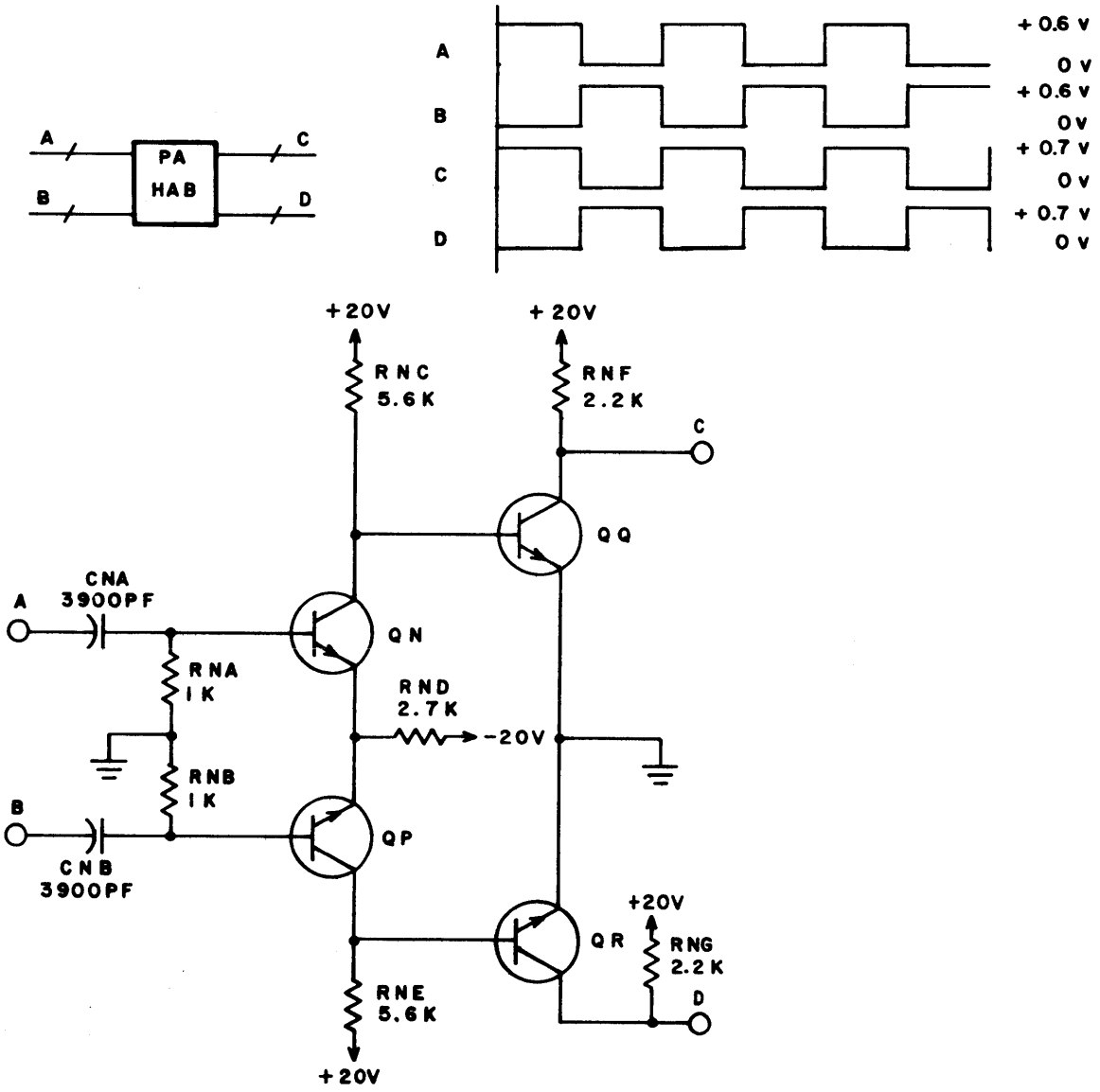

5C25

Figure 7-11. High Level Amplifier - HAB

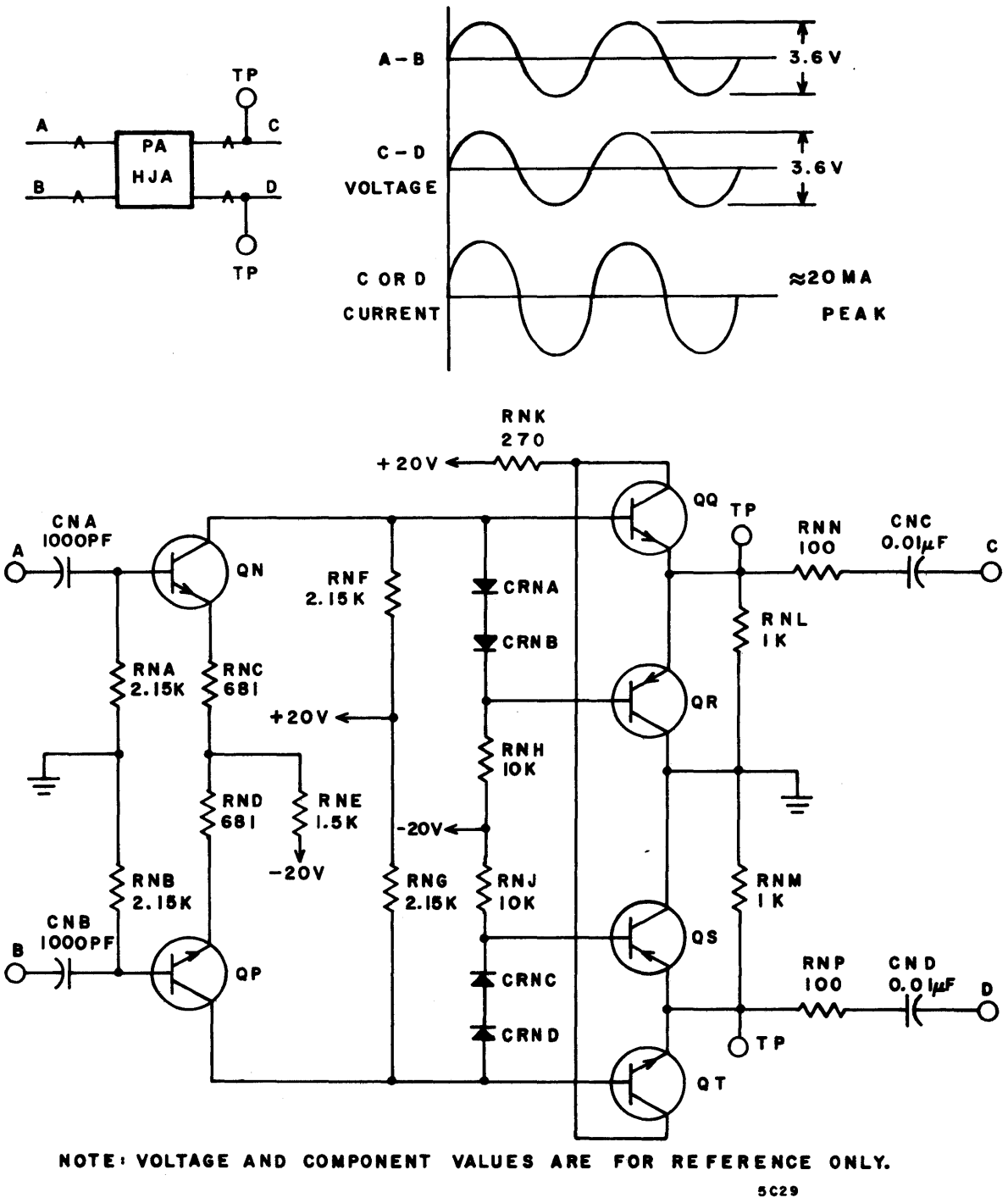

Figure 7-12. High Level Amplifier - HJA

Lamp Driver - IAA

The IAA Circuit (Figure 7-13) sinks a current of 91 ma to drive a lamp. Capacitor CNB slows down switching time of QS and provides a ramp output to prolong the life of the lamp. A "1" input at either A or B or both lights the lamp. Only when both A and B are "0" is the lamp extinguished.

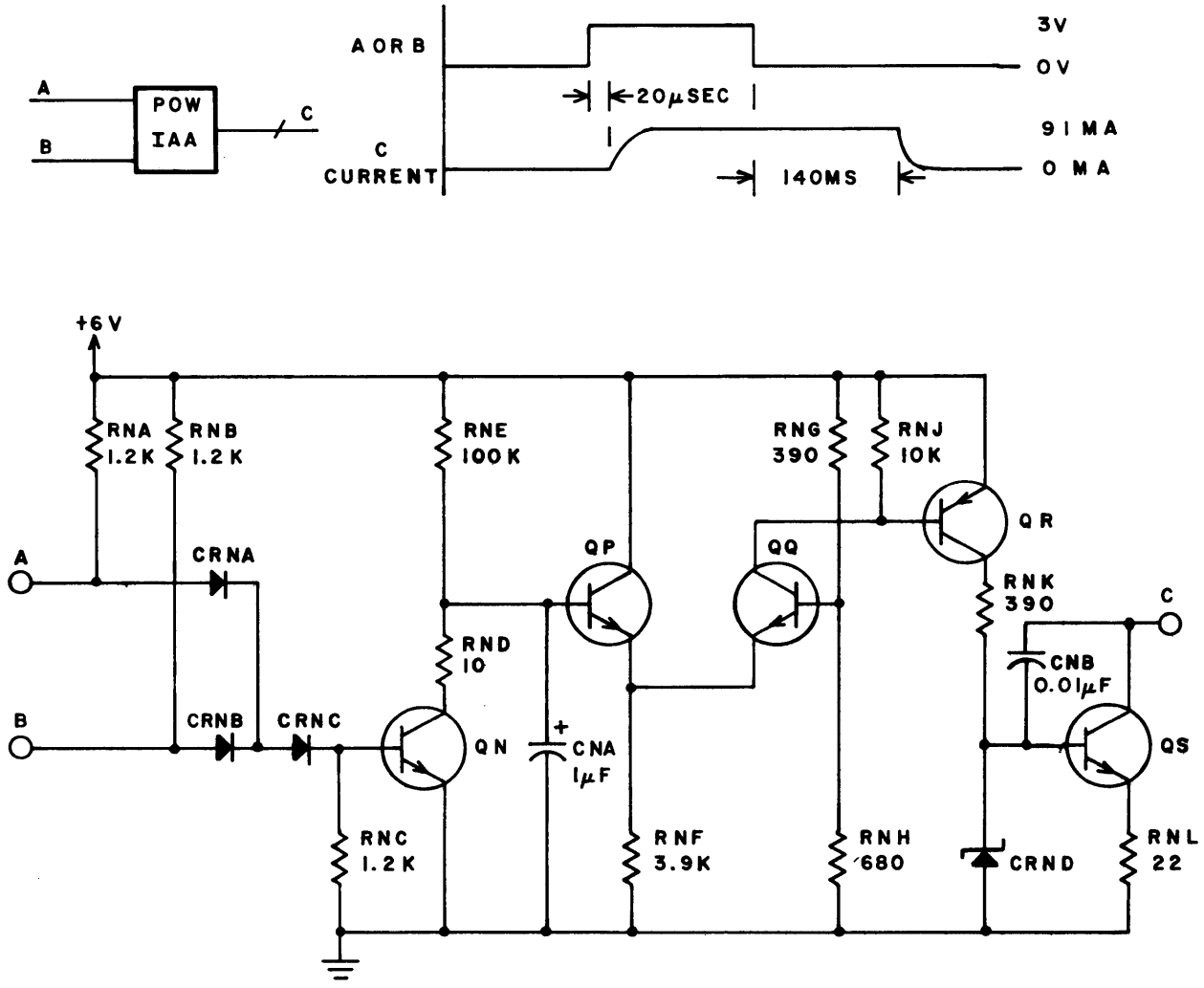

Figure 7-13. Lamp Driver - IAA

A "1" at either or both inputs turns QN on. CNA discharges through RND and QN. The base of QP goes to ground. Transistor QP is off, so the base of QQ (3.8v) is more positive than its emitter. Transistor QQ is on, causing current to flow through RNJ. The voltage drop across RNJ (approximately 0.7v) turns QR on. Transistor QS turns on. Zener diode CRND clamps the voltage across RNL at 2.0v, which is a current of 91 ma.

A "0" at both inputs turns QN off. CNA charges through RNE until QP turns on. With QP on, QQ, QR and QS are off. No current flows in the lamp.

Lamp Driver - IBA

The IBA circuit (Figure 7-14) sinks a constant load current of 200 ma. Capacitor CNA ramps the output to prolong the life of the lamp connected to output B.

A "1" on input A turns QP on. The base of QN is at ground. Transistor QN is off. The base of QR is clamped at +2.7v by Zener diode CRNC. Transistor QR is on. A 2-volt drop across RNE assures a 200-ma current.

A "0" on input A turns QP off. The collector clamps at +0.7v when QN turns on. The base of QR goes to ground. Transistor QR is off. No current flows.

Lamp Driver - ICA

The ICA circuit (Figure 7-14) functions as a switch supplying current to a lamp at output B. When input A receives a "0" (ground) signal, the lamp turns on. When input A receives a "1" (+3v) signal, the lamp turns off.

Output B is connected through a lamp to a voltage supply, typically +20v. When input A receives a "0" signal, transistor QN turns off. This allows the +6v supply to forward bias transistor QR through resistor RND. Transistor QR turns on, conducting current from the voltage supply, through the lamp and RNE to ground. The lamp lights.

When input A receives a "1" signal, QN turns on. Transistor QN conducts current away from the base of QR, removing the forward bias. Transistor QR stops conducting. The lamp goes out.

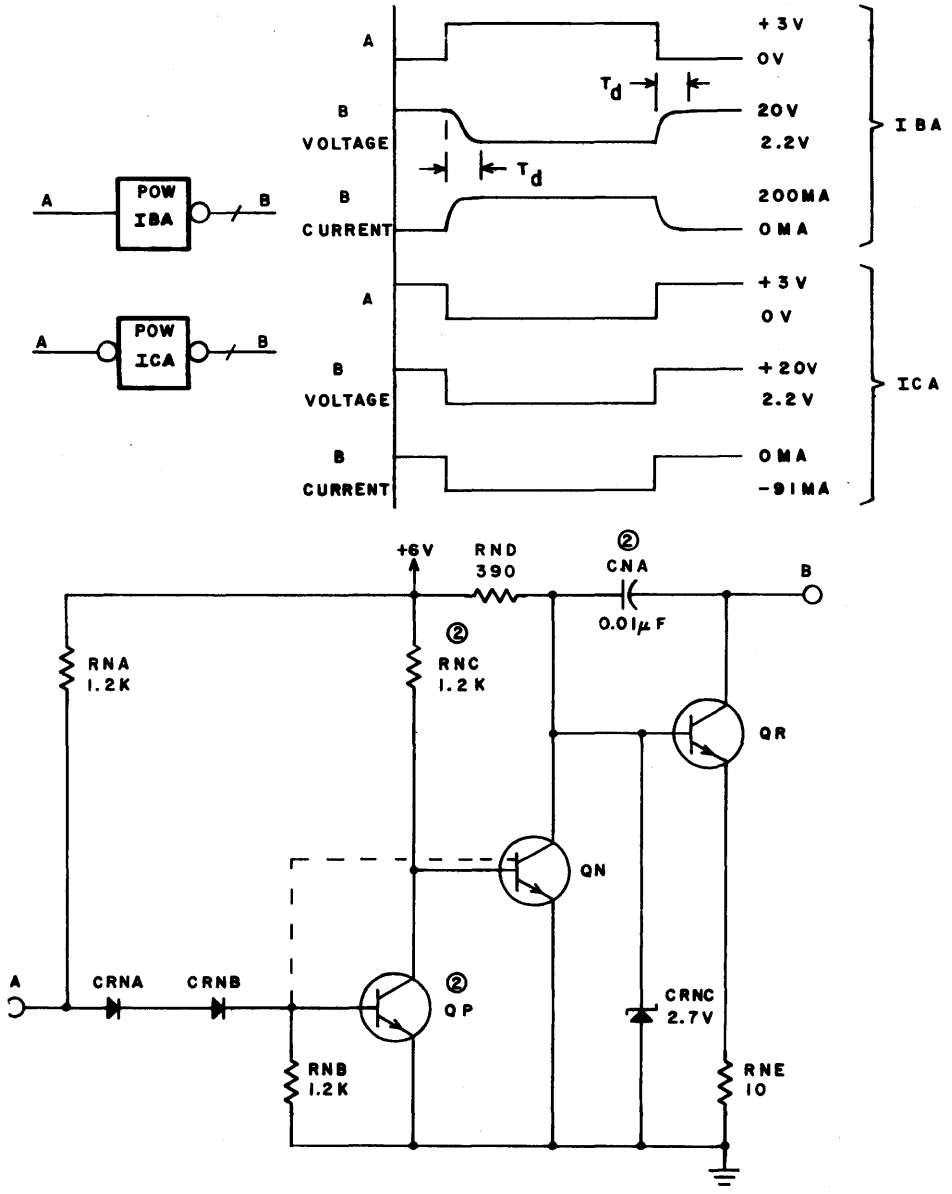

NOTES:

1. VOLTAGE AND COMPONENT VALUES ARE FOR REFERENCE ONLY.
2. COMPONENT AND CONNECTING WIRES NOT USED ON ICA. DOTTED LINE SHOWS QN BASE CONNECTION FOR ICA. ENTIRE CIRCUIT (LESS DOTTED LINE) FOR IBA.

SC5

Figure 7-14. Lamp Driver - IBA, ICA

The voltage drop across RNE when QR conducts is directly proportional to the load current. At a load current of 200 ma, the voltage across RNE is 2 volts. The base of QR cannot go more positive than +2.7v because of Zener diode CRNC. Therefore, QR starts losing its forward bias when the load current reaches 200 ma (2 volts across RNE). Transistor QR is thereby protected against a short circuit.

Low Speed Driver - IDA

The IDA circuit (Figure 7-15) acts as a switch. Outputs B and C are connected through external resistors and a common load (typically a solenoid) to an external voltage supply. A "1" at input A causes current to flow through the external load. A "0" at input A shuts off the current flow.

A "0" at input A turns off transistor QN. The emitter and base of QP are both at +6v. Transistor QP is, therefore, not conducting, which keeps QT from conducting. The left side of capacitor CNA charges to +6v, while the right side is held at approximately +0.7v by resistor RNH and the base-emitter voltage drop across QQ. Transistor QQ is held on by the current through RNH, driving the base of QR to ground. Transistor QR is off. The base of QS is at ground and is off. No current flows through the external load.

A "1" at input A turns on transistor QN. The base of QP goes to ground, turning QP on. This allows the +6v supply to flow through RNE to the base of QT, turning it on. Then, 200 ma of current flows through the external load and QT to ground.

When the collector of QN goes to ground, the left side of CNA also goes to ground. This back biases the base-emitter junction of QQ by approximately 5.3v (the original voltage across CNA). Transistor QQ turns off, allowing the base of QR to go positive. Transistor QR turns on and drives the base of QS positive. Transistor QS turns on and allows an additional 850 ma of current through the external load and QS to ground.

The base of QQ then rises toward +6v through the charging action of resistor RNH on CNA. When the base of QQ reaches +0.7v, QQ turns on and QR turns off. This stops the current flowing through QS by driving the base of QS to ground. The 850 ma of current through QS lasts approximately 7 ms.

CNB limits the rise and fall time of the 850-ma current pulse.

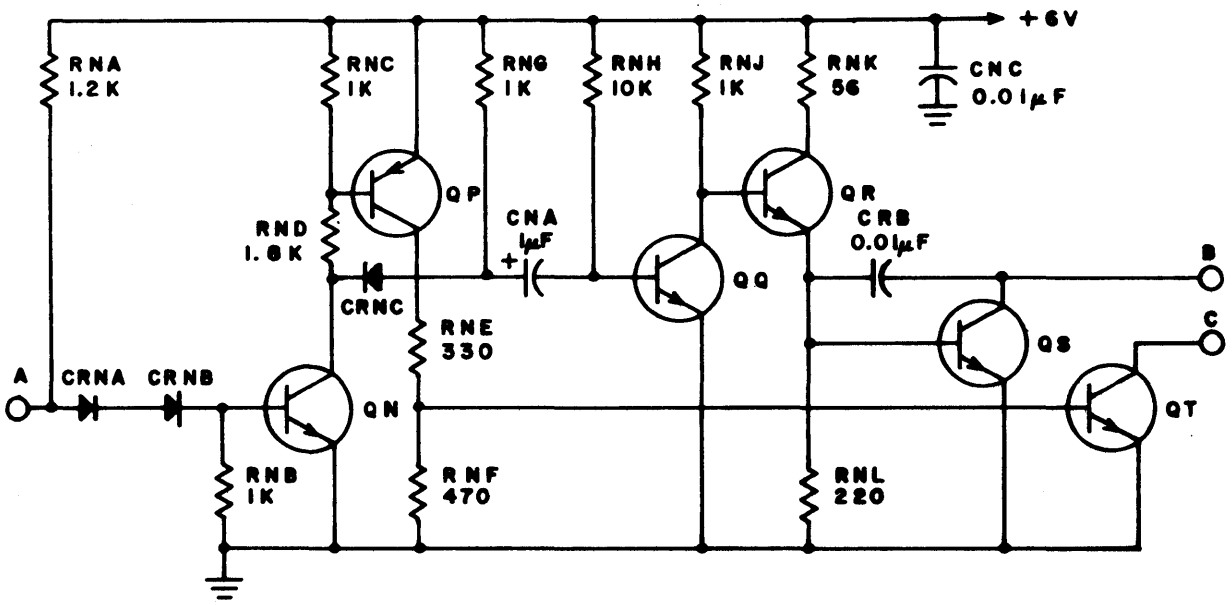

NOTE: VOLTAGE AND COMPONENT VALUES ARE FOR REFERENCE ONLY.

5C19

Figure 7-15. Low Speed Driver - IDA

Write Driver - JAB

The JAB circuit (Figure 7-16) provides current to the write heads so that data may be recorded. Outputs E and F are connected to opposite ends of the write head, which is center tapped to ground. When input A is positive, current flows through output E to its half of the write head. When input B is positive, current flows through output F to its half of the write head. When A is positive and the unit is writing, B is negative. When A is negative and the unit is writing, B is positive. Therefore, only one half of the write head may be activated at any one instant while the unit is writing.

With a positive charge on input A transistor QN is off. The base of QR is positive and the emitter of QS is positive. The negative voltage at B turns transistor QT on. This drives the emitter of QR negative. Transistor QR conducts, driving the base of QQ to about -2v. Transistor QQ is an emitter follower, so the emitter of QQ is also near -2v. The -2v on the base of QP turns QP off. No current flows through output F (-20v through resistor RNA only reverse biases an external diode). With QT on, the base of QS goes slightly negative. Transistor QS is off, allowing the base of QU to go to +40v. Transistor QU is an emitter follower, so the emitter of QU also goes to about +40v. The +40v on the base of QV turns QV on. Current now flows from a +40v supply connected to output G through transistor QV and its half of the write head to ground. A resistor lies between output E and the write head to limit the current flow in the write head.

When input A goes negative and B goes positive, QN and QS are on and QR and QT are off. On the bases of QQ and QU are currents of +40v and -2v, respectively. The emitter of QQ goes to about +40v. The emitter of QU goes to about -2v. Transistor QV is off. No current flows through output E. Transistor QP is on. Current flows from the +40v source connected to output G through QP and its half of the write head to ground.

Input D supplies a negative voltage when the unit is writing to reverse bias diodes CRNA and CRNF. If the unit is not writing, D is grounded and both inputs A and B go negative. This turns on QR and QS. Transistors QP and QV are, therefore, off and no current flows through the write head.

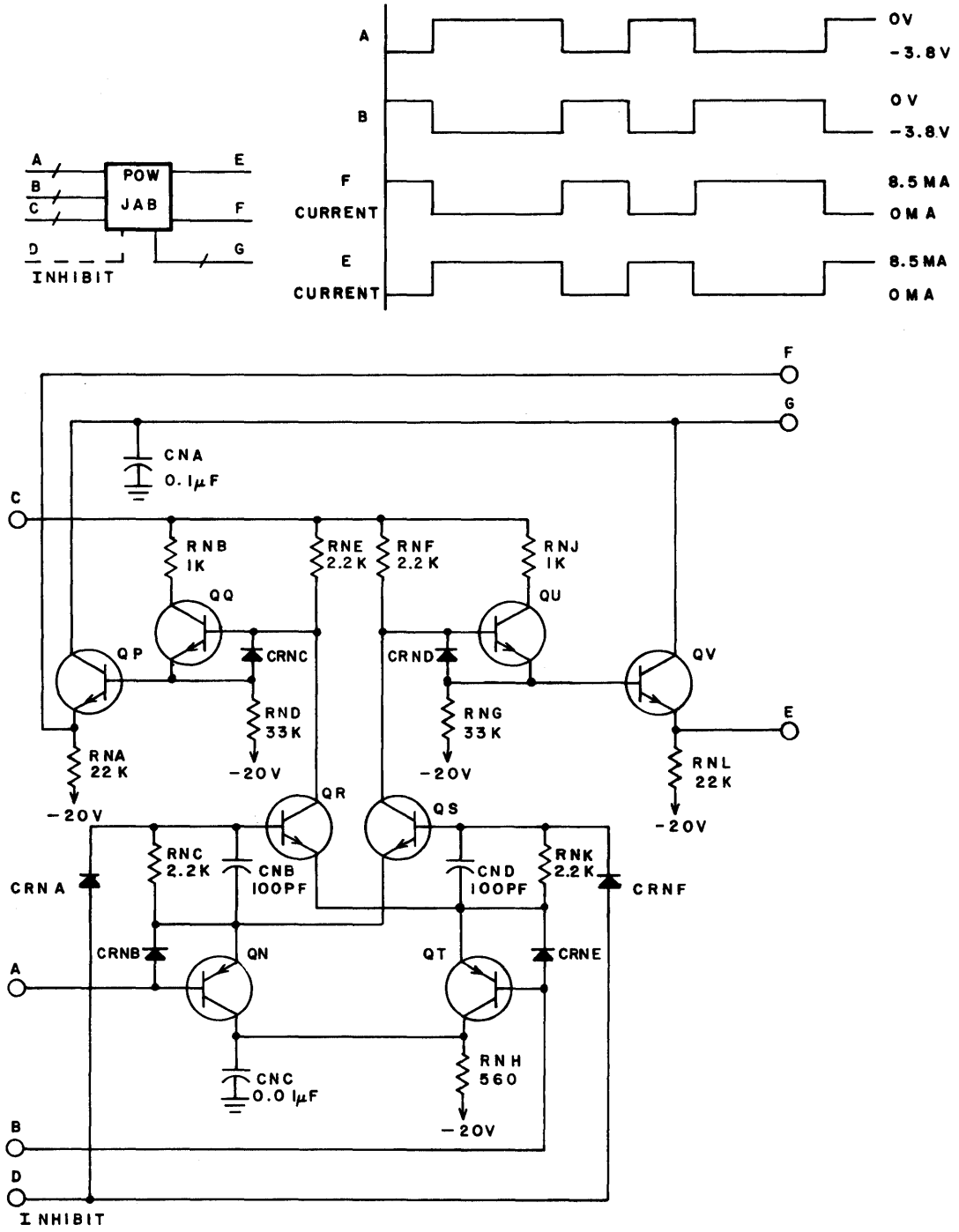

NOTE: VOLTAGE AND COMPONENT VALUES ARE FOR REFERENCE ONLY.

5C55

Figure 7-16. Write Driver - JAB

Erase Driver - JBB

The JBB circuit controls the current driving the erase heads. When input E (Figure 7-17) is a high voltage, output H provides current to erase heads.

When input E goes to a high voltage, capacitor CPA charges, causing a 10-μsec delay before transistors QR and QP turn on completely. Output G is connected to a +40v supply in a fault detect circuit. When QR is on, current flows from G through QR to the erase head connected to output H. The ramp output protects the information on neighboring tracks from being destroyed.

When E drops to 0v, CPA discharges through RPA. After 10 μsec, QP and QR are off. Output H is at 0v.

Line Transmitter - LAA

The LAA circuit (Figure 7-18) provides a positive voltage output at C and a negative voltage output at D when either A or B or both are a "1" input. When A and B are both "0", the output is determined by the external load circuit connected to C and D.

If both A and B are "0", QN is off. The base of QP goes positive and QP conducts. This causes the emitter of QQ to be more positive than its grounded base. Transistor QQ conducts. The collector voltages for QP and QQ will be approximately +0.9v and +0.2v, respectively. The difference in collector voltage is due to the positive charge on the base of QP and the grounded base of QQ. RNC is smaller than RND to compensate for this voltage difference. The emitters of QR and QS will be at +2.4v and -4.0v, respectively. The base of QR is held at about +4.9v by RNF and RNE. The base of QS is held at about -4.9v by RNG and RNH. Both QR and QS are off. The voltage at C and D is, therefore, dependent on any external voltage supply that may be present.

If either or both of the inputs go to "1", QN turns on. Current flows away from the base of QP turning QP off. Transistor QQ is, therefore, off. Transistors QR and QS are then forward biased and conduct about 25.0 ma of current. CRND and CRNE are forward biased and the output at C goes positive, while the output at D goes negative. The voltage of either output is determined by the current flow through the external load, but must be kept under 4.9v.

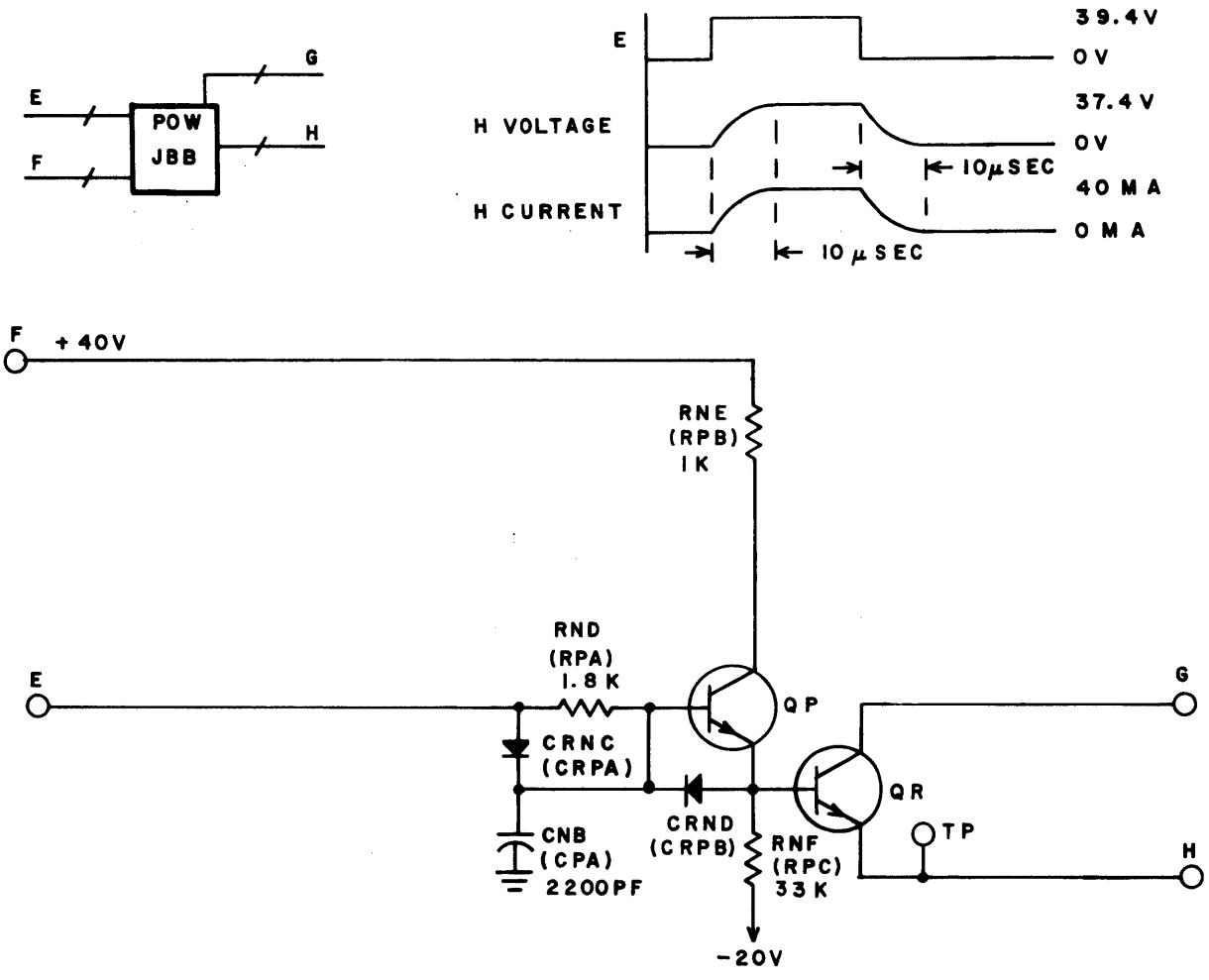

NOTES:

1 VOLTAGE AND COMPONENT VALUES ARE FOR REFERENCE ONLY.

Figure 7-17. Erase Driver - JBB

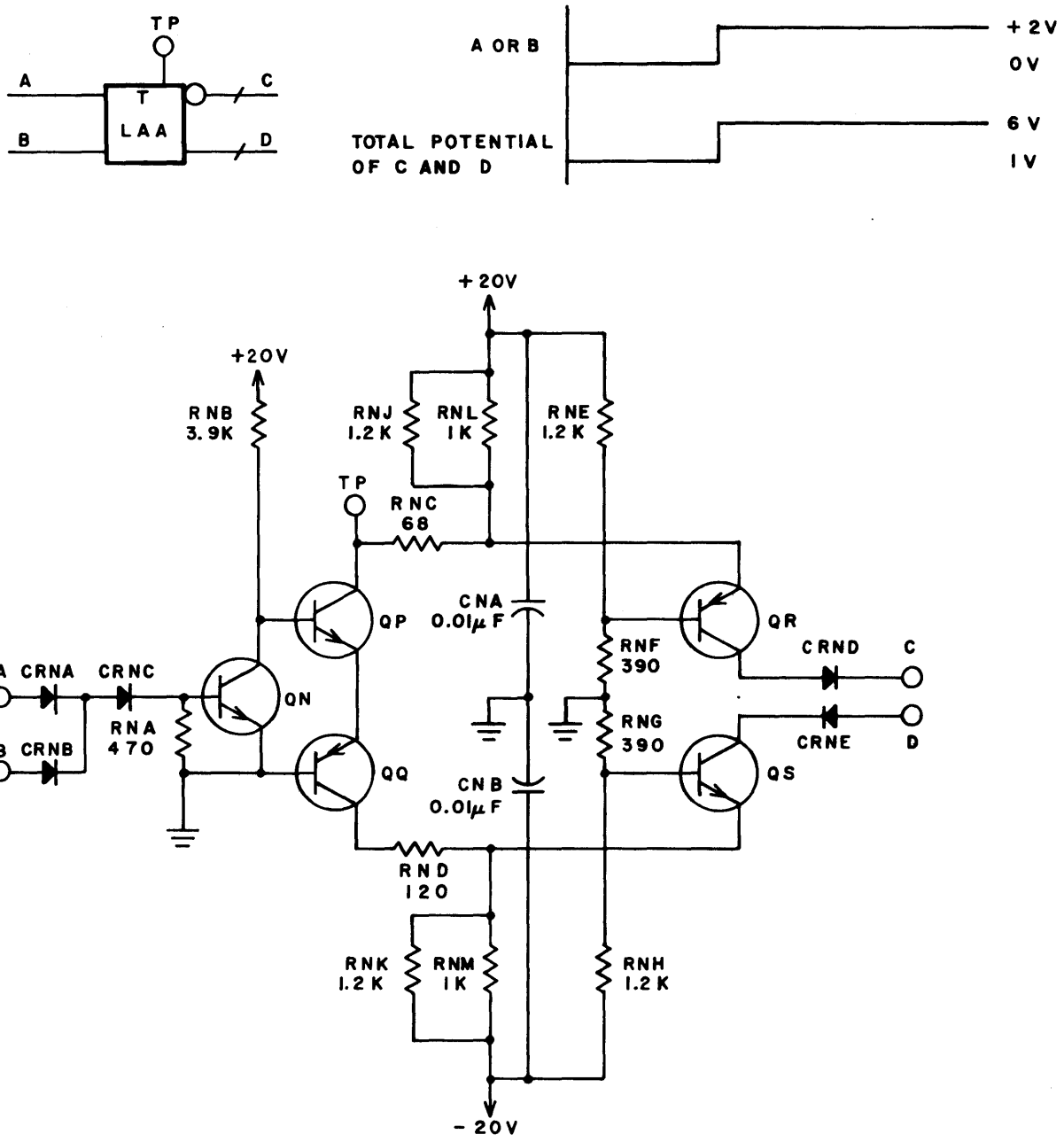

NOTE: VOLTAGE AND COMPONENT VALUES ARE FOR REFERENCE ONLY.

5C20

Figure 7-18. Line Transmitter - LAA

Oscillator - MAA

The MAA circuit (Figure 7-19) produces an amplified, oscillating signal at a prescribed frequency. The circuit description is divided into three parts: the D. C. conditions throughout the circuit; the oscillator section of the circuit; and the amplifier circuit.

D. C. Conditions

CRNA, RNA, RNB and RND hold the base of QN at approximately +17 volts. CRNB is reverse biased by 3 volts and does not conduct. The emitter of QN is held at about +16v, producing a collector current in QN of about 16 ma.

The base-emitter voltage drop across QR holds the base of QR near +0. 7v. The current through RNH is then 5. 1 ma. With the base current of QR at a low level, the 5. 1 ma must flow through RNJ. The voltage at the junction of the emitters of QP and QS must then be about +10v. To maintain this +10v, the collector voltage of QR must be near +10v. The collector current of QR is, therefore, 5. 55 ma.

Oscillator

Transistor QN acts as an emitter follower yielding a high current gain with nearly no voltage loss. CNB, CNC, and LNA form a resonant network. Near the resonant frequency, the signal voltage at the junction of LNA and CNB can be much greater than the voltage through RNE in the feed-back portion of the circuit. The gain around the loop formed by QN, RNE, CNB and LNA is greater than 1. The system, therefore, oscillates. When the signal at the base of QN exceeds 6v peak to peak, QN approaches saturation, thereby limiting the amplitude of the oscillation.

Amplifier

Transistor QR is a common emitter amplifier. The output of QR is directly connected to the bases of QP and QS. Transistors QP and QS are emitter followers that provide a low impedance output. Capacitor CNF isolates dc voltages from the load.

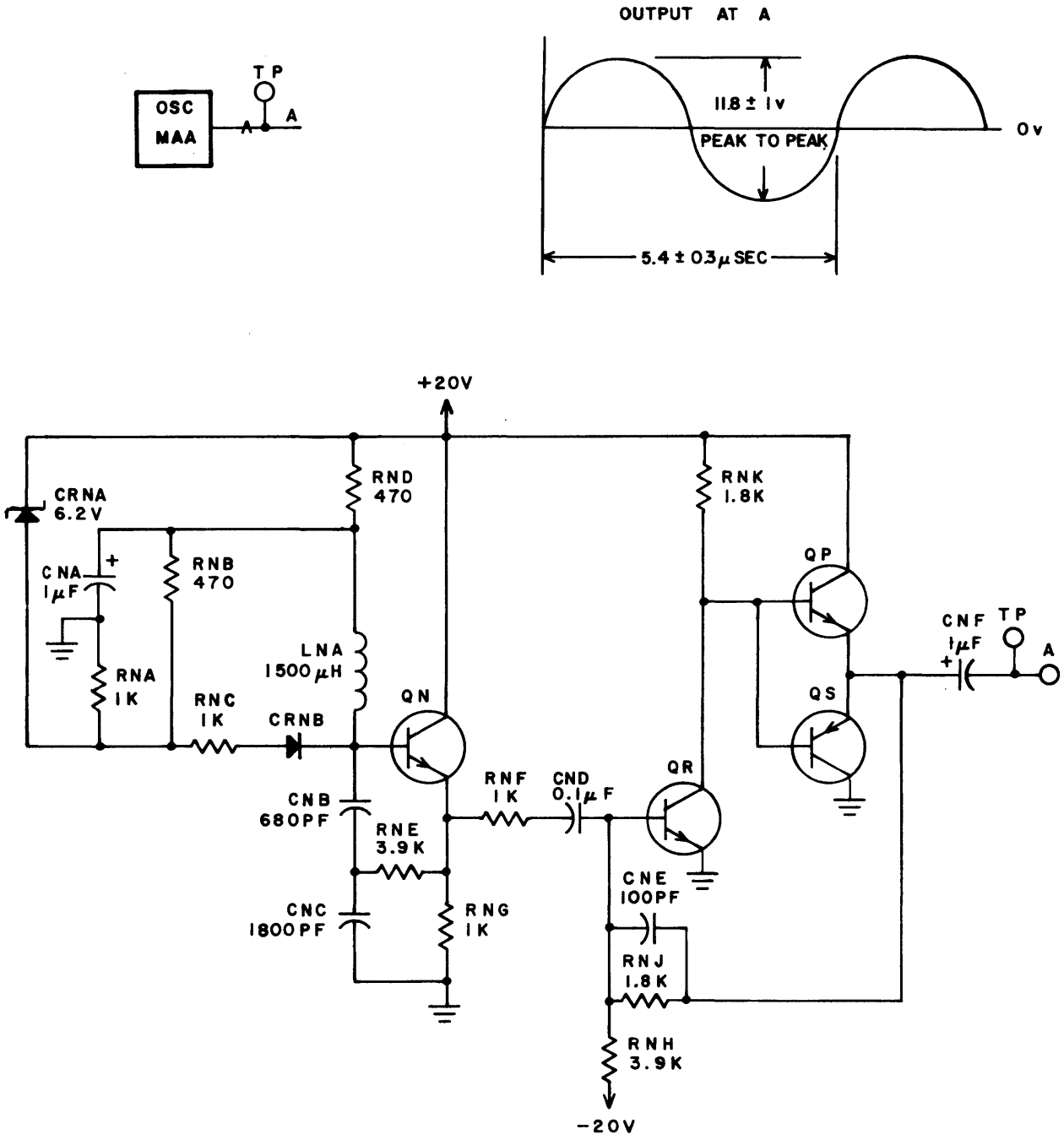

NOTE: VOLTAGE AND COMPONENT VALUES ARE FOR REFERENCE ONLY.

5C18

Figure 7-19. Oscillator - MAA

Waveform Generator - MBA

The MBA circuit (Figure 7-20) is a waveform generator whose output at C is normally at "0" when both inputs A and B are at a "0". When either or both of the inputs go to a "1", a "1" pulse is created at output C for a predetermined length of time.

When both inputs are at "0" (ground), transistor QN is turned off. Transistor QP is forward biased by the +6v source through RNF. Transistor QP then conducts current from output C directly to ground. The output is a "0". During this period the left side of CNA goes to about +5v, while the right side is held at +0.7v by the base-emitter voltage drop across QP.

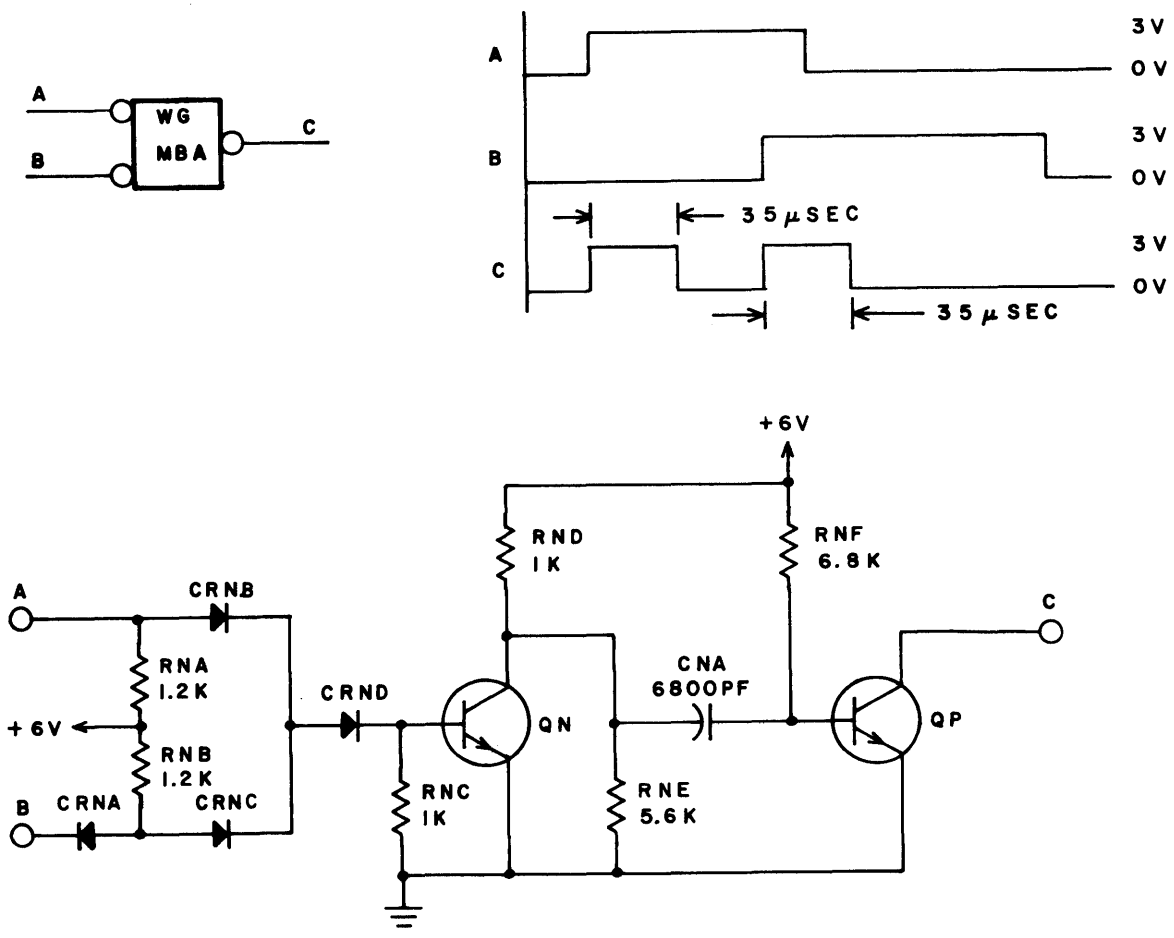

Figure 7-20. Waveform Generator - MBA

When either or both of the inputs experience a "1", QN turns on. Transistor QN then conducts current away from the left end of CNA, driving it to approximately ground. The voltage across CNA cannot change immediately, so that base of QP goes to about -4.3v, turning QP off. With QP not conducting the output goes to a "1" (voltage is supplied by the circuit driven by MBA). CNA now charges through RNF until the base of QP reaches approximately +0.6v. Transistor QP then begins to turn on and the output falls back to "0". The pulse width in this case is about 35 usec.

When both inputs return to "0", QN is again turned off. The left side of CNA goes toward +5v through the voltage divider formed by RND and RNE. The right side of CNA is again held at +0.7v by the base-emitter voltage drop across QP.

Adjustable Waveform Generator - MBC

The MBC circuit (Figure 7-19) is a tuned amplifier which is rung by the negative clock and data pulses present at input A.

The tank circuit connected to the collector of QN is tuned (and is adjustable) to twice the frequency of the input data pulses (each data pulse falls between two clock pulses; absence of a data pulse is interpreted as a zero). The high Q of the circuit provides a fly wheel effect and yields a sinusoidal signal that is almost totally free of peak shift.

Transistors QP and QR form a zero-crossing detector, emitter follower circuit that provides high impedance so as not to distort the sine wave. The circuit clips the positive half of each sinusoidal excursion so that the signal at the TP is a half-wave rectified sine wave.

The transistor in the output load (next circuit) functions to clamp this rectified signal and to provide what is nearly a square wave output at B.

Quantizing Detector - QAA

The input at A to the QAA circuit (Figure 7-22) is an AC signal. When input A is positive, output B is a "0" or ground. When input A is a null, output B is a "1".

When input A is positive, transistor QN is off. The base of QR goes toward -20v, but is held at about -0.7 volts by CRNA. Transistor QR is, therefore, off. This allows the base of QP to go positive. Transistor QP turns on, leaving output B at ground.

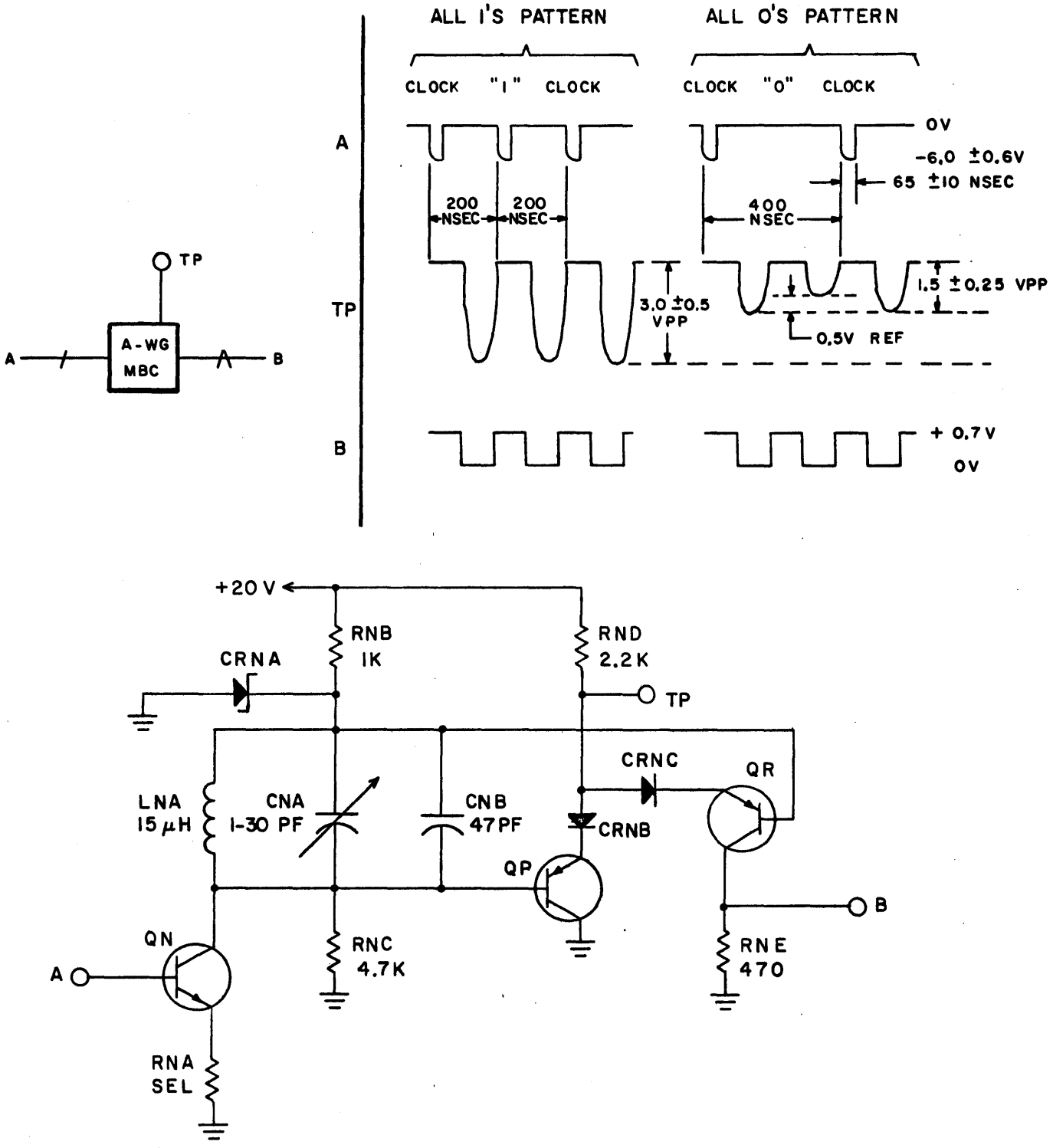

NOTE: VOLTAGE AND COMPONENT VALUES ARE FOR REFERENCE ONLY.

5C127A

Figure 7-21. Adjustable Waveform Generator - MBC

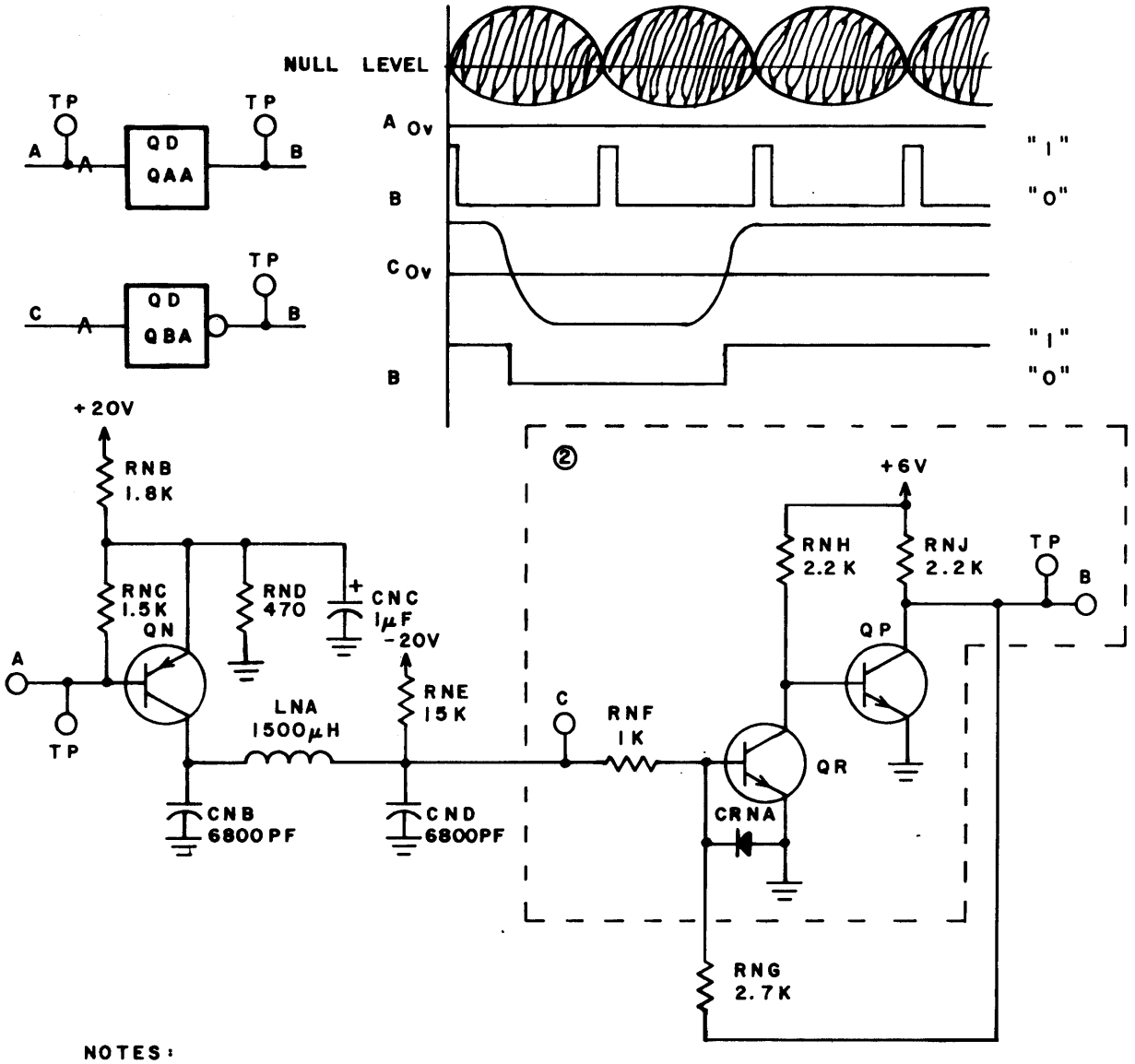

NOTES:

1. VOLTAGE AND COMPONENT VALUES ARE FOR REFERENCE ONLY.
2. QAA USES ENTIRE SCHEMATIC. DOTTED LINE ENCLOSES SCHEMATIC FOR QBA.

5C16

Figure 7-22. Quantizing Detector - QAA, QBA

When the signal on input A drops to a null, QN turns on, applying a positive charge across CNB. CNB, LNA and CND filter the signal to remove any variations in the envelop on the input signal (waveform A). When CND charges to a positive voltage, QR turns on. This drives the base of QP to ground. QP turns off, allowing current to flow from the +6v source through RNJ to output B. A "1" (+3v) appears at B.

Quantizing Detector - QBA

The QBA circuit (Figure 7-22) gives a "0" output at B when input C is negative. When input C is positive, output B will be a "1".

With a negative input at C, the base of QR is negative. The negative voltage is limited to about -0.7v by CRNA. Transistor QR turns off, driving the base of QP positive. Transistor QP, therefore, conducts current from the +6v source through RNJ to ground. Output B is at ground, or a "0".

With a positive signal at input C, the base of QR is positive. Transistor QR conducts current from the +6v supply through RNH to ground. The base of QP is, therefore, at ground and QP is off. A voltage of +3v is therefore felt at output B (a "1").

Quantizing Detector - QCA

Inputs A and B of the QCA circuit (Figure 7-23) are connected to the outputs of a sector transducer preamplifier. Each time a sector is detected by the transducer, a 55-μsec "1" (+3v) pulse appears at output C. The input at A and B is an analog signal. The output at C is a standard logic signal.

With a 0-volt differential input across A and B, diode CRNA holds transistor QP off, while transistor QN is on. The collector of QP is at about +19v. Transistor QR is, therefore, off. The base-emitter junction of QS is reversed biased through resistor RNJ. Transistor QS is off. Transistor QT is turned on by the forward bias supplied through resistor RNQ and diode CRND. With QT on, diode CRNF is forward biased and conducts current from output C through QT to ground. The output is near ground, or a "0".

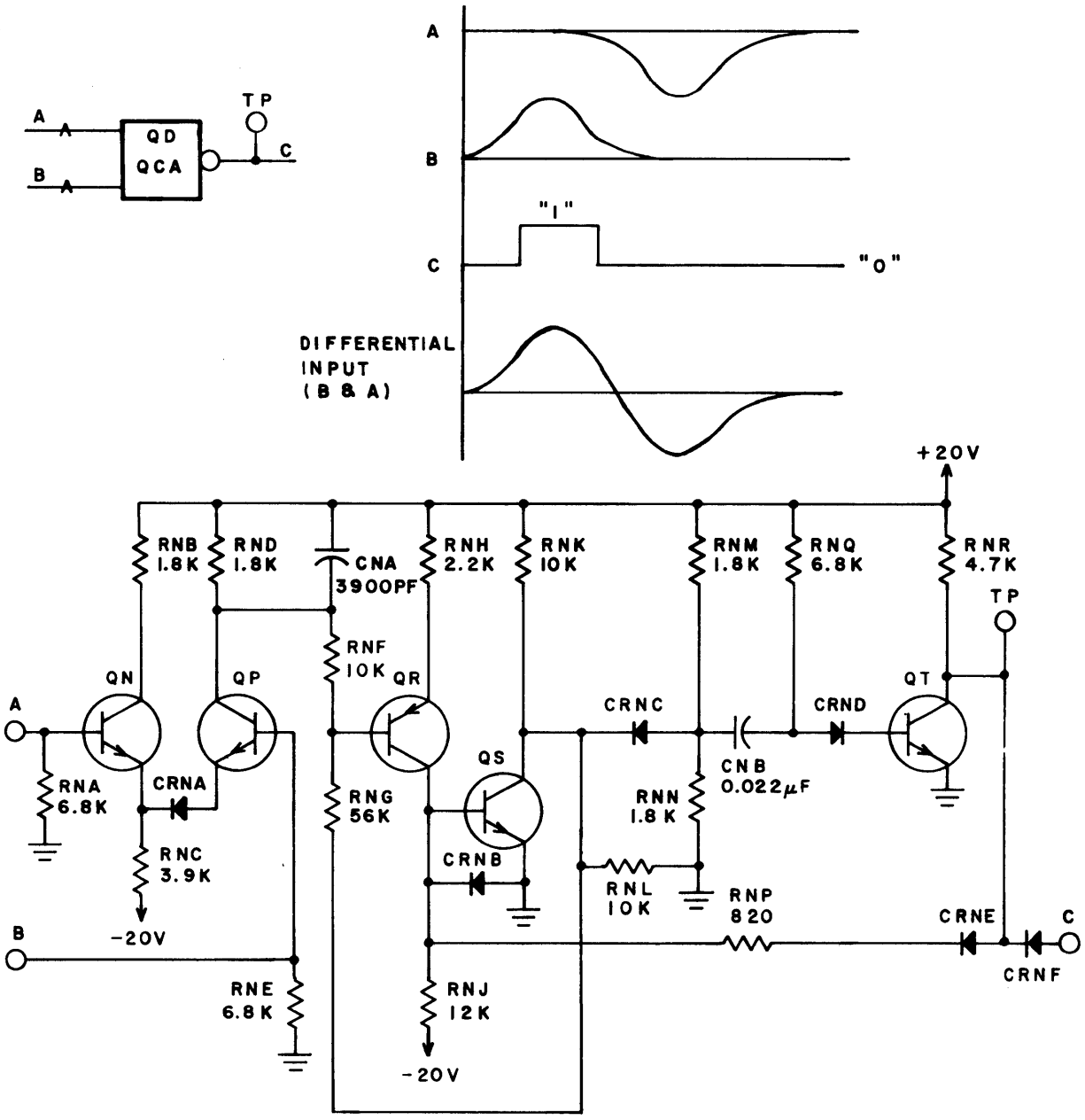

NOTE: VOLTAGE AND COMPONENT VALUES ARE FOR REFERENCE ONLY.

5C22

Figure 7-23. Quantizing Detector - QCA

When a sector mark appears, the differential voltage across inputs A and B rises with B more positive than A. Transistor QP turns on and its collector voltage falls to about +11v. The drop in voltage is felt at the base of QR. Transistor QR turns on, raising the voltage on the base of QS. Transistor QS turns on. Transistors QS and QT comprise a single shot circuit whose pulse width is determined by resistor RNQ and capacitor CNB. Transistor QT turns off, reverse biasing diode CRNF. Output C rises to a "1" level. After 55 μsec, CNB charges sufficiently to turn on transistor QT. Diode CRNF is again forward biased and the output returns to a "0". Resistor RNP provides feedback to keep QS on while QT is off.

Speed Detector - QDA

The QDA circuit (Figure 7-24) monitors sector pulses to determine whether the spindle is at a predetermined speed. If the spindle is below speed, no output is present. When the spindle reaches the desired speed, an output current activates the speed relay which signals the controller that the unit is up to speed.

Each time a sector is sensed, a short "1" pulse is applied at input A. Transistor QN conducts and completely discharges capacitor CNA through RND to ground. When the pulse is removed, CNA charges through RNC. When the base of QP reaches the voltage at the base of QR, QP and QQ turn off. Transistor QR conducts current to silicon controlled rectifier CRM, turning it on. CRM draws current from the base of QS driving it to ground, and from the base of QR through RNK. The base of QR falls to about 9.03 volts. OR then turns on firmly and prevents "runt spikes" on the signal to CRM. Once CRM is turned on, CNB begins discharging through RNM and CRM. CRM remains on until the discharge current from CNB falls below the holding current of CRM (typically 1 ma). With the base of QS near ground, QS conducts. Transistor QT turns off, QU is on, and QV is off. No output signal is felt at B.

If the spindle is below speed, pulses arrive at the input at a low repetition rate. CNA repeatedly discharges and recharges to the point where QP and QQ are turned off. The output of QR is a series of positive pulses with a pulse width determined by

$$T = T_I - T_C$$

where T_I is the time between input pulses and T_C is the time for CNA to change to the point where QP is turned off. The pulses repeatedly trigger CRM. CRM holds the voltage at the base of QS below the point where QS can turn off. Since QS is constantly on, QV is constantly off. No output is felt at B.

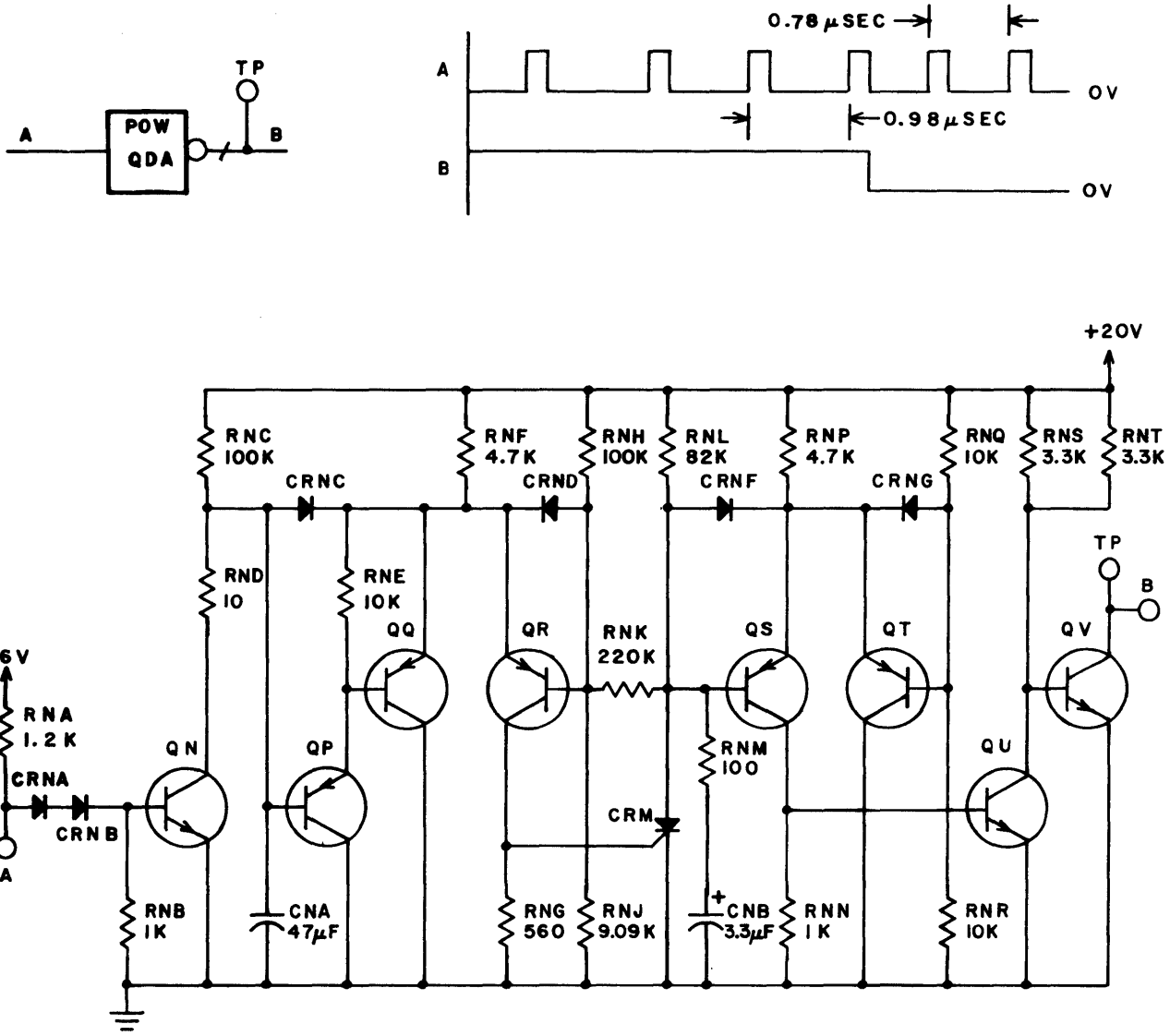

NOTE: VOLTAGE AND COMPONENT VALUES ARE FOR REFERENCE ONLY.

5C9

Figure 7-24. Speed Detector - QDA

When the spindle reaches the required speed, the pulses at input A have the same period as T_C. The pulse width out of QR becomes $T_I - T_C = 0$. Transistor QR never emits a pulse. With no pulses out of QR, CRM never turns on. This permits CNB to charge to the point where QS is constantly off. The higher voltage at the base of QS is fed back to the base of QR through RNK to raise the voltage required across CNA to turn off QP. This feedback prevents rapid fluctuation of the output when the spindle is near the required speed. With QS constantly off, QU is off and QV is on. Current flowing through QV activates the speed relay connected to B, and signals the controller that the unit is up to speed.

Or - QEA

The QEA circuit (Figure 7-25) detects any decrease in voltage supply greater than 15%. A fault condition will occur if:

1. -20 supply decreases below -17.0v
2. +40v supply decreases below +34.0v
3. +20v supply decreases below +17.0v
4. +6v supply decreases below +5.1v

If all positive supplies are normal, QQ, QR and QS are off. Their emitters are held at +5.8v by Zener diode CRNE and the value of RNW (determined by testing to give a precise collector voltage). Current is pulled through QT, causing a voltage drop across resistor RPA. This voltage drop turns QV on. Transistor QX turns off. If any of the voltage supplies drop below 15% of their operating values, the respective transistor turns on. Transistor QT will then be off. Transistor QV turns off. Transistor QX turns on, driving the output to ground.

The negative voltage segment of the circuit is similar to the positive section. A decrease in the -20v supply below 15% will turn QN on. Transistor QP turns off, causing QU to turn off. Transistor QW turns on causing a voltage drop across RNM which turns QY on. The output drops to ground.

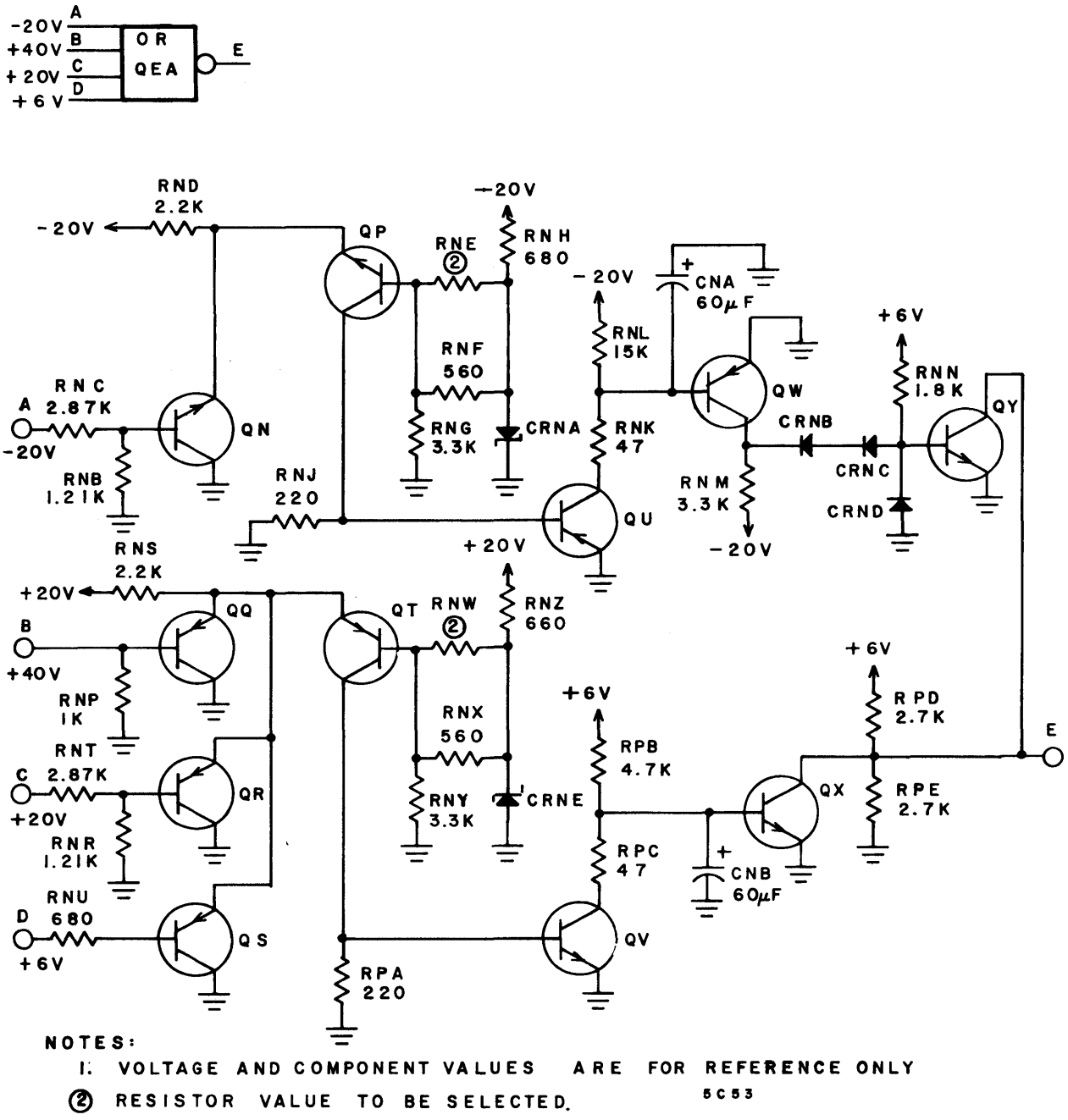

Figure 7-25. Or - QEA

Quantizing Detector - QFA

The QFA circuit (Figure 7-26) detects a fault in the write and erase drivers or in the head select circuit. If there is an open in the head, either of the drivers is non-functional, or more than one head is selected, a fault signal occurs.

Inputs A and B are connected to the write and erase driver circuits and enter across a voltage bridge to the base of QP. Normally, both inputs are approximately 32v. All diodes are forward biased. Voltage on the base of QP is 32v and the emitter is at 31.4v due to a reverse bias 0.6v base-emitter voltage across QP. Transistor QP is off. All input current goes to ground through RND.

If input A is higher than input B by 1.4v, CRNB and CRNC are forward biased. CRNA and CRND are reverse biased. The voltage on the base of QP becomes that of input B. The emitter of QP is 0.7v higher than the base due to a 0.7v drop across CRNB. Transistor QP is on.

If input B is higher than input A by 1.4v, CRNA and CRND are forward biased. CRNB and CRNC are reverse biased. The base of QP is at the voltage of input A. The emitter of QP is 0.7v higher than the base. Transistor QP is on.

Input C is connected to the head select circuits. If more than one head is selected, the drop in effective resistance (due to external resistors in parallel) results in an increase in current through RNA. This increases the voltage drop across RNA, turning QN on.

If either QN or QP is on, QR turns on. Output D goes to ground to signify a fault condition.

Quantizing Detector - QFB

The QFB circuit (Figure 7-27) is used to amplify and shape an incoming wave. The input at A and B is a differential sine wave. The output at C and D is an amplified and clipped version of the input wave.

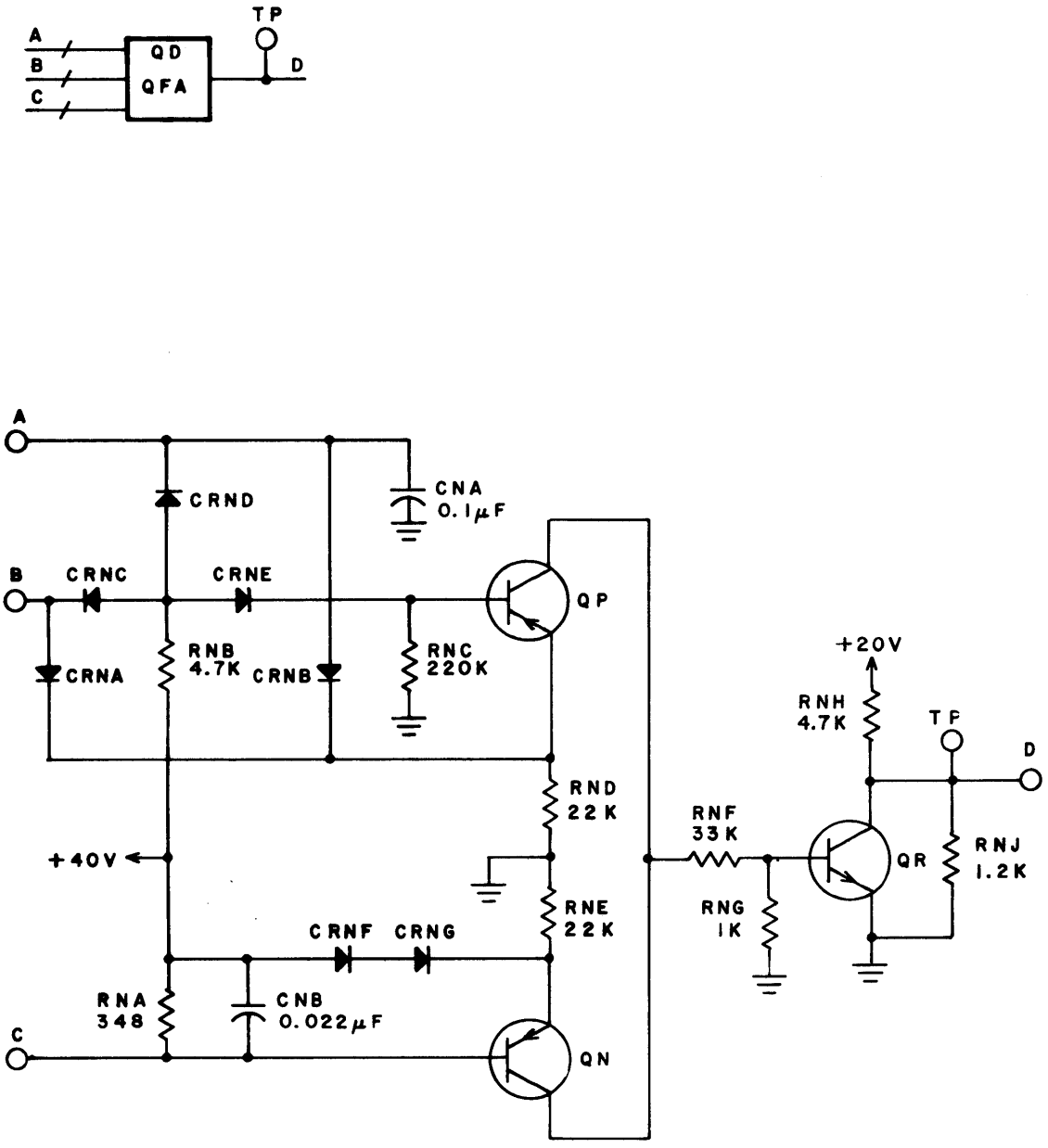

Figure 7-26. Quantizing Detector - QFA

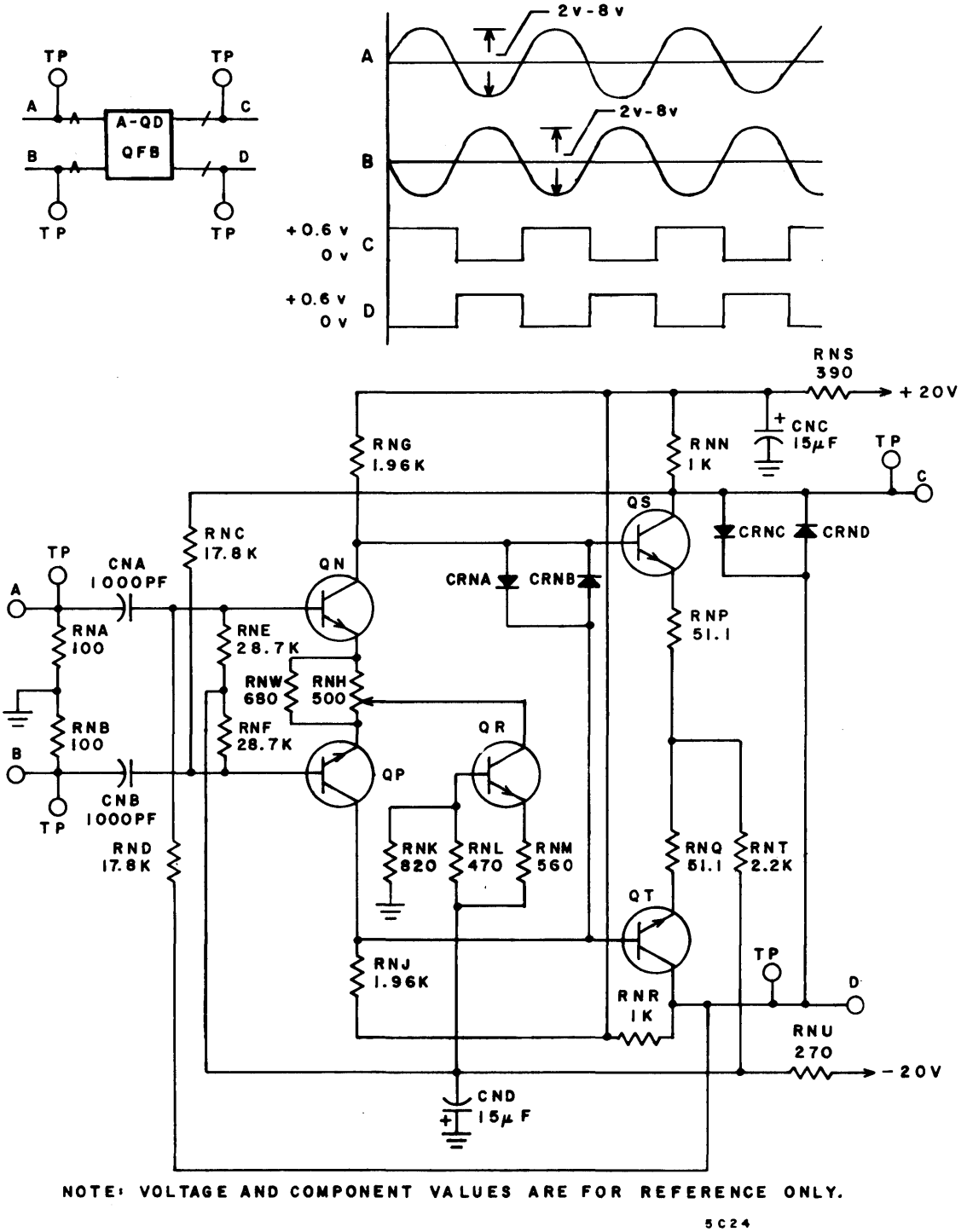

Figure 7-27. Quantizing Detector - QFB

Transistor QR is the current source for the differential amplifier stage consisting of QN and QP. Capacitors CNA and CNB filter out dc and low frequency noise and pass the input wave which alternately turns on QN and QP. The output at the collectors of QN and QP are clipped by diodes CRNA and CRNB to approximate a square wave. This square wave is fed to the bases of QS and QT for another stage of differential amplification. The square wave output at the collectors of QS and QT is again clipped by diodes CRNC and CRND. The output at C and D is a clipped, square wave between 0v and +0.6v corresponding to the rise and fall of the sine wave at inputs A and B, respectively.

Quantizing Detector - QFF

The QFF circuit (Figure 7-26) produces a positive pulse output in response to a positive input pulse. The width of the output pulse is independent of the input and is adjustable.

Assume a condition where QN is on. With the collector of QN at ground, QP turns off and CNC begins charging (through RNL to ground via QN and QS) toward Vcc volts. The duration of the charging period is controlled by the time constant RNL x CNC. When the base of QQ reaches 0.7 volts, QQ turns on, QS turns off, and the output goes to ground.

With the circuit in the condition of the preceding paragraph, a no-signal state will have the following effect: Ground level at base of QN turns it off. Since QS is also off, current is drawn through the base of QP and turns it on. Current now flows through QP charging CNC in the opposite direction (from preceding paragraph) to about -5.3 volts (Zener diodes CRNC voltage minus the 0.7 base-emitter voltage of QQ). As the current increases and decreases (during charging period) through QP, the remaining current still flows through RNL thereby keeping QQ on.

When a clock or data pulse is applied to the base of QN it turns on. With the QN collector at ground, QP turns off and a -5.3v base-emitter voltage appears across QQ, turning it off. Capacitor CNC again charges through the variable resistor RNL until QQ turns on.

When the circuit has been adjusted so that the width of the output pulse exceeds that of the input pulse, QS stays on (after the input drops) to hold the base of QP at ground.

Capacitor CND is a filter capacitor to provide a constant voltage across CRNC.

Line Receiver - RAA

The line receiver circuit, RAA, (Figure 7-29) provides a "1" output at C and D when the difference in input voltage (A minus B) is greater than +0.6v. Under any other input conditions, the output will be a "0".

Diode CRNA is used to maintain the threshold level at +0.6v. Without CRNA the threshold would be about +0.1v. That is, if input B were just 0.1v less positive than input A, the circuit would switch to an output of "1".

Resistor RNE supplies the emitters of QN and QP with a constant current of about 4.25 ma. If the current in one transistor increases, the current in the other transistor must decrease by an equal amount. If input B is more positive than input A (A minus B is negative), QP will be turned on and QN will be turned off. If the difference "A minus B" is only slightly negative, QP will conduct more than QN, but both will be on.

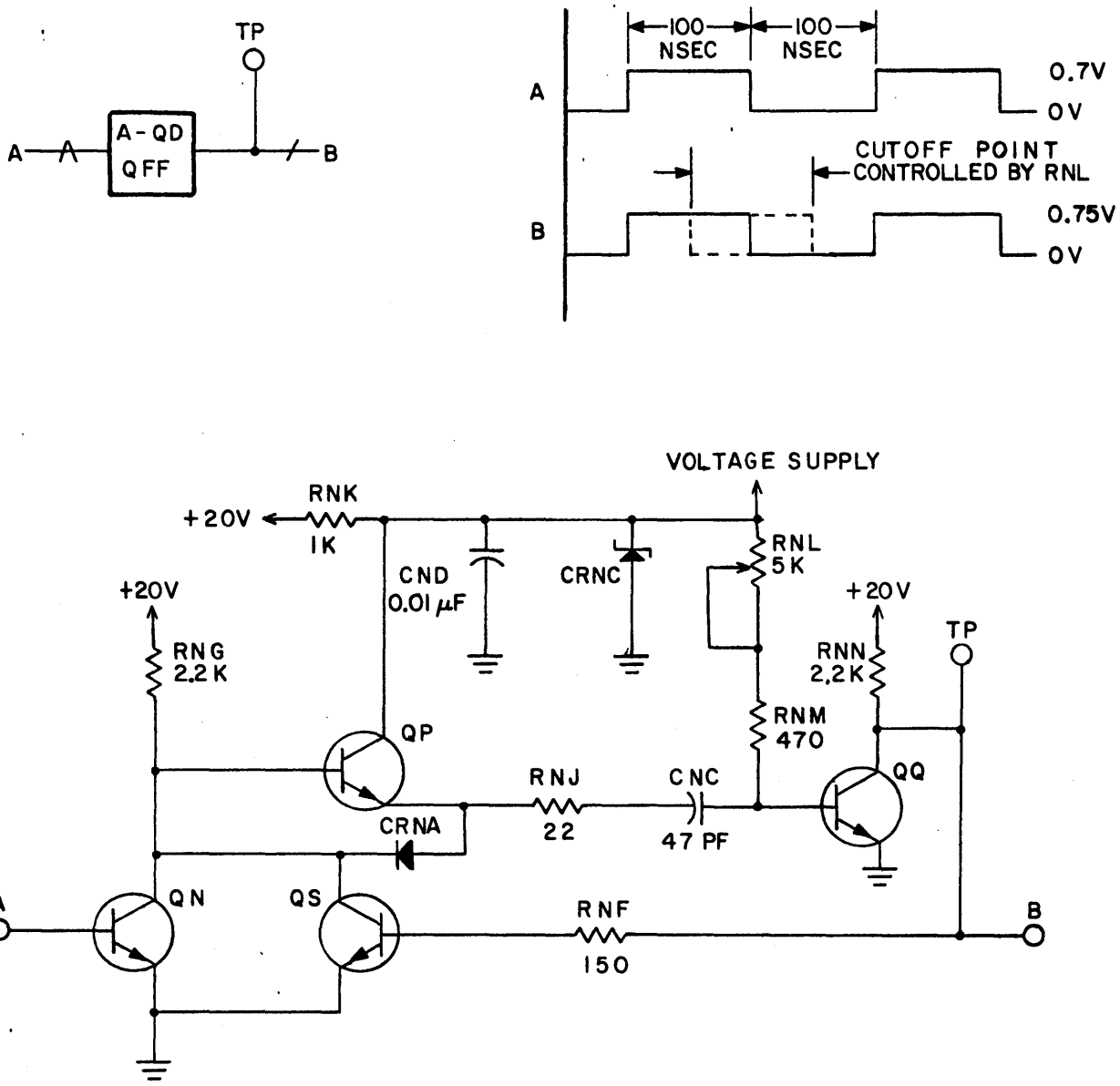

Figure 7-28. Quantizing Detector - QFF

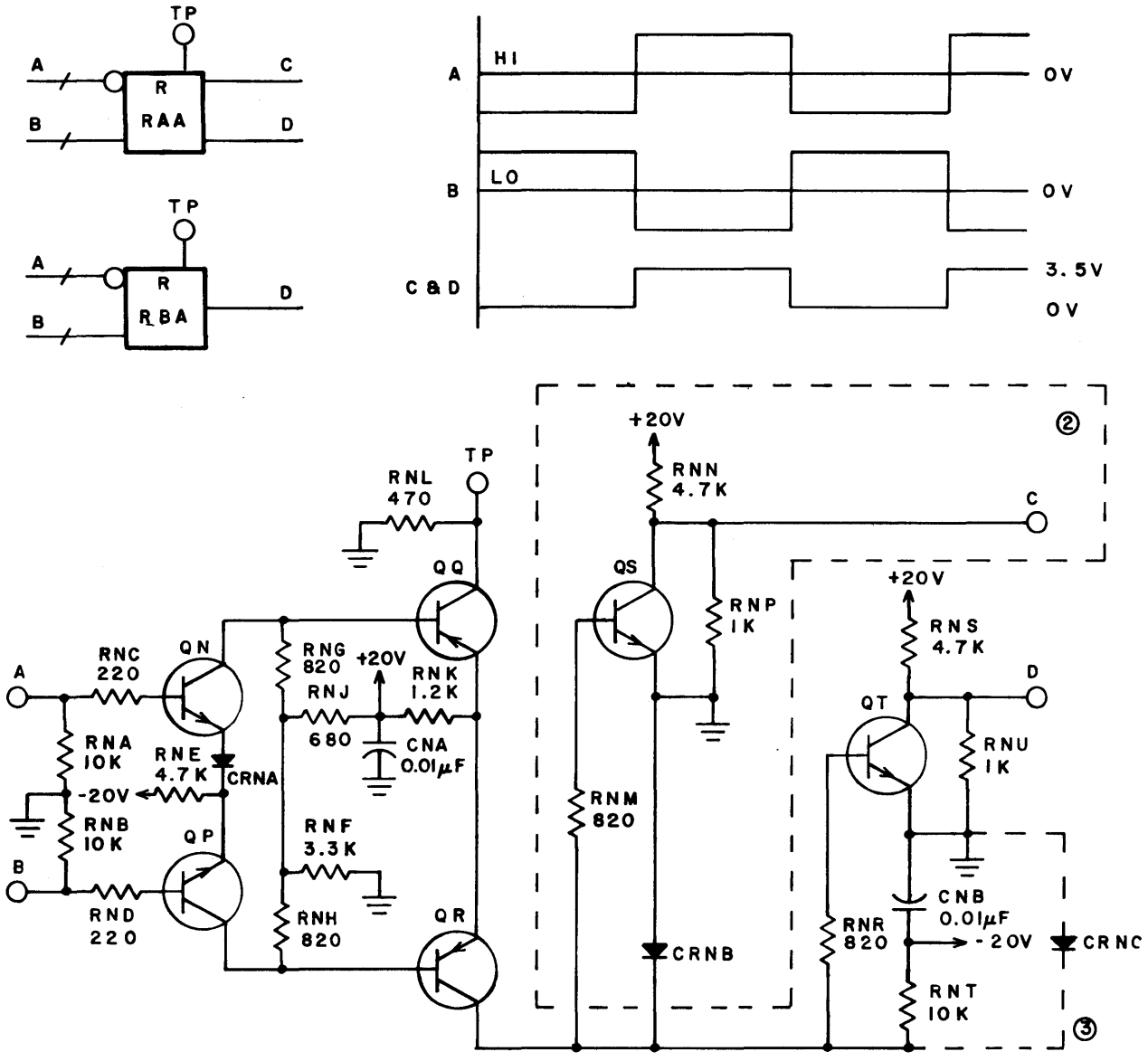

NOTES:

1. VOLTAGE AND COMPONENT VALUES ARE FOR REFERENCE ONLY.
2. PORTION WITHIN DOTTED LINE IS USED FOR RAA ONLY.
3. CRNC USED ON RBA ONLY.

5C10

Figure 7-29. Line Receiver - RAA

The base of QR, therefore, becomes more negative than the base of QQ. Transistor QR turns on, driving its collector and the bases of QS and QT positive. Transistors QS and QT turn on, conducting current from the +20v supply through RNN and RNS, respectively, to ground. The output at C and D is near 0v or a "0".

If input A is at least +0.6v more positive than input B (A minus B is greater than or equal to +0.6v), QN turns on and QP turns off. The base of QQ is then more negative than the base of QR. Transistor QQ turns on conducting current from the +20v supply, through RNK and RNL to ground. Transistors QS and QT are turned off as there is no current to their bases. Current is then allowed to flow from the +20v supply, through the load resistors to outputs C and D. The value of the output voltage is tempered by the resistors RNP and RNU to ground, and is held at a "1" level. The output is a "1".

Line Receiver - RBA

The operation of the RBA circuit (Figure 7-29) is identical to the RAA circuit, except that output C and its related circuitry are omitted. Output D remains intact (with the addition of diode CRNC) and functions the same as output D in the RAA circuit. For a detailed discussion of the RBA circuit, refer to the discussion of the RAA circuit.

Switch Receiver - RDA

Switch Receiver RDA (Figure 7-30) produces a "1" (+3v) output at C when the grounded switch connected to input A is open. When the switch is closed a "0" (0v) is felt at output C.

A switch to ground is connected to input A. When this switch is open, capacitor CNA approaches +6v and QN is shut off. Transistor QP is, therefore, on and conducts current to the base of QQ through resistor RNF. Transistor QQ turns on, driving the base of QR to ground. Transistor QR is off, which allows current to flow from the +6v supply through RNK to output C. The output is a positive voltage, or a "1".

When the switch is closed, the voltage across CNA rapidly increases through RNA and the switch to ground because of the short time constant of RNA and CNA. Any contact bounce on the switch will increase the discharge time. As the voltage across CNA decreases, QN begins to turn on. As QN conducts current to the base of QP, the forward bias on QP is decreased and QP begins to turn off. As QR turns off, the

current through RND decreases due to the higher lead resistance (RNE) of QN compared with QP (RNF). The current drop through RND causes a decrease in the voltage drop across RND. The bias on QN is, therefore, increased. The cycle goes rapidly to completion. Transistor QP is shut off. With QP off, the base of QQ is near ground, causing QQ to shut off. This allows the +6v supply to flow through RNH to the base of QR. Transistor QR, therefore, conducts current away from output C and the output is near ground or "0".

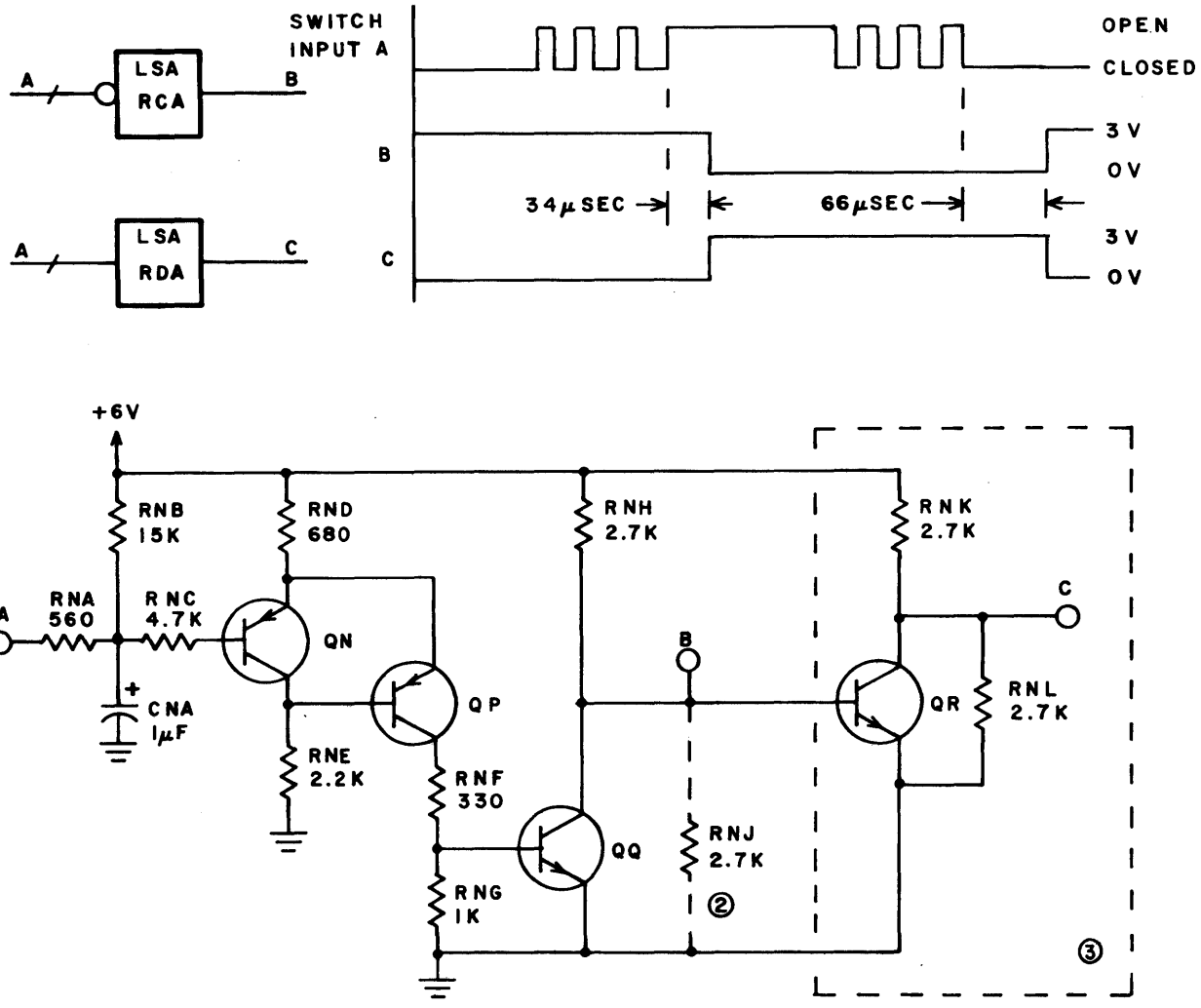

NOTES:

1. VOLTAGE AND COMPONENT VALUES ARE FOR REFERENCE ONLY.
2. DOTTED CONNECTION AND RESISTOR RNJ ARE FOR RCA ONLY.
3. CIRCUIT WITHIN BROKEN LINE BOX IS ADDED FOR RDA ONLY.

5C11

Figure 7-30. Switch Receiver - RDA, RCA

When the switch is opened again, CNA charges slowly to +6v due to the long time constant of RNB and CNA. Any contact bounce on the switch will hold CNA well below the switching level of QN until the bouncing ceases. As the voltage across CNA increases, QN begins to turn off. Transistor QP begins to conduct current away from the emitter of QN. Transistor QP turns on rapidly because of this positive feedback. The output then returns to "1".

Switch Receiver - RCA

The operation of the RCA circuit is similar to the RDA circuit, except that transistor QR is omitted and the output is taken directly from the collector of QQ at B (Figure 7-30). The output is, therefore, opposite from the output of the RDA circuit under the same switch condition. When the switch is open, the output at B is a "0". When the switch is closed, the output at B is a "1". For a detailed discussion of this circuit refer to the RDA circuit description.

Line Receiver - RFA

The RFA circuit (Figure 7-31) provides a non-standard "0" output at C when input A is at least 0.6v more negative than input B. Diode CRNA holds the threshold at 0.6v. Under all other input conditions the output will be a non-standard "1".

If the differential input (A-B) is greater than 0.6v, transistor QP turns on and QN turns off. This drives the base of transistor QR more positive than the base of QQ. Transistor QR conducts current from the -20v supply, through RNK to ground. The output at C is near 0v.

If the differential input (A-B) is less than 0.6v, QN turns on and QP turns off. The base of QQ goes more positive than the base of QR. Transistor QQ conducts and a negative voltage is felt at output C.

Since a "1" is defined in MDD logic as the most positive voltage, the 0v output in the first case is interpreted as a non-standard level "1". The negative voltage output in the second case is, therefore, a non-standard level "0".

The receiver is self-terminated with 56 ohms to ground on each line.

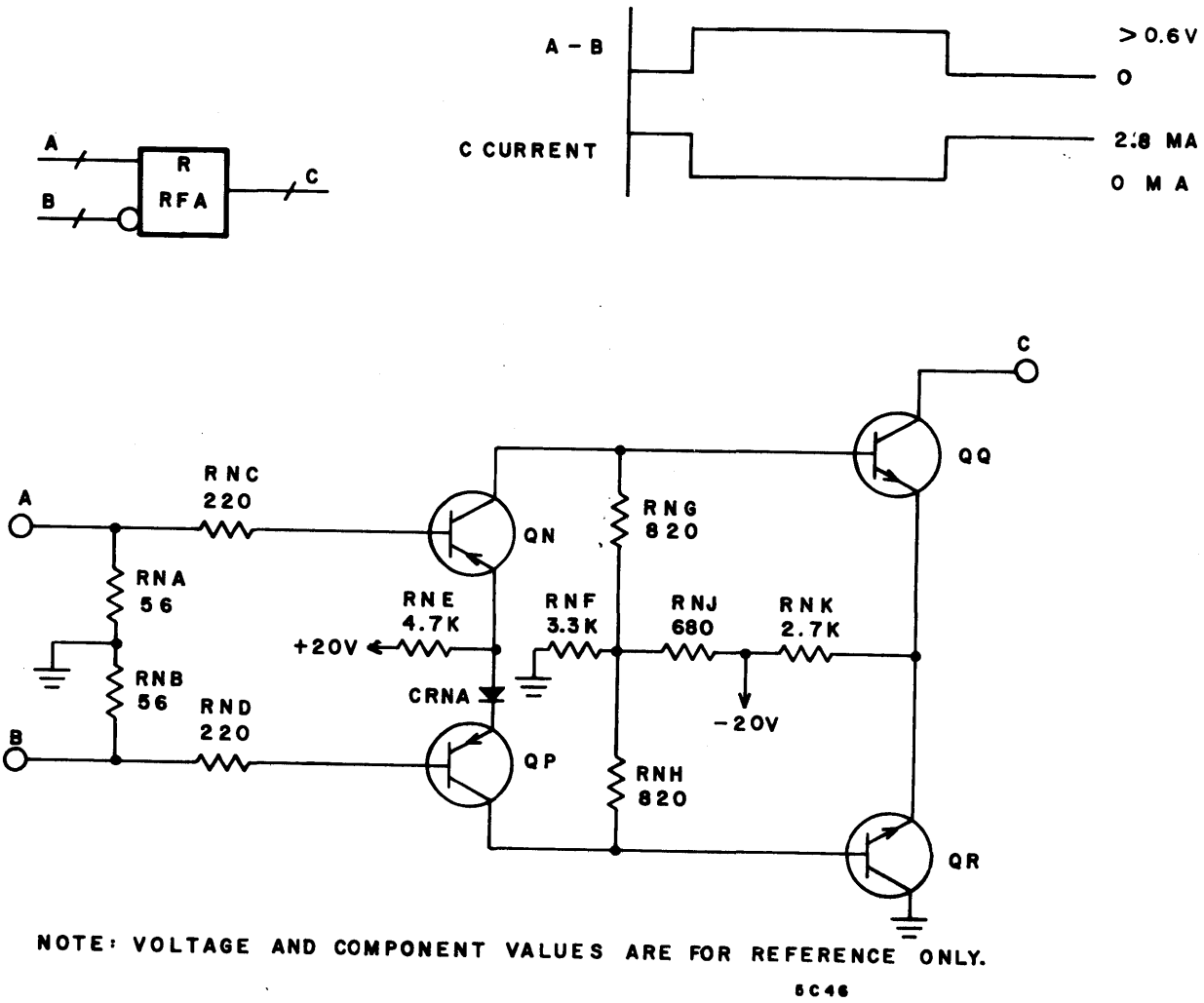

Figure 7-31. Line Receiver - RFA

Delay - UA-, UBA

The capacitive delay circuit (Figure 7-32) delays a "1" input at A for a specified period of time before providing a "1" output at B. The delay time for a "0" pulse is negligible. The delay circuit consists of a capacitor connected to ground.

Assume that a "0" (ground) enters at A. If the capacitor is discharged, it remains discharged. The output is an immediate "0". If the capacitor is charged when the "0" signal enters, it discharges almost instantaneously. The "0" appears at output B with no noticeable delay.

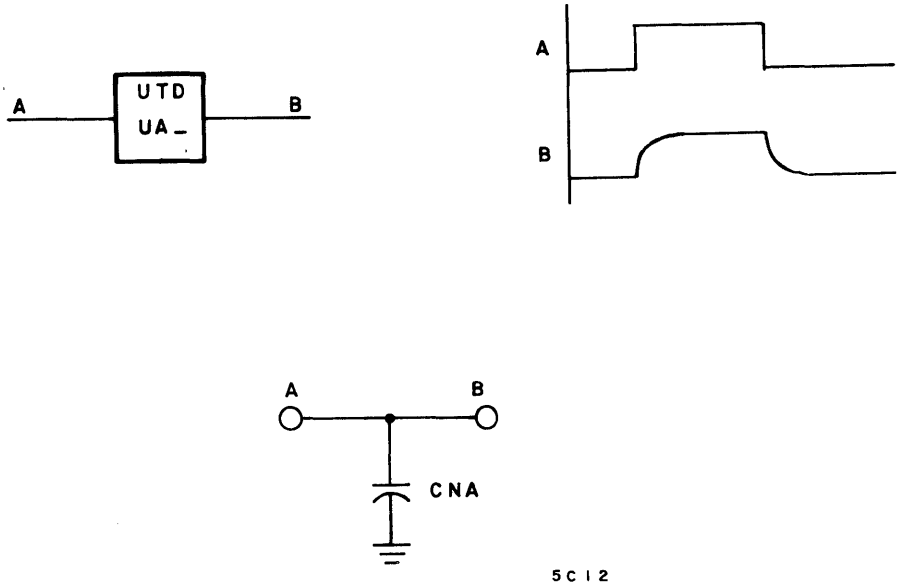

Figure 7-32. Delay - UA-, UBA

If a "1" (+3.0v) enters at A, and the capacitor is discharged, the capacitor must first charge to a minimum "1" voltage (typically +0.7v) before the "1" appears at output B. The time necessary to charge the capacitor to this minimum voltage is the delay time of the circuit. The charge time is dependent on the value of the capacitor, the value of an external resistor between the source voltage and the delay circuit, and the minimum voltage required to produce a "1" response.

Delay times for capacitive delays used in the MDD unit are as follows:

Delay	Time
UAA	0.3 μsec
UAB	0.4 μsec
UAC	0.2 μsec
UAD	1 μsec
UAE	500 μsec
UAF	2 μsec
UAG	0.1 μsec
UAL	10 μsec
UAM	8 μsec
UAN	5 μsec
UBA	15 μsec
UAP	60 msec

Delay Circuit - UCA

The UCA circuit (Figure 7-33) provides a delayed "0" output signal at B a set time after a "0" is felt at input A. A "1" signal is not delayed.

The operation of the UCA circuit is similar to the UDA circuit except the final transistor QU (Figure 7-33) is omitted for the UCA circuit. This allows a "0" output when transistor QT (Figure 7-33) conducts, and a "1" output when QT is turned off. For a detailed discussion of this circuit, refer to the UDA circuit.

The time delay is still dependent upon the values of RNC and CNA. The delay for a UCA circuit will be slightly less than the delay for an identical UDA circuit due to the extra time taken for transistor QU to turn on in the UDA circuit.

Delay Circuit - UCB

The UCB circuit is identical in operation to the UCA circuit (Figure 7-33). The values of RNC and CNA are changed to produce a different time delay.

Delay Circuit - UCC

The UCC circuit is identical in operation to the UCA circuit (Figure 7-33). The values of CNA and several resistors are changed. In addition, a 10-ohm resistor is added in series with the collector of QN to increase the discharge time of CNA when QN is turned on.

Delay Circuit - UCD

The UCD circuit is identical in operation to the UCA circuit (Figure 7-33). The values of CNA and several resistors are changed. In addition, resistors RNA and RNB and their connections are omitted, CRNA and CRNB are replaced by a 1K resistor, and a 47-ohm resistor is added in series with the collector of QN to increase the discharge time of CNA.

Delay Circuit - UCE

The UCE circuit is identical in operation to the UCA circuit (Figure 7-33). The values of CNA, RNC and RNH are changed. In addition, a 47-ohm resistor is added in series with the collector of QN to increase the discharge time of CNA. The feedback to the base of QR through RNL is omitted. Resistor RNG is replaced by a 3.6v Zener diode to limit the voltage on the base of QR to +3.6v.

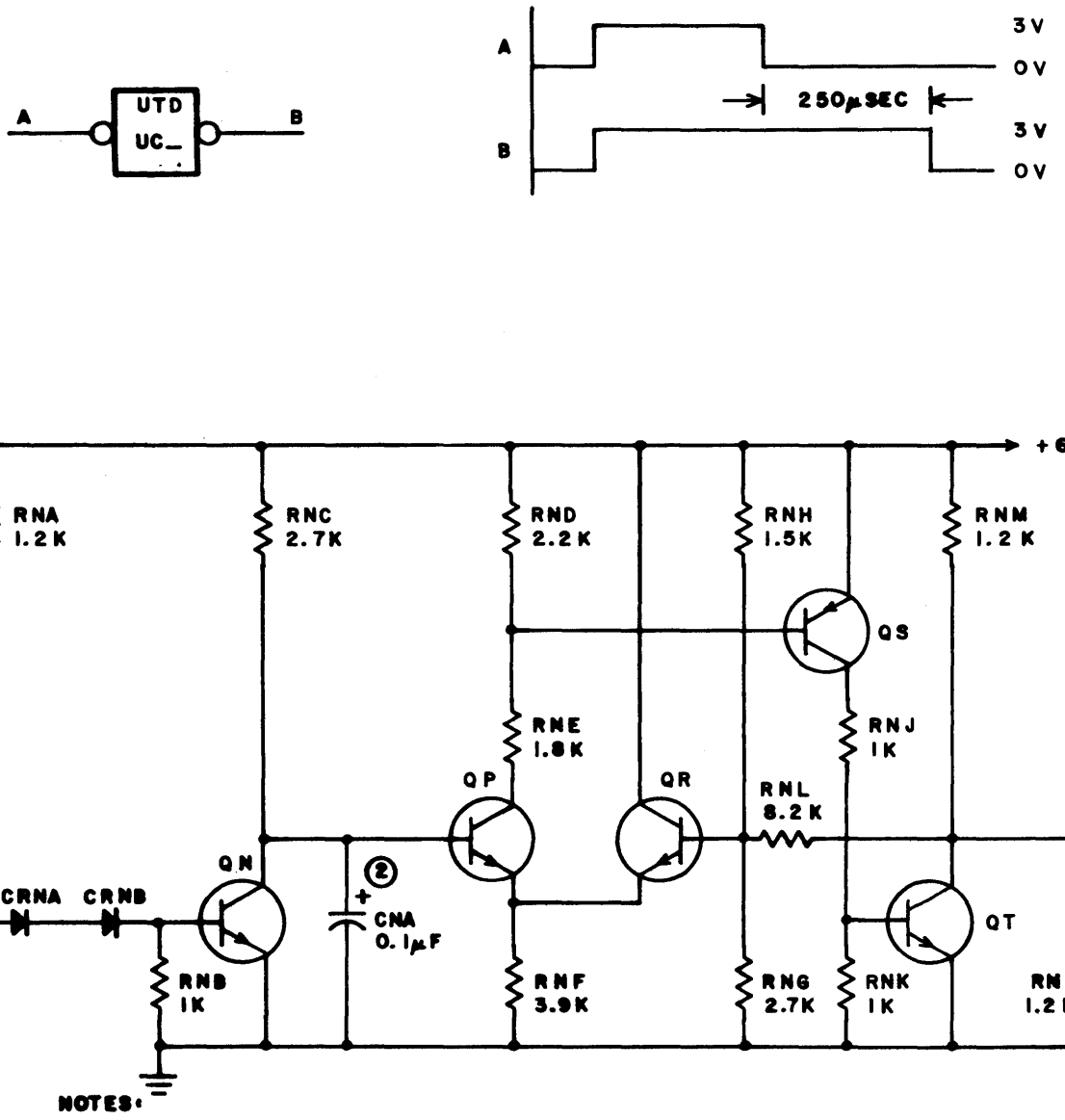

Figure 7-33. Delay Circuit - UCA, UCB, UCC, UCD, UCE

Delay - UDA

The UDA circuit (Figure 7-34) provides a "1" output at B a set length of time after a "0" enters at input A. There is no delay for a "1" input signal. The output is an immediate "0".

When a "1" appears at input A, QN conducts current from the +6v supply, through RNC to ground. The base of QP, therefore, approaches ground. The base of QR is held at approximately +3.8v by the voltage dividing action of RNG and RNJ. The emitters of QP and QR are, therefore, held at approximately +3 volts. QP is off. The base and emitter of QS remain at +6 volts, so QS is off. The base and emitter of QT are both at ground. Transistor QT is off. The collector of QT goes to approximately +2.4v due to the voltage dividing network formed by RNM, RNN and the base-emitter voltage drop across QU. Transistor QU is turned on and the output is held near ground, or a "0".

When a "0" (ground) appears at input A, QN turns off. This allows capacitor CNA to begin charging from the +6v supply through RNC. When the voltage at the base of QP reaches approximately +3.8v, QP starts to conduct, drawing current away from the base of QS. Transistor QS starts to turn on, forward biasing the base of QT. Transistor QT starts conducting. As the collector of QT approaches ground, the voltage on the base of QR is drawn off through RNH. This decreases the voltage on the emitters of QR and QP and drives QP to saturation. With QP saturated, QS and QT are also driven toward saturation. When QT conducts, the base of QN goes toward ground. Transistor QU is cut off and the output voltage rises to a "1" level.

The time delay is determined by the values of RNC and CNA.

Delay - UDB

The operation of the UDB circuit is identical to that of the UDA except the size of capacitor CNA (Figure 7-34) differs to cause a delay of 115 ±25 ms.

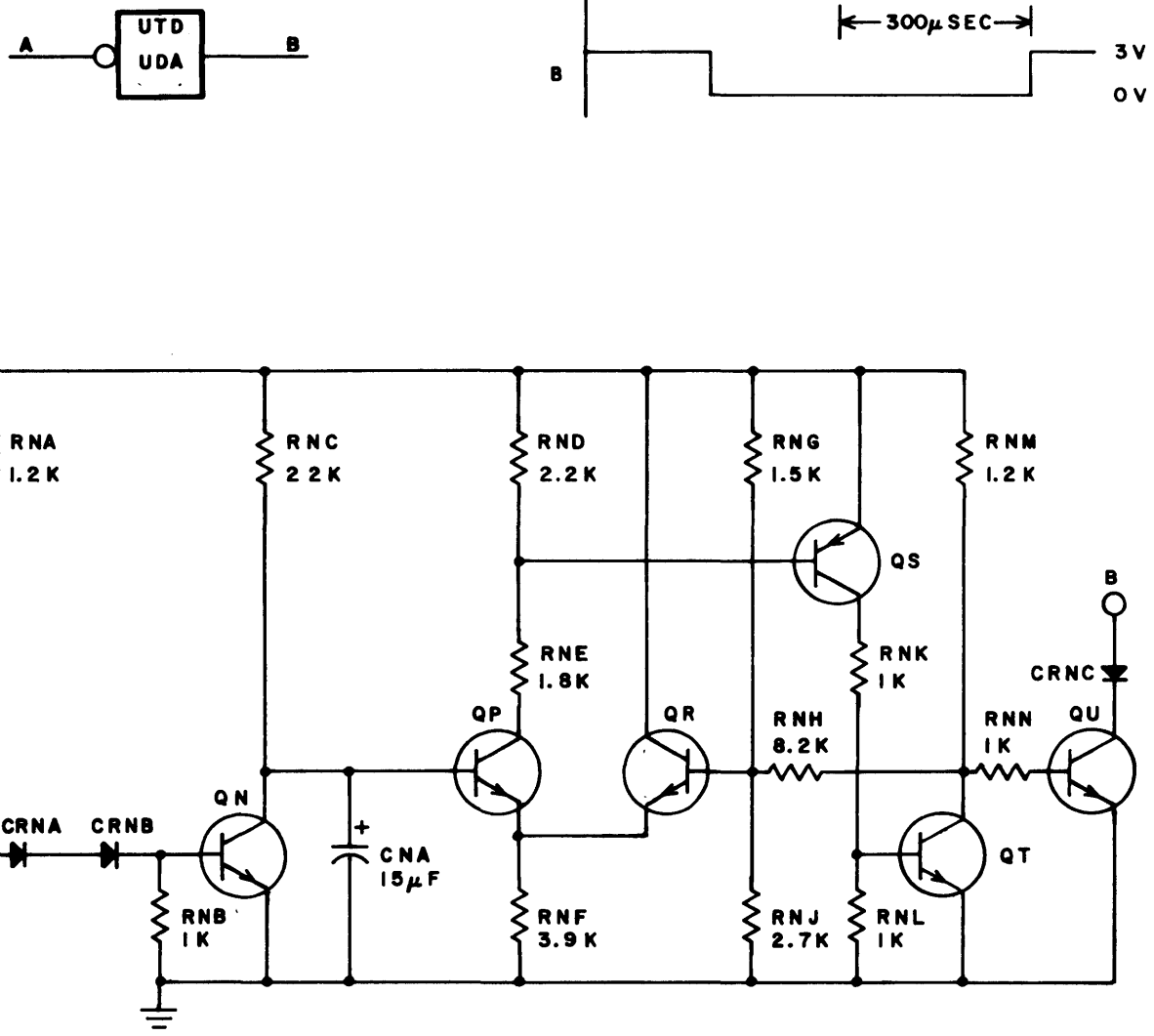

NOTE: VOLTAGE AND COMPONENT VALUES ARE FOR REFERENCE ONLY.

5C7

Figure 7-34. Delay - UDA, UDB

Undirectional Time Delay - UEA

The UEA circuit (Figure 7-35) provides a 0.1-μsec delay between the time that a -3.5v signal appears at A and the time that transistor QP turns off. Output at B is either ground or an open circuit.

When input A is near ground, QN is off. Transistor QP is on. The output is ground.

When input A goes to -3.5v, capacitor CNA begins charging. After 0.1 μsec the base of QN is sufficiently negative to turn QN on. Transistor QP turns off. The output is an open circuit.

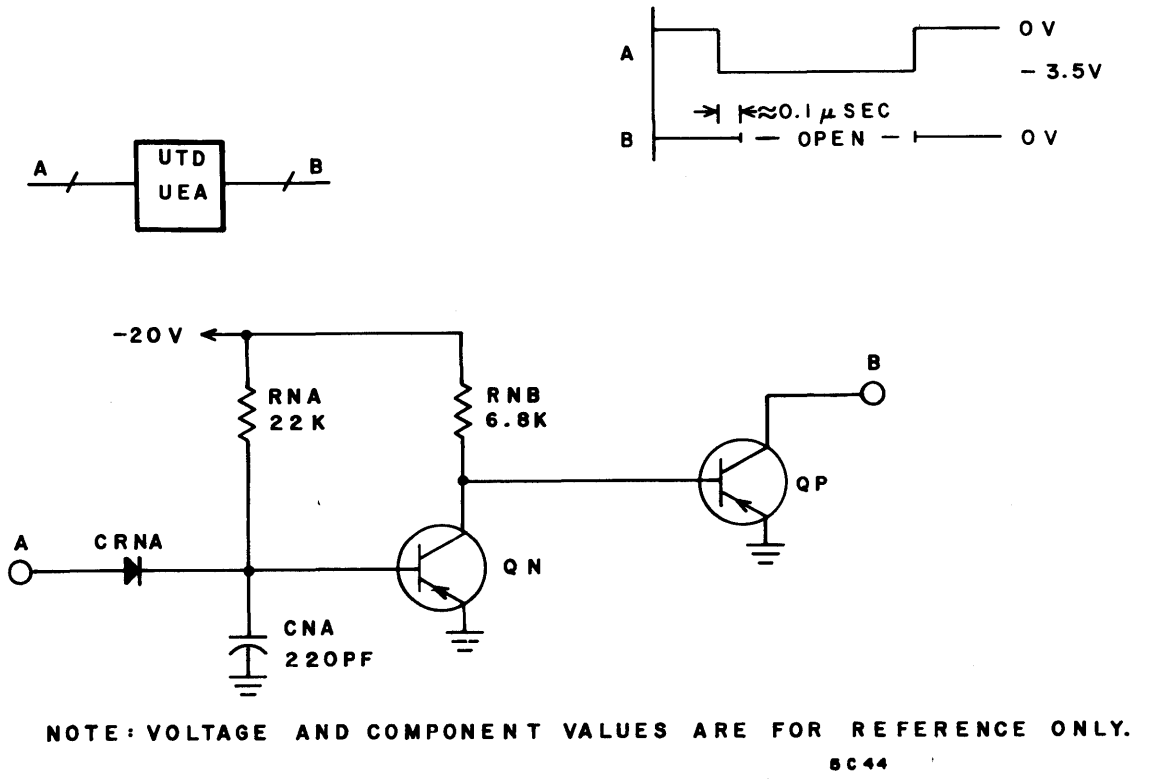

Figure 7-35. Undirectional Time Delay - UEA

And - VAA

The VAA circuit (Figure 7-36) consists of a single NPN transistor. When all inputs connected to A are at a "1" level, the output at B will be a "0". Any "0" appearing at A will result in a "1" output at B.

When the input to A is a "0", A is held at about +0.9v. This input is not sufficient to forward bias diodes CRNA and CRNB or transistor QN. Transistor QN is off. The output at B is a "1".

When the input to A is a "1", A rises to about +2.1v. This voltage forward biases CRNA, CRNB and QN. Transistor QN turns on, conducting current away from B to ground. Output B is left at about +0.9v, or a "0".

Diodes CRNA and CRNB provide noise immunity up to 1.4v. Resistor RNB connected to ground turns off QN when the positive voltage is removed from A.

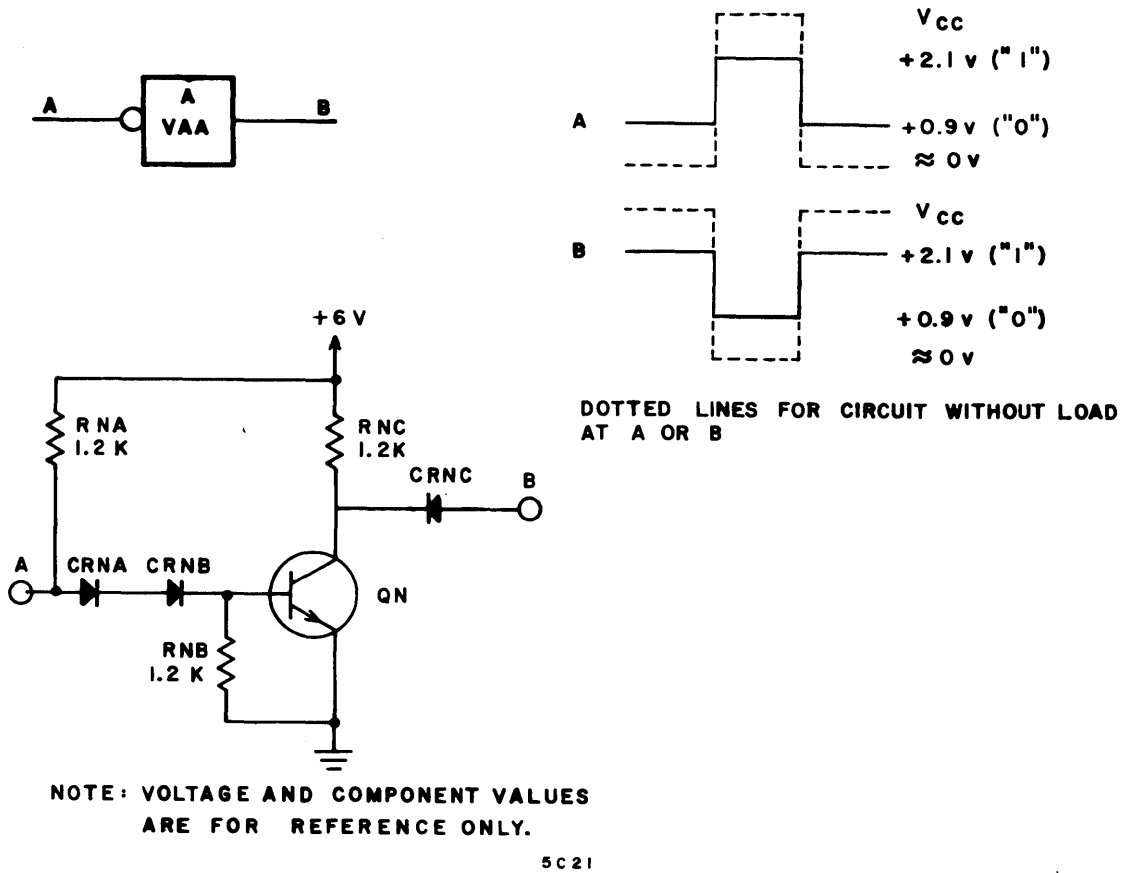

Figure 7-36. And - VAA

And - VAB

The VAB circuit (Figure 7-37) consists of two silicon peripheral logic inverters whose outputs share a common load resistor, RNE. When both inputs A and B are "0" (ground), the output at C will be a "1" (+3v). If either or both of the inputs are a "1", the output at C will be a "0". This is an AND gate for zeroes, or a NAND function.

When both A and B are at ground, QN and QP are off. The output at C is supplied from the +20v source through RNE. The output is a positive voltage, representing a non-logical "1". If input A experiences a positive voltage while B is at ground, QP turns on and conducts current from the +20v supply through RNE to ground. The "0" on B has no effect, as all the supply voltage is tapped to ground. The output at C is ground, or a "0". The situation is similar if A is "0" and B is "1". The output is "0". If both A and B have positive voltage applied to them, QN and QP both conduct. The output is "0".

Capacitors CNA and CNB provide a one's delay on input B and output C, respectively. They also maintain a noise barrier to isolate the circuit from stray pulses on the lines.

And/Or (Single Input) - VAC, VJW

The single input AND/OR or silicon peripheral logic (SPL) inverter (Figure 7-38) provides an inversion from input A to output B: A "1" on A produces a "0" on B, or a "0" on A produces a "1" on B. The inverter's output may be connected to the output of other inverters to form NAND functions or NOR functions.

The SPL inverter is a single NPN silicon transistor connected as a common emitter amplifier. When A is a "0" (between 0v and +0.3v) the transistor is off. This allows current to flow from the +20v supply, through RNB to output B. The output is a "1". When input A is a "1" (between +0.7v and +3.0v) the transistor turns on. The transistor conducts current from the +20v source, through RNB to ground. This leaves output B near ground, or a "0".

Since the base-emitter threshold for a silicon transistor is approximately +0.7v, the circuit ignores up to 0.5v of transient noise.

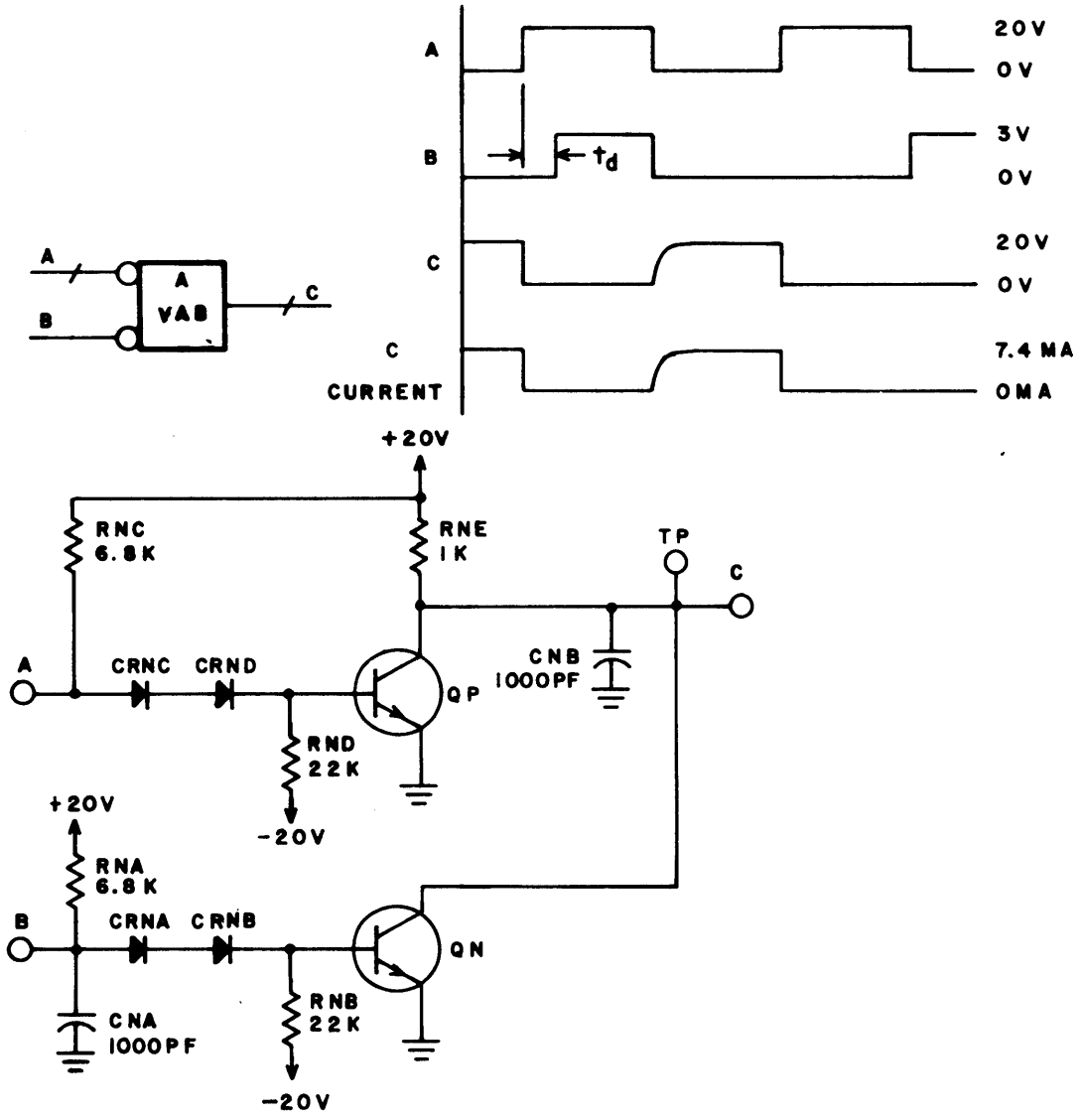

NOTE: VOLTAGE AND COMPONENT VALUES ARE FOR REFERENCE ONLY.

5C14

Figure 7-37. And - VAB

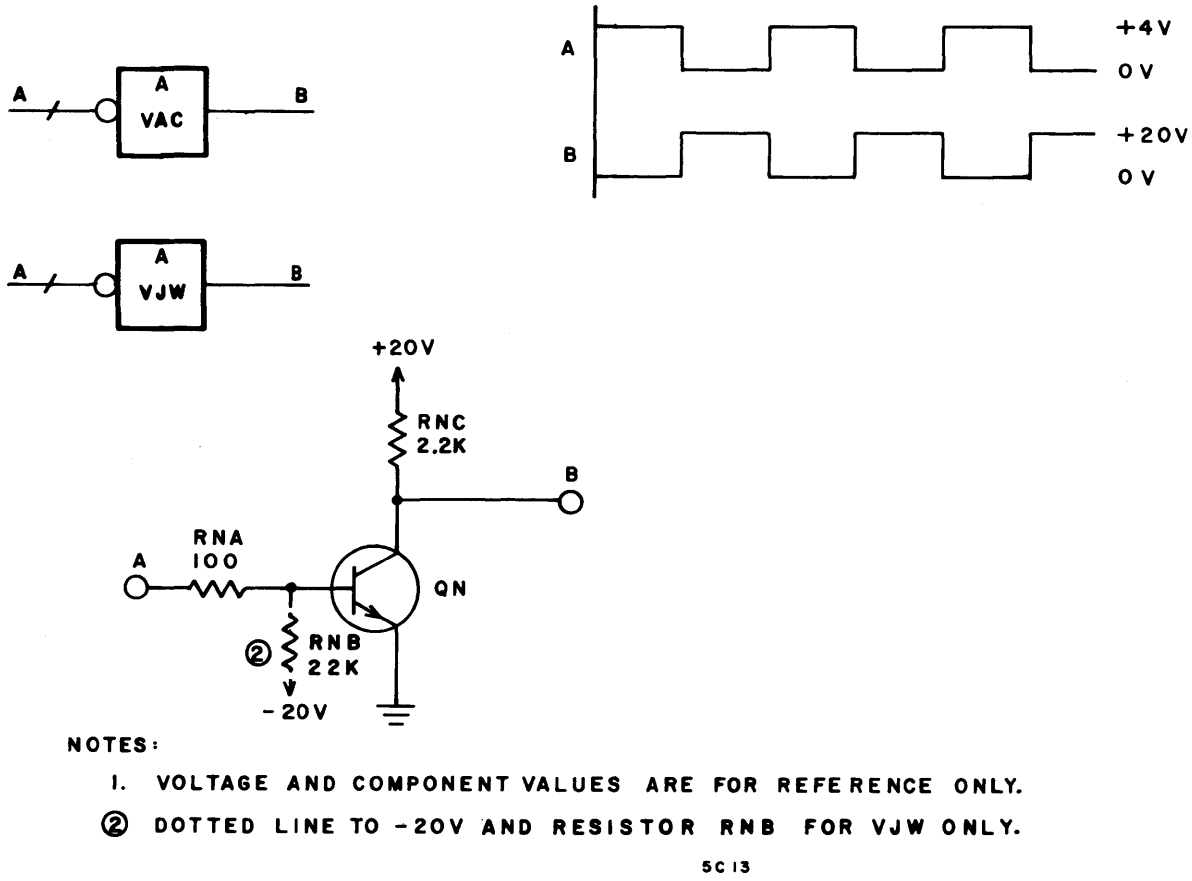

Figure 7-38. And/Or (Single Input) - VAC, VJW

If the circuit drives just one other transistor, the output may be connected directly to the base of the driven transistor. For a fan-out of 2 or more, a base isolation resistor is required for each driven transistor. This resistor ensures that the base drive provided to each of the driven transistors will be nearly independent of differences in base-emitter voltages. For a fan-out of 2 the collector load resistor must be reduced by one-half its value for driving one transistor to provide for the additional voltage drop across the isolation resistors.

Switching time for an inverter with a fan-out of 1 is typically 15 nsec.

Power Driver - VJK

The VJK circuit (Figure 7-39) is similar to the VJS circuit with the addition of capacitor CNB and two outputs. CNB slows the switching time of QN and provides a ramp output. Output B connects to the center tap of the head. Output C contains a 10K resistor and is connected to a voltage supply in a fault detect circuit. If two heads are selected the effective resistance falls to 5K (two 10K resistors in parallel). The increase in current causes a Fault signal. Output D contains a diode that isolates each Write Gate.

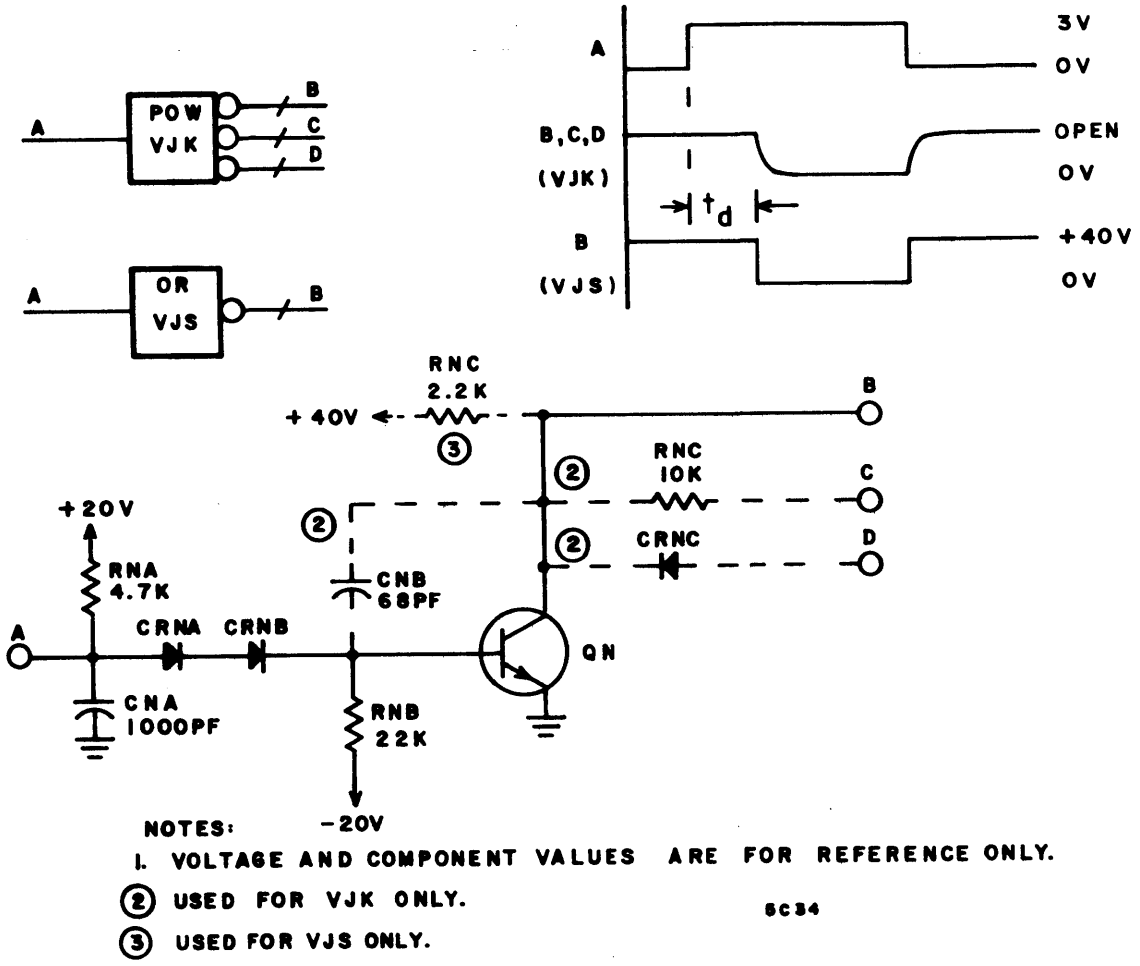

Figure 7-39. Power Driver - VJK

Power Driver - VJL

The VJL circuit (Figure 7-40) is a gate used to bias an analog gate.

If +20v appears at A, QN turns on. The base of QP goes to ground. Transistor QP is off. Capacitor CNA charges through RND to +20v. Output at B is a ramp to +20v.

A +0.2v signal at A turns QN off. When QP turns on, the collector voltage of QN clamps at +0.7v. CNA discharges rapidly through QP. Output B drops to ground.

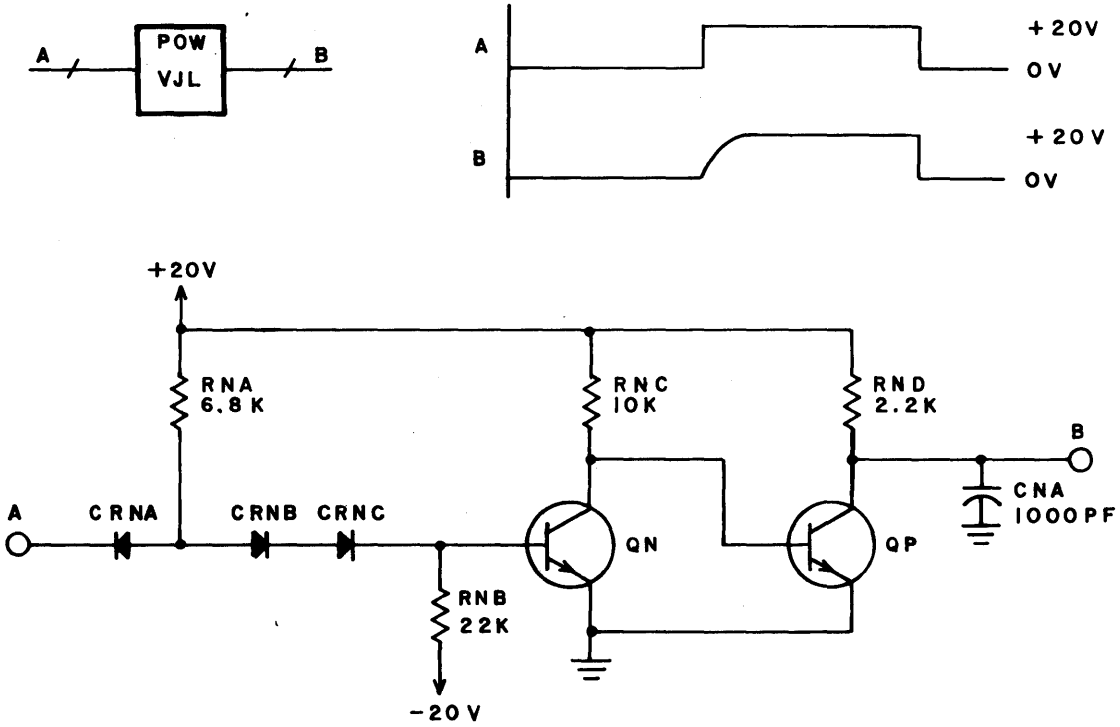

Figure 7-40. Power Driver - VJL

And - VJM

The VJM circuit (Figure 7-41) gates a particular receiver into operation. A "0" input at A results in an "open" enable signal to the receiver. A "1" input at A disables the receiver.

A "0" (0v) input forward biases diode CRNA. The +20v supply current is drawn through RNA and CRNA, leaving the base of QN reverse biased. Transistor QN is off. Output is held at -0.7v by the next stage.

A "1" input turns QN on. The output goes to ground. No receiver signal can pass into the receiver.

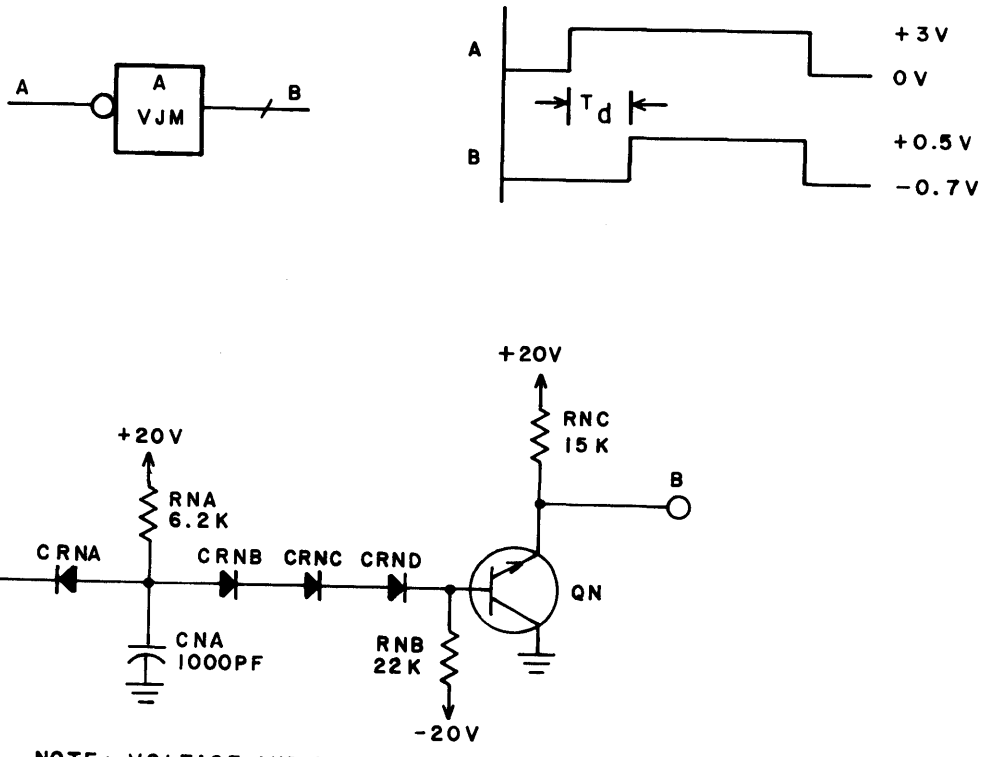

Figure 7-41. And - VJM

Or - VJN

The VJN circuit (Figure 7-42) is a NAND circuit that inverts the input signal. Input A is connected to the output of a receiver and to a gating circuit. If the Write gate is off, the base of QN is grounded. The circuit is disabled.

When the write gate is on, QN turns on and the receiver inputs a "0". Transistor QN turns on further and goes into saturation. Output voltage at B is approximately -0.2v.

When the receiver inputs a "1", QN comes out of saturation. Output at B is approximately -3.5v.

Whenever the write gate is on, QN is on to some degree. Only when the write gate is off is the base of QN at ground and QN off.

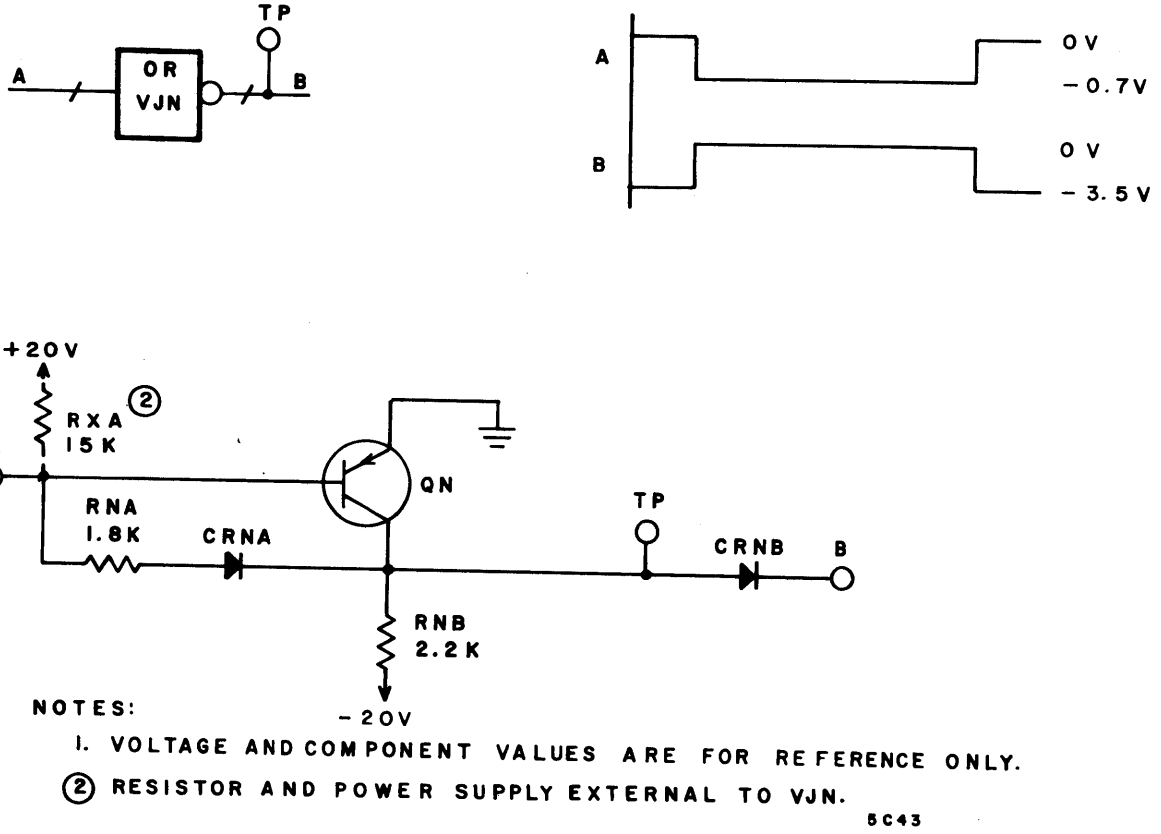

Figure 7-42. Or - VJN

And - VJP

The VJP circuit (Figure 7-43) is normally used as the input circuit to a toggle flip-flop. It ties two receiver outputs to a single-ended output. Capacitor CNA is used to reduce the input impedance for faster switching.

When input A is near ground the base of QN is at approximately +0.9v. Transistor QN is off. Output at B approaches -20v, but is clamped at -3.8v by a Zener diode in the following circuit.

When input A is -3.5v, QN turns on. Output drops to approximately -0.2v.

Input to A is short (100 nsec), negative, data pulses. Output B is also short pulses.

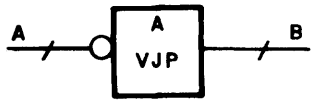

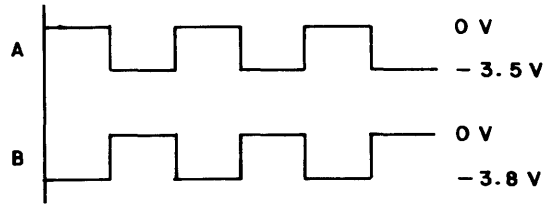

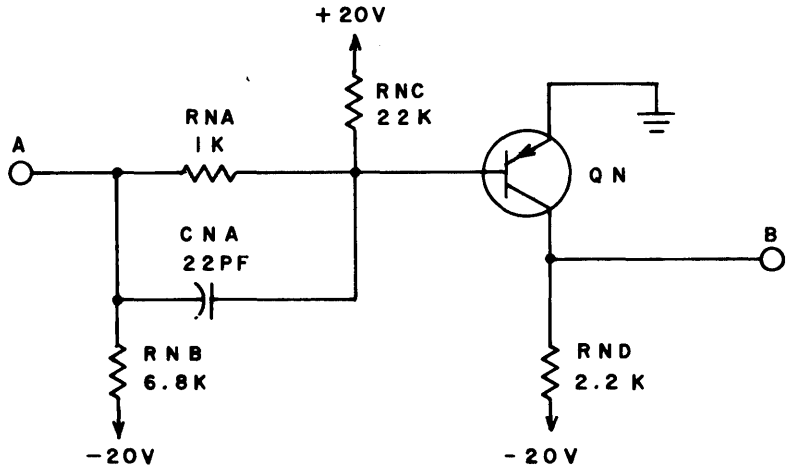

NOTE: VOLTAGE AND COMPONENT VALUES ARE FOR REFERENCE ONLY.

5C42

Figure 7-43. And - VJP

Power Driver - VJR

The VJR circuit (Figure 7-44) is a +40v switch. A "1" on input A produces +40v at output B. A "0" on input A stops current flow.

A "1" input turns QN on. Transistor QN conducts current from the +40v supply, causing a voltage drop across resistor RNB. This voltage drop turns on QP. Output B is at +40v.

A "0" input turns QN off. Since current no longer flows, the emitter and base of QP are at equal voltage. Transistor QP is off. Output B goes to ground.

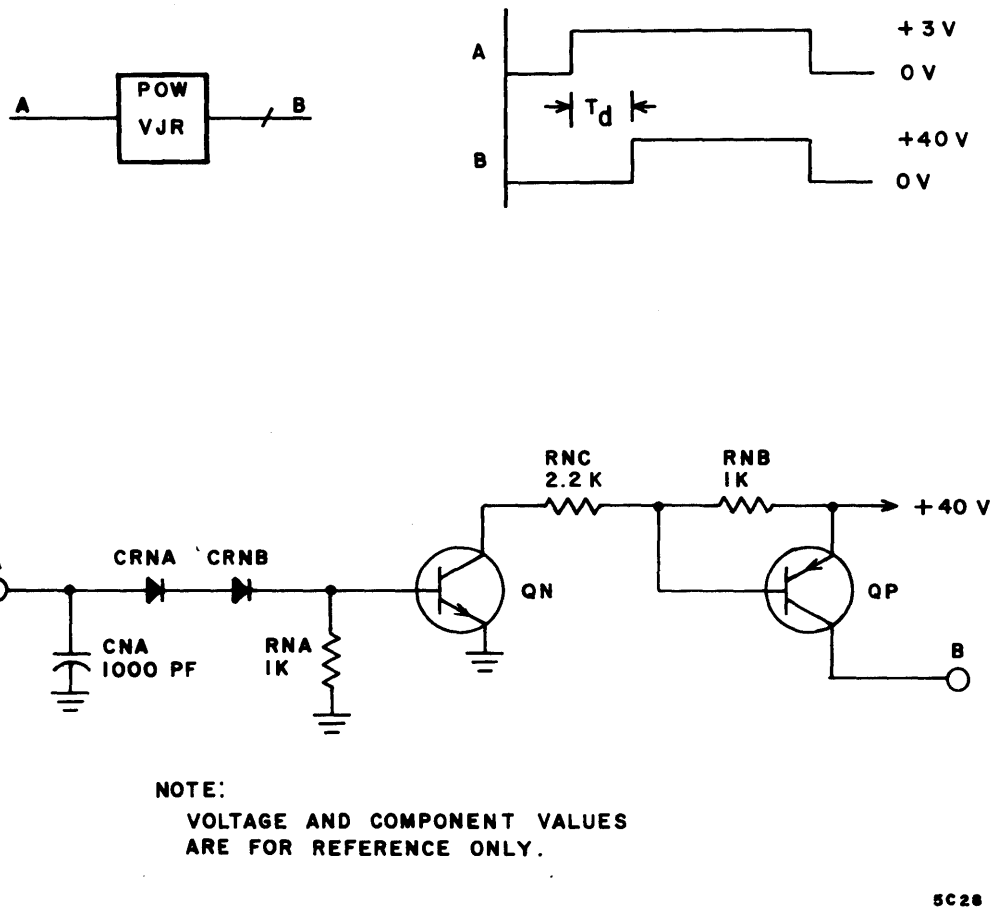

Figure 7-44. Power Driver - VJR

Or - VJS

The VJS circuit (Figure 7-39) is a standard inverter with a capacitor delay at the input. A "1" at input A pulls the output at B to ground. A "0" produces a +40v output.

Or - VJT

The VJT Circuit (Figure 7-45) is a gate to the WBB toggle flip-flop. A "1" input at A produces a ground at B, which keeps the flip-flop off. A "0" input at A produces a -3.5v output at B, which releases the flip-flop and presets it in a given state.

When a "0" is applied to input A, the base of QN goes to ground. Transistor QN is off. The base of QP is clamped at +0.6v by diode CRNC. Transistor QP is off. Output B is -3.5v derived from the voltage dividing network of RNF and RNG.

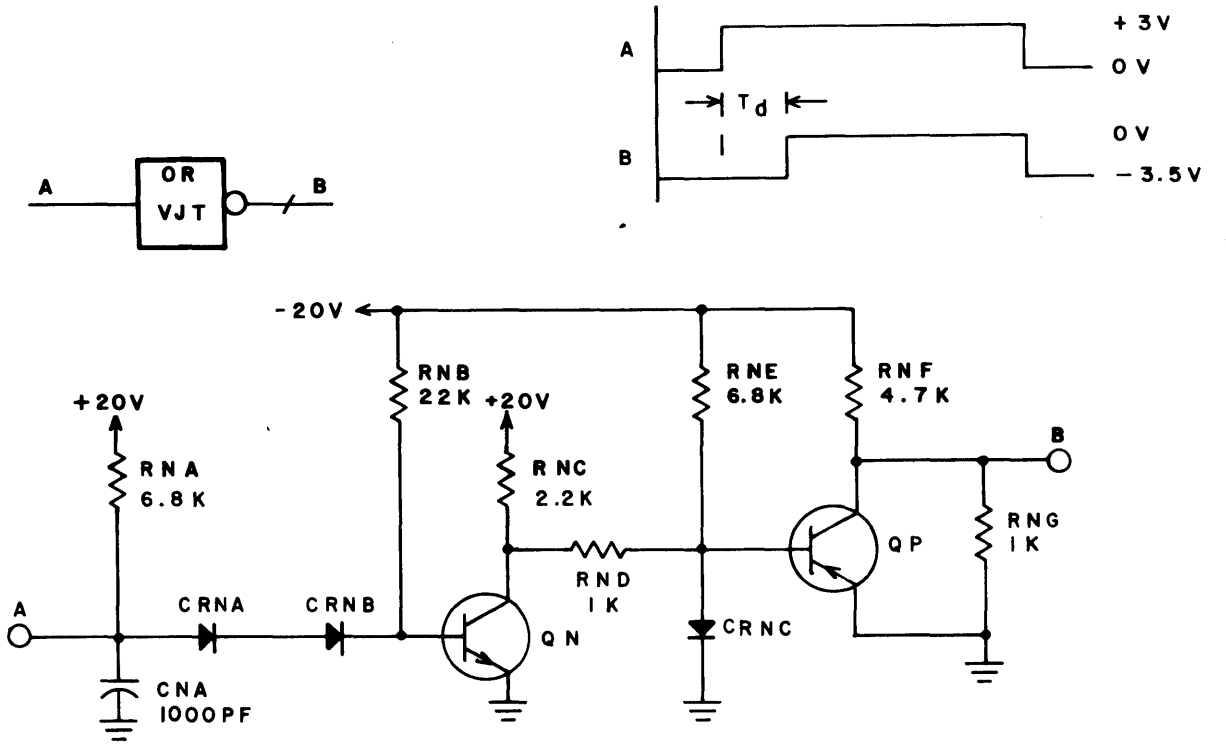

Figure 7-45. Or - VJT

When A goes to a "1", capacitor CNA charges. After a delay, the base of QN is positive enough to turn QN on. The base of QP goes negative through resistor RNE. Transistor QP turns on. The output at B drops to ground.

And - VJU, VJV

The VJU and VJV circuits (Figure 7-46) are functionally identical. They consist of a standard inverter circuit with a capacitive filter input. The capacitor also presents a delay.

A "1" on input A reverse biases diode CRNA. Capacitor CNA charges through RNA until it is clamped at about 3 diode voltages (approximately 2.1v). QN turns on. Output B falls to ground.

If input A is a "0", CNA discharges through CRNA. Transistor QN turns off. Output B rises to a "1" level due to the clamping by a Zener diode.

And/Or - VJW

Refer to circuit description for circuit type VAC.

Flip-Flop - WBB

The WBB circuit (Figure 7-47) is a toggle flip-flop with gate and data inputs.

Input B holds both transistors off by grounding the bases when the circuit is off. When a write operation is to be performed, the base of QP is released while QN is still grounded by input C. This sets an initial condition for the flip-flop: QP is on, QN is off.

After the flip-flop is pre-set it is toggled through input A by a series of negative data pulses. The leading edge of the negative data pulse begins charging capacitor CNB. Diode CRND becomes forward biased. QP is on. Output E is at ground. A voltage of -3.6v across Zener diode CRNK keeps CRNN reverse biased. CRNK and CRNM clamp the output of QN at -3.8v.

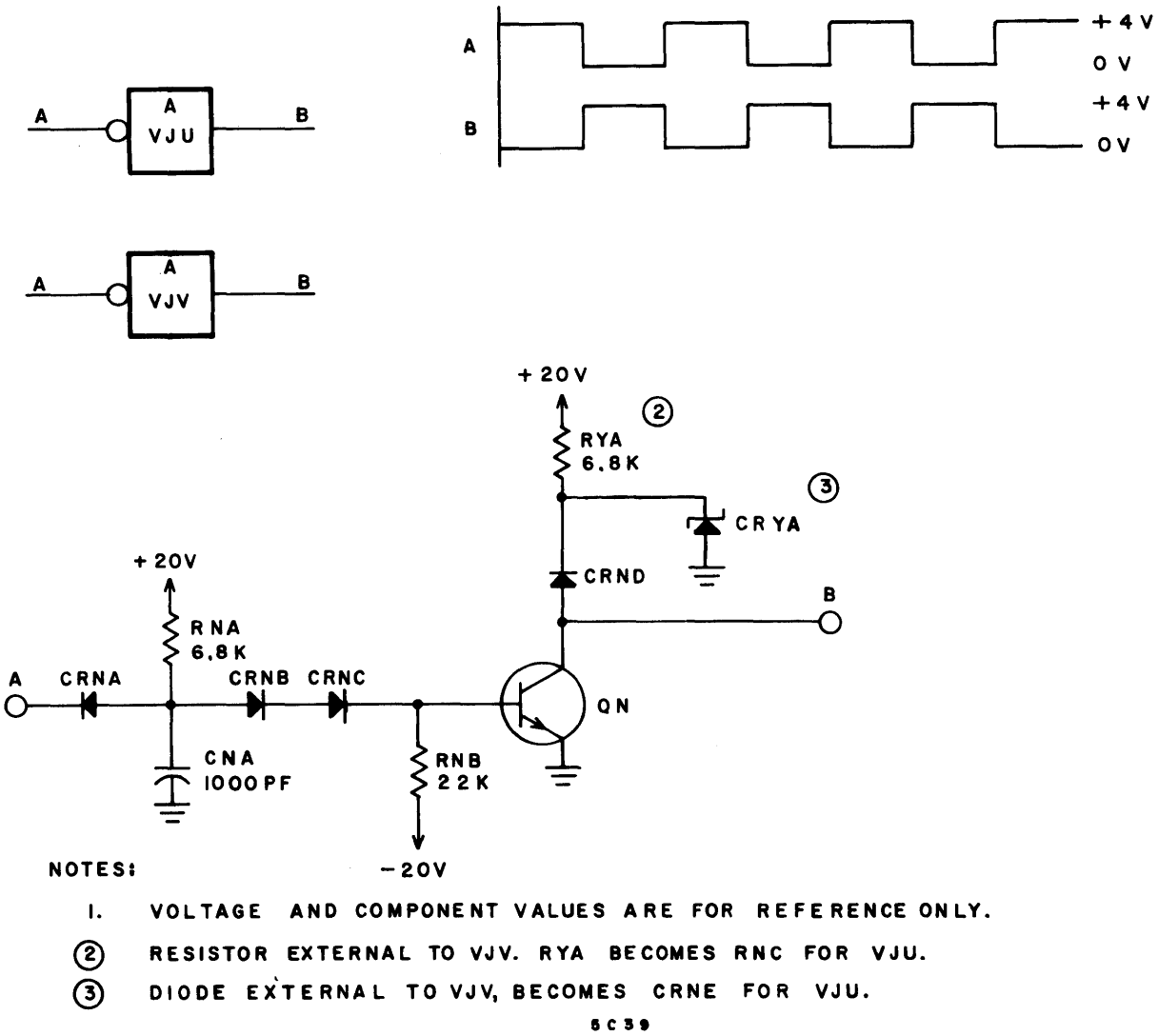

Figure 7-46. And - VJU, VJV

The trailing edge of the data pulse results in a positive pulse to the base of QP. Transistor QP turns off. Output E goes toward -4v. Both sides of CNA are at ground. Therefore, CRNC and CRNF are forward biased by the -20v source through RNC. The base of QN goes negative. Transistor QN turns on and Output D drops to ground. Diodes CRNM and CRNJ are now reverse biased. Since the collector of QP is more negative than the voltage across Zener diode CRNK (-3.6v), CRNN is forward biased. This clamps the voltage at output E at approximately -3.8v.

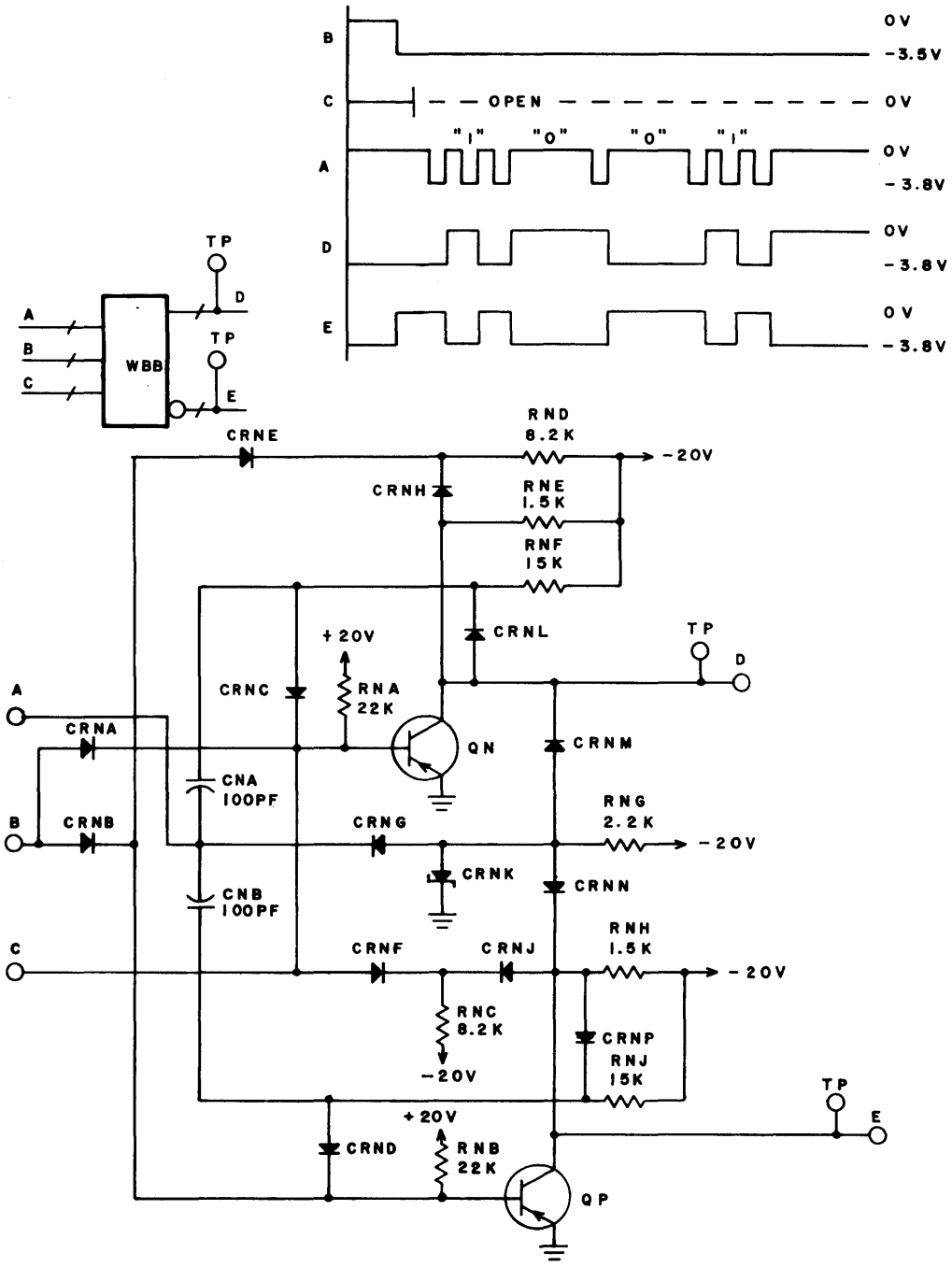

NOTE: VOLTAGE AND COMPONENT VALUES ARE FOR REFERENCE ONLY.

5C41

Figure 7-47. Flip-Flop - WBB

The leading edge of the next negative pulse charges CNA and discharges CNB since both sides of CNB are at about -3.8v. The flip-flop will toggle on the ground-going edge of the pulse in the same manner as described for the first pulse.

Toggle Flip-Flop - WBC

Inputs to A and B of the WBC flip-flop (Figure 7-48) are either a positive pulse or ground. If A has positive pulse, then B is at ground. If A is at ground then B has a positive pulse. If input A receives a positive pulse, output C will be at ground and output D will be a constant positive voltage. A positive pulse at B will toggle the flip-flop. C will then be a positive voltage and D will be at ground.

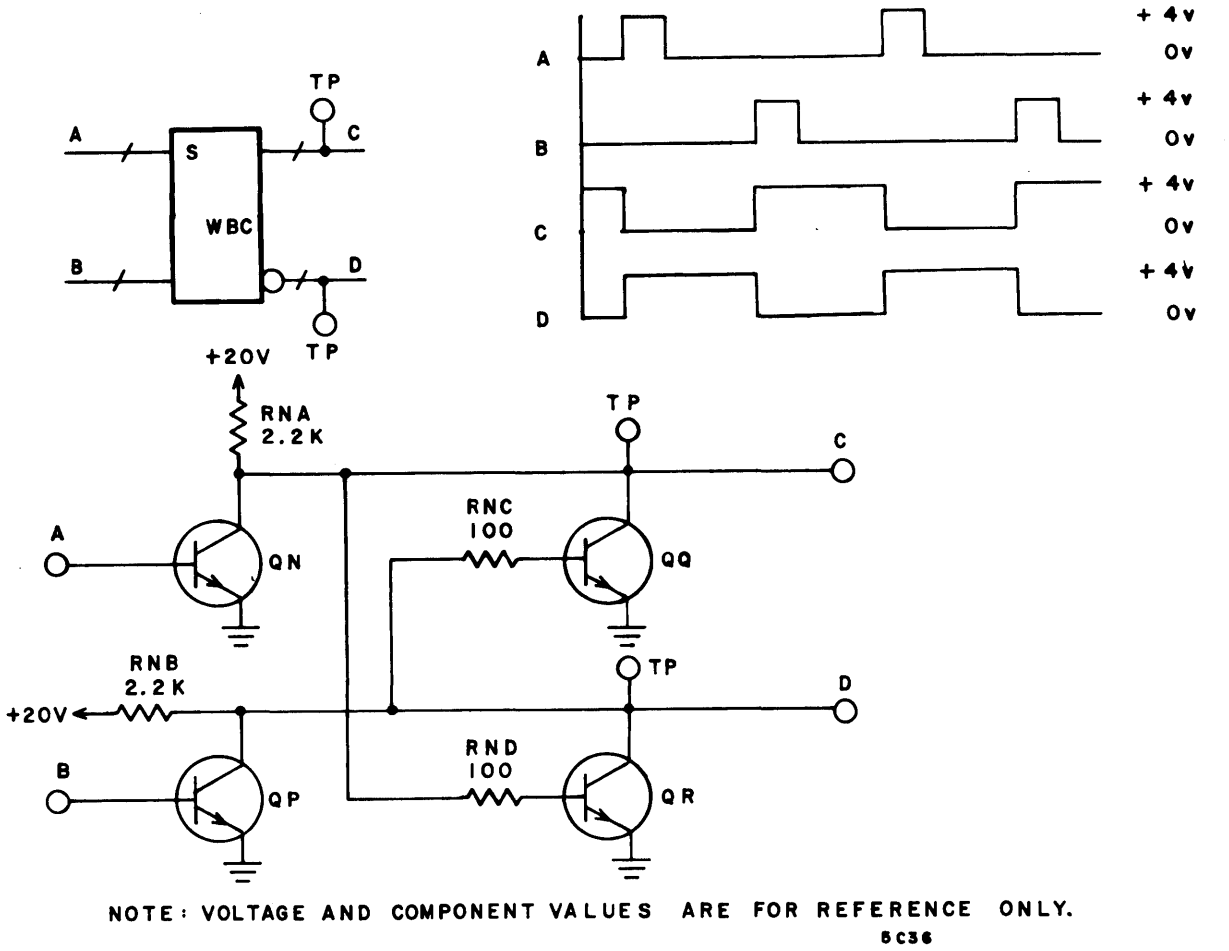

Figure 7-48. Toggle Flip-Flop - WBC

A positive pulse to input A turns on transistor QN, which drives the base of QR to ground. Transistor QR is turned off. Input B is at ground and QP is off. The base of QQ is, therefore, positive and QQ turns on. This latches the base of QR at ground and puts a ground on output C. With QP off and QR latched off, current flows from the +20v source through RNB to output D.

When a positive pulse is felt at B, QP turns on. This drives the base of QQ to ground, turning QQ off. Input A is at ground and QN is off. The base of QR is, therefore, positive. Transistor QR conducts, latching the base of QQ at ground and driving output D to ground. With QN and QQ off, output C is positive.

Pulse Shaper - XAA

The input to A and B (Figure 7-49) of the XAA circuit is a 0.7v balanced square wave centered around a positive voltage. Each time the inputs change polarity a short negative pulse is formed at output C.

The square wave input is sufficient to alternately turn QN and QQ on and off. A current of about 5.6 ma is alternately switched between QN and QQ. When input A is more positive than input B, QN turns off. The voltage at the collector of QN is about -20v. The voltage at the junction of RNG and RNJ is -1.6v. When the inputs switch, QN turns on. The collector of QN rises to about -8.7v. CNA forms a positive pulse to the base of QR. The positive pulse turns QR off, QT on and QV off for the duration of the pulse. The amplitude of the pulse is limited by CRNB. Charging time for CNA is about 100 nsec. When the inputs switch again, QQ turns on and QN turns off. CNB forms a positive pulse which turns QV off again for the duration of the pulse. The output at C is ground until QV is turned off. During the short time that QV is off, a negative pulse appears at output C.

Diodes CRND and CRNE prevent saturation of QR and QS. As the collectors of QR and QS approach ground, the negative voltage at the left ends of RNJ and RNK is limited to the sum of the voltage drops across QR and CRND or QS and CRNE, respectively. Diode CRNF prevents QV from saturating.

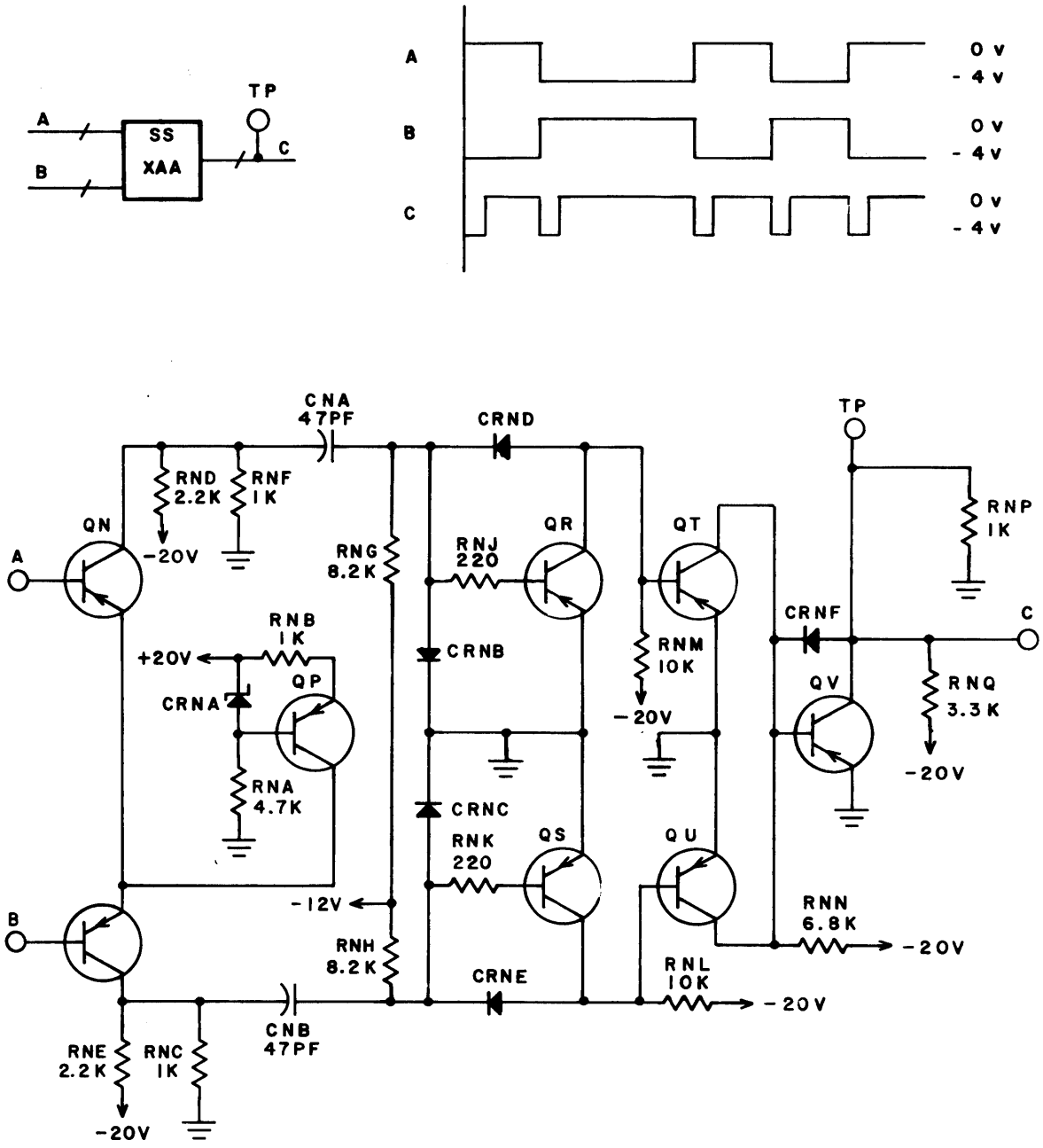

NOTE: VOLTAGE AND COMPONENT VALUES ARE FOR REFERENCE ONLY.

5C15

Figure 7-49. Pulse Shaper - XAA

Pulse Shaper - XAB

The input at A of the XAB circuit (Figure 7-50) is a balanced square wave between 0v and +4v. The output at B is normally positive, but drops to ground for a short time at the leading edge of the ground portion of the input wave.

During the positive portion of the input wave, transistors QN and QP are on. This leaves the bases of QQ and QR near ground. Transistors QQ and QR are off. The output at B is a positive voltage supplied through resistor RNE.

When the input wave goes to ground, transistors QN and QP turn off. With QP off, the base-emitter junction of QR is forward biased. Transistor QR conducts and the output at B drops to near ground. With QN off, capacitor CNA charges toward +20v. When the charge on CNA reaches a level sufficient to turn on QQ, the base of QR again drops to ground. Transistor QR turns off. The output at B returns to the positive level.

Pulse Shaper - XAC

The XAC circuit (Figure 7-51) produces a 100-nsec ground pulse at output C when the inputs at A and B change state. The output is normally positive. Input A is connected to the set side of a flip-flop and input B is connected to the clear side.

When the flip-flop is clear, the base of QR is positive. Transistor QR conducts 10 ma of current from the -20v supply through RND, RNC, QS, QR and RNB. The collector of QN is at +20v and the collector of QR is near +13v. Transistors QT and QU are on and QV and QW are off.

When the flip-flop sets, QR turns off and QN turns on. The collector of QN goes to +13v, which drives the base of QT to about -6v. This turns QT off, driving the base of QV positive. QV turns on and the output at C goes to ground. Capacitor CNA charges through RNE with a time constant of 135 nsec. After 100 nsec the voltage at the base of QT has risen to +0.7v and QT turns on. This drives the base of QV to ground. QV turns off and the output at C returns to a positive level.

When the flip-flop clears again, a 100-nsec ground pulse is formed at C by QR, CNB, QU and QW.

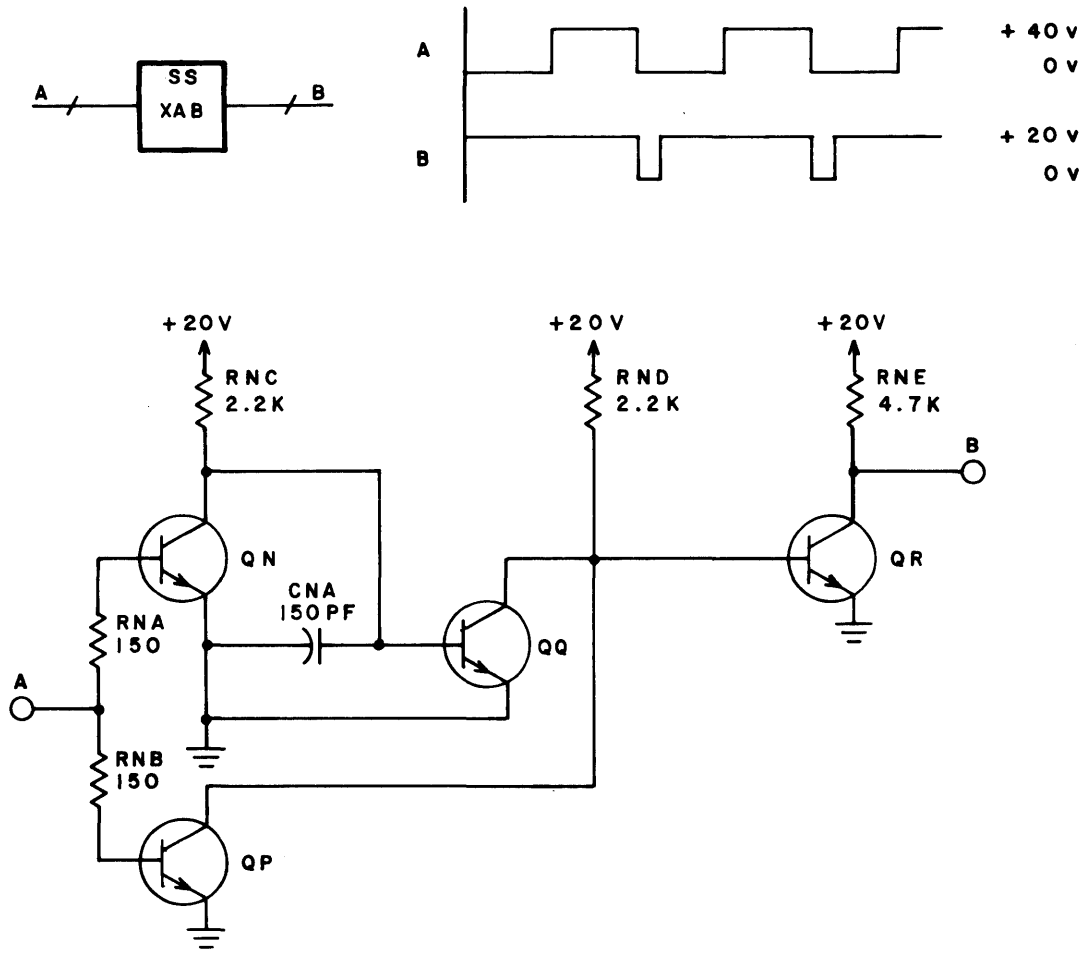

Figure 7-50. Pulse Shaper - XAB

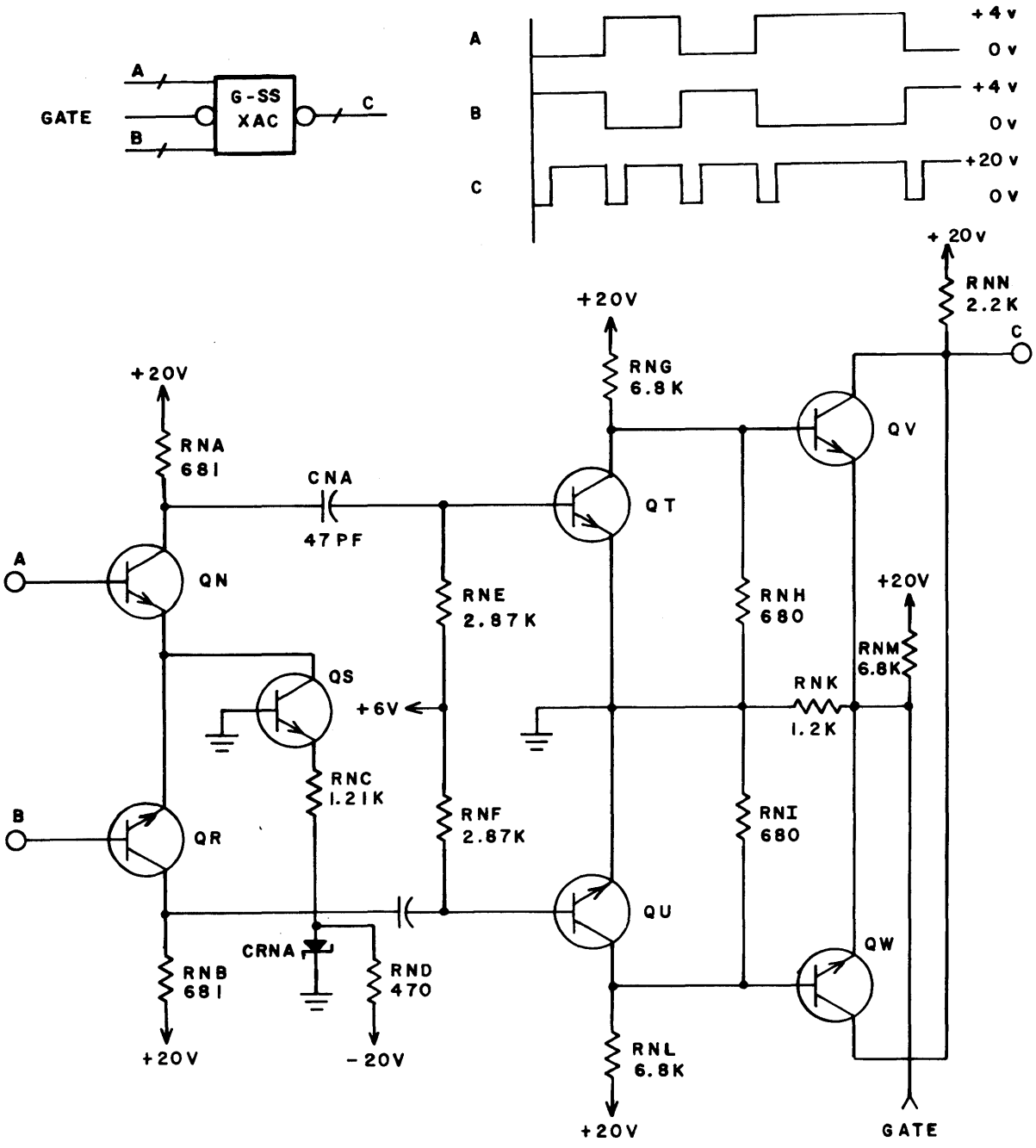

NOTE: VOLTAGE AND COMPONENT VALUES ARE FOR REFERENCE ONLY.

Figure 7-51. Pulse Shaper - XAC 5C6

HEAD AND DISK PACK REPLACEMENT CRITERIA

HEAD REPLACEMENT CRITERIA

Heads of the MDD have been designed so that they should not need replacement if given proper preventive maintenance and care. If a head requires replacement refer to the Preface of this manual for the publication containing the Maintenance section. Refer to that section for Head/Arm Replacement procedure. A head is defective and needs replacing if any of the following conditions exist:

1. Consistent oxide buildup on head, indicating repeated head/disk impact.
2. Appreciable oxide buildup located primarily on the edge of the ferrite insert, indicating a warped head.
3. Oxide or wear over 1/2 of the head face surface.
4. A head which is scratched over 1/2 of the head face surface.
5. Concentric scratches on disk surface. Inspect the head for imbedded particles.
6. Audible ping indicating that the head is hitting the disk surface.

DISK PACK REPLACEMENT CRITERIA

The disk pack is designed to last the lifetime of the equipment. Replacement of the disk pack is required only if excessive runout (see Disk Pack Runout Check) is encountered or physical damage to the pack results in the loss of recording ability.

A disk pack is defective and needs replacement if any of the following conditions exist:

1. Damage to the disk pack resulting in a bent or broken disk. If a disk is bent perform Disk Pack Runout Check procedure.
2. Gouged or scored disk surface causing the loss of stored data.
3. Imbedded particles in a disk surface that cannot be removed by cleaning and are causing damage to the heads.

Disk Pack Runout Check

This procedure determines whether a bent disk pack may remain in use. If the disk pack fails to meet the requirements of the procedure, it should be returned to the manufacturer for reconditioning.

1. Extend the upper deck drawer forward.
2. Release four half-turn fasteners securing right-hand shroud side cover. Set the side cover aside.
3. Install the disk pack to be checked on the spindle of the upper deck.
4. Grasp the pack cleaning brushes, override the shaft detent mechanism, and rotate the brushes into the disk pack.
5. Place the disk pack runout gage (P/N 84357600) base against the underside of the upper deck shield and set the switch on the base of the gage to ON (Figure 7-52).
6. Turn the bezel of the dial indicator to indicate zero. Orient the dial indicator so that the plastic tip is not only contacting a disk surface but is deflected for an indication of approximately 0.020 inch. Tighten dial indicator in this position. Turn the bezel to set the dial indicator to zero.

NOTE

A mirror is required to observe dial indicator when some disk surfaces are checked.

7. Manually and slowly rotate the disk pack one full revolution while carefully observing the dial indicator. The sum of the deviations (to either side of zero) should not exceed 0.012 inch.
8. If a total deflection of 0.012 inch is encountered in step 7, recheck the indication. The total deflection must occur in a disk circumference of 4 inches or more.
9. Repeat steps 6 through 8 for the 19 remaining disk surfaces.
10. Rotate the pack cleaning brushes clear of the disk surfaces.
11. Remove the disk pack and the disk pack runout gage.
12. Install the shroud side cover.

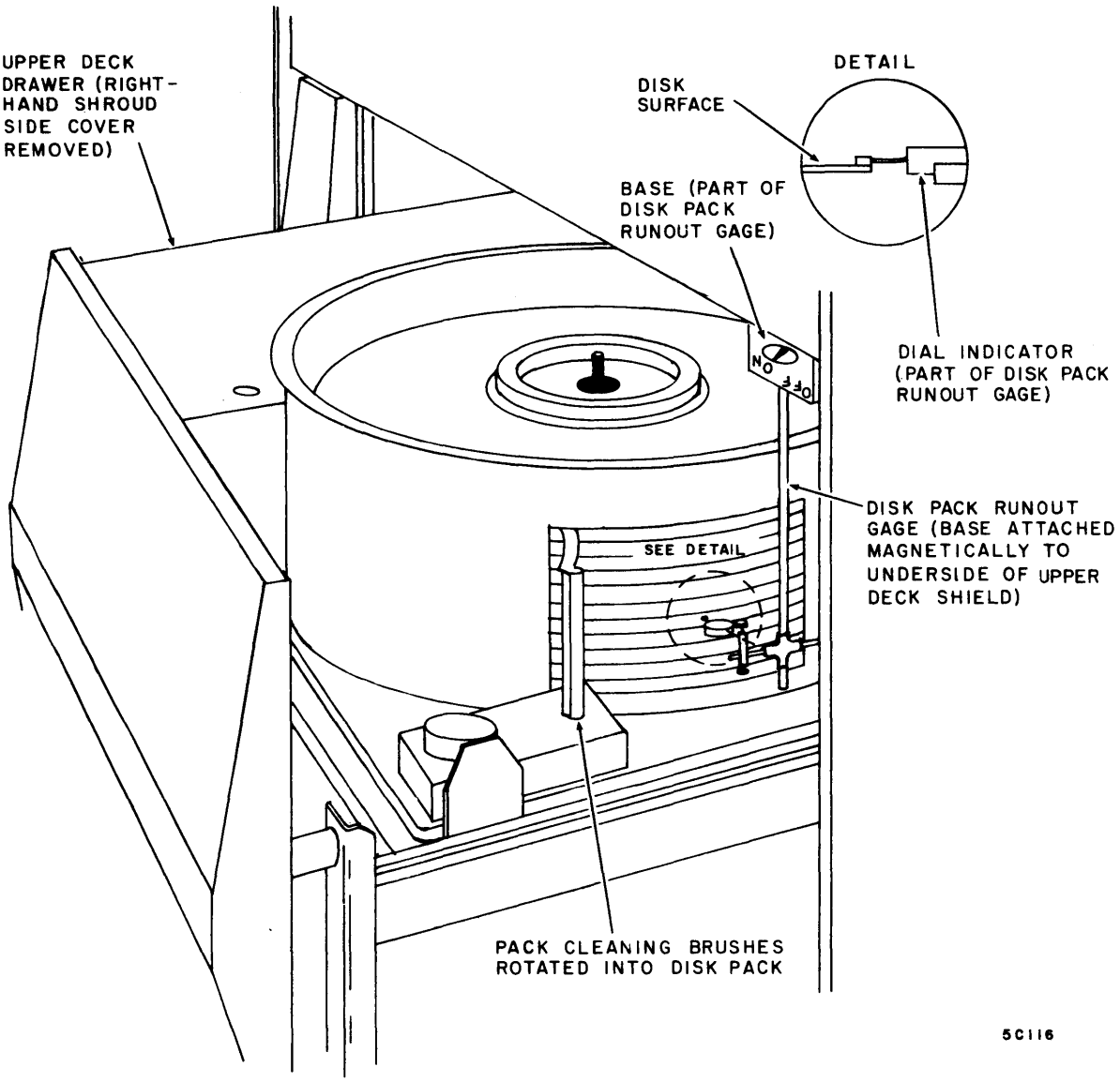

Figure 7-52. Disk Pack Runout Check

TESTER CARD

The Tester Card (P/N 40072100) is a special tool used extensively in the maintenance procedures of Section 6. As an aid in using the card, the schematic diagram (8FFN) is provided in Section 5 and Figure 7-53 is the logical portrayal of the same card.

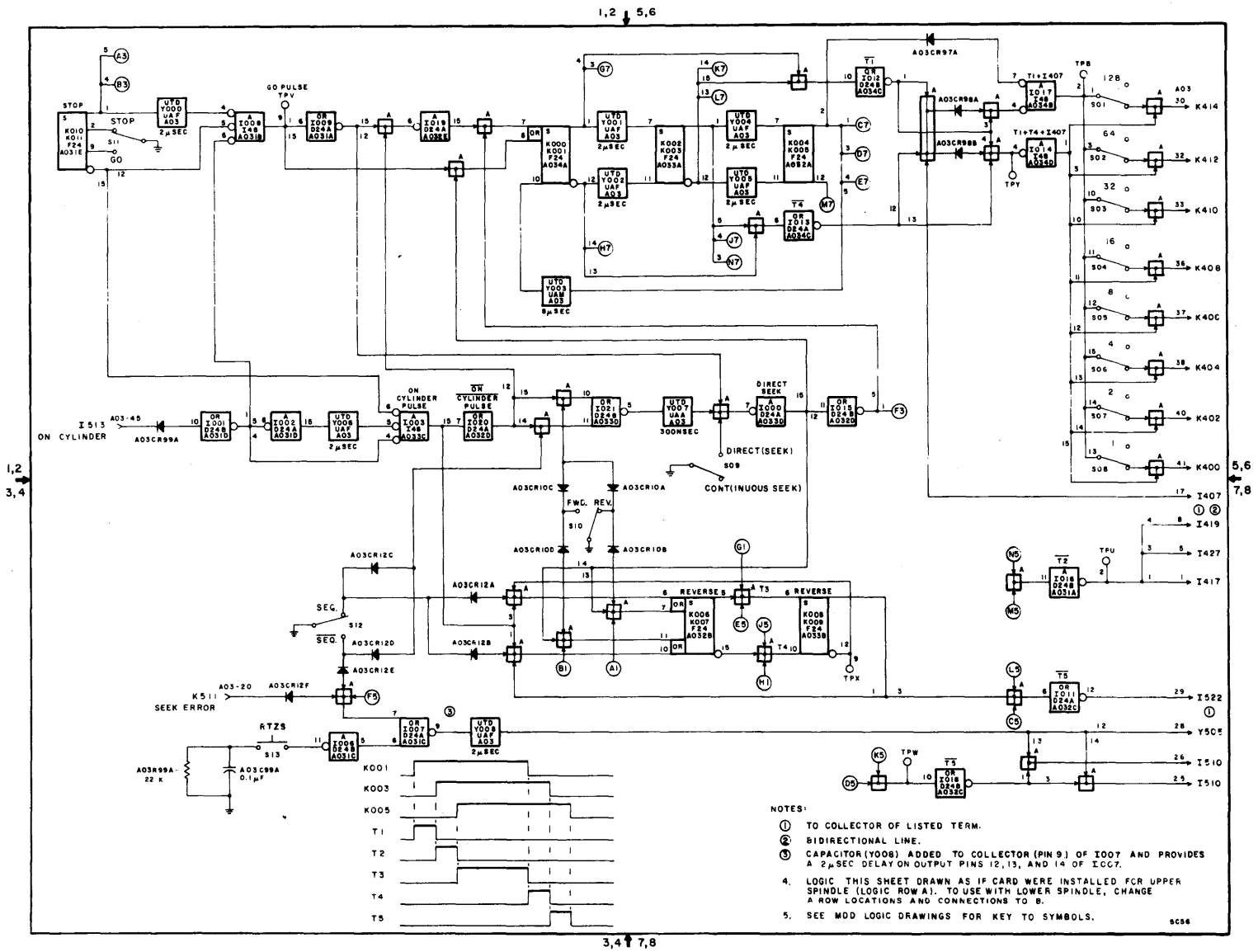

Figure 7-53. Logical Presentation of Tester Card

READ/WRITE TESTER CARD

The read/write tester card (p/n 54014500) is used during maintenance procedures that require reading or writing on a disk pack. The card is also used in troubleshooting procedures involving the fault detection circuit logic.

As an aid in using the card, the schematic diagram (9DMN) is provided in Section 5. The card is logically represented in Figure 7-54. Instructions for use of the card follow.

INSTALLATION AND REMOVAL

1. Stop spindle motor for deck to be tested.
2. Set associated ON LINE/OFF LINE switch to OFF LINE.
3. Set associated power supply DC/OFF switch to OFF.
4. Remove 9DNN card from logic chassis location B01 (for upper deck) or A01 (for lower deck). Install read/write tester card (p/n 54014500) in vacated location.
5. Set tester card ENABLE switch to OFF.
6. Set associated power supply DC/OFF switch to DC.
7. Start spindle motor. Deck will load heads and stop at track 00.
8. Ground test point on card at C01 or D02 that corresponds to the number of the head to be used in the read or write operation (selects head).
9. Position heads to track location specified by maintenance procedure.
10. Perform read or write operation specified by maintenance procedure according to following applicable paragraph.
11. When maintenance procedure is complete, stop spindle motor.
12. Set associated DC/OFF switch to OFF. Disconnect any oscilloscope connections.
13. Remove read/write tester card from logic chassis location A01 or B01 and install 9DNN card in vacated location.
14. Remove head selection jumper on card C01 or D02.
15. Set associated DC/OFF switch to DC.

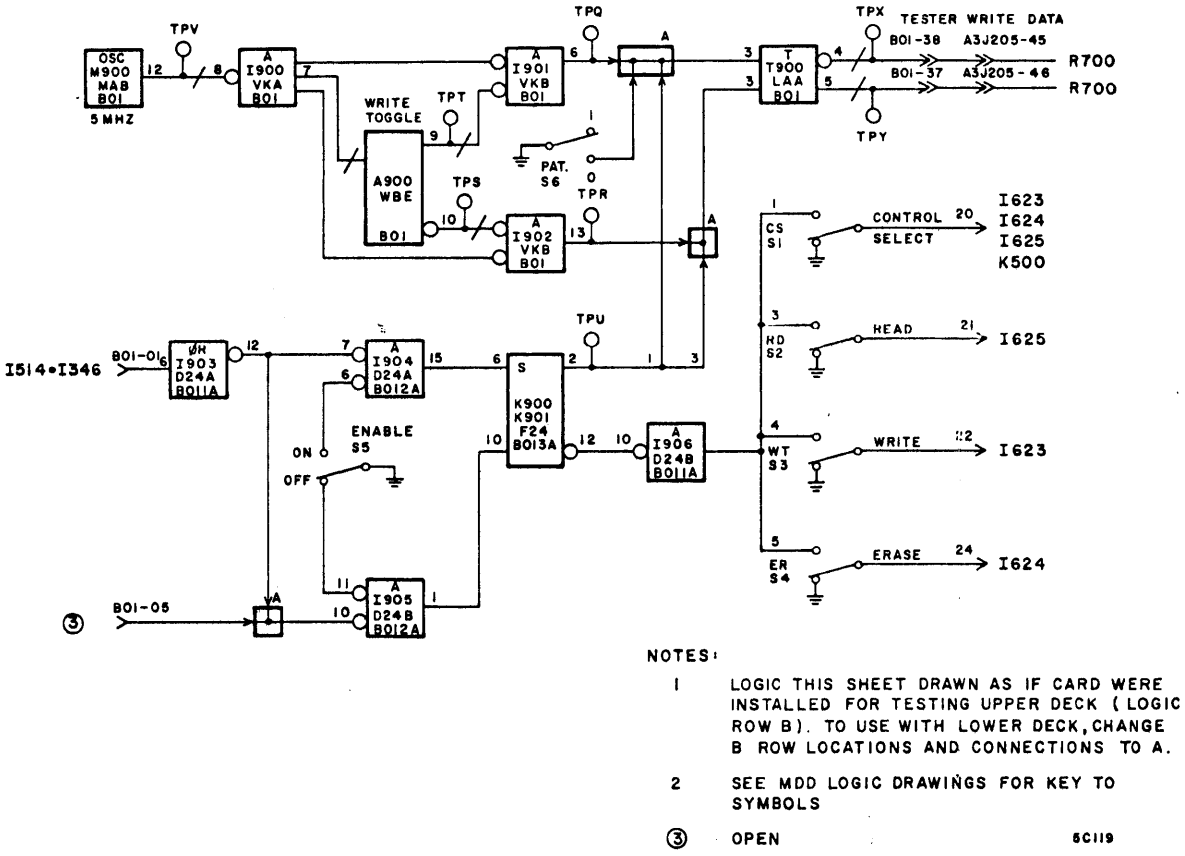

NOTES:

1. LOGIC THIS SHEET DRAWN AS IF CARD WERE INSTALLED FOR TESTING UPPER DECK (LOGIC ROW B). TO USE WITH LOWER DECK, CHANGE B ROW LOCATIONS AND CONNECTIONS TO A.
2. SEE MDD LOGIC DRAWINGS FOR KEY TO SYMBOLS

③ OPEN

6C119

Figure 7-54. Logical Presentation of Read/Write Tester Card

WRITE

The following procedure commands an MDD deck to write a series of all "1's" or "0's" (as selected) on a disk pack.

1. Set switches on card installed at B01 (upper deck) or A01 (lower deck) as follows:

NOTE

A fault condition may occur if card switches are manipulated without first setting ENABLE switch of OFF position.

ENABLE switch to OFF
CS (Control Select) switch toggle up
RD (Read) switch toggle down
WT (Write) switch toggle up
ER (Erase) switch toggle up
PAT (Pattern) switch to 1 or 0 as desired

2. When it is desired to write the selected pattern, set tester card ENABLE switch to ON. Disk pack is written on in first revolution.
3. Return tester card ENABLE switch to OFF.
4. Proceed with maintenance procedure. Return to step 11 of Read/Write Tester Card Installation and Removal procedure when maintenance procedure is completed.

READ

The following procedure commands and MDD deck to read data from the disk pack track at which the heads are currently located.

1. Set switches on card installed at B01 (upper deck) or A01 (lower deck) as follows:

NOTE

A fault condition may occur if card switches are manipulated without first setting ENABLE switch to OFF position.

ENABLE switch to OFF
CS (Control Select) switch toggle up
RD (Read) switch toggle up
WT (Write) switch toggle down
ER (Erase) switch toggle down

2. When it is desired to read, set tester card ENABLE switch to ON. Deck will perform read operation until ENABLE switch is set to OFF.

NOTE

All Section 6 maintenance procedures requiring that data be read from the disk pack, specify the required oscilloscope connections for that test or adjustment. Do not deviate. If, however, unspecified troubleshooting is being performed, the read operation may be observed at test point H (Read Data) of the card located at A28 (upper deck) or A26 (lower deck). Observed data will be in accordance with Figure 7-55.

3. Proceed with maintenance procedure. Return to step 11 of Read/Write Tester Card Installation and Removal procedure when maintenance is completed.

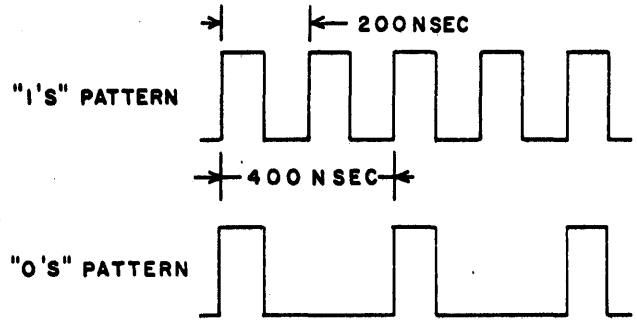

OSCILLOSCOPE (SUGGESTED):
VERT – 1 V/CM
HOR – 0.1 μ SEC/CM
SYNC – INTERNAL

6C124

Figure 7-55. Read Data Trace

SECTION 8

PARTS DATA

Information for this section is included in BM101 and BM103 Multiple Disk Drive
Pub. No. 41243700

SECTION 9

WIRE LISTS

WIRE LISTS

DESCRIPTION OF WIRE LISTS

The two types of wire lists are:

1. The line printer format which shows logic wiring.
2. The corporate (typed) form which shows non-logic wiring.

LOGIC WIRE LISTS

The following is an example of the logic wire lists with an identification, and an explanation of the columns.

Wire Identification	Wire Length	Wire Origin Location	Wire Origin Pin Number	Component Code	Wire Destination Location	Wire Destination Pin Number	Wire Size	Color Code	Change Order
AK50010	03	A14	28	O	A16	18			
AK50020	05	A14	25	O	A08	14			
AK50030	05	A14	14	O	A09	37			
AK50210	04	A07	10	O	A11	16			
AK50211	04	A11	16	O	A18	34			
1100520	02	B06	48	R	B07	48	20	222	1234
1100521	02	B07	48	R	B08	48	20	222	5678
1100522	02	B08	48	R	B09	48	20	222	
1100523	02	B09	48	R	B10	48	20	222	
1100524	02	B10	48	R	B11	48	20	222	

Wire Identification

If the identifier begins with a letter, the wire provides an input to a logic term; first letter identifies the logic row of the term, second letter and the first three digits identify the logic term receiving the input via this wire. If the identifier begins with a numeral, the wire is not directly providing an input to a logic term and is generally classified as a miscellaneous jumper. A sequential advance in the second to the last digit indicates additional inputs to the same term.

AK50010 - single input OR to K500
AK50020 - single input OR to K500

A sequential advance in the last digit indicates the interconnections of an AND input.

AK50210 }
AK50211 } Two input AND to K502

Wire Length

This column gives the wire length in inches.

Wire Origin Location

This column locates the origin of the wire on the logic chassis. Wires having a common signal at two or more locations are interconnected in series. In the sample, the fourth and fifth wires shown have a common signal. The Wire Destination Location of the first wire becomes the Wire Origin Location of the second so that the series string is from A07 pin 10 to A11 pin 16 to A13 pin 34. Note that the first four characters of the Wire Identification terms are the same for the three wires and that the sequencing is from 10 to 11 in the last two characters.

Wire Origin Pin Number

This column identifies the origin pin or terminal of the wire.

Component Code

This column identifies the components that are located in the Wire Origin Location and the Wire Destination Location columns. The code letters are identified as follows:

O - When both ends terminate at a logic card

R - When one end terminates at a miscellaneous component (switch, resistor, etc.)

X - When one end terminates at a jack (or connector pin)

Wire Desitnation Location

This column locates the destination of the wire on the logic chassis.

Wire Destination Pin Number

This column identifies the destination pin or terminal of the wire.

Wire Size

This column identifies the size (AWG) of the wire.

Color Code

Solid colored wires are identified by repeating (3 times) the code number in this column. Multicolored wires are identified by a number having two or three digits. Each digit of the number identifies one of the colors. The code numbers are identified as follows:

0 - Black	2 - Red	4 - Yellow	6 - Blue	8 - Gray	S - Shield
1 - Brown	3 - Orange	5 - Green	7 - Violet	9 - White	

Change Order

This column identifies the engineering, field, or publications change order that affected and/or altered that wire.

NON-LOGIC LISTS

CONTROL DATA
COMPUTER DIVISION

TITLE: WIRE LISTING

WL | DOCUMENT NO. | REV.

SHEET OF

CONDUCTOR IDENT.	FIND NO.	GAUGE (REF.)	COLOR (REF.)	LENGTH (APPROX.)	ORIGIN		ACCESS FIND NO.	DESTINATION		ACCESS FIND NO.	REMARKS
20	29	24	993	03	X12	03		X12	09		
21	29	↑	993	03	X13	03		X13	09		
22	29		993	03	X14	03		X14	09		
23	29		993	03	X15	03		X15	09		
24	29		993	03	X16	03		X16	09		

Wire lists other than logic are on a standard corporate form. The remaining columns of the form contain information NOT normally applicable to field usage and therefore are not explained.

The other columns indicate:

Gauge (Ref) - Size of conductor (AWG)

Color (Ref) - Color information

Length (Approx) - Length of conductor in inches

Origin - Origin point of conductor

Destination - Destination point of conductor

Remarks - Useful comments

In multi-digit color codes, the first digit denotes base color and the remaining digits denote tracer colors. The color codes for the non-logic lists are the same as those for logic wiring.

DRWN			CONTROL DATA	TITLE	PREFIX	DOCUMENT NO.	REV
CHKD			NORMANDALE DIVISION	LOGIC WIRE LIST LOGIC CHASSIS	LW	70811900	F
ENG			CODE IDENT 19333	FIRST USED ON MULT DISK DRIVE		SHEET 1 OF 1	
MFG							
APPD							

SHEET REVISION STATUS

REVISION RECORD

REV	ECO	DESCRIPTION	DRFT	DATE	APP
A		RELEASED		6-19-69	
B	PE11118	CHANGED 2 CARDS	EW	9-16-69	
C	PE11286	DELETED NOTES FROM CARDS	EW	1-5-70	
D	PE11352	CHG SEVERAL CARDS	EW	1-26-70	
E	PE11446	ADDED 12 WIRES	EW	3-12-70	
F	PE21103	ADDED 4 CARDS	EW		

NOTES:

PRINT OUT 70811900
DN 70811900
DETACHED LISTS

CONTROL DATA	NORMANDALE DIVISION	CODE IDENT 19333	SHEET 1 OF 1	DN	DOCUMENT NO 70811900	REV F

NOTES:

1. FOR MECH ASSY AND PL SEE 40016000, 40016001.
2. FOR CARD PLACEMENT LIST AND LOGIC SCHEMATIC SEE SUB-FINAL ASSY 40068042, 40068142 (1X) OR 40068242, 40068342 (2X).
3. INSTALL A SOLID BLACK JUMPER WIRE, FIND NO. 76, FROM PIN 2 AND PIN 50 OF EACH CONNECTOR, NUMBER A01 THRU A29 AND B01 THRU B29, TO THE CLOSEST HOLE IN THE CONNECTOR MOUNTING BAR FOR GROUNDING.
4. THESE WIRES ARE PRESENT IN A DUAL CHANNEL UNIT ONLY. (LOGIC CHASSIS 40016000).
5. THESE WIRES ARE PRESENT IN A SINGLE CHANNEL UNIT ONLY. (LOGIC CHASSIS 40016001).

AA2105

PRINTED IN U.S.A.

AI10010	04	A21	13	0	A25	08	LOGIC CHASSIS
AI10011	02	A21	13	0	A21	18	LOGIC CHASSIS NOTE5
AI10020	08	A21	12	0	B25	08	LOGIC CHASSIS
AI10110	04	A21	16	0	A25	13	LOGIC CHASSIS
AI10111	02	A21	16	0	A21	17	LOGIC CHASSIS NOTE5
AI10120	08	A21	08	0	B25	13	LOGIC CHASSIS
AI10210	04	A21	10	0	A25	18	LOGIC CHASSIS
AI10211	02	A21	10	0	A21	22	LOGIC CHASSIS NOTE5
AI10220	09	A21	05	0	B25	18	LOGIC CHASSIS
AI10310	05	A21	14	0	A27	08	LOGIC CHASSIS
AI10311	02	A21	14	0	A21	21	LOGIC CHASSIS NOTE5
AI10320	08	A21	09	0	B27	08	LOGIC CHASSIS
AI10410	05	A21	33	0	A27	13	LOGIC CHASSIS
AI10411	02	A21	33	0	A21	41	LOGIC CHASSIS NOTE5
AI10420	08	A21	32	0	B27	13	LOGIC CHASSIS
AI10510	05	A21	30	0	A27	18	LOGIC CHASSIS
AI10511	02	A21	30	0	A21	42	LOGIC CHASSIS NOTE5
AI10520	07	A21	40	0	B27	18	LOGIC CHASSIS
AI10610	06	A21	29	0	A29	08	LOGIC CHASSIS
AI10611	02	A21	29	0	A21	44	LOGIC CHASSIS NOTE5
AI10620	07	A21	38	0	B29	08	LOGIC CHASSIS
AI10710	06	A21	36	0	A29	13	LOGIC CHASSIS
AI10711	02	A21	36	0	A21	45	LOGIC CHASSIS NOTE5
AI10720	08	A21	37	0	B29	13	LOGIC CHASSIS
AI10810	04	A21	01	0	A20	25	LOGIC CHASSIS
AI10910	02	A21	34	0	A19	29	LOGIC CHASSIS
AI11810	09	A16	44	0	B25	38	LOGIC CHASSIS
AI11811	05	A16	44	0	A15	02	LOGIC CHASSIS NOTE5
AI11820	06	A16	45	0	A25	38	LOGIC CHASSIS
AI12010	04	A16	41	0	A12	28	LOGIC CHASSIS
AI12110	06	A16	21	0	A25	44	LOGIC CHASSIS
AI12210	09	A16	42	0	B25	44	LOGIC CHASSIS
AI12211	04	A16	42	0	A16	02	LOGIC CHASSIS NOTE5
AI20010	05	A17	21	0	A12	36	LOGIC CHASSIS
AI20020	08	A17	25	0	A29	44	LOGIC CHASSIS
AI20110	11	A17	29	0	B29	44	LOGIC CHASSIS
AI20111	02	A17	29	0	A17	02	LOGIC CHASSIS NOTE5
AI20120	02	A17	40	0	A17	21	LOGIC CHASSIS 11286
AI21510	03	A18	22	0	A20	25	LOGIC CHASSIS
AI21710	04	A18	05	0	A19	29	LOGIC CHASSIS
AI21810	05	A19	08	0	A25	24	LOGIC CHASSIS
AI22110	06	A19	12	0	A27	24	LOGIC CHASSIS
AI22310	07	A19	14	0	A29	32	LOGIC CHASSIS
AI22410	03	A19	18	0	A20	32	LOGIC CHASSIS
AI22411	02	A19	18	0	A19	02	LOGIC CHASSIS NOTE5
AI22510	07	A19	40	0	A29	24	LOGIC CHASSIS
AI22810	07	A19	42	0	A29	18	LOGIC CHASSIS
AI23010	03	A19	21	0	A18	21	LOGIC CHASSIS
AI23210	02	A19	34	0	A20	26	LOGIC CHASSIS
AI23310	09	A20	08	0	B25	24	LOGIC CHASSIS
AI23410	02	A20	05	0	A19	09	LOGIC CHASSIS
AI23420	02	A20	01	0	A19	10	LOGIC CHASSIS
AI23430	02	A20	09	0	A19	05	LOGIC CHASSIS
AI23440	02	A20	12	0	A19	17	LOGIC CHASSIS
AI23510	10	A20	10	0	B27	24	LOGIC CHASSIS

AI23610	10	A20	22	0	B29	32	LOGIC CHASSIS	
AI23710	02	A20	21	0	A19	30	LOGIC CHASSIS	
AI23810	10	A20	13	0	B29	24	LOGIC CHASSIS	
AI23910	04	A20	17	0	A19	37	LOGIC CHASSIS	
AI23920	04	A20	20	0	A19	38	LOGIC CHASSIS	
AI23930	04	A20	14	0	A19	36	LOGIC CHASSIS	
AI23940	04	A20	16	0	A19	41	LOGIC CHASSIS	
AI24010	09	A20	18	0	B29	18	LOGIC CHASSIS	
AI24110	02	A20	29	0	A19	21	LOGIC CHASSIS	
AI24310	03	A20	37	0	A19	26	LOGIC CHASSIS	
AI24410	04	A20	45	0	A19	13	LOGIC CHASSIS	
AI24910	03	A19	24	0	A17	28	LOGIC CHASSIS	11286
AI25010	04	A20	41	0	A17	30	LOGIC CHASSIS	
AI30110	05	A10	09	0	A09	41	LOGIC CHASSIS	
AI30910	02	A10	01	0	A09	05	LOGIC CHASSIS	
AI31310	02	A10	21	0	A11	22	LOGIC CHASSIS	
AI32010	02	A09	21	0	A10	21	LOGIC CHASSIS	
AI32210	03	A09	44	0	A10	25	LOGIC CHASSIS	
AI33010	11	A09	28	0	A27	44	LOGIC CHASSIS	
AI33020	12	A09	29	0	B27	44	LOGIC CHASSIS	
AI33021	03	A09	29	0	A09	02	LOGIC CHASSIS	NOTE5
AI34510	06	A18	38	0	A09	42	LOGIC CHASSIS	
AI34710	06	A18	16	0	A10	17	LOGIC CHASSIS	
AI34711	03	A10	17	0	A09	25	LOGIC CHASSIS	
AI34910	07	A18	41	0	A09	16	LOGIC CHASSIS	
AI36010	02	A09	01	0	A10	12	LOGIC CHASSIS	
AI36020	02	A09	09	0	A10	05	LOGIC CHASSIS	
AI36030	02	A09	12	0	A10	20	LOGIC CHASSIS	
9113 AI36040	02	A09	17	0	A10	13	LOGIC CHASSIS	
AI36110	03	A09	20	0	A10	29	LOGIC CHASSIS	
AI36120	02	A09	24	0	A10	22	LOGIC CHASSIS	
AI36130	02	A09	32	0	A10	36	LOGIC CHASSIS	
AI36140	02	A09	36	0	A10	33	LOGIC CHASSIS	
AI36210	03	A09	38	0	A10	45	LOGIC CHASSIS	
AI36220	02	A09	45	0	A10	40	LOGIC CHASSIS	
AI36230	04	A09	34	0	A10	14	LOGIC CHASSIS	
AI36810	06	A09	40	0	A19	32	LOGIC CHASSIS	11286
AI36811	02	A19	32	0	A20	38	LOGIC CHASSIS	11286
AI36820	03	A09	37	0	A08	25	LOGIC CHASSIS	
AI40010	11	A12	05	0	B25	32	LOGIC CHASSIS	
AI40011	02	A12	05	0	A12	02	LOGIC CHASSIS	NOTE5
AI40020	08	A12	08	0	A25	32	LOGIC CHASSIS	
AI40710	05	A12	36	0	A08	09	LOGIC CHASSIS	
AI40720	03	A12	37	0	A14	29	LOGIC CHASSIS	
AI40730	04	A12	32	0	A07	38	LOGIC CHASSIS	
AI40910	03	A13	21	0	A12	10	LOGIC CHASSIS	
AI40911	04	A12	10	0	A08	20	LOGIC CHASSIS	
12 AI41010	05	A12	09	0	A08	21	LOGIC CHASSIS	
11 AI41011	03	A12	09	0	A13	24	LOGIC CHASSIS	
10 AI41210	04	A11	08	0	A12	40	LOGIC CHASSIS	
9 AI41211	04	A12	40	0	A13	13	LOGIC CHASSIS	
8 AI41220	05	A11	05	0	A12	41	LOGIC CHASSIS	
7 AI41221	04	A12	41	0	A13	17	LOGIC CHASSIS	
6 AI41310	04	A11	01	0	A12	34	LOGIC CHASSIS	
5 AI41510	04	A11	12	0	A12	38	LOGIC CHASSIS	
4								
3								

AI41511	04	A12	38	0	A13	09	LOGIC CHASSIS
AI41710	04	A13	45	0	A11	17	LOGIC CHASSIS
AI41810	03	A13	41	0	A11	29	LOGIC CHASSIS
AI42210	03	A12	20	0	A13	08	LOGIC CHASSIS
AI42220	04	A12	21	0	A13	01	LOGIC CHASSIS
AI42230	02	A12	22	0	A13	18	LOGIC CHASSIS
AI42710	04	A13	42	0	A11	13	LOGIC CHASSIS
AI50910	04	A08	16	0	A12	17	LOGIC CHASSIS
AI50920	04	A08	18	0	A12	12	LOGIC CHASSIS
AI50930	02	A08	17	0	A09	14	LOGIC CHASSIS
AI51310	05	A11	41	0	A07	09	LOGIC CHASSIS
AI51410	04	A11	21	0	A07	25	LOGIC CHASSIS
AI52010	06	A07	20	0	A14	38	LOGIC CHASSIS
AI52020	07	A07	14	0	A17	14	LOGIC CHASSIS
AI52030	02	A07	21	0	A08	09	LOGIC CHASSIS
AI52110	04	A11	36	0	A08	13	LOGIC CHASSIS
AI52210	04	A07	24	0	A11	32	LOGIC CHASSIS
AI52220	02	A07	32	0	A08	25	LOGIC CHASSIS
AI52230	03	A07	30	0	A08	16	LOGIC CHASSIS
AI52310	06	A08	29	0	A17	12	LOGIC CHASSIS
AI52320	11	A08	28	0	A27	38	LOGIC CHASSIS
AI52330	13	A08	30	0	B27	38	LOGIC CHASSIS
AI52331	03	A08	30	0	A08	50	LOGIC CHASSIS NOTE5
AI52340	07	A08	32	0	A17	13	LOGIC CHASSIS
AI60010	11	A08	41	0	A27	32	LOGIC CHASSIS
AI60020	12	A08	44	0	B27	32	LOGIC CHASSIS
AI60021	05	A08	44	0	A07	02	LOGIC CHASSIS NOTE5
AI60210	06	A15	01	0	A08	33	LOGIC CHASSIS
AI60610	05	A15	26	0	A08	40	LOGIC CHASSIS
AI61210	05	A17	22	0	A11	36	LOGIC CHASSIS
AI62210	05	A14	05	0	A11	44	LOGIC CHASSIS
AI62310	02	A14	13	0	A15	05	LOGIC CHASSIS
AI62410	02	A14	16	0	A15	10	LOGIC CHASSIS
AI62510	02	A14	12	0	A15	18	LOGIC CHASSIS
AI63810	06	A09	40	0	A17	30	LOGIC CHASSIS NOTE5
AK10010	04	A16	33	0	A21	18	LOGIC CHASSIS
AK10210	04	A16	25	0	A21	17	LOGIC CHASSIS
AK10410	04	A16	22	0	A21	22	LOGIC CHASSIS
AK10610	05	A16	12	0	A21	21	LOGIC CHASSIS
AK10810	04	A16	37	0	A21	41	LOGIC CHASSIS
AK11010	04	A16	29	0	A21	42	LOGIC CHASSIS
AK11210	05	A16	18	0	A21	44	LOGIC CHASSIS
AK11410	06	A16	08	0	A21	45	LOGIC CHASSIS
AK20210	03	A19	28	0	A20	44	LOGIC CHASSIS
AK20310	07	A19	22	0	A29	38	LOGIC CHASSIS
AK20510	09	A20	40	0	B29	38	LOGIC CHASSIS
AK30010	04	A09	10	0	A13	32	LOGIC CHASSIS
AK30210	04	A09	08	0	A13	20	LOGIC CHASSIS
AK30410	03	A09	14	0	A13	12	LOGIC CHASSIS
AK30610	05	A09	33	0	A13	05	LOGIC CHASSIS
AK30810	04	A09	22	0	A12	25	LOGIC CHASSIS
AK35010	03	A09	13	0	A10	32	LOGIC CHASSIS
AK40010	03	A13	32	0	A14	13	LOGIC CHASSIS
AK40210	02	A13	20	0	A14	12	LOGIC CHASSIS
AK40410	02	A13	12	0	A15	08	LOGIC CHASSIS

AK40610	05	A13	05	0	A15	41	LOGIC CHASSIS	
AK40620	03	A13	30	0	A12	13	LOGIC CHASSIS	
AK40710	03	A13	40	0	A12	26	LOGIC CHASSIS	
AK40810	03	A12	25	0	A14	16	LOGIC CHASSIS	
AK41010	04	A12	17	0	A16	29	LOGIC CHASSIS	
AK41210	04	A12	12	0	A14	28	LOGIC CHASSIS	
AK41410	04	A12	01	0	A16	08	LOGIC CHASSIS	
AK50010	03	A14	28	0	A16	18	LOGIC CHASSIS	
AK50020	05	A14	25	0	A08	14	LOGIC CHASSIS	
AK50030	06	A14	14	0	A08	12	LOGIC CHASSIS	
AK50210	04	A07	10	0	A11	16	LOGIC CHASSIS	
AK50211	04	A11	16	0	A13	34	LOGIC CHASSIS	
AK50212	04	A13	34	0	A11	42	LOGIC CHASSIS	21103
AK50310	02	A07	12	0	A08	05	LOGIC CHASSIS	
AK50311	05	A08	05	0	A13	28	LOGIC CHASSIS	
AK50610	04	A07	26	0	A11	14	LOGIC CHASSIS	
AK50620	04	A07	33	0	A08	13	LOGIC CHASSIS	
AK50710	05	A07	36	0	A11	09	LOGIC CHASSIS	
AK50810	05	A07	42	0	A11	13	LOGIC CHASSIS	
AK50910	05	A07	40	0	A11	10	LOGIC CHASSIS	
AK51110	02	A11	32	0	A12	37	LOGIC CHASSIS	
AK51120	04	A11	37	0	A11	50	LOGIC CHASSIS	21103
AK60010	04	A15	05	0	A16	33	LOGIC CHASSIS	
AK60210	02	A15	18	0	A16	25	LOGIC CHASSIS	
AK60410	03	A15	08	0	A16	22	LOGIC CHASSIS	
AK60610	04	A15	41	0	A16	12	LOGIC CHASSIS	
AK60810	04	A15	10	0	A16	37	LOGIC CHASSIS	
AK61010	04	A17	36	0	A14	21	LOGIC CHASSIS	
AK61210	05	A17	37	0	A11	33	LOGIC CHASSIS	
AK61410	04	A17	17	0	A14	24	LOGIC CHASSIS	
AK61810	04	A17	24	0	A14	10	LOGIC CHASSIS	
AK62010	04	A17	01	0	A14	17	LOGIC CHASSIS	
AT00010	07	A24	01	0	A16	34	LOGIC CHASSIS	
AT00020	11	A24	05	0	B16	34	LOGIC CHASSIS	
AT00110	06	A24	12	0	A16	26	LOGIC CHASSIS	
AT00120	10	A24	14	0	B16	26	LOGIC CHASSIS	
AT00210	06	A24	17	0	A16	20	LOGIC CHASSIS	
AT00220	09	A24	18	0	B16	20	LOGIC CHASSIS	
AT00310	06	A24	25	0	A16	09	LOGIC CHASSIS	
AT00320	08	A24	26	0	B16	09	LOGIC CHASSIS	
AT00410	06	A24	30	0	A16	38	LOGIC CHASSIS	
AT00420	09	A24	32	0	B16	38	LOGIC CHASSIS	
AT00510	06	A24	36	0	A16	30	LOGIC CHASSIS	
AT00520	09	A24	37	0	B16	30	LOGIC CHASSIS	
AT00610	07	A24	41	0	A16	16	LOGIC CHASSIS	
AT00620	08	A24	42	0	B16	16	LOGIC CHASSIS	
AT00710	07	A26	01	0	A16	05	LOGIC CHASSIS	
AT00720	10	A26	05	0	B16	05	LOGIC CHASSIS	
AT00810	05	A26	12	0	A20	28	LOGIC CHASSIS	
AT00811	03	A26	12	0	A26	02	LOGIC CHASSIS	NOTE5
AT00820	10	A26	14	0	B20	28	LOGIC CHASSIS	
AT00821	04	A26	14	0	A25	02	LOGIC CHASSIS	NOTE5
AT01210	07	A28	01	0	A18	12	LOGIC CHASSIS	
AT01220	10	A28	05	0	B18	12	LOGIC CHASSIS	
AT01310	07	A28	12	0	A18	10	LOGIC CHASSIS	

9113

AT01320	09	A28	14	0	B18	10	LOGIC CHASSIS	
AT01410	07	A28	17	0	A18	13	LOGIC CHASSIS	
AT01420	09	A28	18	0	B18	13	LOGIC CHASSIS	
AT01610	07	A28	25	0	A18	09	LOGIC CHASSIS	
AT01620	09	A28	26	0	B18	09	LOGIC CHASSIS	
AT01710	07	A28	30	0	A19	16	LOGIC CHASSIS	
AT01711	02	A19	16	0	A18	14	LOGIC CHASSIS	
AT01720	08	A28	32	0	B19	16	LOGIC CHASSIS	
AT01721	02	B19	16	0	B18	14	LOGIC CHASSIS	
AT01810	07	A28	36	0	A18	01	LOGIC CHASSIS	
AT01820	08	A28	37	0	B18	01	LOGIC CHASSIS	
AT01910	06	A26	17	0	A18	08	LOGIC CHASSIS	
AT01920	02	A26	18	0	A26	26	LOGIC CHASSIS	
AT02010	08	A26	25	0	B18	08	LOGIC CHASSIS	
AT02020	02	A26	26	0	A26	32	LOGIC CHASSIS	
AT02110	06	A26	30	0	A18	44	LOGIC CHASSIS	
AT02120	02	A26	32	0	A26	37	LOGIC CHASSIS	
AT02210	09	A26	36	0	B18	44	LOGIC CHASSIS	
AT02220	02	A26	37	0	A26	42	LOGIC CHASSIS	
AT02310	02	A28	42	0	A28	50	LOGIC CHASSIS	
AT02310	05	A28	41	0	A22	33	LOGIC CHASSIS	
AT02410	08	A26	41	0	B22	33	LOGIC CHASSIS	
AT02420	02	A26	42	0	A26	50	LOGIC CHASSIS	
AY30110	02	A10	28	0	A10	26	LOGIC CHASSIS	
AY30111	02	A10	26	0	A10	24	LOGIC CHASSIS	
AY30112	04	A10	24	0	A10	08	LOGIC CHASSIS	
AY30113	02	A10	28	0	A10	34	LOGIC CHASSIS	
AY30114	03	A10	34	0	A10	44	LOGIC CHASSIS	
AY32010	03	A09	30	0	A10	18	LOGIC CHASSIS	
AY36010	04	A09	18	0	A11	44	LOGIC CHASSIS	
AY40410	05	A13	10	0	A07	08	LOGIC CHASSIS	
AY51510	03	A08	24	0	A11	20	LOGIC CHASSIS	
AY51511	06	A11	20	0	A18	37	LOGIC CHASSIS	
AY60110	03	A17	10	0	A14	09	LOGIC CHASSIS	
AY60410	04	A08	37	0	A11	40	LOGIC CHASSIS	11332
AY60411	03	A11	40	0	A14	33	LOGIC CHASSIS	11332
BI10010	08	B21	13	0	A25	10	LOGIC CHASSIS	
BI10011	02	B21	13	0	B21	18	LOGIC CHASSIS	NOTE5
BI10020	04	B21	12	0	B25	10	LOGIC CHASSIS	
BI10110	08	B21	16	0	A25	14	LOGIC CHASSIS	
BI10111	02	B21	16	0	B21	17	LOGIC CHASSIS	NOTE5
BI10120	04	B21	08	0	B25	14	LOGIC CHASSIS	
BI10210	08	B21	10	0	A25	20	LOGIC CHASSIS	
BI10211	02	B21	10	0	B21	22	LOGIC CHASSIS	NOTE5
BI10220	04	B21	05	0	B25	20	LOGIC CHASSIS	
BI10310	09	B21	14	0	A27	10	LOGIC CHASSIS	
BI10311	02	B21	14	0	B21	21	LOGIC CHASSIS	NOTE5
BI10320	05	B21	09	0	B27	10	LOGIC CHASSIS	
BI10410	10	B21	33	0	A27	14	LOGIC CHASSIS	
BI10411	02	B21	33	0	B21	41	LOGIC CHASSIS	NOTE5
BI10420	05	B21	32	0	B27	14	LOGIC CHASSIS	
BI10510	09	B21	30	0	A27	20	LOGIC CHASSIS	
BI10511	02	B21	30	0	B21	42	LOGIC CHASSIS	NOTE5
BI10520	05	B21	40	0	B27	20	LOGIC CHASSIS	
BI10610	10	B21	29	0	A29	10	LOGIC CHASSIS	

BI10611	02	B21	29	0	B21	44	LOGIC CHASSIS	NOTE5
BI10620	06	B21	38	0	B29	10	LOGIC CHASSIS	
BI10710	10	B21	36	0	A29	14	LOGIC CHASSIS	
BI10711	02	B21	36	0	B21	45	LOGIC CHASSIS	NOTE5
BI10720	06	B21	37	0	B29	14	LOGIC CHASSIS	
BI10810	04	B21	01	0	B20	25	LOGIC CHASSIS	
BI10910	02	B21	34	0	B19	29	LOGIC CHASSIS	
BI11810	09	B16	44	0	B25	40	LOGIC CHASSIS	
BI11811	05	B16	44	0	B15	02	LOGIC CHASSIS	NOTE5
BI11820	10	B16	45	0	A25	40	LOGIC CHASSIS	
BI12010	04	B16	41	0	B12	28	LOGIC CHASSIS	
BI12110	08	B16	21	0	A25	45	LOGIC CHASSIS	
BI12210	07	B16	42	0	B25	45	LOGIC CHASSIS	
BI12211	04	B16	42	0	B16	02	LOGIC CHASSIS	NOTE5
BI20010	04	B17	21	0	B12	36	LOGIC CHASSIS	
BI20020	09	B17	25	0	A29	45	LOGIC CHASSIS	
BI20110	08	B17	29	0	B29	45	LOGIC CHASSIS	
BI20111	03	B17	29	0	B17	02	LOGIC CHASSIS	NOTE5
BI20120	02	B17	40	0	B17	21	LOGIC CHASSIS	11286
BI21510	03	B18	22	0	B20	25	LOGIC CHASSIS	
BI21710	04	B18	05	0	B19	29	LOGIC CHASSIS	
BI21810	07	B19	08	0	A25	25	LOGIC CHASSIS	
BI22110	08	B19	12	0	A27	25	LOGIC CHASSIS	
BI22310	08	B19	14	0	A29	33	LOGIC CHASSIS	
BI22410	03	B19	18	0	B20	32	LOGIC CHASSIS	
BI22411	02	B19	18	0	B19	02	LOGIC CHASSIS	NOTE5
BI22510	10	B19	40	0	A29	25	LOGIC CHASSIS	
BI22810	11	B19	42	0	A29	20	LOGIC CHASSIS	
BI23010	02	B19	21	0	B18	21	LOGIC CHASSIS	
BI23210	02	B19	34	0	B20	26	LOGIC CHASSIS	
BI23310	05	B20	08	0	B25	25	LOGIC CHASSIS	
BI23410	02	B20	05	0	B19	09	LOGIC CHASSIS	
BI23420	02	B20	01	0	B19	10	LOGIC CHASSIS	
BI23430	02	B20	09	0	B19	05	LOGIC CHASSIS	
BI23440	02	B20	12	0	B19	17	LOGIC CHASSIS	
BI23510	06	B20	10	0	B27	25	LOGIC CHASSIS	
BI23610	07	B20	22	0	B29	33	LOGIC CHASSIS	
BI23710	02	B20	21	0	B19	30	LOGIC CHASSIS	
BI23810	07	B20	13	0	B29	25	LOGIC CHASSIS	
BI23910	04	B20	17	0	B19	37	LOGIC CHASSIS	
BI23920	04	B20	20	0	B19	38	LOGIC CHASSIS	
BI23930	04	B20	14	0	B19	36	LOGIC CHASSIS	
BI23940	04	B20	16	0	B19	41	LOGIC CHASSIS	
BI24010	07	B20	18	0	B29	20	LOGIC CHASSIS	
BI24110	02	B20	29	0	B19	21	LOGIC CHASSIS	
BI24310	03	B20	37	0	B19	26	LOGIC CHASSIS	
BI24410	04	B20	45	0	B19	13	LOGIC CHASSIS	
BI24910	03	B19	24	0	B17	28	LOGIC CHASSIS	11286
BI25010	03	B20	41	0	B17	30	LOGIC CHASSIS	
BI30110	04	B10	09	0	B09	41	LOGIC CHASSIS	
BI30910	02	B10	01	0	B09	05	LOGIC CHASSIS	
BI31310	02	B10	21	0	B11	22	LOGIC CHASSIS	
BI32010	02	B09	21	0	B10	21	LOGIC CHASSIS	
BI32210	03	B09	44	0	B10	25	LOGIC CHASSIS	
BI33010	12	B09	28	0	A27	45	LOGIC CHASSIS	

	BI33020	11	B09	29	0	B27	45	LOGIC CHASSIS
	BI33021	03	B09	29	0	B09	02	LOGIC CHASSIS NOTE5
	BI34510	06	B18	38	0	B09	42	LOGIC CHASSIS
	BI34710	06	B18	16	0	B10	17	LOGIC CHASSIS
	BI34711	03	B10	17	0	B09	25	LOGIC CHASSIS
	BI34910	07	B18	41	0	B09	16	LOGIC CHASSIS
	BI36010	02	B09	01	0	B10	12	LOGIC CHASSIS
	BI36020	02	B09	09	0	B10	05	LOGIC CHASSIS
	BI36030	02	B09	12	0	B10	20	LOGIC CHASSIS
	BI36040	02	B09	17	0	B10	13	LOGIC CHASSIS
	BI36110	03	B09	20	0	B10	29	LOGIC CHASSIS
	BI36120	02	B09	24	0	B10	22	LOGIC CHASSIS
	BI36130	02	B09	32	0	B10	36	LOGIC CHASSIS
	BI36140	02	B09	36	0	B10	33	LOGIC CHASSIS
	BI36210	02	B09	38	0	B10	45	LOGIC CHASSIS
	BI36220	02	B09	45	0	B10	40	LOGIC CHASSIS
	BI36230	04	B09	34	0	B10	14	LOGIC CHASSIS
	BI36810	07	B09	40	0	B19	32	LOGIC CHASSIS 11286
	BI36811	02	B19	32	0	B20	38	LOGIC CHASSIS 11286
	BI36820	03	B09	37	0	B08	25	LOGIC CHASSIS
	BI40010	09	B12	05	0	B25	33	LOGIC CHASSIS
	BI40011	02	B12	05	0	B12	02	LOGIC CHASSIS NOTE5
	BI40020	09	B12	08	0	A25	33	LOGIC CHASSIS
	BI40710	05	B12	36	0	B08	09	LOGIC CHASSIS
	BI40720	03	B12	37	0	B14	29	LOGIC CHASSIS
	BI40730	04	B12	32	0	B07	38	LOGIC CHASSIS
	BI40910	03	B13	21	0	B12	10	LOGIC CHASSIS
	BI40911	04	B12	10	0	B08	20	LOGIC CHASSIS
13	BI41010	05	B12	09	0	B08	21	LOGIC CHASSIS
	BI41011	03	B12	09	0	B13	24	LOGIC CHASSIS
	BI41210	05	B11	08	0	B12	40	LOGIC CHASSIS
	BI41211	04	B12	40	0	B13	13	LOGIC CHASSIS
	BI41220	05	B11	05	0	B12	41	LOGIC CHASSIS
	BI41221	04	B12	41	0	B13	17	LOGIC CHASSIS
	BI41310	04	B11	01	0	B12	34	LOGIC CHASSIS
	BI41510	04	B11	12	0	B12	38	LOGIC CHASSIS
	BI41511	04	B12	38	0	B13	09	LOGIC CHASSIS
	BI41710	04	B13	45	0	B11	17	LOGIC CHASSIS
	BI41810	03	B13	41	0	B11	29	LOGIC CHASSIS
	BI42210	03	B12	20	0	B13	08	LOGIC CHASSIS
	BI42220	04	B12	21	0	B13	01	LOGIC CHASSIS
	BI42230	02	B12	22	0	B13	18	LOGIC CHASSIS
	BI42710	04	B13	42	0	B11	13	LOGIC CHASSIS
	BI50910	04	B08	16	0	B12	17	LOGIC CHASSIS
	BI50920	04	B08	18	0	B12	12	LOGIC CHASSIS
	BI50930	02	B08	17	0	B09	14	LOGIC CHASSIS
	BI51310	05	B11	41	0	B07	09	LOGIC CHASSIS
12	BI51410	04	B11	21	0	B07	25	LOGIC CHASSIS
11	BI52010	06	B07	20	0	B14	38	LOGIC CHASSIS
10	BI52020	07	B07	14	0	B17	14	LOGIC CHASSIS
9	BI52030	03	B07	21	0	B08	09	LOGIC CHASSIS
8	BI52110	04	B11	36	0	B08	13	LOGIC CHASSIS
7	BI52210	04	B07	24	0	B11	32	LOGIC CHASSIS
6	BI52220	03	B07	32	0	B08	25	LOGIC CHASSIS
5	BI52230	03	B07	30	0	B08	16	LOGIC CHASSIS
4								
3								

BI52310	06	B08	29	0	B17	12	LOGIC CHASSIS	
BI52320	12	B08	28	0	A27	40	LOGIC CHASSIS	
BI52330	11	B08	30	0	B27	40	LOGIC CHASSIS	
BI52331	03	B08	30	0	B08	50	LOGIC CHASSIS	NOTE5
BI52340	07	B08	32	0	B17	13	LOGIC CHASSIS	
BI60010	12	B08	41	0	A27	33	LOGIC CHASSIS	
BI60020	11	B08	44	0	B27	33	LOGIC CHASSIS	
BI60021	05	B08	44	0	B07	02	LOGIC CHASSIS	NOTE5
BI60210	06	B15	01	0	B08	33	LOGIC CHASSIS	
BI60610	05	B15	26	0	B08	40	LOGIC CHASSIS	
BI61210	05	B17	22	0	B11	36	LOGIC CHASSIS	
BI62210	05	B14	05	0	B11	44	LOGIC CHASSIS	
BI62310	02	B14	13	0	B15	05	LOGIC CHASSIS	
BI62410	02	B14	16	0	B15	10	LOGIC CHASSIS	
BI62510	02	B14	12	0	B15	18	LOGIC CHASSIS	
BI63810	06	B09	40	0	B17	30	LOGIC CHASSIS	NOTE5
BK10010	04	B16	33	0	B21	18	LOGIC CHASSIS	
BK10210	04	B16	25	0	B21	17	LOGIC CHASSIS	
BK10410	04	B16	22	0	B21	22	LOGIC CHASSIS	
BK10610	05	B16	12	0	B21	21	LOGIC CHASSIS	
BK10810	04	B16	37	0	B21	41	LOGIC CHASSIS	
BK11010	04	B16	29	0	B21	42	LOGIC CHASSIS	
BK11210	05	B16	18	0	B21	44	LOGIC CHASSIS	
BK11410	06	B16	08	0	B21	45	LOGIC CHASSIS	
BK20210	03	B19	28	0	B20	44	LOGIC CHASSIS	
BK20310	08	B19	22	0	A29	40	LOGIC CHASSIS	
BK20510	06	B20	40	0	B29	40	LOGIC CHASSIS	
BK30010	04	B09	10	0	B13	32	LOGIC CHASSIS	
BK30210	04	B09	08	0	B13	20	LOGIC CHASSIS	
BK30410	03	B09	14	0	B13	12	LOGIC CHASSIS	
BK30610	05	B09	33	0	B13	05	LOGIC CHASSIS	
BK30810	04	B09	22	0	B12	25	LOGIC CHASSIS	
BK35010	03	B09	13	0	B10	32	LOGIC CHASSIS	
BK40010	03	B13	32	0	B14	13	LOGIC CHASSIS	
BK40210	02	B13	20	0	B14	12	LOGIC CHASSIS	
BK40410	02	B13	12	0	B15	08	LOGIC CHASSIS	
BK40610	05	B13	05	0	B15	41	LOGIC CHASSIS	
BK40620	03	B13	30	0	B12	13	LOGIC CHASSIS	
BK40710	03	B13	40	0	B12	26	LOGIC CHASSIS	
BK40810	03	B12	25	0	B14	16	LOGIC CHASSIS	
BK41010	04	B12	17	0	B16	29	LOGIC CHASSIS	
BK41210	04	B12	12	0	B14	28	LOGIC CHASSIS	
BK41410	04	B12	01	0	B16	08	LOGIC CHASSIS	
BK50010	03	B14	28	0	B16	18	LOGIC CHASSIS	
BK50020	05	B14	25	0	B08	14	LOGIC CHASSIS	
BK50030	06	B14	14	0	B08	12	LOGIC CHASSIS	
BK50210	04	B07	10	0	B11	16	LOGIC CHASSIS	
BK50211	04	B11	16	0	B13	34	LOGIC CHASSIS	
BK50212	04	B13	34	0	B11	42	LOGIC CHASSIS	21103
BK50310	02	B07	12	0	B08	05	LOGIC CHASSIS	
BK50311	05	B08	05	0	B13	28	LOGIC CHASSIS	
BK50610	04	B07	26	0	B11	14	LOGIC CHASSIS	
BK50620	04	B07	33	0	B08	13	LOGIC CHASSIS	
BK50710	05	B07	36	0	B11	09	LOGIC CHASSIS	
BK50810	05	B07	42	0	B11	13	LOGIC CHASSIS	

	BK50910	05	B07	40	0	B11	10	LOGIC CHASSIS
	BK51110	02	B11	32	0	B12	37	LOGIC CHASSIS
	BK51120	03	B11	37	0	B11	50	LOGIC CHASSIS 21103
	BK60010	04	B15	05	0	B16	33	LOGIC CHASSIS
	BK60210	02	B15	18	0	B16	25	LOGIC CHASSIS
	BK60410	03	B15	08	0	B16	22	LOGIC CHASSIS
	BK60610	04	B15	41	0	B16	12	LOGIC CHASSIS
	BK60810	04	B15	10	0	B16	37	LOGIC CHASSIS
	BK61010	03	B17	36	0	B14	21	LOGIC CHASSIS
	BK61210	05	B17	37	0	B11	33	LOGIC CHASSIS
	BK61410	04	B17	17	0	B14	24	LOGIC CHASSIS
	BK61810	04	B17	24	0	B14	10	LOGIC CHASSIS
	BK62010	04	B17	01	0	B14	17	LOGIC CHASSIS
	BT00010	08	B24	01	0	A16	36	LOGIC CHASSIS
	BT00020	07	B24	05	0	B16	36	LOGIC CHASSIS
	BT00110	08	B24	12	0	A16	28	LOGIC CHASSIS
	BT00120	06	B24	14	0	B16	28	LOGIC CHASSIS
	BT00210	09	B24	17	0	A16	17	LOGIC CHASSIS
	BT00220	06	B24	18	0	B16	17	LOGIC CHASSIS
	BT00310	10	B24	25	0	A16	10	LOGIC CHASSIS
	BT00320	06	B24	26	0	B16	10	LOGIC CHASSIS
	BT00410	08	B24	30	0	A16	40	LOGIC CHASSIS
	BT00420	06	B24	32	0	B16	40	LOGIC CHASSIS
	BT00510	09	B24	36	0	A16	32	LOGIC CHASSIS
	BT00520	06	B24	37	0	B16	32	LOGIC CHASSIS
	BT00610	11	B24	41	0	A16	13	LOGIC CHASSIS
	BT00620	06	B24	42	0	B16	13	LOGIC CHASSIS
	BT00710	09	B26	01	0	A16	01	LOGIC CHASSIS
9113	BT00720	06	B26	05	0	B16	01	LOGIC CHASSIS
	BT00810	08	B26	12	0	A19	25	LOGIC CHASSIS
	BT00811	03	B26	12	0	B26	02	LOGIC CHASSIS NOTE5
	BT00820	05	B26	14	0	B19	25	LOGIC CHASSIS
	BT00821	04	B26	14	0	B25	02	LOGIC CHASSIS NOTE5
	BT01210	08	B28	01	0	A18	32	LOGIC CHASSIS
	BT01220	07	B28	05	0	B18	32	LOGIC CHASSIS
	BT01310	09	B28	12	0	A18	29	LOGIC CHASSIS
	BT01320	07	B28	14	0	B18	29	LOGIC CHASSIS
	BT01410	09	B28	17	0	A18	26	LOGIC CHASSIS
	BT01420	07	B28	18	0	B18	26	LOGIC CHASSIS
	BT01610	10	B28	25	0	A18	30	LOGIC CHASSIS
	BT01620	07	B28	26	0	B18	30	LOGIC CHASSIS
	BT01710	10	B28	30	0	A20	24	LOGIC CHASSIS
	BT01711	04	A20	24	0	A18	33	LOGIC CHASSIS
	BT01720	06	B28	32	0	B20	24	LOGIC CHASSIS
	BT01721	03	B20	24	0	B18	33	LOGIC CHASSIS
	BT01810	10	B28	36	0	A18	34	LOGIC CHASSIS
	BT01820	07	B28	37	0	B18	34	LOGIC CHASSIS
12	BT01910	09	B26	17	0	A18	25	LOGIC CHASSIS
11	BT01920	02	B26	18	0	B26	26	LOGIC CHASSIS
10	BT02010	06	B26	25	0	B18	25	LOGIC CHASSIS
9	BT02020	02	B26	26	0	B26	32	LOGIC CHASSIS
8	BT02110	09	B26	30	0	A20	33	LOGIC CHASSIS
7	BT02111	02	A20	33	0	A18	45	LOGIC CHASSIS
6	BT02120	02	B26	32	0	B26	37	LOGIC CHASSIS
5	BT02210	05	B26	36	0	B20	33	LOGIC CHASSIS
4								
3								

BT02211	02	B20	33	0	B18	45	LOGIC CHASSIS	
BT02220	02	B26	37	0	B26	42	LOGIC CHASSIS	
BT02310	10	B28	41	0	A22	21	LOGIC CHASSIS	
BT02320	02	B28	42	0	B28	50	LOGIC CHASSIS	
BT02410	05	B26	41	0	B22	21	LOGIC CHASSIS	
BT02420	02	B26	42	0	B26	50	LOGIC CHASSIS	
BY30110	02	B10	28	0	B10	26	LOGIC CHASSIS	
BY30111	02	B10	26	0	B10	24	LOGIC CHASSIS	
BY30112	04	B10	24	0	B10	08	LOGIC CHASSIS	
BY30113	02	B10	28	0	B10	34	LOGIC CHASSIS	
BY30114	02	B10	34	0	B10	44	LOGIC CHASSIS	
BY32010	03	B09	30	0	B10	18	LOGIC CHASSIS	
BY36010	04	B09	18	0	B11	44	LOGIC CHASSIS	
BY40410	05	B13	10	0	B07	08	LOGIC CHASSIS	
BY51510	03	B08	24	0	B11	20	LOGIC CHASSIS	
BY51511	06	B11	20	0	B18	37	LOGIC CHASSIS	
BY60110	03	B17	10	0	B14	09	LOGIC CHASSIS	
BY60410	03	B08	37	0	B11	40	LOGIC CHASSIS	11332
BY60411	03	B11	40	0	B14	33	LOGIC CHASSIS	11332
0100110	05	A18	21	0	114	44	LOGIC CHASSIS	
0100210	02	A18	24	0	A17	22	LOGIC CHASSIS	
0100310	02	A18	18	0	A17	20	LOGIC CHASSIS	
0100410	03	A18	20	0	A17	37	LOGIC CHASSIS	
0100510	04	A18	17	0	A14	05	LOGIC CHASSIS	
0100610	03	A18	40	0	A19	30	LOGIC CHASSIS	
0100710	05	B18	21	0	B14	44	LOGIC CHASSIS	
0100810	02	B18	24	0	B17	22	LOGIC CHASSIS	
0100910	02	B18	18	0	B17	20	LOGIC CHASSIS	
9113 0101010	03	B18	20	0	B17	37	LOGIC CHASSIS	
0101110	04	B18	17	0	B14	05	LOGIC CHASSIS	
0101210	03	B18	40	0	B19	30	LOGIC CHASSIS	
0200110	02	A25	01	0	A24	08	LOGIC CHASSIS	
0200210	02	A25	05	0	A24	09	LOGIC CHASSIS	
0200310	02	A25	09	0	A24	13	LOGIC CHASSIS	
0200410	02	A25	12	0	A24	16	LOGIC CHASSIS	
0200510	02	A25	16	0	A24	21	LOGIC CHASSIS	
0200610	02	A25	17	0	A24	24	LOGIC CHASSIS	
0200710	05	A25	26	0	A19	44	LOGIC CHASSIS	
0200810	09	A25	34	0	B19	44	LOGIC CHASSIS	
0200910	04	A26	21	0	A30	12	LOGIC CHASSIS	
0201010	04	A26	24	0	A30	14	LOGIC CHASSIS	
0201110	04	A26	28	0	A30	13	LOGIC CHASSIS	
0201210	04	A26	29	0	A30	16	LOGIC CHASSIS	
0201310	04	A26	33	0	A30	17	LOGIC CHASSIS	
0201410	04	A26	34	0	A30	18	LOGIC CHASSIS	
0201510	05	A26	38	0	A30	20	LOGIC CHASSIS	
0201610	05	A26	40	0	A30	22	LOGIC CHASSIS	
12 0201710	05	A26	44	0	A30	09	LOGIC CHASSIS	
11 0201810	05	A26	45	0	A30	10	LOGIC CHASSIS	
10 0201910	06	A27	26	0	A19	44	LOGIC CHASSIS	
9 0202010	09	A27	34	0	B19	44	LOGIC CHASSIS	
8 0202110	04	A27	01	0	A24	28	LOGIC CHASSIS	
7 0202210	04	A27	05	0	A24	29	LOGIC CHASSIS	
6 0202310	04	A27	09	0	A24	33	LOGIC CHASSIS	
5 0202410	04	A27	12	0	A24	34	LOGIC CHASSIS	
4								
3								

	0202510	04	A27	16	0	A24	38	LOGIC CHASSIS	
	0202610	04	A27	17	0	A24	40	LOGIC CHASSIS	
	0202710	05	A28	44	0	A30	05	LOGIC CHASSIS	
	0202810	05	A28	45	0	A30	08	LOGIC CHASSIS	
	0202910	06	A29	01	0	A24	44	LOGIC CHASSIS	
	0203010	06	A29	05	0	A24	45	LOGIC CHASSIS	
	0203110	04	A29	09	0	A26	08	LOGIC CHASSIS	
	0203210	03	A29	12	0	A26	09	LOGIC CHASSIS	
	0203310	02	B25	01	0	B24	08	LOGIC CHASSIS	
	0203410	02	B25	05	0	B24	09	LOGIC CHASSIS	
	0203510	02	B25	09	0	B24	13	LOGIC CHASSIS	
	0203610	02	B25	12	0	B24	16	LOGIC CHASSIS	
	0203710	02	B25	16	0	B24	21	LOGIC CHASSIS	
	0203810	02	B25	17	0	B24	24	LOGIC CHASSIS	
	0203910	08	B25	26	0	A20	36	LOGIC CHASSIS	
	0204010	04	B25	34	0	B20	36	LOGIC CHASSIS	
	0204110	04	B27	01	0	B24	28	LOGIC CHASSIS	
	0204210	04	B27	05	0	B24	29	LOGIC CHASSIS	
	0204310	04	B27	09	0	B24	33	LOGIC CHASSIS	
	0204410	04	B27	12	0	B24	34	LOGIC CHASSIS	
	0204510	04	B27	16	0	B24	38	LOGIC CHASSIS	
	0204610	04	B27	17	0	B24	40	LOGIC CHASSIS	
	0204710	08	B27	26	0	A20	36	LOGIC CHASSIS	
	0204810	05	B27	34	0	B20	36	LOGIC CHASSIS	
	0204910	04	B26	21	0	B30	12	LOGIC CHASSIS	
	0205010	04	B26	24	0	B30	14	LOGIC CHASSIS	
	0205110	04	B26	28	0	B30	13	LOGIC CHASSIS	
	0205210	04	B26	29	0	B30	16	LOGIC CHASSIS	
9113	0205310	04	B26	33	0	B30	17	LOGIC CHASSIS	
	0205410	04	B26	34	0	B30	18	LOGIC CHASSIS	
	0205510	05	B26	38	0	B30	20	LOGIC CHASSIS	
	0205610	05	B26	40	0	B30	22	LOGIC CHASSIS	
	0205710	05	B26	44	0	B30	09	LOGIC CHASSIS	
	0205810	05	B26	45	0	B30	10	LOGIC CHASSIS	
	0205910	05	B28	44	0	B30	05	LOGIC CHASSIS	
	0206010	05	B28	45	0	B30	08	LOGIC CHASSIS	
	0206110	06	B29	01	0	B24	44	LOGIC CHASSIS	
	0206210	06	B29	05	0	B24	45	LOGIC CHASSIS	
	0206310	03	B29	09	0	B26	08	LOGIC CHASSIS	
	0206410	03	B29	12	0	B26	09	LOGIC CHASSIS	
	0206510	06	A22	13	0	A14	18	LOGIC CHASSIS	
	0206610	03	A22	25	0	A21	34	LOGIC CHASSIS	
	0206710	03	A22	18	0	A21	01	LOGIC CHASSIS	
	0206810	06	B22	13	0	B14	18	LOGIC CHASSIS	
	0206910	03	B22	25	0	B21	34	LOGIC CHASSIS	
	0207010	04	B22	18	0	B21	01	LOGIC CHASSIS	
	0207110	04	A14	26	0	A17	16	LOGIC CHASSIS	
12	0207210	04	B14	26	0	B17	16	LOGIC CHASSIS	
11	0300110		IJ200	01	X	A25	01	LOGIC CHASSIS	000
10	0300210		IJ200	04	X	A25	05	LOGIC CHASSIS	444
9	0300310		IJ200	02	X	A25	09	LOGIC CHASSIS	000
8	0300410		IJ200	05	X	A25	12	LOGIC CHASSIS	444
7	0300510		IJ200	03	X	A25	16	LOGIC CHASSIS	000
6	0300610		IJ200	07	X	A25	17	LOGIC CHASSIS	444
5	0300710		IJ200	08	X	A27	01	LOGIC CHASSIS	000
4									
3									

	0300810	IJ200 12 X	A27	05	LOGIC CHASSIS	444	
	0300910	IJ200 10 X	A27	09	LOGIC CHASSIS	000	
	0301010	IJ200 13 X	A27	12	LOGIC CHASSIS	444	
	0301110	IJ200 11 X	A27	16	LOGIC CHASSIS	000	
	0301210	IJ200 14 X	A27	17	LOGIC CHASSIS	444	
	0301310	IJ200 15 X	A29	01	LOGIC CHASSIS	000	
	0301410	IJ200 18 X	A29	05	LOGIC CHASSIS	444	
	0301510	IJ200 16 X	A29	09	LOGIC CHASSIS	000	
	0301610	IJ200 20 X	A29	12	LOGIC CHASSIS	444	
	0301710	IJ200 17 X	A25	36	LOGIC CHASSIS	000	
	0301810	IJ200 21 X	A25	37	LOGIC CHASSIS	444	
	0301910	IJ200 22 X	A27	28	LOGIC CHASSIS	000	
	0302010	IJ200 25 X	A27	29	LOGIC CHASSIS	444	
	0302110	IJ200 23 X	A25	28	LOGIC CHASSIS	000	
	0302210	IJ200 26 X	A25	29	LOGIC CHASSIS	444	
	0302310	IJ200 24 X	A27	36	LOGIC CHASSIS	000	
	0302410	IJ200 27 X	A27	37	LOGIC CHASSIS	444	
	0302510	IJ200 28 X	A25	41	LOGIC CHASSIS	000	
	0302610	IJ200 31 X	A25	42	LOGIC CHASSIS	444	
	0302710	IJ200 29 X	A27	41	LOGIC CHASSIS	000	
	0302810	IJ200 32 X	A27	42	LOGIC CHASSIS	444	
	0302910	IJ200 30 X	A28	21	LOGIC CHASSIS	000	
	0303010	IJ200 33 X	A28	24	LOGIC CHASSIS	444	
	0303110	IJ200 34 X	A28	08	LOGIC CHASSIS	000	
	0303210	IJ200 37 X	A28	09	LOGIC CHASSIS	444	
	0303310	IJ200 35 X	A28	13	LOGIC CHASSIS	000	
	0303410	IJ200 38 X	A28	16	LOGIC CHASSIS	444	
	0303510	IJ200 40 X	A25	21	LOGIC CHASSIS	000	
9113	0303610	IJ200 43 X	A25	22	LOGIC CHASSIS	444	
	0303710	IJ200 41 X	A27	21	LOGIC CHASSIS	000	
	0303810	IJ200 44 X	A27	22	LOGIC CHASSIS	444	
	0303910	IJ200 42 X	A29	21	LOGIC CHASSIS	000	
	0304010	IJ200 45 X	A29	22	LOGIC CHASSIS	444	
	0304110	IJ200 46 X	A29	16	LOGIC CHASSIS	000	
	0304210	IJ200 49 X	A29	17	LOGIC CHASSIS	444	
	0304310	IJ200 47 X	A29	28	LOGIC CHASSIS	000	
	0304410	IJ200 50 X	A29	29	LOGIC CHASSIS	444	
	0304510	IJ200 58 X	A28	28	LOGIC CHASSIS	000	
	0304610	IJ200 62 X	A28	29	LOGIC CHASSIS	444	
	0304710	IJ200 59 X	A28	33	LOGIC CHASSIS	000	
	0304810	IJ200 63 X	A28	34	LOGIC CHASSIS	444	
	0304910	IJ200 60 X	A28	38	LOGIC CHASSIS	000	
	0305010	IJ200 64 X	A28	40	LOGIC CHASSIS	444	
	0305110	IJ200 65 X	A29	36	LOGIC CHASSIS	000	
	0305210	IJ200 70 X	A29	37	LOGIC CHASSIS	444	
	0305310	IJ200 66 X	A26	13	LOGIC CHASSIS	000	
	0305410	IJ200 71 X	A26	16	LOGIC CHASSIS	444	
12	0305510	IJ200 67 X	A29	41	LOGIC CHASSIS	000	
11	0305610	IJ200 72 X	A29	42	LOGIC CHASSIS	444	
10	0305710	IJ200 48 X	IJ201 48		LOGIC CHASSIS	000	11446
9	0305810	IJ200 51 X	IJ201 51		LOGIC CHASSIS	444	11446
8	0305910	IJ200 52 X	IJ201 52		LOGIC CHASSIS	000	11446
7	0306010	IJ200 55 X	IJ201 55		LOGIC CHASSIS	444	11446
6	0306110	IJ200 73 X	IJ201 73		LOGIC CHASSIS	000	11446
5	0306210	IJ200 76 X	IJ201 76		LOGIC CHASSIS	444	11446
4							
3							

0400110	IJ201	01	X	A24	08	LOGIC CHASSIS 000
0400210	IJ201	04	X	A24	09	LOGIC CHASSIS 444
0400310	IJ201	02	X	A24	13	LOGIC CHASSIS 000
0400410	IJ201	05	X	A24	16	LOGIC CHASSIS 444
0400510	IJ201	03	X	A24	21	LOGIC CHASSIS 000
0400610	IJ201	07	X	A24	24	LOGIC CHASSIS 444
0400710	IJ201	08	X	A24	28	LOGIC CHASSIS 000
0400810	IJ201	12	X	A24	29	LOGIC CHASSIS 444
0400910	IJ201	10	X	A24	33	LOGIC CHASSIS 000
0401010	IJ201	13	X	A24	34	LOGIC CHASSIS 444
0401110	IJ201	11	X	A24	38	LOGIC CHASSIS 000
0401210	IJ201	14	X	A24	40	LOGIC CHASSIS 444
0401310	IJ201	15	X	A24	44	LOGIC CHASSIS 000
0401410	IJ201	18	X	A24	45	LOGIC CHASSIS 444
0401510	IJ201	16	X	A26	08	LOGIC CHASSIS 000
0401610	IJ201	20	X	A26	09	LOGIC CHASSIS 444
0401710	IJ201	17	X	A25	36	LOGIC CHASSIS 000
0401810	IJ201	21	X	A25	37	LOGIC CHASSIS 444
0401910	IJ201	22	X	A27	28	LOGIC CHASSIS 000
0402010	IJ201	25	X	A27	29	LOGIC CHASSIS 444
0402110	IJ201	23	X	A25	28	LOGIC CHASSIS 000
0402210	IJ201	26	X	A25	29	LOGIC CHASSIS 444
0402310	IJ201	24	X	A27	36	LOGIC CHASSIS 000
0402410	IJ201	27	X	A27	37	LOGIC CHASSIS 444
0402510	IJ201	28	X	A25	41	LOGIC CHASSIS 000
0402610	IJ201	31	X	A25	42	LOGIC CHASSIS 444
0402710	IJ201	29	X	A27	41	LOGIC CHASSIS 000
0402810	IJ201	32	X	A27	42	LOGIC CHASSIS 444
0402910	IJ201	30	X	A28	21	LOGIC CHASSIS 000
0403010	IJ201	33	X	A28	24	LOGIC CHASSIS 444
0403110	IJ201	34	X	A28	08	LOGIC CHASSIS 000
0403210	IJ201	37	X	A28	09	LOGIC CHASSIS 444
0403310	IJ201	35	X	A28	13	LOGIC CHASSIS 000
0403410	IJ201	38	X	A28	16	LOGIC CHASSIS 444
0403510	IJ201	40	X	A25	21	LOGIC CHASSIS 000
0403610	IJ201	43	X	A25	22	LOGIC CHASSIS 444
0403710	IJ201	41	X	A27	21	LOGIC CHASSIS 000
0403810	IJ201	44	X	A27	22	LOGIC CHASSIS 444
0403910	IJ201	42	X	A29	21	LOGIC CHASSIS 000
0404010	IJ201	45	X	A29	22	LOGIC CHASSIS 444
0404110	IJ201	46	X	A29	16	LOGIC CHASSIS 000
0404210	IJ201	49	X	A29	17	LOGIC CHASSIS 444
0404310	IJ201	47	X	A29	28	LOGIC CHASSIS 000
0404410	IJ201	50	X	A29	29	LOGIC CHASSIS 444
0404510	IJ201	58	X	A28	28	LOGIC CHASSIS 000
0404610	IJ201	62	X	A28	29	LOGIC CHASSIS 444
0404710	IJ201	59	X	A28	33	LOGIC CHASSIS 000
0404810	IJ201	63	X	A28	34	LOGIC CHASSIS 444
0404910	IJ201	60	X	A28	38	LOGIC CHASSIS 000
0405010	IJ201	64	X	A28	40	LOGIC CHASSIS 444
0405110	IJ201	65	X	A29	36	LOGIC CHASSIS 000
0405210	IJ201	70	X	A29	37	LOGIC CHASSIS 444
0405310	IJ201	66	X	A26	13	LOGIC CHASSIS 000
0405410	IJ201	71	X	A26	16	LOGIC CHASSIS 444
0405510	IJ201	67	X	A29	41	LOGIC CHASSIS 000

0405610	IJ201 72 X	A29	42	LOGIC CHASSIS	444	
0500110	IJ202 B X	A26	21	LOGIC CHASSIS	000	
0500210	IJ202 D X	A26	24	LOGIC CHASSIS	444	
0500310	IJ202 BB X	A26	28	LOGIC CHASSIS	000	
0500410	IJ202 DD X	A26	29	LOGIC CHASSIS	444	
0500510	IJ202 E X	A26	33	LOGIC CHASSIS	000	
0500610	IJ202 H X	A26	34	LOGIC CHASSIS	444	
0500710	IJ202 EE X	A26	38	LOGIC CHASSIS	000	
0500810	IJ202 HH X	A26	40	LOGIC CHASSIS	444	
0500910	IJ202 F X	A28	44	LOGIC CHASSIS	000	
0501010	IJ202 J X	A28	45	LOGIC CHASSIS	444	
0501110	IJ202 FF X	A26	44	LOGIC CHASSIS	000	
0501210	IJ202 JJ X	A26	45	LOGIC CHASSIS	444	
0600110	IIJ20001 X	B25	01	LOGIC CHASSIS	000	
0600210	IIJ20004 X	B25	05	LOGIC CHASSIS	444	
0600310	IIJ20002 X	B25	09	LOGIC CHASSIS	000	
0600410	IIJ20005 X	B25	12	LOGIC CHASSIS	444	
0600510	IIJ20003 X	B25	16	9LOGIC CHASSIS	000	
0600610	IIJ20007 X	B25	17	LOGIC CHASSIS	444	
0600710	IIJ20008 X	B27	01	LOGIC CHASSIS	000	
0600810	IIJ20012 X	B27	05	LOGIC CHASSIS	444	
0600910	IIJ20010 X	B27	09	LOGIC CHASSIS	000	
0601010	IIJ20013 X	B27	12	LOGIC CHASSIS	444	
0601110	IIJ20011 X	B27	16	LOGIC CHASSIS	000	
0601210	IIJ20014 X	B27	17	LOGIC CHASSIS	444	
0601310	IIJ20015 X	B29	01	LOGIC CHASSIS	000	
0601410	IIJ20018 X	B29	05	LOGIC CHASSIS	444	
0601510	IIJ20016 X	B29	09	LOGIC CHASSIS	000	
9113 0601610	IIJ20020 X	B29	12	LOGIC CHASSIS	444	
0601710	IIJ20017 X	B25	36	LOGIC CHASSIS	000	
0601810	IIJ20021 X	B25	37	LOGIC CHASSIS	444	
0601910	IIJ20022 X	B27	28	LOGIC CHASSIS	000	
0602010	IIJ20025 X	B27	29	LOGIC CHASSIS	444	
0602110	IIJ20023 X	B25	28	LOGIC CHASSIS	000	
0602210	IIJ20026 X	B25	29	LOGIC CHASSIS	444	
0602310	IIJ20024 X	B27	36	LOGIC CHASSIS	000	
0602410	IIJ20027 X	B27	37	LOGIC CHASSIS	444	
0602510	IIJ20028 X	B25	41	LOGIC CHASSIS	000	
0602610	IIJ20031 X	B25	42	LOGIC CHASSIS	444	
0602710	IIJ20029 X	B27	41	LOGIC CHASSIS	000	
0602810	IIJ20032 X	B27	42	LOGIC CHASSIS	444	
0602910	IIJ20030 X	B28	21	LOGIC CHASSIS	000	
0603010	IIJ20033 X	B28	24	LOGIC CHASSIS	444	
0603110	IIJ20034 X	B28	08	LOGIC CHASSIS	000	
0603210	IIJ20037 X	B28	09	LOGIC CHASSIS	444	
0603310	IIJ20035 X	B28	13	LOGIC CHASSIS	000	
0603410	IIJ20038 X	B28	16	LOGIC CHASSIS	444	
12 0603510	IIJ20040 X	B25	21	LOGIC CHASSIS	000	
11 0603610	IIJ20043 X	B25	22	LOGIC CHASSIS	444	
10 0603710	IIJ20041 X	B27	21	LOGIC CHASSIS	000	
9 0603810	IIJ20044 X	B27	22	LOGIC CHASSIS	444	
8 0603910	IIJ20042 X	B29	21	LOGIC CHASSIS	000	
7 0604010	IIJ20045 X	B29	22	LOGIC CHASSIS	444	
6 0604110	IIJ20046 X	B29	16	LOGIC CHASSIS	000	
5 0604210	IIJ20049 X	B29	17	LOGIC CHASSIS	444	
4						
3						

0604310	IIJ20047	X	B29	28	LOGIC CHASSIS	000	
0604410	IIJ20050	X	B29	29	LOGIC CHASSIS	444	
0604510	IIJ20058	X	B28	28	LOGIC CHASSIS	000	
0604610	IIJ20062	X	B28	29	LOGIC CHASSIS	444	
0604710	IIJ20059	X	B28	33	LOGIC CHASSIS	000	
0604810	IIJ20063	X	B28	34	LOGIC CHASSIS	444	
0604910	IIJ20060	X	B28	38	LOGIC CHASSIS	000	
0605010	IIJ20064	X	B28	40	LOGIC CHASSIS	444	
0605110	IIJ20065	X	B29	36	LOGIC CHASSIS	000	
0605210	IIJ20070	X	B29	37	LOGIC CHASSIS	444	
0605310	IIJ20066	X	B26	13	LOGIC CHASSIS	000	
0605410	IIJ20071	X	B26	16	LOGIC CHASSIS	444	
0605510	IIJ20067	X	B29	41	LOGIC CHASSIS	000	
0605610	IIJ20072	X	B29	42	LOGIC CHASSIS	444	
0605710	IIJ20048	X	IIJ20148		LOGIC CHASSIS	000	11446
0605810	IIJ20051	X	IIJ20151		LOGIC CHASSIS	444	11446
0605910	IIJ20052	X	IIJ20152		LOGIC CHASSIS	000	11446
0606010	IIJ20055	X	IIJ20155		LOGIC CHASSIS	444	11446
0606110	IIJ20073	X	IIJ20173		LOGIC CHASSIS	000	11446
0606210	IIJ20076	X	IIJ20176		LOGIC CHASSIS	444	11446
0700110	IIJ20101	X	B24	08	LOGIC CHASSIS	000	
0700210	IIJ20104	X	B24	09	LOGIC CHASSIS	444	
0700310	IIJ20102	X	B24	13	LOGIC CHASSIS	000	
0700410	IIJ20105	X	B24	16	LOGIC CHASSIS	444	
0700510	IIJ20103	X	B24	21	LOGIC CHASSIS	000	
0700610	IIJ20107	X	B24	24	LOGIC CHASSIS	444	
0700710	IIJ20108	X	B24	28	LOGIC CHASSIS	000	
0700810	IIJ20112	X	B24	29	LOGIC CHASSIS	444	
0700910	IIJ20110	X	B24	33	LOGIC CHASSIS	000	
0701010	IIJ20113	X	B24	34	LOGIC CHASSIS	444	
0701110	IIJ20111	X	B24	38	LOGIC CHASSIS	000	
0701210	IIJ20114	X	B24	40	LOGIC CHASSIS	444	
0701310	IIJ20115	X	B24	44	LOGIC CHASSIS	000	
0701410	IIJ20118	X	B24	45	LOGIC CHASSIS	444	
0701510	IIJ20116	X	B26	08	LOGIC CHASSIS	000	
0701610	IIJ20120	X	B26	09	LOGIC CHASSIS	444	
0701710	IIJ20117	X	B25	36	LOGIC CHASSIS	000	
0701810	IIJ20121	X	B25	37	LOGIC CHASSIS	444	
0701910	IIJ20122	X	B27	28	LOGIC CHASSIS	000	
0702010	IIJ20125	X	B27	29	LOGIC CHASSIS	444	
0702110	IIJ20123	X	B25	28	LOGIC CHASSIS	000	
0702210	IIJ20126	X	B25	29	LOGIC CHASSIS	444	
0702310	IIJ20124	X	B27	36	LOGIC CHASSIS	000	
0702410	IIJ20127	X	B27	37	LOGIC CHASSIS	444	
0702510	IIJ20128	X	B25	41	LOGIC CHASSIS	000	
0702610	IIJ20131	X	B25	42	LOGIC CHASSIS	444	
0702710	IIJ20129	X	B27	41	LOGIC CHASSIS	000	
0702810	IIJ20132	X	B27	42	LOGIC CHASSIS	444	
0702910	IIJ20130	X	B28	21	LOGIC CHASSIS	000	
0703010	IIJ20133	X	B28	24	LOGIC CHASSIS	444	
0703110	IIJ20134	X	B28	08	LOGIC CHASSIS	000	
0703210	IIJ20137	X	B28	09	LOGIC CHASSIS	444	
0703310	IIJ20135	X	B28	13	LOGIC CHASSIS	000	
0703410	IIJ20138	X	B28	16	LOGIC CHASSIS	444	
0703510	IIJ20140	X	B25	21	LOGIC CHASSIS	000	

0703610		IIJ20143	X	B25	22	LOGIC CHASSIS		444
0703710		IIJ20141	X	B27	21	LOGIC CHASSIS		000
0703810		IIJ20144	X	B27	22	LOGIC CHASSIS		444
0703910		IIJ20142	X	B29	21	LOGIC CHASSIS		000
0704010		IIJ20145	X	B29	22	LOGIC CHASSIS		444
0704110		IIJ20146	X	B29	16	LOGIC CHASSIS		000
0704210		IIJ20149	X	B29	17	LOGIC CHASSIS		444
0704310		IIJ20147	X	B29	28	LOGIC CHASSIS		000
0704410		IIJ20150	X	B29	29	LOGIC CHASSIS		444
0704510		IIJ20158	X	B28	28	LOGIC CHASSIS		000
0704610		IIJ20162	X	B28	29	LOGIC CHASSIS		444
0704710		IIJ20159	X	B28	33	LOGIC CHASSIS		000
0704810		IIJ20163	X	B28	34	LOGIC CHASSIS		444
0704910		IIJ20160	X	B28	38	LOGIC CHASSIS		000
0705010		IIJ20164	X	B28	40	LOGIC CHASSIS		444
0705110		IIJ20165	X	B29	36	LOGIC CHASSIS		000
0705210		IIJ20170	X	B29	37	LOGIC CHASSIS		444
0705310		IIJ20166	X	B26	13	LOGIC CHASSIS		000
0705410		IIJ20171	X	B26	16	LOGIC CHASSIS		444
0705510		IIJ20167	X	B29	41	LOGIC CHASSIS		000
0705610		IIJ20172	X	B29	42	LOGIC CHASSIS		444
0800110		IIJ202 B	X	B26	21	LOGIC CHASSIS		000
0800210		IIJ202 D	X	B26	24	LOGIC CHASSIS		444
0800310		IIJ202BB	X	B26	28	LOGIC CHASSIS		000
0800410		IIJ202DD	X	B26	29	LOGIC CHASSIS		444
0800510		IIJ202 E	X	B26	33	LOGIC CHASSIS		000
0800610		IIJ202 H	X	B26	34	LOGIC CHASSIS		444
0800710		IIJ202EE	X	B26	38	LOGIC CHASSIS		000
0800810		IIJ202HH	X	B26	40	LOGIC CHASSIS		444
0800910		IIJ202 F	X	B28	44	LOGIC CHASSIS		000
0801010		IIJ202 J	X	B28	45	LOGIC CHASSIS		444
0801110		IIJ202FF	X	B26	44	LOGIC CHASSIS		000
0801210		IIJ202JJ	X	B26	45	LOGIC CHASSIS		444
0900110	05	A03	45	0	A09	18	LOGIC CHASSIS	
0900210	06	A03	20	0	A11	33	LOGIC CHASSIS	
0900310	06	A03	30	0	A12	45	LOGIC CHASSIS	
0900410	07	A03	32	0	A12	14	LOGIC CHASSIS	
0900510	06	A03	33	0	A12	44	LOGIC CHASSIS	
0900610	06	A03	36	0	A12	42	LOGIC CHASSIS	
0900710	07	A03	37	0	A13	38	LOGIC CHASSIS	
0900810	07	A03	38	0	A13	37	LOGIC CHASSIS	
0900910	07	A03	40	0	A13	36	LOGIC CHASSIS	
0901010	07	A03	41	0	A13	33	LOGIC CHASSIS	
0901110	07	A03	17	0	A12	33	LOGIC CHASSIS	
0901210	04	A03	29	0	A07	16	LOGIC CHASSIS	
0901310	04	A03	25	0	A08	10	LOGIC CHASSIS	
0901510	05	A03	28	0	A08	08	LOGIC CHASSIS	
0901610	07	A03	08	0	A13	10	LOGIC CHASSIS	
0901710	07	A03	05	0	A13	44	LOGIC CHASSIS	
0901810	08	A03	01	0	A13	45	LOGIC CHASSIS	
1000110	05	B03	45	0	B09	18	LOGIC CHASSIS	
1000210	06	B03	20	0	B11	33	LOGIC CHASSIS	
1000310	06	B03	30	0	B12	45	LOGIC CHASSIS	
1000410	07	B03	32	0	B12	14	LOGIC CHASSIS	
1000510	06	B03	33	0	B12	44	LOGIC CHASSIS	

9113

1000610	06	B03	36	0	B12	42	LOGIC CHASSIS	
1000710	07	B03	37	0	B13	38	LOGIC CHASSIS	
1000810	07	B03	38	0	B13	37	LOGIC CHASSIS	
1000910	07	B03	40	0	B13	36	LOGIC CHASSIS	
1001010	07	B03	41	0	B13	33	LOGIC CHASSIS	
1001110	07	B03	17	0	B12	33	LOGIC CHASSIS	
1001210	04	B03	29	0	B07	16	LOGIC CHASSIS	
1001310	04	B03	25	0	B08	10	LOGIC CHASSIS	
1001510	05	B03	28	0	B08	08	LOGIC CHASSIS	
1001610	07	B03	08	0	B13	10	LOGIC CHASSIS	
1001710	07	B03	05	0	B13	44	LOGIC CHASSIS	
1001810	08	B03	01	0	B13	45	LOGIC CHASSIS	
1100010	02	A01	06	R	A02	06	LOGIC CHASSIS	20 666
1100011	02	A02	06	R	A03	06	LOGIC CHASSIS	20 666
1100012	02	A03	06	R	A04	06	LOGIC CHASSIS	20 666
1100013	02	A04	06	R	A05	06	LOGIC CHASSIS	20 666
1100020	02	A06	06	R	A07	06	LOGIC CHASSIS	20 666
1100021	02	A07	06	R	A08	06	LOGIC CHASSIS	20 666
1100022	02	A08	06	R	A09	06	LOGIC CHASSIS	20 666
1100023	02	A09	06	R	A10	06	LOGIC CHASSIS	20 666
1100024	02	A10	06	R	A11	06	LOGIC CHASSIS	20 666
1100030	02	A12	06	R	A13	06	LOGIC CHASSIS	20 666
1100031	02	A13	06	R	A14	06	LOGIC CHASSIS	20 666
1100032	02	A14	06	R	A15	06	LOGIC CHASSIS	20 666
1100033	02	A15	06	R	A16	06	LOGIC CHASSIS	20 666
1100034	02	A16	06	R	A17	06	LOGIC CHASSIS	20 666
1100040	02	A18	06	R	A19	06	LOGIC CHASSIS	20 666
1100041	02	A19	06	R	A20	06	LOGIC CHASSIS	20 666
1100042	02	A20	06	R	A21	06	LOGIC CHASSIS	20 666
1100043	02	A21	06	R	A22	06	LOGIC CHASSIS	20 666
1100044	02	A22	06	R	A23	06	LOGIC CHASSIS	20 666
1100050	02	A24	06	R	A25	06	LOGIC CHASSIS	20 666
1100051	02	A25	06	R	A26	06	LOGIC CHASSIS	20 666
1100060	02	A27	06	R	A28	06	LOGIC CHASSIS	20 666
1100061	02	A28	06	R	A29	06	LOGIC CHASSIS	20 666
1100110	02	A01	46	R	A02	46	LOGIC CHASSIS	20 222
1100111	02	A02	46	R	A03	46	LOGIC CHASSIS	20 222
1100112	02	A03	46	R	A04	46	LOGIC CHASSIS	20 222
1100113	02	A04	46	R	A05	46	LOGIC CHASSIS	20 222
1100120	02	A06	46	R	A07	46	LOGIC CHASSIS	20 222
1100121	02	A07	46	R	A08	46	LOGIC CHASSIS	20 222
1100122	02	A08	46	R	A09	46	LOGIC CHASSIS	20 222
1100123	02	A09	46	R	A10	46	LOGIC CHASSIS	20 222
1100124	02	A10	46	R	A11	46	LOGIC CHASSIS	20 222
1100130	02	A12	46	R	A13	46	LOGIC CHASSIS	20 222
1100131	02	A13	46	R	A14	46	LOGIC CHASSIS	20 222
1100132	02	A14	46	R	A15	46	LOGIC CHASSIS	20 222
1100133	02	A15	46	R	A16	46	LOGIC CHASSIS	20 222
1100134	02	A16	46	R	A17	46	LOGIC CHASSIS	20 222
1100140	02	A18	46	R	A19	46	LOGIC CHASSIS	20 222
1100141	02	A19	46	R	A20	46	LOGIC CHASSIS	20 222
1100142	02	A20	46	R	A21	46	LOGIC CHASSIS	20 222
1100143	02	A21	46	R	A22	46	LOGIC CHASSIS	20 222
1100144	02	A22	46	R	A23	46	LOGIC CHASSIS	20 222
1100150	02	A24	46	R	A25	46	LOGIC CHASSIS	20 222

1100151	02	A25	46	R	A26	46	LOGIC CHASSIS	20	222
1100160	02	A27	46	R	A28	46	LOGIC CHASSIS	20	222
1100161	02	A28	46	R	A29	46	LOGIC CHASSIS	20	222
1100210	02	A01	48	R	A02	48	LOGIC CHASSIS	20	222
1100211	02	A02	48	R	A03	48	LOGIC CHASSIS	20	222
1100212	02	A03	48	R	A04	48	LOGIC CHASSIS	20	222
1100213	02	A04	48	R	A05	48	LOGIC CHASSIS	20	222
1100220	02	A06	48	R	A07	48	LOGIC CHASSIS	20	222
1100221	02	A07	48	R	A08	48	LOGIC CHASSIS	20	222
1100222	02	A08	48	R	A09	48	LOGIC CHASSIS	20	222
1100223	02	A09	48	R	A10	48	LOGIC CHASSIS	20	222
1100230	02	A12	48	R	A13	48	LOGIC CHASSIS	20	222
1100231	02	A13	48	R	A14	48	LOGIC CHASSIS	20	222
1100232	02	A14	48	R	A15	48	LOGIC CHASSIS	20	222
1100233	02	A15	48	R	A16	48	LOGIC CHASSIS	20	222
1100234	02	A16	48	R	A17	48	LOGIC CHASSIS	20	222
1100235	02	A11	48	R	A12	48	LOGIC CHASSIS	20	222
1100240	02	A18	48	R	A19	48	LOGIC CHASSIS	20	222
1100241	02	A19	48	R	A20	48	LOGIC CHASSIS	20	222
1100242	02	A20	48	R	A21	48	LOGIC CHASSIS	20	222
1100243	02	A21	48	R	A22	48	LOGIC CHASSIS	20	222
1100244	02	A22	48	R	A23	48	LOGIC CHASSIS	20	222
1100310	02	B01	06	R	B02	06	LOGIC CHASSIS	20	666
1100311	02	B02	06	R	B03	06	LOGIC CHASSIS	20	666
1100312	02	B03	06	R	B04	06	LOGIC CHASSIS	20	666
1100313	02	B04	06	R	B05	06	LOGIC CHASSIS	20	666
1100320	02	B06	06	R	B07	06	LOGIC CHASSIS	20	666
1100321	02	B07	06	R	B08	06	LOGIC CHASSIS	20	666
1100322	02	B08	06	R	B09	06	LOGIC CHASSIS	20	666
1100323	02	B09	06	R	B10	06	LOGIC CHASSIS	20	666
1100324	02	B10	06	R	B11	06	LOGIC CHASSIS	20	666
1100330	02	B12	06	R	B13	06	LOGIC CHASSIS	20	666
1100331	02	B13	06	R	B14	06	LOGIC CHASSIS	20	666
1100332	02	B14	06	R	B15	06	LOGIC CHASSIS	20	666
1100333	02	B15	06	R	B16	06	LOGIC CHASSIS	20	666
1100334	02	B16	06	R	B17	06	LOGIC CHASSIS	20	666
1100340	02	B18	06	R	B19	06	LOGIC CHASSIS	20	666
1100341	02	B19	06	R	B20	06	LOGIC CHASSIS	20	666
1100342	02	B20	06	R	B21	06	LOGIC CHASSIS	20	666
1100343	02	B21	06	R	B22	06	LOGIC CHASSIS	20	666
1100344	02	B22	06	R	B23	06	LOGIC CHASSIS	20	666
1100350	02	B24	06	R	B25	06	LOGIC CHASSIS	20	666
1100351	02	B25	06	R	B26	06	LOGIC CHASSIS	20	666
1100360	02	B27	06	R	B28	06	LOGIC CHASSIS	20	666
1100361	02	B28	06	R	B29	06	LOGIC CHASSIS	20	666
1100410	02	B01	46	R	B02	46	LOGIC CHASSIS	20	222
1100411	02	B02	46	R	B03	46	LOGIC CHASSIS	20	222
1100412	02	B03	46	R	B04	46	LOGIC CHASSIS	20	222
1100413	02	B04	46	R	B05	46	LOGIC CHASSIS	20	222
1100420	02	B06	46	R	B07	46	LOGIC CHASSIS	20	222
1100421	02	B07	46	R	B08	46	LOGIC CHASSIS	20	222
1100422	02	B08	46	R	B09	46	LOGIC CHASSIS	20	222
1100423	02	B09	46	R	B10	46	LOGIC CHASSIS	20	222
1100424	02	B10	46	R	B11	46	LOGIC CHASSIS	20	222
1100430	02	B12	46	R	B13	46	LOGIC CHASSIS	20	222

5113

1100431	02	B13	46	R	B14	46	LOGIC CHASSIS	20 222	
1100432	02	B14	46	R	B15	46	LOGIC CHASSIS	20 222	
1100433	02	B15	46	R	B16	46	LOGIC CHASSIS	20 222	
1100434	02	B16	46	R	B17	46	LOGIC CHASSIS	20 222	
1100440	02	B18	46	R	B19	46	LOGIC CHASSIS	20 222	
1100441	02	B19	46	R	B20	46	LOGIC CHASSIS	20 222	
1100442	02	B20	46	R	B21	46	LOGIC CHASSIS	20 222	
1100443	02	B21	46	R	B22	46	LOGIC CHASSIS	20 222	
1100444	02	B22	46	R	B23	46	LOGIC CHASSIS	20 222	
1100450	02	B24	46	R	B25	46	LOGIC CHASSIS	20 222	
1100451	02	B25	46	R	B26	46	LOGIC CHASSIS	20 222	
1100460	02	B27	46	R	B28	46	LOGIC CHASSIS	20 222	
1100461	02	B28	46	R	B29	46	LOGIC CHASSIS	20 222	
1100510	02	B01	48	R	B02	48	LOGIC CHASSIS	20 222	
1100511	02	B02	48	R	B03	48	LOGIC CHASSIS	20 222	
1100512	02	B03	48	R	B04	48	LOGIC CHASSIS	20 222	
1100513	02	B04	48	R	B05	48	LOGIC CHASSIS	20 222	
1100520	02	B06	48	R	B07	48	LOGIC CHASSIS	20 222	
1100521	02	B07	48	R	B08	48	LOGIC CHASSIS	20 222	
1100522	02	B08	48	R	B09	48	LOGIC CHASSIS	20 222	
1100523	02	B09	48	R	B10	48	LOGIC CHASSIS	20 222	
1100530	02	B12	48	R	B13	48	LOGIC CHASSIS	20 222	
1100531	02	B13	48	R	B14	48	LOGIC CHASSIS	20 222	
1100532	02	B14	48	R	B15	48	LOGIC CHASSIS	20 222	
1100533	02	B15	48	R	B16	48	LOGIC CHASSIS	20 222	
1100534	02	B16	48	R	B17	48	LOGIC CHASSIS	20 222	
1100535	02	B11	48	R	B12	48	LOGIC CHASSIS	20 222	11118
1100540	02	B18	48	R	B19	48	LOGIC CHASSIS	20 222	
1100541	02	B19	48	R	B20	48	LOGIC CHASSIS	20 222	
1100542	02	B20	48	R	B21	48	LOGIC CHASSIS	20 222	
1100543	02	B21	48	R	B22	48	LOGIC CHASSIS	20 222	
1100544	02	B22	48	R	B23	48	LOGIC CHASSIS	20 222	

DWN	E. WILLIAMS	6-17-70	CONTROL DATA	TITLE: LOGIC WIRE LIST LOGIC CHASSIS SMDD	PREFIX: LW	DOCUMENT NO: 72992700	REV: B
CHKD	E. WILLIAMS	6-17-70					
ENG	EARL DAVIS	6-17-70					
MFG			CODE IDENT: 19333	FIRST USED ON: MULT DISK DRIVE		SHEET 1 OF 2	
APPR							

SHEET REVISION STATUS

REVISION RECORD

REV	ECO	DESCRIPTION	DRFT	DATE	APP
A	PE21647	LW WAS 72970100		11/8/70	[illegible]
B	PE21647B	CHG. WIRE LENGTH			

NOTES:

PRT OUT 72992700

DETACHED LISTS

CONTROL DATA	NORMANDALE DIVISION	CODE IDENT 19333	SHEET 2	LW	DOCUMENT NO 72992700	REV B

NOTES:

1. FOR MECH ASSY & PL SEE 7299400, 72994001.
2. FOR CP & SCHEMATIC SEE SUB-FINAL ASSY 40068042, 40068142 (1X) OR 40068242, 40068342 (2X).
3. INSTALL A SOLID BLACK JUMPER WIRE, FN 76, FROM PIN 2 AND PIN 50 OF EACH CONNECTOR, NUMBER A01 THRU A29 AND B01 THRU B29, TO THE CLOSEST HOLE IN THE CONNECTOR MOUNTING BAR FOR GROUNDING.
4. THESE WIRES ARE PRESENT IN A DUAL CHANNEL UNIT ONLY. (LOGIC CHASSIS 72994000).
5. THESE WIRES ARE PRESENT IN A SINGLE CHANNEL UNIT ONLY. (LOGIC CHASSIS 72994001).

AA3185

CONTROL DATA CORPORATION — LW72992700 LOGIC CHASSIS — REVISION A — DATE 11/13/70
DIVISION 0520 REPORT LST=01 — DEPT 5315 JOB 05791 — PAGE 1 P 7506

IDENT NO	LGTH	ORIGIN		SORT	DESTIN		TITLE	SIZE	COLOR	ECO
AI10010	04	A21	13	0	A25	08	LOGIC CHASSIS			
AI10011	02	A21	13	0	A21	18	LOGIC CHASSIS			NOTE 5
AI10020	08	A21	12	0	B25	08	LOGIC CHASSIS			
AI10110	04	A21	16	0	A25	13	LOGIC CHASSIS			
AI10111	02	A21	16	0	A21	17	LOGIC CHASSIS			NOTE 5
AI10120	08	A21	08	0	B25	13	LOGIC CHASSIS			
AI10210	04	A21	10	0	A25	18	LOGIC CHASSIS			
AI10211	02	A21	10	0	A21	22	LOGIC CHASSIS			NOTE 5
AI10220	09	A21	05	0	B25	18	LOGIC CHASSIS			
AI10310	05	A21	14	0	A27	08	LOGIC CHASSIS			
AI10311	02	A21	14	0	A21	21	LOGIC CHASSIS			NOTE 5
AI10320	08	A21	09	0	B27	08	LOGIC CHASSIS			
AI10410	05	A21	33	0	A27	13	LOGIC CHASSIS			
AI10411	02	A21	33	0	A21	41	LOGIC CHASSIS			NOTE 5
AI10420	08	A21	32	0	B27	13	LOGIC CHASSIS			
AI10510	05	A21	30	0	A27	18	LOGIC CHASSIS			
AI10511	02	A21	30	0	A21	42	LOGIC CHASSIS			NOTE 5
AI10520	07	A21	40	0	B27	18	LOGIC CHASSIS			
AI10610	06	A21	29	0	A29	08	LOGIC CHASSIS			
AI10611	02	A21	29	0	A21	44	LOGIC CHASSIS			NOTE 5
AI10620	07	A21	38	0	B29	08	LOGIC CHASSIS			
AI10710	06	A21	36	0	A29	13	LOGIC CHASSIS			
AI10711	02	A21	36	0	A21	45	LOGIC CHASSIS			NOTE 5
AI10720	08	A21	37	0	B29	13	LOGIC CHASSIS			
AI10810	04	A21	01	0	A20	25	LOGIC CHASSIS			
AI10910	02	A21	34	0	A19	29	LOGIC CHASSIS			
AI11811	05	A16	44	0	A15	02	LOGIC CHASSIS			NOTE 5
AI11810	09	A16	44	0	B25	38	LOGIC CHASSIS			
AI11820	06	A16	45	0	A25	38	LOGIC CHASSIS			
AI12010	04	A16	41	0	A12	28	LOGIC CHASSIS			
AI12110	06	A16	21	0	A25	44	LOGIC CHASSIS			
AI12210	09	A16	42	0	B25	44	LOGIC CHASSIS			
AI12211	04	A16	42	0	A16	02	LOGIC CHASSIS			NOTE 5
AI20010	07	A17	21	0	A08	42	LOGIC CHASSIS			
AI20020	08	A17	25	0	A29	44	LOGIC CHASSIS			
AI20110	11	A17	29	0	B29	44	LOGIC CHASSIS			
AI20111	02	A17	29	0	A17	02	LOGIC CHASSIS			NOTE 5
AI20120	02	A17	40	0	A17	21	LOGIC CHASSIS			
AI21510	03	A18	22	0	A20	25	LOGIC CHASSIS			
AI21710	04	A18	05	0	A19	29	LOGIC CHASSIS			
AI21810	05	A19	08	0	A25	24	LOGIC CHASSIS			
AI22110	06	A19	12	0	A27	24	LOGIC CHASSIS			
AI22310	07	A19	14	0	A29	32	LOGIC CHASSIS			
AI22410	03	A19	18	0	A20	32	LOGIC CHASSIS			
AI22411	02	A19	18	0	A19	02	LOGIC CHASSIS			NOTE 5
AI22510	07	A19	40	0	A29	24	LOGIC CHASSIS			
AI22810	07	A19	42	0	A29	18	LOGIC CHASSIS			
AI23010	03	A19	21	0	A18	21	LOGIC CHASSIS			
AI23210	02	A19	34	0	A20	26	LOGIC CHASSIS			
AI23310	09	A20	08	0	B25	24	LOGIC CHASSIS			

IDENT NO	LGTH	ORIGIN		SORT	DESTIN		TITLE	SIZE	COLOR	ECO
AI23410	02	A20	05	0	A19	09	LOGIC CHASSIS			
AI23420	02	A20	01	0	A19	10	LOGIC CHASSIS			
AI23430	02	A20	09	0	A19	05	LOGIC CHASSIS			
AI23440	02	A20	12	0	A19	17	LOGIC CHASSIS			
AI23510	10	A20	10	0	B27	24	LOGIC CHASSIS			
AI23610	10	A20	22	0	B29	32	LOGIC CHASSIS			
AI23710	02	A20	21	0	A19	30	LOGIC CHASSIS			
AI23810	10	A20	13	0	B29	24	LOGIC CHASSIS			
AI23910	04	A20	17	0	A19	37	LOGIC CHASSIS			
AI23920	04	A20	20	0	A19	38	LOGIC CHASSIS			
AI23930	04	A20	14	0	A19	36	LOGIC CHASSIS			
AI23940	04	A20	16	0	A19	41	LOGIC CHASSIS			
AI24010	09	A20	18	0	B29	18	LOGIC CHASSIS			
AI24110	02	A20	29	0	A19	21	LOGIC CHASSIS			
AI24310	03	A20	37	0	A19	26	LOGIC CHASSIS			
AI24410	04	A20	45	0	A19	13	LOGIC CHASSIS			
AI24910	03	A19	24	0	A17	28	LOGIC CHASSIS			
AI25010	04	A20	41	0	A17	30	LOGIC CHASSIS			
AI25110	08	A08	38	0	A09	50	LOGIC CHASSIS			
AI30110	05	A10	09	0	A09	41	LOGIC CHASSIS			
AI30910	02	A10	01	0	A09	05	LOGIC CHASSIS			
AI31310	02	A10	21	0	A11	22	LOGIC CHASSIS			
AI32010	02	A09	21	0	A10	21	LOGIC CHASSIS			
AI32210	03	A09	44	0	A10	25	LOGIC CHASSIS			
AI33010	11	A09	28	0	A27	44	LOGIC CHASSIS			
AI33020	12	A09	29	0	B27	44	LOGIC CHASSIS			
AI33021	03	A09	29	0	A09	02	LOGIC CHASSIS			NOTE 5
AI34510	06	A18	38	0	A09	42	LOGIC CHASSIS			
AI34710	06	A18	16	0	A10	17	LOGIC CHASSIS			
AI34711	03	A10	17	0	A09	25	LOGIC CHASSIS			
AI34910	07	A18	41	0	A09	16	LOGIC CHASSIS			
AI36010	02	A09	01	0	A10	12	LOGIC CHASSIS			
AI36020	02	A09	09	0	A10	05	LOGIC CHASSIS			
AI36030	02	A09	12	0	A10	20	LOGIC CHASSIS			
AI36040	02	A09	17	0	A10	13	LOGIC CHASSIS			
AI36110	03	A09	20	0	A10	29	LOGIC CHASSIS			
AI36120	02	A09	24	0	A10	22	LOGIC CHASSIS			
AI36130	02	A09	32	0	A10	36	LOGIC CHASSIS			
AI36140	02	A09	36	0	A10	33	LOGIC CHASSIS			
AI36210	03	A09	38	0	A10	45	LOGIC CHASSIS			
AI36220	02	A09	45	0	A10	40	LOGIC CHASSIS			
AI36230	04	A09	34	0	A10	14	LOGIC CHASSIS			
AI36810	06	A09	40	0	A19	32	LOGIC CHASSIS			
AI36811	02	A19	32	0	A20	38	LOGIC CHASSIS			
AI36820	03	A09	37	0	A08	25	LOGIC CHASSIS			
AI40010	11	A12	05	0	B25	32	LOGIC CHASSIS			
AI40011	02	A12	05	0	A12	02	LOGIC CHASSIS			NOTE 5
AI40020	08	A12	08	0	A25	32	LOGIC CHASSIS			
AI40710	05	A12	36	0	A08	09	LOGIC CHASSIS			
AI40720	03	A12	37	0	A14	29	LOGIC CHASSIS			

IDENT NO	LGTH	ORIGIN		SORT	DESTIN		TITLE	SIZE	COLOR	ECO
AI40730	04	A12	32	0	A07	38	LOGIC CHASSIS			
AI40910	03	A13	21	0	A12	10	LOGIC CHASSIS			
AI40911	04	A12	10	0	A08	20	LOGIC CHASSIS			
AI41010	05	A12	09	0	A08	21	LOGIC CHASSIS			
AI41011	03	A12	09	0	A13	24	LOGIC CHASSIS			
AI41210	04	A11	08	0	A12	40	LOGIC CHASSIS			
AI41211	04	A12	40	0	A13	13	LOGIC CHASSIS			
AI41220	05	A11	05	0	A12	41	LOGIC CHASSIS			
AI41221	04	A12	41	0	A13	17	LOGIC CHASSIS			
AI41310	04	A11	01	0	A12	34	LOGIC CHASSIS			
AI41510	04	A11	12	0	A12	38	LOGIC CHASSIS			
AI41511	04	A12	38	0	A13	09	LOGIC CHASSIS			
AI41710	04	A13	45	0	A11	17	LOGIC CHASSIS			
AI41810	03	A13	41	0	A11	29	LOGIC CHASSIS			
AI42210	03	A12	20	0	A13	08	LOGIC CHASSIS			
AI42220	04	A12	21	0	A13	01	LOGIC CHASSIS			
AI42230	02	A12	22	0	A13	18	LOGIC CHASSIS			
AI42710	04	A13	42	0	A11	13	LOGIC CHASSIS			
AI50910	04	A08	16	0	A12	17	LOGIC CHASSIS			
AI50920	04	A08	18	0	A12	12	LOGIC CHASSIS			
AI50930	02	A08	17	0	A09	14	LOGIC CHASSIS			
AI51310	05	A11	41	0	A07	09	LOGIC CHASSIS			
AI51410	04	A11	21	0	A07	25	LOGIC CHASSIS			
AI52010	06	A07	20	0	A14	38	LOGIC CHASSIS			
AI52020	07	A07	14	0	A17	14	LOGIC CHASSIS			
AI52030	02	A07	21	0	A06	09	LOGIC CHASSIS			
AI52110	04	A11	36	0	A08	13	LOGIC CHASSIS			
AI52210	04	A07	24	0	A11	32	LOGIC CHASSIS			
AI52220	02	A07	32	0	A08	25	LOGIC CHASSIS			
AI52230	03	A07	30	0	A08	16	LOGIC CHASSIS			
AI52310	06	A08	29	0	A17	12	LOGIC CHASSIS			
AI52320	11	A08	28	0	A27	38	LOGIC CHASSIS			
AI52330	13	A08	30	0	B27	36	LOGIC CHASSIS			
AI52331	03	A08	30	0	A08	50	LOGIC CHASSIS			NOTE 5
AI52340	07	A08	32	0	A17	13	LOGIC CHASSIS			
AI60010	11	A08	41	0	A27	32	LOGIC CHASSIS			
AI60020	12	A08	44	0	B27	32	LOGIC CHASSIS			
AI60021	05	A08	44	0	A07	02	LOGIC CHASSIS			NOTE 5
AI60210	06	A15	01	0	A08	33	LOGIC CHASSIS			
AI60610	05	A15	26	0	A08	40	LOGIC CHASSIS			
AI61210	05	A17	22	0	A11	36	LOGIC CHASSIS			
AI62210	05	A14	05	0	A11	44	LOGIC CHASSIS			
AI62310	02	A14	13	0	A15	05	LOGIC CHASSIS			
AI62410	02	A14	16	0	A15	10	LOGIC CHASSIS			
AI62510	02	A14	12	0	A15	18	LOGIC CHASSIS			
AI63810	06	A09	40	0	A17	30	LOGIC CHASSIS			NOTE 5
AK10010	04	A16	33	0	A21	18	LOGIC CHASSIS			
AK10210	04	A16	25	0	A21	17	LOGIC CHASSIS			
AK10410	04	A16	22	0	A21	22	LOGIC CHASSIS			
AK10610	05	A16	12	0	A21	21	LOGIC CHASSIS			

IDENT NO	LGTH	ORIGIN		SORT	DESTIN		TITLE	SIZE	COLOR	ECO
AK10810	04	A16	37	0	A21	41	LOGIC CHASSIS			
AK11010	04	A16	29	0	A21	42	LOGIC CHASSIS			
AK11210	05	A16	18	0	A21	44	LOGIC CHASSIS			
AK11410	06	A16	08	0	A21	45	LOGIC CHASSIS			
AK20210	03	A19	28	0	A20	44	LOGIC CHASSIS			
AK20310	07	A19	22	0	A29	38	LOGIC CHASSIS			
AK20510	09	A20	40	0	B29	38	LOGIC CHASSIS			
AK30010	04	A09	10	0	A13	32	LOGIC CHASSIS			
AK30210	04	A09	08	0	A13	20	LOGIC CHASSIS			
AK30410	03	A09	14	0	A13	12	LOGIC CHASSIS			
AK30610	05	A09	33	0	A13	05	LOGIC CHASSIS			
AK30810	04	A09	22	0	A12	25	LOGIC CHASSIS			
AK35010	03	A09	13	0	A10	32	LOGIC CHASSIS			
AK40010	03	A13	32	0	A14	13	LOGIC CHASSIS			
AK40210	02	A13	20	0	A14	12	LOGIC CHASSIS			
AK40410	02	A13	12	0	A15	08	LOGIC CHASSIS			
AK40610	05	A13	05	0	A15	41	LOGIC CHASSIS			
AK40620	03	A13	30	0	A12	13	LOGIC CHASSIS			
AK40710	03	A13	40	0	A12	26	LOGIC CHASSIS			
AK40810	03	A12	25	0	A14	16	LOGIC CHASSIS			
AK41010	04	A12	17	0	A16	29	LOGIC CHASSIS			
AK41210	04	A12	12	0	A14	28	LOGIC CHASSIS			
AK41410	04	A12	01	0	A16	08	LOGIC CHASSIS			
AK50010	03	A14	28	0	A16	18	LOGIC CHASSIS			
AK50020	05	A14	25	0	A08	14	LOGIC CHASSIS			
AK50030	06	A14	14	0	A08	12	LOGIC CHASSIS			
AK50210	04	A07	10	0	A11	16	LOGIC CHASSIS			
AK50211	04	A11	16	0	A13	34	LOGIC CHASSIS			
AK50212	04	A13	34	0	A11	42	LOGIC CHASSIS			
AK50310	02	A07	12	0	A08	05	LOGIC CHASSIS			
AK50311	05	A08	05	0	A13	28	LOGIC CHASSIS			
AK50610	04	A07	26	0	A11	14	LOGIC CHASSIS			
AK50620	04	A07	33	0	A08	13	LOGIC CHASSIS			
AK50710	05	A07	36	0	A11	09	LOGIC CHASSIS			
AK50810	05	A07	42	0	A11	13	LOGIC CHASSIS			
AK50910	05	A07	40	0	A11	10	LOGIC CHASSIS			
AK51110	02	A11	32	0	A12	37	LOGIC CHASSIS			
AK51120	04	A11	37	0	A11	50	LOGIC CHASSIS			
AK60010	04	A15	05	0	A16	33	LOGIC CHASSIS			
AK60210	02	A15	18	0	A16	25	LOGIC CHASSIS			
AK60410	03	A15	08	0	A16	22	LOGIC CHASSIS			
AK60610	04	A15	41	0	A16	12	LOGIC CHASSIS			
AK60810	04	A15	10	0	A16	37	LOGIC CHASSIS			
AK61010	04	A17	36	0	A14	21	LOGIC CHASSIS			
AK61210	05	A17	37	0	A11	33	LOGIC CHASSIS			
AK61410	04	A17	17	0	A14	24	LOGIC CHASSIS			
AK61810	04	A17	24	0	A14	10	LOGIC CHASSIS			
AK62010	04	A17	01	0	A14	17	LOGIC CHASSIS			
AT00010	07	A24	01	0	A16	34	LOGIC CHASSIS			
AT00020	11	A24	05	0	B16	34	LOGIC CHASSIS			

IDENT NO	LGTH	ORIGIN		SORT	DESTIN		TITLE	SIZE	COLOR	ECO
AT00110	06	A24	12	0	A16	26	LOGIC CHASSIS[			
AT00120	10	A24	14	0	B16	26	LOGIC CHASSIS[			
AT00210	06	A24	17	0	A16	20	LOGIC CHASSIS[			
AT00220	09	A24	18	0	B16	20	LOGIC CHASSIS[			
AT00310	06	A24	25	0	A16	09	LOGIC CHASSIS[			
AT00320	08	A24	26	0	B16	09	LOGIC CHASSIS[			
AT00410	06	A24	30	0	A16	38	LOGIC CHASSIS[			
AT00420	09	A24	32	0	B16	38	LOGIC CHASSIS[			
AT00510	06	A24	36	0	A16	30	LOGIC CHASSIS[			
AT00520	09	A24	37	0	B16	30	LOGIC CHASSIS[			
AT00610	07	A24	41	0	A16	16	LOGIC CHASSIS[			
AT00620	08	A24	42	0	B16	16	LOGIC CHASSIS[			
AT00710	07	A26	01	0	A16	05	LOGIC CHASSIS[			
AT00720	10	A26	05	0	B16	05	LOGIC CHASSIS[			
AT00810	05	A26	12	0	A20	28	LOGIC CHASSIS[			
AT00811	03	A26	12	0	A26	02	LOGIC CHASSIS[			NOTE 5
AT00820	10	A26	14	0	B20	28	LOGIC CHASSIS[			
AT00821	04	A26	14	0	A25	02	LOGIC CHASSIS[			NOTE 5
AT01210	07	A28	01	0	A18	12	LOGIC CHASSIS[			
AT01220	10	A28	05	0	B18	12	LOGIC CHASSIS[			
AT01310	07	A28	12	0	A18	10	LOGIC CHASSIS[			
AT01320	09	A28	14	0	B18	10	LOGIC CHASSIS[			
AT01410	07	A28	17	0	A18	13	LOGIC CHASSIS[			
AT01420	09	A28	18	0	B18	13	LOGIC CHASSIS[			
AT01610	07	A28	25	0	A18	09	LOGIC CHASSIS[			
AT01620	09	A28	26	0	B18	09	LOGIC CHASSIS[			
AT01710	07	A28	30	0	A19	16	LOGIC CHASSIS[			
AT01711	02	A19	16	0	A18	14	LOGIC CHASSIS[			
AT01720	08	A28	32	0	B19	16	LOGIC CHASSIS[			
AT01721	02	B19	16	0	B18	14	LOGIC CHASSIS[			
AT01810	07	A28	36	0	A18	01	LOGIC CHASSIS[			
AT01820	08	A28	37	0	B18	01	LOGIC CHASSIS[			
AT01910	06	A26	17	0	A18	08	LOGIC CHASSIS[			
AT01920	02	A26	18	0	A26	26	LOGIC CHASSIS[			
AT02010	08	A26	25	0	B18	08	LOGIC CHASSIS[			
AT02020	02	A26	26	0	A26	32	LOGIC CHASSIS[			
AT02110	06	A26	30	0	A18	44	LOGIC CHASSIS[			
AT02120	02	A26	32	0	A26	37	LOGIC CHASSIS[			
AT02210	09	A26	36	0	B18	44	LOGIC CHASSIS[			
AT02220	02	A26	37	0	A26	42	LOGIC CHASSIS[			
AT02310	02	A28	42	0	A28	50	LOGIC CHASSIS[			
AT02310	05	A28	41	0	A22	33	LOGIC CHASSIS[			
AT02410	08	A26	41	0	B22	33	LOGIC CHASSIS[			
AT02420	02	A26	42	0	A26	50	LOGIC CHASSIS[			
AY30110	02	A10	28	0	A10	26	LOGIC CHASSIS[			
AY30111	02	A10	26	0	A10	24	LOGIC CHASSIS[			
AY30112	04	A10	24	0	A10	08	LOGIC CHASSIS[			
AY30113	02	A10	28	0	A10	34	LOGIC CHASSIS[			
AY30114	03	A10	34	0	A10	44	LOGIC CHASSIS[			
AY32010	03	A09	30	0	A10	18	LOGIC CHASSIS[			

IDENT NO	LGTH	ORIGIN		SORT	DESTIN		TITLE	SIZE	COLOR	ECO
AY36010	04	A09	18	0	A11	44	LOGIC CHASSIS			
AY40410	05	A13	10	0	A07	08	LOGIC CHASSIS			
AY51510	03	A08	24	0	A11	20	LOGIC CHASSIS			
AY51511	06	A11	20	0	A18	37	LOGIC CHASSIS			
AY60110	03	A17	10	0	A14	09	LOGIC CHASSIS			
AY60410	04	A08	37	0	A11	40	LOGIC CHASSIS			
AY60411	03	A11	40	0	A14	33	LOGIC CHASSIS			
BI10010	08	B21	13	0	A25	10	LOGIC CHASSIS			
BI10011	02	B21	13	0	B21	18	LOGIC CHASSIS			NOTE 5
BI10020	04	B21	12	0	B25	10	LOGIC CHASSIS			
BI10110	08	B21	16	0	A25	14	LOGIC CHASSIS			
BI10111	02	B21	16	0	B21	17	LOGIC CHASSIS			NOTE 5
BI10120	04	B21	08	0	B25	14	LOGIC CHASSIS			
BI10210	08	B21	10	0	A25	20	LOGIC CHASSIS			
BI10211	02	B21	10	0	B21	22	LOGIC CHASSIS			NOTE 5
BI10220	04	B21	05	0	B25	20	LOGIC CHASSIS			
BI10310	09	B21	14	0	A27	10	LOGIC CHASSIS			
BI10311	02	B21	14	0	B21	21	LOGIC CHASSIS			NOTE 5
BI10320	05	B21	09	0	B27	10	LOGIC CHASSIS			
BI10410	10	B21	33	0	A27	14	LOGIC CHASSIS			
BI10411	02	B21	33	0	B21	41	LOGIC CHASSIS			NOTE 5
BI10420	05	B21	32	0	B27	14	LOGIC CHASSIS			
BI10510	09	B21	30	0	A27	20	LOGIC CHASSIS			
BI10511	02	B21	30	0	B21	42	LOGIC CHASSIS			NOTE 5
BI10520	05	B21	40	0	B27	20	LOGIC CHASSIS			
BI10610	10	B21	29	0	A29	10	LOGIC CHASSIS			
BI10611	02	B21	29	0	B21	44	LOGIC CHASSIS			NOTE 5
BI10620	06	B21	38	0	B29	10	LOGIC CHASSIS			
BI10710	10	B21	36	0	A29	14	LOGIC CHASSIS			
BI10711	02	B21	36	0	B21	45	LOGIC CHASSIS			NOTE 5
BI10720	06	B21	37	0	B29	14	LOGIC CHASSIS			
BI10810	04	B21	01	0	B20	25	LOGIC CHASSIS			
BI10910	02	B21	34	0	B19	29	LOGIC CHASSIS			
BI11810	09	B16	44	0	B25	40	LOGIC CHASSIS			
BI11811	05	B16	44	0	B15	02	LOGIC CHASSIS			NOTE 5
BI11820	10	B16	45	0	A25	40	LOGIC CHASSIS			
BI12010	04	B16	41	0	B12	28	LOGIC CHASSIS			
BI12110	08	B16	21	0	A25	45	LOGIC CHASSIS			
BI12210	07	B16	42	0	B25	45	LOGIC CHASSIS			
BI12211	04	B16	42	0	B16	02	LOGIC CHASSIS			NOTE 5
BI20010	07	B17	21	0	B08	42	LOGIC CHASSIS			
BI20020	09	B17	25	0	A29	45	LOGIC CHASSIS			
BI20110	08	B17	29	0	B29	45	LOGIC CHASSIS			
BI20111	03	B17	29	0	B17	02	LOGIC CHASSIS			NOTE 5
BI20120	02	B17	40	0	B17	21	LOGIC CHASSIS			
BI21510	03	B18	22	0	B20	25	LOGIC CHASSIS			
BI21710	04	B18	05	0	B19	29	LOGIC CHASSIS			
BI21810	07	B19	08	0	A25	25	LOGIC CHASSIS			
BI22110	08	B19	12	0	A27	25	LOGIC CHASSIS			
BI22310	08	B19	14	0	A29	33	LOGIC CHASSIS			

IDENT NO	LGTH	ORIGIN		SORT	DESTIN		TITLE	SIZE	COLOR	ECO
BI22410	03	B19	18	0	B20	32	LOGIC CHASSIS			
BI22411	02	B19	18	0	B19	02	LOGIC CHASSIS			NOTE 5
BI22510	10	B19	40	0	A29	25	LOGIC CHASSIS			
BI22810	11	B19	42	0	A29	20	LOGIC CHASSIS			
BI23010	02	B19	21	0	B18	21	LOGIC CHASSIS			
BI23210	02	B19	34	0	B20	26	LOGIC CHASSIS			
BI23310	05	B20	08	0	B25	25	LOGIC CHASSIS			
BI23410	02	B20	05	0	B19	09	LOGIC CHASSIS			
BI23420	02	B20	01	0	B19	10	LOGIC CHASSIS			
BI23430	02	B20	09	0	B19	05	LOGIC CHASSIS			
BI23440	02	B20	12	0	B19	17	LOGIC CHASSIS			
BI23510	06	B20	10	0	B27	25	LOGIC CHASSIS			
BI23610	07	B20	22	0	B29	33	LOGIC CHASSIS			
BI23710	02	B20	21	0	B19	30	LOGIC CHASSIS			
BI23810	07	B20	13	0	B29	25	LOGIC CHASSIS			
BI23910	04	B20	17	0	B19	37	LOGIC CHASSIS			
BI23920	04	B20	20	0	B19	38	LOGIC CHASSIS			
BI23930	04	B20	14	0	B19	36	LOGIC CHASSIS			
BI23940	04	B20	16	0	B19	41	LOGIC CHASSIS			
BI24010	07	B20	18	0	B29	20	LOGIC CHASSIS			
BI24110	02	B20	29	0	B19	21	LOGIC CHASSIS			
BI24310	03	B20	37	0	B19	26	LOGIC CHASSIS			
BI24410	04	B20	45	0	B19	13	LOGIC CHASSIS			
BI24910	03	B19	24	0	B17	28	LOGIC CHASSIS			
BI25010	03	B20	41	0	B17	30	LOGIC CHASSIS			
BI25110	09	B08	38	0	B09	50	LOGIC CHASSIS			
BI30110	04	B10	09	0	B09	41	LOGIC CHASSIS			
BI30910	02	B10	01	0	B09	05	LOGIC CHASSIS			
BI31310	02	B10	21	0	B11	22	LOGIC CHASSIS			
BI32010	02	B09	21	0	B10	21	LOGIC CHASSIS			
BI32210	03	B09	44	0	B10	25	LOGIC CHASSIS			
BI33010	12	B09	28	0	A27	45	LOGIC CHASSIS			
BI33020	11	B09	29	0	B27	45	LOGIC CHASSIS			
BI33021	03	B09	29	0	B09	02	LOGIC CHASSIS			NOTE 5
BI34510	06	B18	38	0	B09	42	LOGIC CHASSIS			
BI34710	06	B18	16	0	B10	17	LOGIC CHASSIS			
BI34711	03	B10	17	0	B09	25	LOGIC CHASSIS			
BI34910	07	B18	41	0	B09	16	LOGIC CHASSIS			
BI36010	02	B09	01	0	B10	12	LOGIC CHASSIS			
BI36020	02	B09	09	0	B10	05	LOGIC CHASSIS			
BI36030	02	B09	12	0	B10	20	LOGIC CHASSIS			
BI36040	02	B09	17	0	B10	13	LOGIC CHASSIS			
BI36110	03	B09	20	0	B10	29	LOGIC CHASSIS			
BI36120	02	B09	24	0	B10	22	LOGIC CHASSIS			
BI36130	02	B09	32	0	B10	36	LOGIC CHASSIS			
BI36140	02	B09	36	0	B10	33	LOGIC CHASSIS			
BI36210	02	B09	38	0	B10	45	LOGIC CHASSIS			
BI36220	02	B09	45	0	B10	40	LOGIC CHASSIS			
BI36230	04	B09	34	0	B10	14	LOGIC CHASSIS			
BI36810	07	B09	40	0	B19	32	LOGIC CHASSIS			

IDENT NO	LGTH	ORIGIN		SORT	DESTIN		TITLE	SIZE	COLOR	ECO
BI36811	02	B19	32	0	B20	38	LOGIC CHASSIS			
BI36820	03	B09	37	0	B08	25	LOGIC CHASSIS			
BI40010	09	B12	05	0	B25	33	LOGIC CHASSIS			
BI40011	02	B12	05	0	B12	02	LOGIC CHASSIS			NOTE 5
BI40020	09	B12	08	0	A25	33	LOGIC CHASSIS			
BI40710	05	B12	36	0	B08	09	LOGIC CHASSIS			
BI40720	03	B12	37	0	B14	29	LOGIC CHASSIS			
BI40730	04	B12	32	0	B07	38	LOGIC CHASSIS			
BI40910	03	B13	21	0	B12	10	LOGIC CHASSIS			
BI40911	04	B12	10	0	B08	20	LOGIC CHASSIS			
BI41010	05	B12	09	0	B08	21	LOGIC CHASSIS			
BI41011	03	B12	09	0	B13	24	LOGIC CHASSIS			
BI41210	05	B11	08	0	B12	40	LOGIC CHASSIS			
BI41211	04	B12	40	0	B13	13	LOGIC CHASSIS			
BI41220	05	B11	05	0	B12	41	LOGIC CHASSIS			
BI41221	04	B12	41	0	B13	17	LOGIC CHASSIS			
BI41310	04	B11	01	0	B12	34	LOGIC CHASSIS			
BI41510	04	B11	12	0	B12	38	LOGIC CHASSIS			
BI41511	04	B12	38	0	B13	09	LOGIC CHASSIS			
BI41710	04	B13	45	0	B11	17	LOGIC CHASSIS			
BI41810	03	B13	41	0	B11	29	LOGIC CHASSIS			
BI42210	03	B12	20	0	B13	08	LOGIC CHASSIS			
BI42220	04	B12	21	0	B13	01	LOGIC CHASSIS			
BI42230	02	B12	22	0	B13	18	LOGIC CHASSIS			
BI42710	04	B13	42	0	B11	13	LOGIC CHASSIS			
BI50910	04	B08	16	0	B12	17	LOGIC CHASSIS			
BI50920	04	B08	18	0	B12	12	LOGIC CHASSIS			
BI50930	02	B08	17	0	B09	14	LOGIC CHASSIS			
BI51310	05	B11	41	0	B07	09	LOGIC CHASSIS			
BI51410	04	B11	21	0	B07	25	LOGIC CHASSIS			
BI52010	06	B07	20	0	B14	38	LOGIC CHASSIS			
BI52020	07	B07	14	0	B17	14	LOGIC CHASSIS			
BI52030	03	B07	21	0	B08	09	LOGIC CHASSIS			
BI52110	04	B11	36	0	B08	13	LOGIC CHASSIS			
BI52210	04	B07	24	0	B11	32	LOGIC CHASSIS			
BI52220	03	B07	32	0	B08	25	LOGIC CHASSIS			
BI52230	03	B07	30	0	B08	16	LOGIC CHASSIS			
BI52310	06	B08	29	0	B17	12	LOGIC CHASSIS			
BI52320	12	B08	28	0	A27	40	LOGIC CHASSIS			
BI52330	11	B08	30	0	B27	40	LOGIC CHASSIS			
BI52331	03	B08	30	0	B08	50	LOGIC CHASSIS			NOTE 5
BI52340	07	B08	32	0	B17	13	LOGIC CHASSIS			
BI60010	12	B08	41	0	A27	33	LOGIC CHASSIS			
BI60020	11	B08	44	0	B27	33	LOGIC CHASSIS			
BI60021	05	B08	44	0	B07	02	LOGIC CHASSIS			NOTE 5
BI60210	06	B15	01	0	B08	33	LOGIC CHASSIS			
BI60610	05	B15	26	0	B08	40	LOGIC CHASSIS			
BI61210	05	B17	22	0	B11	36	LOGIC CHASSIS			
BI62210	05	B14	05	0	B11	44	LOGIC CHASSIS			
BI62310	02	B14	13	0	B15	05	LOGIC CHASSIS			

IDENT NO	LGTH	ORIGIN		SORT	DESTIN		TITLE	SIZE	COLOR	ECO
BI62410	02	B14	16	0	B15	10	LOGIC CHASSIS[			
BI62510	02	B14	12	0	B15	18	LOGIC CHASSIS[			
BI63810	06	B09	40	0	B17	30	LOGIC CHASSIS[			NOTE 5
BK10010	04	B16	33	0	B21	18	LOGIC CHASSIS[			
BK10210	04	B16	25	0	B21	17	LOGIC CHASSIS[			
BK10410	04	B16	22	0	B21	22	LOGIC CHASSIS[			
BK10610	05	B16	12	0	B21	21	LOGIC CHASSIS[			
BK10810	04	B16	37	0	B21	41	LOGIC CHASSIS[			
BK11010	04	B16	29	0	B21	42	LOGIC CHASSIS[			
BK11210	05	B16	18	0	B21	44	LOGIC CHASSIS[			
BK11410	06	B16	08	0	B21	45	LOGIC CHASSIS[			
BK20210	03	B19	28	0	B20	44	LOGIC CHASSIS[			
BK20310	08	B19	22	0	A29	40	LOGIC CHASSIS[			
BK20510	06	B20	40	0	B29	40	LOGIC CHASSIS[			
BK30010	04	B09	10	0	B13	32	LOGIC CHASSIS[			
BK30210	04	B09	08	0	B13	20	LOGIC CHASSIS[			
BK30410	03	B09	14	0	B13	12	LOGIC CHASSIS[			
BK30610	05	B09	33	0	B13	05	LOGIC CHASSIS[			
BK30810	04	B09	22	0	B12	25	LOGIC CHASSIS[			
BK35010	03	B09	13	0	B10	32	LOGIC CHASSIS[			
BK40010	03	B13	32	0	B14	13	LOGIC CHASSIS[			
BK40210	02	B13	20	0	B14	12	LOGIC CHASSIS[			
BK40410	02	B13	12	0	B15	08	LOGIC CHASSIS[			
BK40610	05	B13	05	0	B15	41	LOGIC CHASSIS[			
BK40620	03	B13	30	0	B12	13	LOGIC CHASSIS[			
BK40710	03	B13	40	0	B12	26	LOGIC CHASSIS[			
BK40810	03	B12	25	0	B14	16	LOGIC CHASSIS[			
BK41010	04	B12	17	0	B16	29	LOGIC CHASSIS[			
BK41210	04	B12	12	0	B14	28	LOGIC CHASSIS[			
BK41410	04	B12	01	0	B16	08	LOGIC CHASSIS[			
BK50010	03	B14	28	0	B16	18	LOGIC CHASSIS[			
BK50020	05	B14	25	0	B08	14	LOGIC CHASSIS[			
BK50030	06	B14	14	0	B08	12	LOGIC CHASSIS[			
BK50210	04	B07	10	0	B11	16	LOGIC CHASSIS[			
BK50211	04	B11	16	0	B13	34	LOGIC CHASSIS[			
BK50212	04	B13	34	0	B11	42	LOGIC CHASSIS[			
BK50310	02	B07	12	0	B08	05	LOGIC CHASSIS[			
BK50311	05	B08	05	0	B13	28	LOGIC CHASSIS[			
BK50610	04	B07	26	0	B11	14	LOGIC CHASSIS[			
BK50620	04	B07	33	0	B08	13	LOGIC CHASSIS[			
BK50710	05	B07	36	0	B11	09	LOGIC CHASSIS[			
BK50810	05	B07	42	0	B11	13	LOGIC CHASSIS[			
BK50910	05	B07	40	0	B11	10	LOGIC CHASSIS[			
BK51110	02	B11	32	0	B12	37	LOGIC CHASSIS[			
BK51120	03	B11	37	0	B11	50	LOGIC CHASSIS[			
BK60010	04	B15	05	0	B16	33	LOGIC CHASSIS[			
BK60210	02	B15	18	0	B16	25	LOGIC CHASSIS[			
BK60410	03	B15	08	0	B16	22	LOGIC CHASSIS[			
BK60610	04	B15	41	0	B16	12	LOGIC CHASSIS[			
BK60810	04	B15	10	0	B16	37	LOGIC CHASSIS[			

IDENT NO	LGTH	ORIGIN		SORT	DESTIN		TITLE	SIZE	COLOR	ECO
BK61010	03	B17	36	0	B14	21	LOGIC CHASSIS			
BK61210	05	B17	37	0	B11	33	LOGIC CHASSIS			
BK61410	04	B17	17	0	B14	24	LOGIC CHASSIS			
BK61810	04	B17	24	0	B14	10	LOGIC CHASSIS			
BK62010	04	B17	01	0	B14	17	LOGIC CHASSIS			
BT00010	08	B24	01	0	A16	36	LOGIC CHASSIS			
BT00020	07	B24	05	0	B16	36	LOGIC CHASSIS			
BT00110	08	B24	12	0	A16	28	LOGIC CHASSIS			
BT00120	06	B24	14	0	B16	28	LOGIC CHASSIS			
BT00210	09	B24	17	0	A16	17	LOGIC CHASSIS			
BT00220	06	B24	18	0	B16	17	LOGIC CHASSIS			
BT00310	10	B24	25	0	A16	10	LOGIC CHASSIS			
BT00320	06	B24	26	0	B16	10	LOGIC CHASSIS			
BT00410	08	B24	30	0	A16	40	LOGIC CHASSIS			
BT00420	06	B24	32	0	B16	40	LOGIC CHASSIS			
BT00510	09	B24	36	0	A16	32	LOGIC CHASSIS			
BT00520	06	B24	37	0	B16	32	LOGIC CHASSIS			
BT00610	11	B24	41	0	A16	13	LOGIC CHASSIS			
BT00620	06	B24	42	0	B16	13	LOGIC CHASSIS			
BT00710	09	B26	01	0	A16	01	LOGIC CHASSIS			
BT00720	06	B26	05	0	B16	01	LOGIC CHASSIS			
BT00810	08	B26	12	0	A19	25	LOGIC CHASSIS			
BT00811	03	B26	12	0	B26	02	LOGIC CHASSIS			NOTE 5
BT00820	05	B26	14	0	B19	25	LOGIC CHASSIS			
BT00821	04	B26	14	0	B25	02	LOGIC CHASSIS			NOTE 5
BT01210	08	B28	01	0	A18	32	LOGIC CHASSIS			
BT01220	07	B28	05	0	B18	32	LOGIC CHASSIS			
BT01310	09	B28	12	0	A18	29	LOGIC CHASSIS			
BT01320	07	B28	14	0	B18	29	LOGIC CHASSIS			
BT01410	09	B28	17	0	A18	26	LOGIC CHASSIS			
BT01420	07	B28	18	0	B18	26	LOGIC CHASSIS			
BT01610	10	B28	25	0	A18	30	LOGIC CHASSIS			
BT01620	07	B28	26	0	B18	30	LOGIC CHASSIS			
BT01710	10	B28	30	0	A20	24	LOGIC CHASSIS			
BT01711	04	A20	24	0	A18	33	LOGIC CHASSIS			
BT01720	06	B28	32	0	B20	24	LOGIC CHASSIS			
BT01721	03	B20	24	0	B18	33	LOGIC CHASSIS			
BT01810	10	B28	36	0	A18	34	LOGIC CHASSIS			
BT01820	07	B28	37	0	B18	34	LOGIC CHASSIS			
BT01910	09	B26	17	0	A18	25	LOGIC CHASSIS			
BT01920	02	B26	18	0	B26	26	LOGIC CHASSIS			
BT02010	06	B26	25	0	B18	25	LOGIC CHASSIS			
BT02020	02	B26	26	0	B26	32	LOGIC CHASSIS			
BT02110	09	B26	30	0	A20	33	LOGIC CHASSIS			
BT02111	02	A20	33	0	A18	45	LOGIC CHASSIS			
BT02120	02	B26	32	0	B26	37	LOGIC CHASSIS			
BT02210	05	B26	36	0	B20	33	LOGIC CHASSIS			
BT02211	02	B20	33	0	B18	45	LOGIC CHASSIS			
BT02220	02	B26	37	0	B26	42	LOGIC CHASSIS			
BT02310	10	B28	41	0	A22	21	LOGIC CHASSIS			

IDENT NO	LGTH	ORIGIN		SORT	DESTIN		TITLE	SIZE	COLOR	ECO
BT02320	02	B28	42	0	B28	50	LOGIC CHASSIS			
BT02410	05	B26	41	0	B22	21	LOGIC CHASSIS			
BT02420	02	B26	42	0	B26	50	LOGIC CHASSIS			
BY30110	02	B10	28	0	B10	26	LOGIC CHASSIS			
BY30111	02	B10	26	0	B10	24	LOGIC CHASSIS			
BY30112	04	B10	24	0	B10	08	LOGIC CHASSIS			
BY30113	02	B10	28	0	B10	34	LOGIC CHASSIS			
BY30114	02	B10	34	0	B10	44	LOGIC CHASSIS			
BY32010	03	B09	30	0	B10	18	LOGIC CHASSIS			
BY36010	04	B09	18	0	B11	44	LOGIC CHASSIS			
BY40410	05	B13	10	0	B07	08	LOGIC CHASSIS			
BY51510	03	B08	24	0	B11	20	LOGIC CHASSIS			
BY51511	06	B11	20	0	B18	37	LOGIC CHASSIS			
BY60110	03	B17	10	0	B14	09	LOGIC CHASSIS			
BY60410	03	B08	37	0	B11	40	LOGIC CHASSIS			
BY60411	03	B11	40	0	B14	33	LOGIC CHASSIS			
0100110	05	A18	21	0	114	44	LOGIC CHASSIS			
0100210	02	A18	24	0	A17	22	LOGIC CHASSIS			
0100310	02	A18	18	0	A17	20	LOGIC CHASSIS			
0100410	03	A18	20	0	A17	37	LOGIC CHASSIS			
0100510	04	A18	17	0	A14	05	LOGIC CHASSIS			
0100610	03	A18	40	0	A19	30	LOGIC CHASSIS			
0100710	05	B18	21	0	B14	44	LOGIC CHASSIS			
0100810	02	B18	24	0	B17	22	LOGIC CHASSIS			
0100910	02	B18	18	0	B17	20	LOGIC CHASSIS			
0101010	03	B18	20	0	B17	37	LOGIC CHASSIS			
0101110	04	B18	17	0	B14	05	LOGIC CHASSIS			
0101210	03	B18	40	0	B19	30	LOGIC CHASSIS			
0200110	02	A25	01	0	A24	08	LOGIC CHASSIS			
0200210	02	A25	05	0	A24	09	LOGIC CHASSIS			
0200310	02	A25	09	0	A24	13	LOGIC CHASSIS			
0200410	02	A25	12	0	A24	16	LOGIC CHASSIS			
0200510	02	A25	16	0	A24	21	LOGIC CHASSIS			
0200610	02	A25	17	0	A24	24	LOGIC CHASSIS			
0200710	05	A25	26	0	A19	44	LOGIC CHASSIS			
0200810	09	A25	34	0	B19	44	LOGIC CHASSIS			
0200910	04	A26	21	0	A30	12	LOGIC CHASSIS			
0201010	04	A26	24	0	A30	14	LOGIC CHASSIS			
0201110	04	A26	28	0	A30	13	LOGIC CHASSIS			
0201210	04	A26	29	0	A30	16	LOGIC CHASSIS			
0201310	04	A26	33	0	A30	17	LOGIC CHASSIS			
0201410	04	A26	34	0	A30	18	LOGIC CHASSIS			
0201510	05	A26	38	0	A30	20	LOGIC CHASSIS			
0201610	05	A26	40	0	A30	22	LOGIC CHASSIS			
0201710	05	A26	44	0	A30	09	LOGIC CHASSIS			
0201810	05	A26	45	0	A30	10	LOGIC CHASSIS			
0201910	06	A27	26	0	A19	44	LOGIC CHASSIS			
0202010	09	A27	34	0	B19	44	LOGIC CHASSIS			
0202110	04	A27	01	0	A24	28	LOGIC CHASSIS			
0202210	04	A27	05	0	A24	29	LOGIC CHASSIS			

IDENT NO	LGTH	ORIGIN		SORT	DESTIN		TITLE	SIZE	COLOR	ECO
0202310	04	A27	09	0	A24	33	LOGIC CHASSIS[			
0202410	04	A27	12	0	A24	34	LOGIC CHASSIS[			
0202510	04	A27	16	0	A24	38	LOGIC CHASSIS[			
0202610	04	A27	17	0	A24	40	LOGIC CHASSIS[			
0202710	05	A28	44	0	A30	05	LOGIC CHASSIS[			
0202810	05	A28	45	0	A30	08	LOGIC CHASSIS[			
0202910	06	A29	01	0	A24	44	LOGIC CHASSIS[			
0203010	06	A29	05	0	A24	45	LOGIC CHASSIS[			
0203110	04	A29	09	0	A26	08	LOGIC CHASSIS[			
0203210	03	A29	12	0	A26	09	LOGIC CHASSIS[			
0203310	02	B25	01	0	B24	08	LOGIC CHASSIS[			
0203410	02	B25	05	0	B24	09	LOGIC CHASSIS[			
0203510	02	B25	09	0	B24	13	LOGIC CHASSIS[			
0203610	02	B25	12	0	B24	16	LOGIC CHASSIS[			
0203710	02	B25	16	0	B24	21	LOGIC CHASSIS[			
0203810	02	B25	17	0	B24	24	LOGIC CHASSIS[			
0203910	08	B25	26	0	A20	36	LOGIC CHASSIS[			
0204010	04	B25	34	0	B20	36	LOGIC CHASSIS[			
0204110	04	B27	01	0	B24	28	LOGIC CHASSIS[			
0204210	04	B27	05	0	B24	29	LOGIC CHASSIS[			
0204310	04	B27	09	0	B24	33	LOGIC CHASSIS[			
0204410	04	B27	12	0	B24	34	LOGIC CHASSIS[			
0204510	04	B27	16	0	B24	38	LOGIC CHASSIS[			
0204610	04	B27	17	0	B24	40	LOGIC CHASSIS[			
0204710	08	B27	26	0	A20	36	LOGIC CHASSIS[			
0204810	05	B27	34	0	B20	36	LOGIC CHASSIS[			
0204910	04	B26	21	0	B30	12	LOGIC CHASSIS[			
0205010	04	B26	24	0	B30	14	LOGIC CHASSIS[			
0205110	04	B26	28	0	B30	13	LOGIC CHASSIS[			
0205210	04	B26	29	0	B30	16	LOGIC CHASSIS[			
0205310	04	B26	33	0	B30	17	LOGIC CHASSIS[			
0205410	04	B26	34	0	B30	18	LOGIC CHASSIS[			
0205510	05	B26	38	0	B30	20	LOGIC CHASSIS[			
0205610	05	B26	40	0	B30	22	LOGIC CHASSIS[			
0205710	05	B26	44	0	B30	09	LOGIC CHASSIS[			
0205810	05	B26	45	0	B30	10	LOGIC CHASSIS[			
0205910	05	B28	44	0	B30	05	LOGIC CHASSIS[			
0206010	05	B28	45	0	B30	08	LOGIC CHASSIS[			
0206110	06	B29	01	0	B24	44	LOGIC CHASSIS[			
0206210	06	B29	05	0	B24	45	LOGIC CHASSIS[			
0206310	03	B29	09	0	B26	08	LOGIC CHASSIS[			
0206410	03	B29	12	0	B26	09	LOGIC CHASSIS[			
0206510	06	A22	13	0	A14	18	LOGIC CHASSIS[			
0206610	03	A22	25	0	A21	34	LOGIC CHASSIS[			
0206710	03	A22	18	0	A21	01	LOGIC CHASSIS[			
0206810	06	B22	13	0	B14	18	LOGIC CHASSIS[			
0206910	03	B22	25	0	B21	34	LOGIC CHASSIS[			
0207010	04	B22	18	0	B21	01	LOGIC CHASSIS[			
0207110	04	A14	26	0	A17	16	LOGIC CHASSIS[			
0207210	04	B14	26	0	B17	16	LOGIC CHASSIS[			

IDENT NO	LGTH	ORIGIN	SORT	DESTIN	TITLE	SIZE	COLOR	ECO
0300110		IJ200 01	X	A25 01	LOGIC CHASSIS		000	
0300210		IJ200 04	X	A25 05	LOGIC CHASSIS		444	
0300310		IJ200 02	X	A25 09	LOGIC CHASSIS		000	
0300410		IJ200 05	X	A25 12	LOGIC CHASSIS		444	
0300510		IJ200 03	X	A25 16	LOGIC CHASSIS		000	
0300610		IJ200 07	X	A25 17	LOGIC CHASSIS		444	
0300710		IJ200 08	X	A27 01	LOGIC CHASSIS		000	
0300810		IJ200 12	X	A27 05	LOGIC CHASSIS		444	
0300910		IJ200 10	X	A27 09	LOGIC CHASSIS		000	
0301010		IJ200 13	X	A27 12	LOGIC CHASSIS		444	
0301110		IJ200 11	X	A27 16	LOGIC CHASSIS		000	
0301210		IJ200 14	X	A27 17	LOGIC CHASSIS		444	
0301310		IJ200 15	X	A29 01	LOGIC CHASSIS		000	
0301410		IJ200 18	X	A29 05	LOGIC CHASSIS		444	
0301510		IJ200 16	X	A29 09	LOGIC CHASSIS		000	
0301610		IJ200 20	X	A29 12	LOGIC CHASSIS		444	
0301710		IJ200 17	X	A25 36	LOGIC CHASSIS		000	
0301810		IJ200 21	X	A25 37	LOGIC CHASSIS		444	
0301910		IJ200 22	X	A27 28	LOGIC CHASSIS		000	
0302010		IJ200 25	X	A27 29	LOGIC CHASSIS		444	
0302110		IJ200 23	X	A25 28	LOGIC CHASSIS		000	
0302210		IJ200 26	X	A25 29	LOGIC CHASSIS		444	
0302310		IJ200 24	X	A27 36	LOGIC CHASSIS		000	
0302410		IJ200 27	X	A27 37	LOGIC CHASSIS		444	
0302510		IJ200 28	X	A25 41	LOGIC CHASSIS		000	
0302610		IJ200 31	X	A25 42	LOGIC CHASSIS		444	
0302710		IJ200 29	X	A27 41	LOGIC CHASSIS		000	
0302810		IJ200 32	X	A27 42	LOGIC CHASSIS		444	
0302910		IJ200 30	X	A28 21	LOGIC CHASSIS		000	
0303010		IJ200 33	X	A28 24	LOGIC CHASSIS		444	
0303110		IJ200 34	X	A28 08	LOGIC CHASSIS		000	
0303210		IJ200 37	X	A28 09	LOGIC CHASSIS		444	
0303310		IJ200 35	X	A28 13	LOGIC CHASSIS		000	
0303410		IJ200 38	X	A28 16	LOGIC CHASSIS		444	
0303510		IJ200 40	X	A25 21	LOGIC CHASSIS		000	
0303610		IJ200 43	X	A25 22	LOGIC CHASSIS		444	
0303710		IJ200 41	X	A27 21	LOGIC CHASSIS		000	
0303810		IJ200 44	X	A27 22	LOGIC CHASSIS		444	
0303910		IJ200 42	X	A29 21	LOGIC CHASSIS		000	
0304010		IJ200 45	X	A29 22	LOGIC CHASSIS		444	
0304110		IJ200 46	X	A29 16	LOGIC CHASSIS		000	
0304210		IJ200 49	X	A29 17	LOGIC CHASSIS		444	
0304310		IJ200 47	X	A29 28	LOGIC CHASSIS		000	
0304410		IJ200 50	X	A29 29	LOGIC CHASSIS		444	
0304510		IJ200 58	X	A28 28	LOGIC CHASSIS		000	
0304610		IJ200 62	X	A28 29	LOGIC CHASSIS		444	
0304710		IJ200 59	X	A28 33	LOGIC CHASSIS		000	
0304810		IJ200 63	X	A28 34	LOGIC CHASSIS		444	
0304910		IJ200 60	X	A28 38	LOGIC CHASSIS		000	
0305010		IJ200 64	X	A28 40	LOGIC CHASSIS		444	

IDENT NO	LGTH	ORIGIN	SORT	DESTIN	TITLE	SIZE	COLOR	ECO
0305110		IJ200 65	X	A29 36	LOGIC CHASSIS		000	
0305210		IJ200 70	X	A29 37	LOGIC CHASSIS		444	
0305310		IJ200 66	X	A26 13	LOGIC CHASSIS		000	
0305410		IJ200 71	X	A26 16	LOGIC CHASSIS		444	
0305510		IJ200 67	X	A29 41	LOGIC CHASSIS		000	
0305610		IJ200 72	X	A29 42	LOGIC CHASSIS		444	
0305710		IJ200 48	X	IJ201 48	LOGIC CHASSIS		000	
0305810		IJ200 51	X	IJ201 51	LOGIC CHASSIS		444	
0305910		IJ200 52	X	IJ201 52	LOGIC CHASSIS		000	
0306010		IJ200 55	X	IJ201 55	LOGIC CHASSIS		444	
0306110		IJ200 73	X	IJ201 73	LOGIC CHASSIS		000	
0306210		IJ200 76	X	IJ201 76	LOGIC CHASSIS		444	
0400110		IJ201 01	X	A24 08	LOGIC CHASSIS		000	
0400210		IJ201 04	X	A24 09	LOGIC CHASSIS		444	
0400310		IJ201 02	X	A24 13	LOGIC CHASSIS		000	
0400410		IJ201 05	X	A24 16	LOGIC CHASSIS		444	
0400510		IJ201 03	X	A24 21	LOGIC CHASSIS		000	
0400610		IJ201 07	X	A24 24	LOGIC CHASSIS		444	
0400710		IJ201 08	X	A24 28	LOGIC CHASSIS		000	
0400810		IJ201 12	X	A24 29	LOGIC CHASSIS		444	
0400910		IJ201 10	X	A24 33	LOGIC CHASSIS		000	
0401010		IJ201 13	X	A24 34	LOGIC CHASSIS		444	
0401110		IJ201 11	X	A24 38	LOGIC CHASSIS		000	
0401210		IJ201 14	X	A24 40	LOGIC CHASSIS		444	
0401310		IJ201 15	X	A24 44	LOGIC CHASSIS		000	
0401410		IJ201 18	X	A24 45	LOGIC CHASSIS		444	
0401510		IJ201 16	X	A26 08	LOGIC CHASSIS		000	
0401610		IJ201 20	X	A26 09	LOGIC CHASSIS		444	
0401710		IJ201 17	X	A25 36	LOGIC CHASSIS		000	
0401810		IJ201 21	X	A25 37	LOGIC CHASSIS		444	
0401910		IJ201 22	X	A27 28	LOGIC CHASSIS		000	
0402010		IJ201 25	X	A27 29	LOGIC CHASSIS		444	
0402110		IJ201 23	X	A25 28	LOGIC CHASSIS		000	
0402210		IJ201 26	X	A25 29	LOGIC CHASSIS		444	
0402310		IJ201 24	X	A27 36	LOGIC CHASSIS		000	
0402410		IJ201 27	X	A27 37	LOGIC CHASSIS		444	
0402510		IJ201 28	X	A25 41	LOGIC CHASSIS		000	
0402610		IJ201 31	X	A25 42	LOGIC CHASSIS		444	
0402710		IJ201 29	X	A27 41	LOGIC CHASSIS		000	
0402810		IJ201 32	X	A27 42	LOGIC CHASSIS		444	
0402910		IJ201 30	X	A28 21	LOGIC CHASSIS		000	
0403010		IJ201 33	X	A28 24	LOGIC CHASSIS		444	
0403110		IJ201 34	X	A28 08	LOGIC CHASSIS		000	
0403210		IJ201 37	X	A28 09	LOGIC CHASSIS		444	
0403310		IJ201 35	X	A28 13	LOGIC CHASSIS		000	
0403410		IJ201 38	X	A28 16	LOGIC CHASSIS		444	
0403510		IJ201 40	X	A25 21	LOGIC CHASSIS		000	
0403610		IJ201 43	X	A25 22	LOGIC CHASSIS		444	
0403710		IJ201 41	X	A27 21	LOGIC CHASSIS		000	
0403810		IJ201 44	X	A27 22	LOGIC CHASSIS		444	

IDENT NO	LGTH	ORIGIN	SORT	DESTIN	TITLE	SIZE	COLOR	ECO
0403910		IJ201 42	X	A29 21	LOGIC CHASSIS		000	
0404010		IJ201 45	X	A29 22	LOGIC CHASSIS		444	
0404110		IJ201 46	X	A29 16	LOGIC CHASSIS		000	
0404210		IJ201 49	X	A29 17	LOGIC CHASSIS		444	
0404310		IJ201 47	X	A29 28	LOGIC CHASSIS		000	
0404410		IJ201 50	X	A29 29	LOGIC CHASSIS		444	
0404510		IJ201 58	X	A28 28	LOGIC CHASSIS		000	
0404610		IJ201 62	X	A28 29	LOGIC CHASSIS		444	
0404710		IJ201 59	X	A28 33	LOGIC CHASSIS		000	
0404810		IJ201 63	X	A28 34	LOGIC CHASSIS		444	
0404910		IJ201 60	X	A28 38	LOGIC CHASSIS		000	
0405010		IJ201 64	X	A28 40	LOGIC CHASSIS		444	
0405110		IJ201 65	X	A29 36	LOGIC CHASSIS		000	
0405210		IJ201 70	X	A29 37	LOGIC CHASSIS		444	
0405310		IJ201 66	X	A26 13	LOGIC CHASSIS		000	
0405410		IJ201 71	X	A26 16	LOGIC CHASSIS		444	
0405510		IJ201 67	X	A29 41	LOGIC CHASSIS		000	
0405610		IJ201 72	X	A29 42	LOGIC CHASSIS		444	
0500110		IJ202 B	X	A26 21	LOGIC CHASSIS		000	
0500210		IJ202 D	X	A26 24	LOGIC CHASSIS		444	
0500310		IJ202 BB	X	A26 28	LOGIC CHASSIS		000	
0500410		IJ202 DD	X	A26 29	LOGIC CHASSIS		444	
0500510		IJ202 E	X	A26 33	LOGIC CHASSIS		000	
0500610		IJ202 H	X	A26 34	LOGIC CHASSIS		444	
0500710		IJ202 EE	X	A26 38	LOGIC CHASSIS		000	
0500810		IJ202 HH	X	A26 40	LOGIC CHASSIS		444	
0500910		IJ202 F	X	A28 44	LOGIC CHASSIS		000	
0501010		IJ202 J	X	A28 45	LOGIC CHASSIS		444	
0501110		IJ202 FF	X	A26 44	LOGIC CHASSIS		000	
0501210		IJ202 JJ	X	A26 45	LOGIC CHASSIS		444	
0600110		IIJ20001	X	B25 01	LOGIC CHASSIS		000	
0600210		IIJ20004	X	B25 05	LOGIC CHASSIS		444	
0600310		IIJ20002	X	B25 09	LOGIC CHASSIS		000	
0600410		IIJ20006	X	B25 12	LOGIC CHASSIS		444	
0600510		IIJ20003	X	B25 16	LOGIC CHASSIS		000	
0600610		IIJ20007	X	B25 17	LOGIC CHASSIS		444	
0600710		IIJ20008	X	B27 01	LOGIC CHASSIS		000	
0600810		IIJ20012	X	B27 05	LOGIC CHASSIS		444	
0600910		IIJ20010	X	B27 09	LOGIC CHASSIS		000	
0601010		IIJ20013	X	B27 12	LOGIC CHASSIS		444	
0601110		IIJ20011	X	B27 16	LOGIC CHASSIS		000	
0601210		IIJ20014	X	B27 17	LOGIC CHASSIS		444	
0601310		IIJ20015	X	B29 01	LOGIC CHASSIS		000	
0601410		IIJ20018	X	B29 05	LOGIC CHASSIS		444	
0601510		IIJ20016	X	B29 09	LOGIC CHASSIS		000	
0601610		IIJ20020	X	B29 12	LOGIC CHASSIS		444	
0601710		IIJ20017	X	B25 36	LOGIC CHASSIS		000	
0601810		IIJ20021	X	B25 37	LOGIC CHASSIS		444	
0601910		IIJ20022	X	B27 28	LOGIC CHASSIS		000	
0602010		IIJ20025	X	B27 29	LOGIC CHASSIS		444	

IDENT NO	LGTH	ORIGIN	SORT	DESTIN		TITLE	SIZE	COLOR	ECO
0602110		IIJ20023	X	B25	28	LOGIC CHASSIS		000	
0602210		IIJ20026	X	B25	29	LOGIC CHASSIS		444	
0602310		IIJ20024	X	B27	36	LOGIC CHASSIS		000	
0602410		IIJ20027	X	B27	37	LOGIC CHASSIS		444	
0602510		IIJ20028	X	B25	41	LOGIC CHASSIS		000	
0602610		IIJ20031	X	B25	42	LOGIC CHASSIS		444	
0602710		IIJ20029	X	B27	41	LOGIC CHASSIS		000	
0602810		IIJ20032	X	B27	42	LOGIC CHASSIS		444	
0602910		IIJ20030	X	B28	21	LOGIC CHASSIS		000	
0603010		IIJ20033	X	B28	24	LOGIC CHASSIS		444	
0603110		IIJ20034	X	B28	08	LOGIC CHASSIS		000	
0603210		IIJ20037	X	B28	09	LOGIC CHASSIS		444	
0603310		IIJ20035	X	B28	13	LOGIC CHASSIS		000	
0603410		IIJ20038	X	B28	16	LOGIC CHASSIS		444	
0603510		IIJ20040	X	B25	21	LOGIC CHASSIS		000	
0603610		IIJ20043	X	B25	22	LOGIC CHASSIS		444	
0603710		IIJ20041	X	B27	21	LOGIC CHASSIS		000	
0603810		IIJ20044	X	B27	22	LOGIC CHASSIS		444	
0603910		IIJ20042	X	B29	21	LOGIC CHASSIS		000	
0604010		IIJ20045	X	B29	22	LOGIC CHASSIS		444	
0604110		IIJ20046	X	B29	16	LOGIC CHASSIS		000	
0604210		IIJ20049	X	B29	17	LOGIC CHASSIS		444	
0604310		IIJ20047	X	B29	28	LOGIC CHASSIS		000	
0604410		IIJ20050	X	B29	29	LOGIC CHASSIS		444	
0604510		IIJ20058	X	B28	28	LOGIC CHASSIS		000	
0604610		IIJ20062	X	B28	29	LOGIC CHASSIS		444	
0604710		IIJ20059	X	B28	33	LOGIC CHASSIS		000	
0604810		IIJ20063	X	B28	34	LOGIC CHASSIS		444	
0604910		IIJ20060	X	B28	38	LOGIC CHASSIS		000	
0605010		IIJ20064	X	B28	40	LOGIC CHASSIS		444	
0605110		IIJ20065	X	B29	36	LOGIC CHASSIS		000	
0605210		IIJ20070	X	B29	37	LOGIC CHASSIS		444	
0605310		IIJ20066	X	B26	13	LOGIC CHASSIS		000	
0605410		IIJ20071	X	B26	16	LOGIC CHASSIS		444	
0605510		IIJ20067	X	B29	41	LOGIC CHASSIS		000	
0605610		IIJ20072	X	B29	42	LOGIC CHASSIS		444	
0605710		IIJ20048	X	IIJ20148		LOGIC CHASSIS		000	
0605810		IIJ20051	X	IIJ20151		LOGIC CHASSIS		444	
0605910		IIJ20052	X	IIJ20152		LOGIC CHASSIS		000	
0606010		IIJ20055	X	IIJ20155		LOGIC CHASSIS		444	
0606110		IIJ20073	X	IIJ20173		LOGIC CHASSIS		000	
0606210		IIJ20076	X	IIJ20176		LOGIC CHASSIS		444	
0700110		IIJ20101	X	B24	08	LOGIC CHASSIS		000	
0700210		IIJ20104	X	B24	09	LOGIC CHASSIS		444	
0700310		IIJ20102	X	B24	13	LOGIC CHASSIS		000	
0700410		IIJ20105	X	B24	16	LOGIC CHASSIS		444	
0700510		IIJ20103	X	B24	21	LOGIC CHASSIS		000	
0700610		IIJ20107	X	B24	24	LOGIC CHASSIS		444	
0700710		IIJ20108	X	B24	28	LOGIC CHASSIS		000	
0700810		IIJ20112	X	B24	29	LOGIC CHASSIS		444	

IDENT NO	LGTH	ORIGIN	SORT	DESTIN	TITLE	SIZE	COLOR	ECO
0700910		IIJ20110	X	B24 33	LOGIC CHASSIS		000	
0701010		IIJ20113	X	B24 34	LOGIC CHASSIS		444	
0701110		IIJ20111	X	B24 38	LOGIC CHASSIS		000	
0701210		IIJ20114	X	B24 40	LOGIC CHASSIS		444	
0701310		IIJ20115	X	B24 44	LOGIC CHASSIS		000	
0701410		IIJ20118	X	B24 45	LOGIC CHASSIS		444	
0701510		IIJ20116	X	B26 08	LOGIC CHASSIS		000	
0701610		IIJ20120	X	B26 09	LOGIC CHASSIS		444	
0701710		IIJ20117	X	B25 36	LOGIC CHASSIS		000	
0701810		IIJ20121	X	B25 37	LOGIC CHASSIS		444	
0701910		IIJ20122	X	B27 28	LOGIC CHASSIS		000	
0702010		IIJ20125	X	B27 29	LOGIC CHASSIS		444	
0702110		IIJ20123	X	B25 28	LOGIC CHASSIS		000	
0702210		IIJ20126	X	B25 29	LOGIC CHASSIS		444	
0702310		IIJ20124	X	B27 36	LOGIC CHASSIS		000	
0702410		IIJ20127	X	B27 37	LOGIC CHASSIS		444	
0702510		IIJ20128	X	B25 41	LOGIC CHASSIS		000	
0702610		IIJ20131	X	B25 42	LOGIC CHASSIS		444	
0702710		IIJ20129	X	B27 41	LOGIC CHASSIS		000	
0702810		IIJ20132	X	B27 42	LOGIC CHASSIS		444	
0702910		IIJ20130	X	B28 21	LOGIC CHASSIS		000	
0703010		IIJ20133	X	B28 24	LOGIC CHASSIS		444	
0703110		IIJ20134	X	B28 08	LOGIC CHASSIS		000	
0703210		IIJ20137	X	B28 09	LOGIC CHASSIS		444	
0703310		IIJ20135	X	B28 13	LOGIC CHASSIS		000	
0703410		IIJ20138	X	B28 16	LOGIC CHASSIS		444	
0703510		IIJ20140	X	B25 21	LOGIC CHASSIS		000	
0703610		IIJ20143	X	B25 22	LOGIC CHASSIS		444	
0703710		IIJ20141	X	B27 21	LOGIC CHASSIS		000	
0703810		IIJ20144	X	B27 22	LOGIC CHASSIS		444	
0703910		IIJ20142	X	B29 21	LOGIC CHASSIS		000	
0704010		IIJ20145	X	B29 22	LOGIC CHASSIS		444	
0704110		IIJ20146	X	B29 16	LOGIC CHASSIS		000	
0704210		IIJ20149	X	B29 17	LOGIC CHASSIS		444	
0704310		IIJ20147	X	B29 28	LOGIC CHASSIS		000	
0704410		IIJ20150	X	B29 29	LOGIC CHASSIS		444	
0704510		IIJ20158	X	B28 28	LOGIC CHASSIS		000	
0704610		IIJ20162	X	B28 29	LOGIC CHASSIS		444	
0704710		IIJ20159	X	B28 33	LOGIC CHASSIS		000	
0704810		IIJ20163	X	B28 34	LOGIC CHASSIS		444	
0704910		IIJ20160	X	B28 38	LOGIC CHASSIS		000	
0705010		IIJ20164	X	B28 40	LOGIC CHASSIS		444	
0705110		IIJ20165	X	B29 36	LOGIC CHASSIS		000	
0705210		IIJ20170	X	B29 37	LOGIC CHASSIS		444	
0705310		IIJ20166	X	B26 13	LOGIC CHASSIS		000	
0705410		IIJ20171	X	B26 16	LOGIC CHASSIS		444	
0705510		IIJ20167	X	B29 41	LOGIC CHASSIS		000	
0705610		IIJ20172	X	B29 42	LOGIC CHASSIS		444	
0800110		IIJ202 B	X	B26 21	LOGIC CHASSIS		000	
0800210		IIJ202 D	X	B26 24	LOGIC CHASSIS		444	

IDENT NO	LGTH	ORIGIN	SORT	DESTIN	TITLE	SIZE	COLOR	ECO
0800310		IIJ202BB	X	B26 28	LOGIC CHASSIS		000	
0800410		IIJ202DD	X	B26 29	LOGIC CHASSIS		444	
0800510		IIJ202 E	X	B26 33	LOGIC CHASSIS		000	
0800610		IIJ202 H	X	B26 34	LOGIC CHASSIS		444	
0800710		IIJ202EE	X	B26 38	LOGIC CHASSIS		000	
0800810		IIJ202HH	X	B26 40	LOGIC CHASSIS		444	
0800910		IIJ202 F	X	B28 44	LOGIC CHASSIS		000	
0801010		IIJ202 J	X	B28 45	LOGIC CHASSIS		444	
0801110		IIJ202FF	X	B26 44	LOGIC CHASSIS		000	
0801210		IIJ202JJ	X	B26 45	LOGIC CHASSIS		444	
0900110	05	A03 45	0	A09 18	LOGIC CHASSIS			
0900210	06	A03 20	0	A11 33	LOGIC CHASSIS			
0900310	06	A03 30	0	A12 45	LOGIC CHASSIS			
0900410	07	A03 32	0	A12 14	LOGIC CHASSIS			
0900510	06	A03 33	0	A12 44	LOGIC CHASSIS			
0900610	06	A03 36	0	A12 42	LOGIC CHASSIS			
0900710	07	A03 37	0	A13 38	LOGIC CHASSIS			
0900810	07	A03 38	0	A13 37	LOGIC CHASSIS			
0900910	07	A03 40	0	A13 36	LOGIC CHASSIS			
0901010	07	A03 41	0	A13 33	LOGIC CHASSIS			
0901110	07	A03 17	0	A12 33	LOGIC CHASSIS			
0901210	04	A03 29	0	A07 16	LOGIC CHASSIS			
0901310	04	A03 25	0	A08 10	LOGIC CHASSIS			
0901510	05	A03 28	0	A08 08	LOGIC CHASSIS			
0901610	07	A03 08	0	A13 10	LOGIC CHASSIS			
0901710	07	A03 05	0	A13 44	LOGIC CHASSIS			
0901810	08	A03 01	0	A13 45	LOGIC CHASSIS			
1000110	05	B03 45	0	B09 18	LOGIC CHASSIS			
1000210	06	B03 20	0	B11 33	LOGIC CHASSIS			
1000310	06	B03 30	0	B12 45	LOGIC CHASSIS			
1000410	07	B03 32	0	B12 14	LOGIC CHASSIS			
1000510	06	B03 33	0	B12 44	LOGIC CHASSIS			
1000610	06	B03 36	0	B12 42	LOGIC CHASSIS			
1000710	07	B03 37	0	B13 38	LOGIC CHASSIS			
1000810	07	B03 38	0	B13 37	LOGIC CHASSIS			
1000910	07	B03 40	0	B13 36	LOGIC CHASSIS			
1001010	07	B03 41	0	B13 33	LOGIC CHASSIS			
1001110	07	B03 17	0	B12 33	LOGIC CHASSIS			
1001210	04	B03 29	0	B07 16	LOGIC CHASSIS			
1001310	04	B03 25	0	B08 10	LOGIC CHASSIS			
1001510	05	B03 28	0	B08 08	LOGIC CHASSIS			
1001610	07	B03 08	0	B13 10	LOGIC CHASSIS			
1001710	07	B03 05	0	B13 44	LOGIC CHASSIS			
1001810	08	B03 01	0	B13 45	LOGIC CHASSIS			
1100010	02	A01 06	R	A02 06	LOGIC CHASSIS	20	666	
1100011	02	A02 06	R	A03 06	LOGIC CHASSIS	20	666	
1100012	02	A03 06	R	A04 06	LOGIC CHASSIS	20	666	
1100013	02	A04 06	R	A05 06	LOGIC CHASSIS	20	666	
1100020	02	A06 06	R	A07 06	LOGIC CHASSIS	20	666	
1100021	02	A07 06	R	A08 06	LOGIC CHASSIS	20	666	

IDENT NO	LGTH	ORIGIN		SORT	DESTIN		TITLE	SIZE	COLOR	ECO
1100022	02	A08	06	R	A09	06	LOGIC CHASSIS	20	666	
1100023	02	A09	06	R	A10	06	LOGIC CHASSIS	20	666	
1100030	02	A12	06	R	A13	06	LOGIC CHASSIS	20	666	
1100031	02	A13	06	R	A14	06	LOGIC CHASSIS	20	666	
1100032	02	A14	06	R	A15	06	LOGIC CHASSIS	20	666	
1100033	02	A15	06	R	A16	06	LOGIC CHASSIS	20	666	
1100034	02	A16	06	R	A17	06	LOGIC CHASSIS	20	666	
1100035	02	A11	06	R	A12	06	LOGIC CHASSIS	20	666	
1100040	02	A18	06	R	A19	06	LOGIC CHASSIS	20	666	
1100041	02	A19	06	R	A20	06	LOGIC CHASSIS	20	666	
1100042	02	A20	06	R	A21	06	LOGIC CHASSIS	20	666	
1100043	02	A21	06	R	A22	06	LOGIC CHASSIS	20	666	
1100044	02	A22	06	R	A23	06	LOGIC CHASSIS	20	666	
1100050	02	A24	06	R	A25	06	LOGIC CHASSIS	20	666	
1100051	02	A25	06	R	A26	06	LOGIC CHASSIS	20	666	
1100060	02	A27	06	R	A28	06	LOGIC CHASSIS	20	666	
1100061	02	A28	06	R	A29	06	LOGIC CHASSIS	20	666	
1100110	02	A01	46	R	A02	46	LOGIC CHASSIS	20	222	
1100111	02	A02	46	R	A03	46	LOGIC CHASSIS	20	222	
1100112	02	A03	46	R	A04	46	LOGIC CHASSIS	20	222	
1100113	02	A04	46	R	A05	46	LOGIC CHASSIS	20	222	
1100120	02	A06	46	R	A07	46	LOGIC CHASSIS	20	222	
1100121	02	A07	46	R	A08	46	LOGIC CHASSIS	20	222	
1100122	02	A08	46	R	A09	46	LOGIC CHASSIS	20	222	
1100123	02	A09	46	R	A10	46	LOGIC CHASSIS	20	222	
1100130	02	A12	46	R	A13	46	LOGIC CHASSIS	20	222	
1100131	02	A13	46	R	A14	46	LOGIC CHASSIS	20	222	
1100132	02	A14	46	R	A15	46	LOGIC CHASSIS	20	222	
1100133	02	A15	46	R	A16	46	LOGIC CHASSIS	20	222	
1100134	02	A16	46	R	A17	46	LOGIC CHASSIS	20	222	
1100135	02	A11	46	R	A12	46	LOGIC CHASSIS	20	222	
1100140	02	A18	46	R	A19	46	LOGIC CHASSIS	20	222	
1100141	02	A19	46	R	A20	46	LOGIC CHASSIS	20	222	
1100142	02	A20	46	R	A21	46	LOGIC CHASSIS	20	222	
1100143	02	A21	46	R	A22	46	LOGIC CHASSIS	20	222	
1100144	02	A22	46	R	A23	46	LOGIC CHASSIS	20	222	
1100150	02	A24	46	R	A25	46	LOGIC CHASSIS	20	222	
1100151	02	A25	46	R	A26	46	LOGIC CHASSIS	20	222	
1100160	02	A27	46	R	A28	46	LOGIC CHASSIS	20	222	
1100161	02	A28	46	R	A29	46	LOGIC CHASSIS	20	222	
1100210	02	A01	48	R	A02	48	LOGIC CHASSIS	20	222	
1100211	02	A02	48	R	A03	48	LOGIC CHASSIS	20	222	
1100212	02	A03	48	R	A04	48	LOGIC CHASSIS	20	222	
1100213	02	A04	48	R	A05	48	LOGIC CHASSIS	20	222	
1100220	02	A06	48	R	A07	48	LOGIC CHASSIS	20	222	
1100221	02	A07	48	R	A08	48	LOGIC CHASSIS	20	222	
1100222	02	A08	48	R	A09	48	LOGIC CHASSIS	20	222	
1100223	02	A09	48	R	A10	48	LOGIC CHASSIS	20	222	
1100230	02	A12	48	R	A13	48	LOGIC CHASSIS	20	222	
1100231	02	A13	48	R	A14	48	LOGIC CHASSIS	20	222	

IDENT NO	LGTH	ORIGIN		SORT	DESTIN		TITLE	SIZE	COLOR	ECO
1100232	02	A14	48	R	A15	48	LOGIC CHASSIS	20	222	
1100233	02	A15	48	R	A16	48	LOGIC CHASSIS	20	222	
1100234	02	A16	48	R	A17	48	LOGIC CHASSIS	20	222	
1100235	02	A11	48	R	A12	48	LOGIC CHASSIS	20	222	
1100243	02	A21	48	R	A22	48	LOGIC CHASSIS	20	222	
1100244	02	A22	48	R	A23	48	LOGIC CHASSIS	20	222	
1100240	02	A18	48	R	A19	48	LOGIC CHASSIS	20	222	
1100241	02	A19	48	R	A20	48	LOGIC CHASSIS	20	222	
1100242	02	A20	48	R	A21	48	LOGIC CHASSIS	20	222	
1100310	02	B01	06	R	B02	06	LOGIC CHASSIS	20	666	
1100311	02	B02	06	R	B03	06	LOGIC CHASSIS	20	666	
1100312	02	B03	06	R	B04	06	LOGIC CHASSIS	20	666	
1100313	02	B04	06	R	B05	06	LOGIC CHASSIS	20	666	
1100320	02	B06	06	R	B07	06	LOGIC CHASSIS	20	666	
1100321	02	B07	06	R	B08	06	LOGIC CHASSIS	20	666	
1100322	02	B08	06	R	B09	06	LOGIC CHASSIS	20	666	
1100323	02	B09	06	R	B10	06	LOGIC CHASSIS	20	666	
1100330	02	B12	06	R	B13	06	LOGIC CHASSIS	20	666	
1100331	02	B13	06	R	B14	06	LOGIC CHASSIS	20	666	
1100332	02	B14	06	R	B15	06	LOGIC CHASSIS	20	666	
1100333	02	B15	06	R	B16	06	LOGIC CHASSIS	20	666	
1100334	02	B16	06	R	B17	06	LOGIC CHASSIS	20	666	
1100335	02	B11	06	R	B12	06	LOGIC CHASSIS	20	666	
1100340	02	B18	06	R	B19	06	LOGIC CHASSIS	20	666	
1100341	02	B19	06	R	B20	06	LOGIC CHASSIS	20	666	
1100342	02	B20	06	R	B21	06	LOGIC CHASSIS	20	666	
1100343	02	B21	06	R	B22	06	LOGIC CHASSIS	20	666	
1100344	02	B22	06	R	B23	06	LOGIC CHASSIS	20	666	
1100350	02	B24	06	R	B25	06	LOGIC CHASSIS	20	666	
1100351	02	B25	06	R	B26	06	LOGIC CHASSIS	20	666	
1100360	02	B27	06	R	B28	06	LOGIC CHASSIS	20	666	
1100361	02	B28	06	R	B29	06	LOGIC CHASSIS	20	666	
1100410	02	B01	46	R	B02	46	LOGIC CHASSIS	20	222	
1100411	02	B02	46	R	B03	46	LOGIC CHASSIS	20	222	
1100412	02	B03	46	R	B04	46	LOGIC CHASSIS	20	222	
1100413	02	B04	46	R	B05	46	LOGIC CHASSIS	20	222	
1100420	02	B06	46	R	B07	46	LOGIC CHASSIS	20	222	
1100421	02	B07	46	R	B08	46	LOGIC CHASSIS	20	222	
1100422	02	B08	46	R	B09	46	LOGIC CHASSIS	20	222	
1100423	02	B09	46	R	B10	46	LOGIC CHASSIS	20	222	
1100430	02	B12	46	R	B13	46	LOGIC CHASSIS	20	222	
1100431	02	B13	46	R	B14	46	LOGIC CHASSIS	20	222	
1100432	02	B14	46	R	B15	46	LOGIC CHASSIS	20	222	
1100433	02	B15	46	R	B16	46	LOGIC CHASSIS	20	222	
1100434	02	B16	46	R	B17	46	LOGIC CHASSIS	20	222	
1100435	02	B11	46	R	B12	46	LOGIC CHASSIS	20	222	
1100440	02	B18	46	R	B19	46	LOGIC CHASSIS	20	222	
1100441	02	B19	46	R	B20	46	LOGIC CHASSIS	20	222	
1100442	02	B20	46	R	B21	46	LOGIC CHASSIS	20	222	
1100443	02	B21	46	R	B22	46	LOGIC CHASSIS	20	222	

IDENT NO	LGTH	ORIGIN		SORT	DESTIN		TITLE	SIZE	COLOR	ECO
1100444	02	B22	46	R	B23	46	LOGIC CHASSIS	20	222	
1100450	02	B24	46	R	B25	46	LOGIC CHASSIS	20	222	
1100451	02	B25	46	R	B26	46	LOGIC CHASSIS	20	222	
1100460	02	B27	46	R	B28	46	LOGIC CHASSIS	20	222	
1100461	02	B28	46	R	B29	46	LOGIC CHASSIS	20	222	
1100510	02	B01	48	R	B02	48	LOGIC CHASSIS	20	222	
1100511	02	B02	48	R	B03	48	LOGIC CHASSIS	20	222	
1100512	02	B03	48	R	B04	48	LOGIC CHASSIS	20	222	
1100513	02	B04	48	R	B05	48	LOGIC CHASSIS	20	222	
1100520	02	B06	48	R	B07	48	LOGIC CHASSIS	20	222	
1100521	02	B07	48	R	B08	48	LOGIC CHASSIS	20	222	
1100522	02	B08	48	R	B09	48	LOGIC CHASSIS	20	222	
1100523	02	B09	48	R	B10	48	LOGIC CHASSIS	20	222	
1100530	02	B12	48	R	B13	48	LOGIC CHASSIS	20	222	
1100531	02	B13	48	R	B14	48	LOGIC CHASSIS	20	222	
1100532	02	B14	48	R	B15	48	LOGIC CHASSIS	20	222	
1100533	02	B15	48	R	B16	48	LOGIC CHASSIS	20	222	
1100534	02	B16	48	R	B17	48	LOGIC CHASSIS	20	222	
1100535	02	B11	48	R	B12	48	LOGIC CHASSIS	20	222	
1100540	02	B18	48	R	B19	48	LOGIC CHASSIS	20	222	
1100541	02	B19	48	R	B20	48	LOGIC CHASSIS	20	222	
1100542	02	B20	48	R	B21	48	LOGIC CHASSIS	20	222	
1100543	02	B21	48	R	B22	48	LOGIC CHASSIS	20	222	
1100544	02	B22	48	R	B23	48	LOGIC CHASSIS	20	222	

END OF DIVISION

MDD LOGIC CHASSIS
LOGIC WIRE LIST

NOTES:

1. FOR MECH ASSY & PL SEE 72994004, 72994005.

2. FOR CP & SCHEMATIC SEE SUB-FINAL ASSY 40068042, 40068142 (1X) OR 40068242, 40068342(2X).

3. INSTALL A SOLID BLACK JUMPER WIRE, FN 76, FROM PIN 2 AND PIN 50 OF EACH CONNECTOR, NUMBER A01 THRU A29 AND B01 THRU B29, TO THE CLOSEST HOLE IN THE CONNECTOR MOUNTING BAR FOR GROUNDING JUMPER FROM:

   A29-02 TO A30-02
   A29-50 TO A30-50
   B29-02 TO B30-02
   B29-50 TO B30-50

   WITH FN 76

4. THESE WIRES ARE PRESENT IN A DUAL CHANNEL UNIT ONLY. (LOGIC CHASSIS 72994004).

5. THESE WIRES ARE PRESENT IN A SINGLE CHANNEL UNIT ONLY. (LOGIC CHASSIS 72994005).

6. CONNECT FN 103 AS SHOWN BELOW:

   TB203-13 TO B12-50
   TB203-16 TO B10-50

ID NO	LENGTH	ORIGIN	S	DESTINATION	TITLE	SIZE/COLOR	ECO
AI10010	04	A21 13	0	A25 08	LOGIC CHASSIS		
AI10011	02	A21 13	0	A21 18	LOGIC CHASSIS		NOTE 5
AI10020	08	A21 12	0	B25 08	LOGIC CHASSIS		
AI10110	04	A21 16	0	A25 13	LOGIC CHASSIS		
AI10111	02	A21 16	0	A21 17	LOGIC CHASSIS		NOTE 5
AI10120	08	A21 08	0	B25 13	LOGIC CHASSIS		
AI10210	04	A21 10	0	A25 18	LOGIC CHASSIS		
AI10211	02	A21 10	0	A21 22	LOGIC CHASSIS		NOTE 5
AI10220	09	A21 05	0	B25 18	LOGIC CHASSIS		
AI10310	05	A21 14	0	A27 08	LOGIC CHASSIS		
AI10311	02	A21 14	0	A21 21	LOGIC CHASSIS		NOTE 5
AI10320	08	A21 09	0	B27 08	LOGIC CHASSIS		
AI10410	05	A21 33	0	A27 13	LOGIC CHASSIS		
AI10411	02	A21 33	0	A21 41	LOGIC CHASSIS		NOTE 5
AI10420	08	A21 32	0	B27 13	LOGIC CHASSIS		
AI10510	05	A21 30	0	A27 18	LOGIC CHASSIS		
AI10511	02	A21 30	0	A21 42	LOGIC CHASSIS		NOTE 5
AI10520	07	A21 40	0	B27 18	LOGIC CHASSIS		
AI10610	06	A21 29	0	A29 08	LOGIC CHASSIS		
AI10611	02	A21 29	0	A21 44	LOGIC CHASSIS		NOTE 5
AI10620	07	A21 38	0	B29 08	LOGIC CHASSIS		
AI10710	06	A21 36	0	A29 13	LOGIC CHASSIS		
AI10711	02	A21 36	0	A21 45	LOGIC CHASSIS		NOTE 5
AI10720	08	A21 37	0	B29 13	LOGIC CHASSIS		
AI10810	04	A21 01	0	A20 25	LOGIC CHASSIS		
AI10910	02	A21 34	0	A19 29	LOGIC CHASSIS		
AI11811	05	A16 44	0	A15 02	LOGIC CHASSIS		NOTE 5
AI11810	09	A16 44	0	B25 38	LOGIC CHASSIS		
AI11820	06	A16 45	0	A25 38	LOGIC CHASSIS		
AI12010	04	A16 41	0	A12 28	LOGIC CHASSIS		
AI12110	06	A16 21	0	A25 44	LOGIC CHASSIS		
AI12210	09	A16 42	0	B25 44	LOGIC CHASSIS		
AI12211	04	A16 42	0	A16 02	LOGIC CHASSIS		NOTE 5
AI20010	07	A17 21	0	A08 42	LOGIC CHASSIS		
AI20020	08	A17 25	0	A29 44	LOGIC CHASSIS		
AI20110	11	A17 29	0	B29 44	LOGIC CHASSIS		
AI20111	02	A17 29	0	A17 02	LOGIC CHASSIS		NOTE 5
AI20120	02	A17 40	0	A17 21	LOGIC CHASSIS		
AI21510	03	A18 22	0	A20 25	LOGIC CHASSIS		
AI21710	04	A18 05	0	A19 29	LOGIC CHASSIS		
AI21810	05	A19 08	0	A25 24	LOGIC CHASSIS		

ID NO	LENGTH	ORIGIN		S	DESTINATION		TITLE	SIZE/COLOR	ECO
AI22110	06	A19	12	0	A27	24	LOGIC CHASSIS		
AI22310	07	A19	14	0	A29	32	LOGIC CHASSIS		
AI22410	03	A19	18	0	A20	32	LOGIC CHASSIS		
AI22411	02	A19	18	0	A19	02	LOGIC CHASSIS		NOTE 5
AI22510	07	A19	40	0	A29	24	LOGIC CHASSIS		
AI22810	07	A19	42	0	A29	18	LOGIC CHASSIS		
AI23010	03	A19	21	0	A18	21	LOGIC CHASSIS		
AI23210	02	A19	34	0	A20	26	LOGIC CHASSIS		
AI23310	09	A20	08	0	B25	24	LOGIC CHASSIS		
AI23410	02	A20	05	0	A19	09	LOGIC CHASSIS		
AI23420	02	A20	01	0	A19	10	LOGIC CHASSIS		
AI23430	02	A20	09	0	A19	05	LOGIC CHASSIS		
AI23440	02	A20	12	0	A19	17	LOGIC CHASSIS		
AI23510	10	A20	10	0	B27	24	LOGIC CHASSIS		
AI23610	10	A20	22	0	B29	32	LOGIC CHASSIS		
AI23710	02	A20	21	0	A19	30	LOGIC CHASSIS		
AI23810	10	A20	13	0	B29	24	LOGIC CHASSIS		
AI23910	04	A20	17	0	A19	37	LOGIC CHASSIS		
AI23920	04	A20	20	0	A19	38	LOGIC CHASSIS		
AI23930	04	A20	14	0	A19	36	LOGIC CHASSIS		
AI23940	04	A20	16	0	A19	41	LOGIC CHASSIS		
AI24010	09	A20	18	0	B29	18	LOGIC CHASSIS		
AI24110	02	A20	29	0	A19	21	LOGIC CHASSIS		
AI24310	03	A20	37	0	A19	26	LOGIC CHASSIS		
AI24410	04	A20	45	0	A19	13	LOGIC CHASSIS		
AI24910	03	A19	24	0	A17	28	LOGIC CHASSIS		
AI25010	04	A20	41	0	A17	30	LOGIC CHASSIS		
AI25110	03	A08	38	0	A09	50	LOGIC CHASSIS		
AI30110	05	A10	09	0	A09	41	LOGIC CHASSIS		
AI30910	02	A10	01	0	A09	05	LOGIC CHASSIS		
AI31310	02	A10	21	0	A11	22	LOGIC CHASSIS		
AI32010	02	A09	21	0	A10	21	LOGIC CHASSIS		
AI32210	03	A09	44	0	A10	25	LOGIC CHASSIS		
AI33010	11	A09	28	0	A27	44	LOGIC CHASSIS		
AI33020	12	A09	29	0	B27	44	LOGIC CHASSIS		
AI33021	03	A09	29	0	A09	02	LOGIC CHASSIS		NOTE 5
AI34510	06	A18	38	0	A09	42	LOGIC CHASSIS		
AI34710	06	A18	16	0	A10	17	LOGIC CHASSIS		
AI34711	03	A10	17	0	A09	25	LOGIC CHASSIS		
AI34910	07	A18	41	0	A09	16	LOGIC CHASSIS		
AI36010	02	A09	01	0	A10	12	LOGIC CHASSIS		

ID NO	LENGTH	ORIGIN		S	DESTINATION		TITLE	SIZE/COLOR	ECO
AI36020	02	A09	09	0	A10	05	LOGIC CHASSIS		
AI36030	02	A09	12	0	A10	20	LOGIC CHASSIS		
AI36040	02	A09	17	0	A10	13	LOGIC CHASSIS		
AI36110	03	A09	20	0	A10	29	LOGIC CHASSIS		
AI36120	02	A09	24	0	A10	22	LOGIC CHASSIS		
AI36130	02	A09	32	0	A10	36	LOGIC CHASSIS		
AI36140	02	A09	36	0	A10	33	LOGIC CHASSIS		
AI36210	03	A09	38	0	A10	45	LOGIC CHASSIS		
AI36220	02	A09	45	0	A10	40	LOGIC CHASSIS		
AI36230	04	A09	34	0	A10	14	LOGIC CHASSIS		
AI36810	06	A09	40	0	A19	32	LOGIC CHASSIS		
AI36811	02	A19	32	0	A20	38	LOGIC CHASSIS		
AI36820	03	A09	37	0	A08	25	LOGIC CHASSIS		
AI40010	11	A12	05	0	B25	32	LOGIC CHASSIS		
AI40011	02	A12	05	0	A12	02	LOGIC CHASSIS		NOTE 5
AI40020	08	A12	08	0	A25	32	LOGIC CHASSIS		
AI40710	05	A12	36	0	A08	09	LOGIC CHASSIS		
AI40720	03	A12	37	0	A14	29	LOGIC CHASSIS		
AI40730	04	A12	32	0	A07	38	LOGIC CHASSIS		
AI40910	03	A13	21	0	A12	10	LOGIC CHASSIS		
AI40911	04	A12	10	0	A08	20	LOGIC CHASSIS		
AI41010	05	A12	09	0	A08	21	LOGIC CHASSIS		
AI41011	03	A12	09	0	A13	24	LOGIC CHASSIS		
AI41210	04	A11	08	0	A12	40	LOGIC CHASSIS		
AI41211	04	A12	40	0	A13	13	LOGIC CHASSIS		
AI41220	05	A11	05	0	A12	41	LOGIC CHASSIS		
AI41221	04	A12	41	0	A13	17	LOGIC CHASSIS		
AI41310	04	A11	01	0	A12	34	LOGIC CHASSIS		
AI41510	04	A11	12	0	A12	38	LOGIC CHASSIS		
AI41511	04	A12	38	0	A13	09	LOGIC CHASSIS		
AI41710	04	A13	45	0	A11	17	LOGIC CHASSIS		
AI41810	03	A13	41	0	A11	29	LOGIC CHASSIS		
AI42210	03	A12	20	0	A13	08	LOGIC CHASSIS		
AI42220	04	A12	21	0	A13	01	LOGIC CHASSIS		
AI42230	02	A12	22	0	A13	18	LOGIC CHASSIS		
AI42710	04	A13	42	0	A11	13	LOGIC CHASSIS		
AI50910	04	A08	16	0	A12	17	LOGIC CHASSIS		
AI50920	04	A08	18	0	A12	12	LOGIC CHASSIS		
AI50930	02	A08	17	0	A09	14	LOGIC CHASSIS		
AI51310	05	A11	41	0	A07	09	LOGIC CHASSIS		
AI51410	04	A11	21	0	A07	25	LOGIC CHASSIS		

ID NO	LENGTH	ORIGIN		S	DESTINATION		TITLE	SIZE/COLOR	ECO
AI52010	06	A07	20	0	A14	38	LOGIC CHASSIS		
AI52020	07	A07	14	0	A17	14	LOGIC CHASSIS		
AI52030	02	A07	21	0	A08	09	LOGIC CHASSIS		
AI52110	04	A11	36	0	A08	13	LOGIC CHASSIS		
AI52210	04	A07	24	0	A11	32	LOGIC CHASSIS		
AI52220	02	A07	32	0	A08	25	LOGIC CHASSIS		
AI52230	03	A07	30	0	A08	16	LOGIC CHASSIS		
AI52310	06	A08	29	0	A17	12	LOGIC CHASSIS		
AI52320	11	A08	28	0	A27	38	LOGIC CHASSIS		
AI52330	13	A08	30	0	B27	38	LOGIC CHASSIS		
AI52331	03	A08	30	0	A08	50	LOGIC CHASSIS		NOTE 5
AI52340	07	A08	32	0	A17	13	LOGIC CHASSIS		
AI60010	11	A08	41	0	A27	32	LOGIC CHASSIS		
AI60020	12	A08	44	0	B27	32	LOGIC CHASSIS		
AI60021	05	A08	44	0	A07	02	LOGIC CHASSIS		NOTE 5
AI60210	06	A15	01	0	A08	33	LOGIC CHASSIS		
AI60610	05	A15	26	0	A08	40	LOGIC CHASSIS		
AI61210	05	A17	22	0	A11	36	LOGIC CHASSIS		
AI62210	05	A14	05	0	A11	44	LOGIC CHASSIS		
AI62310	11	A14	13	0	B01	22	LOGIC CHASSIS		
AI62410	11	A14	16	0	B01	24	LOGIC CHASSIS		
AI62510	11	A14	12	0	B01	21	LOGIC CHASSIS		
AK10010	04	A16	33	0	A21	18	LOGIC CHASSIS		
AK10210	04	A16	25	0	A21	17	LOGIC CHASSIS		
AK10410	04	A16	22	0	A21	22	LOGIC CHASSIS		
AK10610	05	A16	12	0	A21	21	LOGIC CHASSIS		
AK10810	04	A16	37	0	A21	41	LOGIC CHASSIS		
AK11010	04	A16	29	0	A21	42	LOGIC CHASSIS		
AK11210	05	A16	18	0	A21	44	LOGIC CHASSIS		
AK11410	06	A16	08	0	A21	45	LOGIC CHASSIS		
AK20210	03	A19	28	0	A20	44	LOGIC CHASSIS		
AK20310	07	A19	22	0	A29	38	LOGIC CHASSIS		
AK20510	09	A20	40	0	B29	38	LOGIC CHASSIS		
AK30010	04	A09	10	0	A13	32	LOGIC CHASSIS		
AK30210	04	A09	08	0	A13	20	LOGIC CHASSIS		
AK30410	03	A09	14	0	A13	12	LOGIC CHASSIS		
AK30610	05	A09	33	0	A13	05	LOGIC CHASSIS		
AK30810	04	A09	22	0	A12	25	LOGIC CHASSIS		
AK35010	03	A09	13	0	A10	32	LOGIC CHASSIS		
AK40010	04	A13	32	0	A15	05	LOGIC CHASSIS		
AK40210	04	A13	20	0	A15	18	LOGIC CHASSIS		

ID NO	LENGTH	ORIGIN		S	DESTINATION		TITLE	SIZE/COLOR	ECO
AK40410	02	A13	12	0	A15	08	LOGIC CHASSIS		
AK40610	05	A13	05	0	A15	41	LOGIC CHASSIS		
AK40620	03	A13	30	0	A12	13	LOGIC CHASSIS		
AK40710	03	A13	40	0	A12	26	LOGIC CHASSIS		
AK40810	04	A12	25	0	A15	10	LOGIC CHASSIS		
AK41010	04	A12	17	0	A16	29	LOGIC CHASSIS		
AK41210	04	A12	12	0	A14	28	LOGIC CHASSIS		
AK41410	04	A12	01	0	A16	08	LOGIC CHASSIS		
AK50010	03	A14	28	0	A16	18	LOGIC CHASSIS		
AK50020	05	A14	25	0	A08	14	LOGIC CHASSIS		
AK50030	11	A14	14	0	B01	20	LOGIC CHASSIS		
AK50210	04	A07	10	0	A11	16	LOGIC CHASSIS		
AK50211	04	A11	16	0	A13	34	LOGIC CHASSIS		
AK50212	04	A13	34	0	A11	42	LOGIC CHASSIS		
AK50310	02	A07	12	0	A08	05	LOGIC CHASSIS		
AK50311	05	A08	05	0	A13	28	LOGIC CHASSIS		
AK50610	04	A07	26	0	A11	14	LOGIC CHASSIS		
AK50620	04	A07	33	0	A08	13	LOGIC CHASSIS		
AK50710	05	A07	36	0	A11	09	LOGIC CHASSIS		
AK50810	05	A07	42	0	A11	13	LOGIC CHASSIS		
AK50910	05	A07	40	0	A11	10	LOGIC CHASSIS		
AK51110	02	A11	32	0	A12	37	LOGIC CHASSIS		
AK51120	04	A11	37	0	A11	50	LOGIC CHASSIS		
AK60010	04	A15	05	0	A16	33	LOGIC CHASSIS		
AK60210	02	A15	18	0	A16	25	LOGIC CHASSIS		
AK60410	03	A15	08	0	A16	22	LOGIC CHASSIS		
AK60610	04	A15	41	0	A16	12	LOGIC CHASSIS		
AK60810	04	A15	10	0	A16	37	LOGIC CHASSIS		
AK61010	04	A17	36	0	A14	21	LOGIC CHASSIS		
AK61210	05	A17	37	0	A11	33	LOGIC CHASSIS		
AK61410	04	A17	17	0	A14	24	LOGIC CHASSIS		
AK61810	04	A17	24	0	A14	10	LOGIC CHASSIS		
AK62010	04	A17	01	0	A14	17	LOGIC CHASSIS		
AT00010	07	A24	01	0	A16	34	LOGIC CHASSIS		
AT00020	11	A24	05	0	B16	34	LOGIC CHASSIS		
AT00110	06	A24	12	0	A16	26	LOGIC CHASSIS		
AT00120	10	A24	14	0	B16	26	LOGIC CHASSIS		
AT00210	06	A24	17	0	A16	20	LOGIC CHASSIS		
AT00220	09	A24	18	0	B16	20	LOGIC CHASSIS		
AT00310	06	A24	25	0	A16	09	LOGIC CHASSIS		
AT00320	08	A24	26	0	B16	09	LOGIC CHASSIS		

ID NO	LENGTH	ORIGIN		S	DESTINATION		TITLE	SIZE/COLOR	ECO
AT00410	06	A24	30	0	A16	38	LOGIC CHASSIS		
AT00420	09	A24	32	0	B16	38	LOGIC CHASSIS		
AT00510	06	A24	36	0	A16	30	LOGIC CHASSIS		
AT00520	09	A24	37	0	B16	30	LOGIC CHASSIS		
AT00610	07	A24	41	0	A16	16	LOGIC CHASSIS		
AT00620	08	A24	42	0	B16	16	LOGIC CHASSIS		
AT00710	07	A26	01	0	A16	05	LOGIC CHASSIS		
AT00720	10	A26	05	0	B16	05	LOGIC CHASSIS		
AT00810	05	A26	12	0	A20	28	LOGIC CHASSIS		
AT00811	03	A26	12	0	A26	02	LOGIC CHASSIS		NOTE 5
AT00820	10	A26	14	0	B20	28	LOGIC CHASSIS		
AT00821	04	A26	14	0	A25	02	LOGIC CHASSIS		NOTE 5
AT01210	07	A28	01	0	A18	12	LOGIC CHASSIS		
AT01220	10	A28	05	0	B18	12	LOGIC CHASSIS		
AT01310	07	A28	12	0	A18	10	LOGIC CHASSIS		
AT01320	09	A28	14	0	B18	10	LOGIC CHASSIS		
AT01410	07	A28	17	0	A18	13	LOGIC CHASSIS		
AT01420	09	A28	18	0	B18	13	LOGIC CHASSIS		
AT01610	07	A28	25	0	A18	09	LOGIC CHASSIS		
AT01620	09	A28	26	0	B18	09	LOGIC CHASSIS		
AT01710	07	A28	30	0	A19	16	LOGIC CHASSIS		
AT01711	02	A19	16	0	A18	14	LOGIC CHASSIS		
AT01720	08	A28	32	0	B19	16	LOGIC CHASSIS		
AT01721	02	B19	16	0	B18	14	LOGIC CHASSIS		
AT01810	07	A28	36	0	A18	01	LOGIC CHASSIS		
AT01820	08	A28	37	0	B18	01	LOGIC CHASSIS		
AT01910	06	A26	17	0	A18	08	LOGIC CHASSIS		
AT01920	02	A26	18	0	A26	26	LOGIC CHASSIS		
AT02010	08	A26	25	0	B18	08	LOGIC CHASSIS		
AT02020	02	A26	26	0	A26	32	LOGIC CHASSIS		
AT02110	06	A26	30	0	A18	44	LOGIC CHASSIS		
AT02120	02	A26	32	0	A26	37	LOGIC CHASSIS		
AT02210	09	A26	36	0	B18	44	LOGIC CHASSIS		
AT02220	02	A26	37	0	A26	42	LOGIC CHASSIS		
AT02310	02	A28	42	0	A28	50	LOGIC CHASSIS		
AT02310	05	A28	41	0	A22	33	LOGIC CHASSIS		
AT02410	08	A26	41	0	B22	33	LOGIC CHASSIS		
AT02420	02	A26	42	0	A26	50	LOGIC CHASSIS		
AY30110	02	A10	28	0	A10	26	LOGIC CHASSIS		
AY30111	02	A10	26	0	A10	24	LOGIC CHASSIS		
AY30112	04	A10	24	0	A10	08	LOGIC CHASSIS		

ID NO	LENGTH	ORIGIN	S	DESTINATION	TITLE	SIZE/COLOR	ECO
AY30113	02	A10 28	0	A10 34	LOGIC CHASSIS		
AY30114	03	A10 34	0	A10 44	LOGIC CHASSIS		
AY32010	03	A09 30	0	A10 18	LOGIC CHASSIS		
AY36010	04	A09 18	0	A11 44	LOGIC CHASSIS		
AY40410	05	A13 10	0	A07 08	LOGIC CHASSIS		
AY51510	03	A08 24	0	A11 20	LOGIC CHASSIS		
AY51511	06	A11 20	0	A18 37	LOGIC CHASSIS		
AY60110	03	A17 10	0	A14 09	LOGIC CHASSIS		
AY60410	04	A08 37	0	A11 40	LOGIC CHASSIS		
AY60411	03	A11 40	0	A14 33	LOGIC CHASSIS		
BI10010	08	B21 13	0	A25 10	LOGIC CHASSIS		
BI10011	02	B21 13	0	B21 18	LOGIC CHASSIS		NOTE 5
BI10020	04	B21 12	0	B25 10	LOGIC CHASSIS		
BI10110	08	B21 16	0	A25 14	LOGIC CHASSIS		
BI10111	02	B21 16	0	B21 17	LOGIC CHASSIS		NOTE 5
BI10120	04	B21 08	0	B25 14	LOGIC CHASSIS		
BI10210	08	B21 10	0	A25 20	LOGIC CHASSIS		
BI10211	02	B21 10	0	B21 22	LOGIC CHASSIS		NOTE 5
BI10220	04	B21 05	0	B25 20	LOGIC CHASSIS		
BI10310	09	B21 14	0	A27 10	LOGIC CHASSIS		
BI10311	02	B21 14	0	B21 21	LOGIC CHASSIS		NOTE 5
BI10320	05	B21 09	0	B27 10	LOGIC CHASSIS		
BI10410	10	B21 33	0	A27 14	LOGIC CHASSIS		
BI10411	02	B21 33	0	B21 41	LOGIC CHASSIS		NOTE 5
BI10420	05	B21 32	0	B27 14	LOGIC CHASSIS		
BI10510	09	B21 30	0	A27 20	LOGIC CHASSIS		
BI10511	02	B21 30	0	B21 42	LOGIC CHASSIS		NOTE 5
BI10520	05	B21 40	0	B27 20	LOGIC CHASSIS		
BI10610	10	B21 29	0	A29 10	LOGIC CHASSIS		
BI10611	02	B21 29	0	B21 44	LOGIC CHASSIS		NOTE 5
BI10620	06	B21 38	0	B29 10	LOGIC CHASSIS		
BI10710	10	B21 36	0	A29 14	LOGIC CHASSIS		
BI10711	02	B21 36	0	B21 45	LOGIC CHASSIS		NOTE 5
BI10720	06	B21 37	0	B29 14	LOGIC CHASSIS		
BI10810	04	B21 01	0	B20 25	LOGIC CHASSIS		
BI10910	02	B21 34	0	B19 29	LOGIC CHASSIS		
BI11810	09	B16 44	0	B25 40	LOGIC CHASSIS		
BI11811	05	B16 44	0	B15 02	LOGIC CHASSIS		NOTE 5
BI11820	10	B16 45	0	A25 40	LOGIC CHASSIS		
BI12010	04	B16 41	0	B12 28	LOGIC CHASSIS		
BI12110	08	B16 21	0	A25 45	LOGIC CHASSIS		

ID NO	LENGTH	ORIGIN		S	DESTINATION		TITLE	SIZE/COLOR	ECO
BI12210	07	B16	42	0	B25	45	LOGIC CHASSIS		
BI12211	04	B16	42	0	B16	02	LOGIC CHASSIS		NOTE 5
BI20010	07	B17	21	0	B08	42	LOGIC CHASSIS		
BI20020	09	B17	25	0	A29	45	LOGIC CHASSIS		
BI20110	08	B17	29	0	B29	45	LOGIC CHASSIS		
BI20111	03	B17	29	0	B17	02	LOGIC CHASSIS		NOTE 5
BI20120	02	B17	40	0	B17	21	LOGIC CHASSIS		
BI21510	03	B18	22	0	B20	25	LOGIC CHASSIS		
BI21710	04	B18	05	0	B19	29	LOGIC CHASSIS		
BI21810	07	B19	08	0	A25	25	LOGIC CHASSIS		
BI22110	08	B19	12	0	A27	25	LOGIC CHASSIS		
BI22310	08	B19	14	0	A29	33	LOGIC CHASSIS		
BI22410	03	B19	18	0	B20	32	LOGIC CHASSIS		
BI22411	02	B19	18	0	B19	02	LOGIC CHASSIS		NOTE 5
BI22510	10	B19	40	0	A29	25	LOGIC CHASSIS		
BI22810	11	B19	42	0	A29	20	LOGIC CHASSIS		
BI23010	02	B19	21	0	B18	21	LOGIC CHASSIS		
BI23210	02	B19	34	0	B20	26	LOGIC CHASSIS		
BI23310	05	B20	08	0	B25	25	LOGIC CHASSIS		
BI23410	02	B20	05	0	B19	09	LOGIC CHASSIS		
BI23420	02	B20	01	0	B19	10	LOGIC CHASSIS		
BI23430	02	B20	09	0	B19	05	LOGIC CHASSIS		
BI23440	02	B20	12	0	B19	17	LOGIC CHASSIS		
BI23510	06	B20	10	0	B27	25	LOGIC CHASSIS		
BI23610	07	B20	22	0	B29	33	LOGIC CHASSIS		
BI23710	02	B20	21	0	B19	30	LOGIC CHASSIS		
BI23810	07	B20	13	0	B29	25	LOGIC CHASSIS		
BI23910	04	B20	17	0	B19	37	LOGIC CHASSIS		
BI23920	04	B20	20	0	B19	38	LOGIC CHASSIS		
BI23930	04	B20	14	0	B19	36	LOGIC CHASSIS		
BI23940	04	B20	16	0	B19	41	LOGIC CHASSIS		
BI24010	07	B20	18	0	B29	20	LOGIC CHASSIS		
BI24110	02	B20	29	0	B19	21	LOGIC CHASSIS		
BI24310	03	B20	37	0	B19	26	LOGIC CHASSIS		
BI24410	04	B20	45	0	B19	13	LOGIC CHASSIS		
BI24910	03	B19	24	0	B17	28	LOGIC CHASSIS		
BI25010	03	B20	41	0	B17	30	LOGIC CHASSIS		
BI25110	03	B08	38	0	B09	50	LOGIC CHASSIS		
BI30110	04	B10	09	0	B09	41	LOGIC CHASSIS		
BI30910	02	B10	01	0	B09	05	LOGIC CHASSIS		
BI31310	02	B10	21	0	B11	22	LOGIC CHASSIS		

ID NO	LENGTH	ORIGIN	S	DESTINATION	TITLE	SIZE/COLOR	ECO
BI32010	02	B09 21	0	B10 21	LOGIC CHASSIS		
BI32210	03	B09 44	0	B10 25	LOGIC CHASSIS		
BI33010	12	B09 28	0	A27 45	LOGIC CHASSIS		
BI33020	11	B09 29	0	B27 45	LOGIC CHASSIS		
BI33021	03	B09 29	0	B09 02	LOGIC CHASSIS		NOTE 5
BI34510	06	B18 38	0	B09 42	LOGIC CHASSIS		
BI34710	06	B18 16	0	B10 17	LOGIC CHASSIS		
BI34711	03	B10 17	0	B09 25	LOGIC CHASSIS		
BI34910	07	B18 41	0	B09 16	LOGIC CHASSIS		
BI36010	02	B09 01	0	B10 12	LOGIC CHASSIS		
BI36020	02	B09 09	0	B10 05	LOGIC CHASSIS		
BI36030	02	B09 12	0	B10 20	LOGIC CHASSIS		
BI36040	02	B09 17	0	B10 13	LOGIC CHASSIS		
BI36110	03	B09 20	0	B10 29	LOGIC CHASSIS		
BI36120	02	B09 24	0	B10 22	LOGIC CHASSIS		
BI36130	02	B09 32	0	B10 36	LOGIC CHASSIS		
BI36140	02	B09 36	0	B10 33	LOGIC CHASSIS		
BI36210	02	B09 38	0	B10 45	LOGIC CHASSIS		
BI36220	02	B09 45	0	B10 40	LOGIC CHASSIS		
BI36230	04	B09 34	0	B10 14	LOGIC CHASSIS		
BI36810	07	B09 40	0	B19 32	LOGIC CHASSIS		
BI36811	02	B19 32	0	B20 38	LOGIC CHASSIS		
BI36820	03	B09 37	0	B08 25	LOGIC CHASSIS		
BI40010	09	B12 05	0	B25 33	LOGIC CHASSIS		
BI40011	02	B12 05	0	B12 02	LOGIC CHASSIS		NOTE 5
BI40020	09	B12 08	0	A25 33	LOGIC CHASSIS		
BI40710	05	B12 36	0	B08 09	LOGIC CHASSIS		
BI40720	03	B12 37	0	B14 29	LOGIC CHASSIS		
BI40730	04	B12 32	0	B07 38	LOGIC CHASSIS		
BI40910	03	B13 21	0	B12 10	LOGIC CHASSIS		
BI40911	04	B12 10	0	B08 20	LOGIC CHASSIS		
BI41010	05	B12 09	0	B08 21	LOGIC CHASSIS		
BI41011	03	B12 09	0	B13 24	LOGIC CHASSIS		
BI41210	05	B11 08	0	B12 40	LOGIC CHASSIS		
BI41211	04	B12 40	0	B13 13	LOGIC CHASSIS		
BI41220	05	B11 05	0	B12 41	LOGIC CHASSIS		
BI41221	04	B12 41	0	B13 17	LOGIC CHASSIS		
BI41310	04	B11 01	0	B12 34	LOGIC CHASSIS		
BI41510	04	B11 12	0	B12 38	LOGIC CHASSIS		
BI41511	04	B12 38	0	B13 09	LOGIC CHASSIS		
BI41710	04	B13 45	0	B11 17	LOGIC CHASSIS		

ID NO	LENGTH	ORIGIN		S	DESTINATION		TITLE	SIZE/COLOR	ECO
BI41810	03	B13	41	0	B11	29	LOGIC CHASSIS		
BI42210	03	B12	20	0	B13	08	LOGIC CHASSIS		
BI42220	04	B12	21	0	B13	01	LOGIC CHASSIS		
BI42230	02	B12	22	0	B13	18	LOGIC CHASSIS		
BI42710	04	B13	42	0	B11	13	LOGIC CHASSIS		
BI50910	04	B08	16	0	B12	17	LOGIC CHASSIS		
BI50920	04	B08	18	0	B12	12	LOGIC CHASSIS		
BI50930	02	B08	17	0	B09	14	LOGIC CHASSIS		
BI51310	05	B11	41	0	B07	09	LOGIC CHASSIS		
BI51410	04	B11	21	0	B07	25	LOGIC CHASSIS		
BI52010	06	B07	20	0	B14	38	LOGIC CHASSIS		
BI52020	07	B07	14	0	B17	14	LOGIC CHASSIS		
BI52030	03	B07	21	0	B08	09	LOGIC CHASSIS		
BI52110	04	B11	36	0	B08	13	LOGIC CHASSIS		
BI52210	04	B07	24	0	B11	32	LOGIC CHASSIS		
BI52220	03	B07	32	0	B08	25	LOGIC CHASSIS		
BI52230	03	B07	30	0	B08	16	LOGIC CHASSIS		
BI52310	06	B08	29	0	B17	12	LOGIC CHASSIS		
BI52320	12	B08	28	0	A27	40	LOGIC CHASSIS		
BI52330	11	B08	30	0	B27	40	LOGIC CHASSIS		
BI52331	03	B08	30	0	B08	50	LOGIC CHASSIS		NOTE 5
BI52340	07	B08	32	0	B17	13	LOGIC CHASSIS		
BI60010	12	B08	41	0	A27	33	LOGIC CHASSIS		
BI60020	11	B08	44	0	B27	33	LOGIC CHASSIS		
BI60021	05	B08	44	0	B07	02	LOGIC CHASSIS		NOTE 5
BI60210	06	B15	01	0	B08	33	LOGIC CHASSIS		
BI60610	05	B15	26	0	B08	40	LOGIC CHASSIS		
BI61210	05	B17	22	0	B11	36	LOGIC CHASSIS		
BI62210	05	B14	05	0	B11	44	LOGIC CHASSIS		
BI62310	11	B14	13	0	A01	22	LOGIC CHASSIS		
BI62410	11	B14	16	0	A01	24	LOGIC CHASSIS		
BI62510	11	B14	12	0	A01	21	LOGIC CHASSIS		
BK10010	04	B16	33	0	B21	18	LOGIC CHASSIS		
BK10210	04	B16	25	0	B21	17	LOGIC CHASSIS		
BK10410	04	B16	22	0	B21	22	LOGIC CHASSIS		
BK10610	05	B16	12	0	B21	21	LOGIC CHASSIS		
BK10810	04	B16	37	0	B21	41	LOGIC CHASSIS		
BK11010	04	B16	29	0	B21	42	LOGIC CHASSIS		
BK11210	05	B16	18	0	B21	44	LOGIC CHASSIS		
BK11410	06	B16	08	0	B21	45	LOGIC CHASSIS		
BK20210	03	B19	28	0	B20	44	LOGIC CHASSIS		

ID NO	LENGTH	ORIGIN	S	DESTINATION	TITLE	SIZE/COLOR	ECO
BK20310	08	B19 22	0	A29 40	LOGIC CHASSIS		
BK20510	06	B20 40	0	B29 40	LOGIC CHASSIS		
BK30010	04	B09 10	0	B13 32	LOGIC CHASSIS		
BK30210	04	B09 08	0	B13 20	LOGIC CHASSIS		
BK30410	03	B09 14	0	B13 12	LOGIC CHASSIS		
BK30610	05	B09 33	0	B13 05	LOGIC CHASSIS		
BK30810	04	B09 22	0	B12 25	LOGIC CHASSIS		
BK35010	03	B09 13	0	B10 32	LOGIC CHASSIS		
BK40010	04	B13 32	0	B15 05	LOGIC CHASSIS		
BK40210	04	B13 20	0	B15 18	LOGIC CHASSIS		
BK40410	02	B13 12	0	B15 08	LOGIC CHASSIS		
BK40610	05	B13 05	0	B15 41	LOGIC CHASSIS		
BK40620	03	B13 30	0	B12 13	LOGIC CHASSIS		
BK40710	03	B13 40	0	B12 26	LOGIC CHASSIS		
BK40810	04	B12 25	0	B15 10	LOGIC CHASSIS		
BK41010	04	B12 17	0	B16 29	LOGIC CHASSIS		
BK41210	04	B12 12	0	B14 28	LOGIC CHASSIS		
BK41410	04	B12 01	0	B16 08	LOGIC CHASSIS		
BK50010	03	B14 28	0	B16 18	LOGIC CHASSIS		
BK50020	05	B14 25	0	B08 14	LOGIC CHASSIS		
BK50030	11	B14 14	0	A01 20	LOGIC CHASSIS		
BK50210	04	B07 10	0	B11 16	LOGIC CHASSIS		
BK50211	04	B11 16	0	B13 34	LOGIC CHASSIS		
BK50212	04	B13 34	0	B11 42	LOGIC CHASSIS		
BK50310	02	B07 12	0	B08 05	LOGIC CHASSIS		
BK50311	05	B08 05	0	B13 28	LOGIC CHASSIS		
BK50610	04	B07 26	0	B11 14	LOGIC CHASSIS		
BK50620	04	B07 33	0	B08 13	LOGIC CHASSIS		
BK50710	05	B07 36	0	B11 09	LOGIC CHASSIS		
BK50810	05	B07 42	0	B11 13	LOGIC CHASSIS		
BK50910	05	B07 40	0	B11 10	LOGIC CHASSIS		
BK51110	02	B11 32	0	B12 37	LOGIC CHASSIS		
BK51120	03	B11 37	0	B11 50	LOGIC CHASSIS		
BK60010	04	B15 05	0	B16 33	LOGIC CHASSIS		
BK60210	02	B15 18	0	B16 25	LOGIC CHASSIS		
BK60410	03	B15 08	0	B16 22	LOGIC CHASSIS		
BK60610	04	B15 41	0	B16 12	LOGIC CHASSIS		
BK60810	04	B15 10	0	B16 37	LOGIC CHASSIS		
BK61010	03	B17 36	0	B14 21	LOGIC CHASSIS		
BK61210	05	B17 37	0	B11 33	LOGIC CHASSIS		
BK61410	04	B17 17	0	B14 24	LOGIC CHASSIS		

ID NO	LENGTH	ORIGIN	S	DESTINATION	TITLE	SIZE/COLOR	ECO
BK61810	04	B17 24	0	B14 10	LOGIC CHASSIS		
BK62010	04	B17 01	0	B14 17	LOGIC CHASSIS		
BT00010	08	B24 01	0	A16 36	LOGIC CHASSIS		
BT00020	07	B24 05	0	B16 36	LOGIC CHASSIS		
BT00110	08	B24 12	0	A16 28	LOGIC CHASSIS		
BT00120	06	B24 14	0	B16 28	LOGIC CHASSIS		
BT00210	09	B24 17	0	A16 17	LOGIC CHASSIS		
BT00220	06	B24 18	0	B16 17	LOGIC CHASSIS		
BT00310	10	B24 25	0	A16 10	LOGIC CHASSIS		
BT00320	06	B24 26	0	B16 10	LOGIC CHASSIS		
BT00410	08	B24 30	0	A16 40	LOGIC CHASSIS		
BT00420	06	B24 32	0	B16 40	LOGIC CHASSIS		
BT00510	09	B24 36	0	A16 32	LOGIC CHASSIS		
BT00520	06	B24 37	0	B16 32	LOGIC CHASSIS		
BT00610	11	B24 41	0	A16 13	LOGIC CHASSIS		
BT00620	06	B24 42	0	B16 13	LOGIC CHASSIS		
BT00710	09	B26 01	0	A16 01	LOGIC CHASSIS		
BT00720	06	B26 05	0	B16 01	LOGIC CHASSIS		
BT00810	08	B26 12	0	A19 25	LOGIC CHASSIS		
BT00811	03	B26 12	0	B26 02	LOGIC CHASSIS		NOTE 5
BT00820	05	B26 14	0	B19 25	LOGIC CHASSIS		
BT00821	04	B26 14	0	B25 02	LOGIC CHASSIS		NOTE 5
BT01210	08	B28 01	0	A18 32	LOGIC CHASSIS		
BT01220	07	B28 05	0	B18 32	LOGIC CHASSIS		
BT01310	09	B28 12	0	A18 29	LOGIC CHASSIS		
BT01320	07	B28 14	0	B18 29	LOGIC CHASSIS		
BT01410	09	B28 17	0	A18 26	LOGIC CHASSIS		
BT01420	07	B28 18	0	B18 26	LOGIC CHASSIS		
BT01610	10	B28 25	0	A18 30	LOGIC CHASSIS		
BT01620	07	B28 26	0	B18 30	LOGIC CHASSIS		
BT01710	10	B28 30	0	A20 24	LOGIC CHASSIS		
BT01711	04	A20 24	0	A18 33	LOGIC CHASSIS		
BT01720	06	B28 32	0	B20 24	LOGIC CHASSIS		
BT01721	03	B20 24	0	B18 33	LOGIC CHASSIS		
BT01810	10	B28 36	0	A18 34	LOGIC CHASSIS		
BT01820	07	B28 37	0	B18 34	LOGIC CHASSIS		
BT01910	09	B26 17	0	A18 25	LOGIC CHASSIS		
BT01920	02	B26 18	0	B26 26	LOGIC CHASSIS		
BT02010	06	B26 25	0	B18 25	LOGIC CHASSIS		
BT02020	02	B26 26	0	B26 32	LOGIC CHASSIS		
BT02110	09	B26 30	0	A20 33	LOGIC CHASSIS		

ID NO	LENGTH	ORIGIN	S	DESTINATION	TITLE	SIZE/COLOR	ECO
BT02111	02	A20 33	0	A18 45	LOGIC CHASSIS		
BT02120	02	B26 32	0	B26 37	LOGIC CHASSIS		
BT02210	05	B26 36	0	B20 33	LOGIC CHASSIS		
BT02211	02	B20 33	0	B18 45	LOGIC CHASSIS		
BT02220	02	B26 37	0	B26 42	LOGIC CHASSIS		
BT02310	10	B28 41	0	A22 21	LOGIC CHASSIS		
BT02320	02	B28 42	0	B28 50	LOGIC CHASSIS		
BT02410	05	B26 41	0	B22 21	LOGIC CHASSIS		
BT02420	02	B26 42	0	B26 50	LOGIC CHASSIS		
BY30110	02	B10 28	0	B10 26	LOGIC CHASSIS		
BY30111	02	B10 26	0	B10 24	LOGIC CHASSIS		
BY30112	04	B10 24	0	B10 08	LOGIC CHASSIS		
BY30113	02	B10 28	0	B10 34	LOGIC CHASSIS		
BY30114	02	B10 34	0	B10 44	LOGIC CHASSIS		
BY32010	03	B09 30	0	B10 18	LOGIC CHASSIS		
BY36010	04	B09 18	0	B11 44	LOGIC CHASSIS		
BY40410	05	B13 10	0	B07 08	LOGIC CHASSIS		
BY51510	03	B08 24	0	B11 20	LOGIC CHASSIS		
BY51511	06	B11 20	0	B18 37	LOGIC CHASSIS		
BY60110	03	B17 10	0	B14 09	LOGIC CHASSIS		
BY60410	03	B08 37	0	B11 40	LOGIC CHASSIS		
BY60411	03	B11 40	0	B14 33	LOGIC CHASSIS		
0100110	05	A18 21	0	114 44	LOGIC CHASSIS		
0100210	02	A18 24	0	A17 22	LOGIC CHASSIS		
0100310	02	A18 18	0	A17 20	LOGIC CHASSIS		
0100410	03	A18 20	0	A17 37	LOGIC CHASSIS		
0100510	04	A18 17	0	A14 05	LOGIC CHASSIS		
0100610	03	A18 40	0	A19 30	LOGIC CHASSIS		
0100710	05	B18 21	0	B14 44	LOGIC CHASSIS		
0100810	02	B18 24	0	B17 22	LOGIC CHASSIS		
0100910	02	B18 18	0	B17 20	LOGIC CHASSIS		
0101010	03	B18 20	0	B17 37	LOGIC CHASSIS		
0101110	04	B18 17	0	B14 05	LOGIC CHASSIS		
0101210	03	B18 40	0	B19 30	LOGIC CHASSIS		
0200110	02	A25 01	0	A24 08	LOGIC CHASSIS		
0200210	02	A25 05	0	A24 09	LOGIC CHASSIS		
0200310	02	A25 09	0	A24 13	LOGIC CHASSIS		
0200410	02	A25 12	0	A24 16	LOGIC CHASSIS		
0200510	02	A25 16	0	A24 21	LOGIC CHASSIS		
0200610	02	A25 17	0	A24 24	LOGIC CHASSIS		
0200710	05	A25 26	0	A19 44	LOGIC CHASSIS		

ID NO	LENGTH	ORIGIN	S	DESTINATION	TITLE	SIZE/COLOR	ECO
0200810	09	A25 34	0	B19 44	LOGIC CHASSIS		
0200910	04	A26 21	0	A30 12	LOGIC CHASSIS		
0201010	04	A26 24	0	A30 14	LOGIC CHASSIS		
0201110	04	A26 28	0	A30 13	LOGIC CHASSIS		
0201210	04	A26 29	0	A30 16	LOGIC CHASSIS		
0201310	04	A26 33	0	A30 17	LOGIC CHASSIS		
0201410	04	A26 34	0	A30 18	LOGIC CHASSIS		
0201510	05	A26 38	0	A30 20	LOGIC CHASSIS		
0201610	05	A26 40	0	A30 22	LOGIC CHASSIS		
0201710	05	A26 44	0	A30 09	LOGIC CHASSIS		
0201810	05	A26 45	0	A30 10	LOGIC CHASSIS		
0201910	06	A27 26	0	A19 44	LOGIC CHASSIS		
0202010	09	A27 34	0	B19 44	LOGIC CHASSIS		
0202110	04	A27 01	0	A24 28	LOGIC CHASSIS		
0202210	04	A27 05	0	A24 29	LOGIC CHASSIS		
0202310	04	A27 09	0	A24 33	LOGIC CHASSIS		
0202410	04	A27 12	0	A24 34	LOGIC CHASSIS		
0202510	04	A27 16	0	A24 38	LOGIC CHASSIS		
0202610	04	A27 17	0	A24 40	LOGIC CHASSIS		
0202710	05	A28 44	0	A30 05	LOGIC CHASSIS		
0202810	05	A28 45	0	A30 08	LOGIC CHASSIS		
0202910	06	A29 01	0	A24 44	LOGIC CHASSIS		
0203010	06	A29 05	0	A24 45	LOGIC CHASSIS		
0203110	04	A29 09	0	A26 08	LOGIC CHASSIS		
0203210	03	A29 12	0	A26 09	LOGIC CHASSIS		
0203310	02	B25 01	0	B24 08	LOGIC CHASSIS		
0203410	02	B25 05	0	B24 09	LOGIC CHASSIS		
0203510	02	B25 09	0	B24 13	LOGIC CHASSIS		
0203610	02	B25 12	0	B24 16	LOGIC CHASSIS		
0203710	02	B25 16	0	B24 21	LOGIC CHASSIS		
0203810	02	B25 17	0	B24 24	LOGIC CHASSIS		
0203910	08	B25 26	0	A20 36	LOGIC CHASSIS		
0204010	04	B25 34	0	B20 36	LOGIC CHASSIS		
0204110	04	B27 01	0	B24 28	LOGIC CHASSIS		
0204210	04	B27 05	0	B24 29	LOGIC CHASSIS		
0204310	04	B27 09	0	B24 33	LOGIC CHASSIS		
0204410	04	B27 12	0	B24 34	LOGIC CHASSIS		
0204510	04	B27 16	0	B24 38	LOGIC CHASSIS		
0204610	04	B27 17	0	B24 40	LOGIC CHASSIS		
0204710	08	B27 26	0	A20 36	LOGIC CHASSIS		
0204810	05	B27 34	0	B20 36	LOGIC CHASSIS		

ID NO	LENGTH	ORIGIN		S	DESTINATION		TITLE	SIZE/COLOR	ECO
0204910	04	B26	21	0	B30	12	LOGIC CHASSIS		
0205010	04	B26	24	0	B30	14	LOGIC CHASSIS		
0205110	04	B26	28	0	B30	13	LOGIC CHASSIS		
0205210	04	B26	29	0	B30	16	LOGIC CHASSIS		
0205310	04	B26	33	0	B30	17	LOGIC CHASSIS		
0205410	04	B26	34	0	B30	18	LOGIC CHASSIS		
0205510	05	B26	38	0	B30	20	LOGIC CHASSIS		
0205610	05	B26	40	0	B30	22	LOGIC CHASSIS		
0205710	05	B26	44	0	B30	09	LOGIC CHASSIS		
0205810	05	B26	45	0	B30	10	LOGIC CHASSIS		
0205910	05	B28	44	0	B30	05	LOGIC CHASSIS		
0206010	05	B28	45	0	B30	08	LOGIC CHASSIS		
0206110	06	B29	01	0	B24	44	LOGIC CHASSIS		
0206210	06	B29	05	0	B24	45	LOGIC CHASSIS		
0206310	03	B29	09	0	B26	08	LOGIC CHASSIS		
0206410	03	B29	12	0	B26	09	LOGIC CHASSIS		
0206510	06	A22	13	0	A14	18	LOGIC CHASSIS		
0206710	03	A22	18	0	A21	01	LOGIC CHASSIS		
0206810	06	B22	13	0	B14	18	LOGIC CHASSIS		
0206910	03	B22	25	0	B21	34	LOGIC CHASSIS		
0207010	04	B22	18	0	B21	01	LOGIC CHASSIS		
0207110	04	A14	26	0	A17	16	LOGIC CHASSIS		
0207210	04	B14	26	0	B17	16	LOGIC CHASSIS		
0300110		IJ200	01	X	A25	01	LOGIC CHASSIS		
0300210		IJ200	04	X	A25	05	LOGIC CHASSIS		
0300310		IJ200	02	X	A25	09	LOGIC CHASSIS		
0300410		IJ200	05	X	A25	12	LOGIC CHASSIS		
0300510		IJ200	03	X	A25	16	LOGIC CHASSIS		
0300610		IJ200	07	X	A25	17	LOGIC CHASSIS		
0300710		IJ200	08	X	A27	01	LOGIC CHASSIS		
0300810		IJ200	12	X	A27	05	LOGIC CHASSIS		
0300910		IJ200	10	X	A27	09	LOGIC CHASSIS		
0301010		IJ200	13	X	A27	12	LOGIC CHASSIS		
0301110		IJ200	11	X	A27	16	LOGIC CHASSIS		
0301210		IJ200	14	X	A27	17	LOGIC CHASSIS		
0301310		IJ200	15	X	A29	01	LOGIC CHASSIS		
0301410		IJ200	18	X	A29	05	LOGIC CHASSIS		
0301510		IJ200	16	X	A29	09	LOGIC CHASSIS		
0301610		IJ200	20	X	A29	12	LOGIC CHASSIS		
0301710		IJ200	17	X	A25	36	LOGIC CHASSIS		

ID NOs 0207310 thru 0209070 can be found on page 9-26.49

ID NO	LENGTH	ORIGIN	S	DESTINATION	TITLE	SIZE/COLOR	ECO
0301810		IJ200 21	X	A25 37	LOGIC CHASSIS		
0301910		IJ200 22	X	A27 28	LOGIC CHASSIS		
0302010		IJ200 25	X	A27 29	LOGIC CHASSIS		
0302110		IJ200 23	X	A25 28	LOGIC CHASSIS		
0302210		IJ200 26	X	A25 29	LOGIC CHASSIS		
0302310		IJ200 24	X	A27 36	LOGIC CHASSIS		
0302410		IJ200 27	X	A27 37	LOGIC CHASSIS		
0302510		IJ200 28	X	A25 41	LOGIC CHASSIS		
0302610		IJ200 31	X	A25 42	LOGIC CHASSIS		
0302710		IJ200 29	X	A27 41	LOGIC CHASSIS		
0302810		IJ200 32	X	A27 42	LOGIC CHASSIS		
0302910		IJ200 30	X	A28 21	LOGIC CHASSIS		
0303010		IJ200 33	X	A28 24	LOGIC CHASSIS		
0303110		IJ200 34	X	A28 08	LOGIC CHASSIS		
0303210		IJ200 37	X	A28 09	LOGIC CHASSIS		
0303310		IJ200 35	X	A28 13	LOGIC CHASSIS		
0303410		IJ200 38	X	A28 16	LOGIC CHASSIS		
0303510		IJ200 40	X	A25 21	LOGIC CHASSIS		
0303610		IJ200 43	X	A25 22	LOGIC CHASSIS		
0303710		IJ200 41	X	A27 21	LOGIC CHASSIS		
0303810		IJ200 44	X	A27 22	LOGIC CHASSIS		
0303910		IJ200 42	X	A29 21	LOGIC CHASSIS		
0304010		IJ200 45	X	A29 22	LOGIC CHASSIS		
0304110		IJ200 46	X	A29 16	LOGIC CHASSIS		
0304210		IJ200 49	X	A29 17	LOGIC CHASSIS		
0304310		IJ200 47	X	A29 28	LOGIC CHASSIS		
0304410		IJ200 50	X	A29 29	LOGIC CHASSIS		
0304510		IJ200 58	X	A28 28	LOGIC CHASSIS		
0304610		IJ200 62	X	A28 29	LOGIC CHASSIS		
0304710		IJ200 59	X	A28 33	LOGIC CHASSIS		
0304810		IJ200 63	X	A28 34	LOGIC CHASSIS		
0304910		IJ200 60	X	A28 38	LOGIC CHASSIS		
0305010		IJ200 64	X	A28 40	LOGIC CHASSIS		
0305110		IJ200 65	X	A29 36	LOGIC CHASSIS		
0305210		IJ200 70	X	A29 37	LOGIC CHASSIS		
0305310		IJ200 66	X	A26 13	LOGIC CHASSIS		
0305410		IJ200 71	X	A26 16	LOGIC CHASSIS		
0305510		IJ200 67	X	A29 41	LOGIC CHASSIS		
0305610		IJ200 72	X	A29 42	LOGIC CHASSIS		
0305710		IJ200 48	X	IJ201 48	LOGIC CHASSIS		
0305810		IJ200 51	X	IJ201 51	LOGIC CHASSIS		

ID NO	LENGTH	ORIGIN	S	DESTINATION	TITLE	SIZE/COLOR	ECO
0305910		IJ200 52	X	IJ201 52	LOGIC CHASSIS		
0306010		IJ200 55	X	IJ201 55	LOGIC CHASSIS		
0306110		IJ200 73	X	IJ201 73	LOGIC CHASSIS		
0306210		IJ200 76	X	IJ201 76	LOGIC CHASSIS		
0400110		IJ201 01	X	A24 08	LOGIC CHASSIS		
0400210		IJ201 04	X	A24 09	LOGIC CHASSIS		
0400310		IJ201 02	X	A24 13	LOGIC CHASSIS		
0400410		IJ201 05	X	A24 16	LOGIC CHASSIS		
0400510		IJ201 03	X	A24 21	LOGIC CHASSIS		
0400610		IJ201 07	X	A24 24	LOGIC CHASSIS		
0400710		IJ201 08	X	A24 28	LOGIC CHASSIS		
0400810		IJ201 12	X	A24 29	LOGIC CHASSIS		
0400910		IJ201 10	X	A24 33	LOGIC CHASSIS		
0401010		IJ201 13	X	A24 34	LOGIC CHASSIS		
0401110		IJ201 11	X	A24 38	LOGIC CHASSIS		
0401210		IJ201 14	X	A24 40	LOGIC CHASSIS		
0401310		IJ201 15	X	A24 44	LOGIC CHASSIS		
0401410		IJ201 18	X	A24 45	LOGIC CHASSIS		
0401510		IJ201 16	X	A26 08	LOGIC CHASSIS		
0401610		IJ201 20	X	A26 09	LOGIC CHASSIS		
0401710		IJ201 17	X	A25 36	LOGIC CHASSIS		
0401810		IJ201 21	X	A25 37	LOGIC CHASSIS		
0401910		IJ201 22	X	A27 28	LOGIC CHASSIS		
0402010		IJ201 25	X	A27 29	LOGIC CHASSIS		
0402110		IJ201 23	X	A25 28	LOGIC CHASSIS		
0402210		IJ201 26	X	A25 29	LOGIC CHASSIS		
0402310		IJ201 24	X	A27 36	LOGIC CHASSIS		
0402410		IJ201 27	X	A27 37	LOGIC CHASSIS		
0402510		IJ201 28	X	A25 41	LOGIC CHASSIS		
0402610		IJ201 31	X	A25 42	LOGIC CHASSIS		
0402710		IJ201 29	X	A27 41	LOGIC CHASSIS		
0402810		IJ201 32	X	A27 42	LOGIC CHASSIS		
0402910		IJ201 30	X	A28 21	LOGIC CHASSIS		
0403010		IJ201 33	X	A28 24	LOGIC CHASSIS		
0403110		IJ201 34	X	A28 08	LOGIC CHASSIS		
0403210		IJ201 37	X	A28 09	LOGIC CHASSIS		
0403310		IJ201 35	X	A28 13	LOGIC CHASSIS		
0403410		IJ201 38	X	A28 16	LOGIC CHASSIS		
0403510		IJ201 40	X	A25 21	LOGIC CHASSIS		
0403610		IJ201 43	X	A25 22	LOGIC CHASSIS		
0403710		IJ201 41	X	A27 21	LOGIC CHASSIS		

ID NO	LENGTH	ORIGIN	S	DESTINATION		TITLE	SIZE/COLOR	ECO
0403810		IJ201 44	X	A27	22	LOGIC CHASSIS		
0403910		IJ201 42	X	A29	21	LOGIC CHASSIS		
0404010		IJ201 45	X	A29	22	LOGIC CHASSIS		
0404110		IJ201 46	X	A29	16	LOGIC CHASSIS		
0404210		IJ201 49	X	A29	17	LOGIC CHASSIS		
0404310		IJ201 47	X	A29	28	LOGIC CHASSIS		
0404410		IJ201 50	X	A29	29	LOGIC CHASSIS		
0404510		IJ201 58	X	A28	28	LOGIC CHASSIS		
0404610		IJ201 62	X	A28	29	LOGIC CHASSIS		
0404710		IJ201 59	X	A28	33	LOGIC CHASSIS		
0404810		IJ201 63	X	A28	34	LOGIC CHASSIS		
0404910		IJ201 60	X	A28	38	LOGIC CHASSIS		
0405010		IJ201 64	X	A28	40	LOGIC CHASSIS		
0405110		IJ201 65	X	A29	36	LOGIC CHASSIS		
0405210		IJ201 70	X	A29	37	LOGIC CHASSIS		
0405310		IJ201 66	X	A26	13	LOGIC CHASSIS		
0405410		IJ201 71	X	A26	16	LOGIC CHASSIS		
0405510		IJ201 67	X	A29	41	LOGIC CHASSIS		
0405610		IJ201 72	X	A29	42	LOGIC CHASSIS		
0500110		IJ202 B	X	A26	21	LOGIC CHASSIS		
0500210		IJ202 D	X	A26	24	LOGIC CHASSIS		
0500310		IJ202 BB	X	A26	28	LOGIC CHASSIS		
0500410		IJ202 DD	X	A26	29	LOGIC CHASSIS		
0500510		IJ202 E	X	A26	33	LOGIC CHASSIS		
0500610		IJ202 H	X	A26	34	LOGIC CHASSIS		
0500710		IJ202 EE	X	A26	38	LOGIC CHASSIS		
0500810		IJ202 HH	X	A26	40	LOGIC CHASSIS		
0500910		IJ202 F	X	A28	44	LOGIC CHASSIS		
0501010		IJ202 J	X	A28	45	LOGIC CHASSIS		
0501110		IJ202 FF	X	A26	44	LOGIC CHASSIS		
0501210		IJ202 JJ	X	A26	45	LOGIC CHASSIS		
0600110		IIJ20001	X	B25	01	LOGIC CHASSIS		
0600210		IIJ20004	X	B25	05	LOGIC CHASSIS		
0600310		IIJ20002	X	B25	09	LOGIC CHASSIS		
0600410		IIJ20005	X	B25	12	LOGIC CHASSIS		
0600510		IIJ20003	X	B25	16	LOGIC CHASSIS		
0600610		IIJ20007	X	B25	17	LOGIC CHASSIS		
0600710		IIJ20008	X	B27	01	LOGIC CHASSIS		
0600810		IIJ20012	X	B27	05	LOGIC CHASSIS		
0600910		IIJ20010	X	B27	09	LOGIC CHASSIS		
0601010		IIJ20013	X	B27	12	LOGIC CHASSIS		

ID NO	LENGTH	ORIGIN	S	DESTINATION		TITLE	SIZE/COLOR	ECO
0601110		IIJ20011	X	B27	16	LOGIC CHASSIS		
0601210		IIJ20014	X	B27	17	LOGIC CHASSIS		
0601310		IIJ20015	X	B29	01	LOGIC CHASSIS		
0601410		IIJ20018	X	B29	05	LOGIC CHASSIS		
0601510		IIJ20016	X	B29	09	LOGIC CHASSIS		
0601610		IIJ20020	X	B29	12	LOGIC CHASSIS		
0601710		IIJ20017	X	B25	36	LOGIC CHASSIS		
0601810		IIJ20021	X	B25	37	LOGIC CHASSIS		
0601910		IIJ20022	X	B27	28	LOGIC CHASSIS		
0602010		IIJ20025	X	B27	29	LOGIC CHASSIS		
0602110		IIJ20023	X	B25	28	LOGIC CHASSIS		
0602210		IIJ20026	X	B25	29	LOGIC CHASSIS		
0602310		IIJ20024	X	B27	36	LOGIC CHASSIS		
0602410		IIJ20027	X	B27	37	LOGIC CHASSIS		
0602510		IIJ20028	X	B25	41	LOGIC CHASSIS		
0602610		IIJ20031	X	B25	42	LOGIC CHASSIS		
0602710		IIJ20029	X	B27	41	LOGIC CHASSIS		
0602810		IIJ20032	X	B27	42	LOGIC CHASSIS		
0602910		IIJ20030	X	B28	21	LOGIC CHASSIS		
0603010		IIJ20033	X	B28	24	LOGIC CHASSIS		
0603110		IIJ20034	X	B28	08	LOGIC CHASSIS		
0603210		IIJ20037	X	B28	09	LOGIC CHASSIS		
0603310		IIJ20035	X	B28	13	LOGIC CHASSIS		
0603410		IIJ20038	X	B28	16	LOGIC CHASSIS		
0603510		IIJ20040	X	B25	21	LOGIC CHASSIS		
0603610		IIJ20043	X	B25	22	LOGIC CHASSIS		
0603710		IIJ20041	X	B27	21	LOGIC CHASSIS		
0603810		IIJ20044	X	B27	22	LOGIC CHASSIS		
0603910		IIJ20042	X	B29	21	LOGIC CHASSIS		
0604010		IIJ20045	X	B29	22	LOGIC CHASSIS		
0604110		IIJ20046	X	B29	16	LOGIC CHASSIS		
0604210		IIJ20049	X	B29	17	LOGIC CHASSIS		
0604310		IIJ20047	X	B29	28	LOGIC CHASSIS		
0604410		IIJ20050	X	B29	29	LOGIC CHASSIS		
0604510		IIJ20058	X	B28	28	LOGIC CHASSIS		
0604610		IIJ20062	X	B28	29	LOGIC CHASSIS		
0604710		IIJ20059	X	B28	33	LOGIC CHASSIS		
0604810		IIJ20063	X	B28	34	LOGIC CHASSIS		
0604910		IIJ20060	X	B28	38	LOGIC CHASSIS		
0605010		IIJ20064	X	B28	40	LOGIC CHASSIS		
0605110		IIJ20065	X	B29	36	LOGIC CHASSIS		

ID NO	LENGTH	ORIGIN	S	DESTINATION	TITLE	SIZE/COLOR	ECO
0605210		IIJ20070	X	B29 37	LOGIC CHASSIS		
0605310		IIJ20066	X	B26 13	LOGIC CHASSIS		
0605410		IIJ20071	X	B26 16	LOGIC CHASSIS		
0605510		IIJ20067	X	B29 41	LOGIC CHASSIS		
0605610		IIJ20072	X	B29 42	LOGIC CHASSIS		
0605710		IIJ20048	X	IIJ20148	LOGIC CHASSIS		
0605810		IIJ20051	X	IIJ20151	LOGIC CHASSIS		
0605910		IIJ20052	X	IIJ20152	LOGIC CHASSIS		
0606010		IIJ20055	X	IIJ20155	LOGIC CHASSIS		
0606110		IIJ20073	X	IIJ20173	LOGIC CHASSIS		
0606210		IIJ20076	X	IIJ20176	LOGIC CHASSIS		
0700110		IIJ20101	X	B24 08	LOGIC CHASSIS		
0700210		IIJ20104	X	B24 09	LOGIC CHASSIS		
0700310		IIJ20102	X	B24 13	LOGIC CHASSIS		
0700410		IIJ20105	X	B24 16	LOGIC CHASSIS		
0700510		IIJ20103	X	B24 21	LOGIC CHASSIS		
0700610		IIJ20107	X	B24 24	LOGIC CHASSIS		
0700710		IIJ20108	X	B24 28	LOGIC CHASSIS		
0700810		IIJ20112	X	B24 29	LOGIC CHASSIS		
0700910		IIJ20110	X	B24 33	LOGIC CHASSIS		
0701010		IIJ20113	X	B24 34	LOGIC CHASSIS		
0701110		IIJ20111	X	B24 38	LOGIC CHASSIS		
0701210		IIJ20114	X	B24 40	LOGIC CHASSIS		
0701310		IIJ20115	X	B24 44	LOGIC CHASSIS		
0701410		IIJ20118	X	B24 45	LOGIC CHASSIS		
0701510		IIJ20116	X	B26 08	LOGIC CHASSIS		
0701610		IIJ20120	X	B26 09	LOGIC CHASSIS		
0701710		IIJ20117	X	B25 36	LOGIC CHASSIS		
0701810		IIJ20121	X	B25 37	LOGIC CHASSIS		
0701910		IIJ20122	X	B27 28	LOGIC CHASSIS		
0702010		IIJ20125	X	B27 29	LOGIC CHASSIS		
0702110		IIJ20123	X	B25 28	LOGIC CHASSIS		
0702210		IIJ20126	X	B25 29	LOGIC CHASSIS		
0702310		IIJ20124	X	B27 36	LOGIC CHASSIS		
0702410		IIJ20127	X	B27 37	LOGIC CHASSIS		
0702510		IIJ20128	X	B25 41	LOGIC CHASSIS		
0702610		IIJ20131	X	B25 42	LOGIC CHASSIS		
0702710		IIJ20129	X	B27 41	LOGIC CHASSIS		
0702810		IIJ20132	X	B27 42	LOGIC CHASSIS		
0702910		IIJ20130	X	B28 21	LOGIC CHASSIS		
0703010		IIJ20133	X	B28 24	LOGIC CHASSIS		

ID NO	LENGTH	ORIGIN	S	DESTINATION	TITLE	SIZE/COLOR	ECO
0703110		IIJ20134	X	B28 08	LOGIC CHASSIS		
0703210		IIJ20137	X	B28 09	LOGIC CHASSIS		
0703310		IIJ20135	X	B28 13	LOGIC CHASSIS		
0703410		IIJ20138	X	B28 16	LOGIC CHASSIS		
0703510		IIJ20140	X	B25 21	LOGIC CHASSIS		
0703610		IIJ20143	X	B25 22	LOGIC CHASSIS		
0703710		IIJ20141	X	B27 21	LOGIC CHASSIS		
0703810		IIJ20144	X	B27 22	LOGIC CHASSIS		
0703910		IIJ20142	X	B29 21	LOGIC CHASSIS		
0704010		IIJ20145	X	B29 22	LOGIC CHASSIS		
0704110		IIJ20146	X	B29 16	LOGIC CHASSIS		
0704210		IIJ20149	X	B29 17	LOGIC CHASSIS		
0704310		IIJ20147	X	B29 28	LOGIC CHASSIS		
0704410		IIJ20150	X	B29 29	LOGIC CHASSIS		
0704510		IIJ20158	X	B28 28	LOGIC CHASSIS		
0704610		IIJ20162	X	B28 29	LOGIC CHASSIS		
0704710		IIJ20159	X	B28 33	LOGIC CHASSIS		
0704810		IIJ20163	X	B28 34	LOGIC CHASSIS		
0704910		IIJ20160	X	B28 38	LOGIC CHASSIS		
0705010		IIJ20164	X	B28 40	LOGIC CHASSIS		
0705110		IIJ20165	X	B29 36	LOGIC CHASSIS		
0705210		IIJ20170	X	B29 37	LOGIC CHASSIS		
0705310		IIJ20166	X	B26 13	LOGIC CHASSIS		
0705410		IIJ20171	X	B26 16	LOGIC CHASSIS		
0705510		IIJ20167	X	B29 41	LOGIC CHASSIS		
0705610		IIJ20172	X	B29 42	LOGIC CHASSIS		
0800110		IIJ202 B	X	B26 21	LOGIC CHASSIS		
0800210		IIJ202 D	X	B26 24	LOGIC CHASSIS		
0800310		IIJ202BB	X	B26 28	LOGIC CHASSIS		
0800410		IIJ202DD	X	B26 29	LOGIC CHASSIS		
0800510		IIJ202 E	X	B26 33	LOGIC CHASSIS		
0800610		IIJ202 H	X	B26 34	LOGIC CHASSIS		
0800710		IIJ202EE	X	B26 38	LOGIC CHASSIS		
0800810		IIJ202HH	X	B26 40	LOGIC CHASSIS		
0800910		IIJ202 F	X	B28 44	LOGIC CHASSIS		
0801010		IIJ202 J	X	B28 45	LOGIC CHASSIS		
0801110		IIJ202FF	X	B26 44	LOGIC CHASSIS		
0801210		IIJ202JJ	X	B26 45	LOGIC CHASSIS		
0900110	05	A03 45	O	A09 18	LOGIC CHASSIS		
0900210	06	A03 20	O	A11 33	LOGIC CHASSIS		
0900310	06	A03 30	O	A12 45	LOGIC CHASSIS		

ID NO	LENGTH	ORIGIN		S	DESTINATION		TITLE	SIZE/COLOR	ECO
0900410	07	A03	32	0	A12	14	LOGIC CHASSIS		
0900510	06	A03	33	0	A12	44	LOGIC CHASSIS		
0900610	06	A03	36	0	A12	42	LOGIC CHASSIS		
0900710	07	A03	37	0	A13	38	LOGIC CHASSIS		
0900810	07	A03	38	0	A13	37	LOGIC CHASSIS		
0900910	07	A03	40	0	A13	36	LOGIC CHASSIS		
0901010	07	A03	41	0	A13	33	LOGIC CHASSIS		
0901110	07	A03	17	0	A12	33	LOGIC CHASSIS		
0901210	04	A03	29	0	A07	16	LOGIC CHASSIS		
0901310	04	A03	25	0	A08	10	LOGIC CHASSIS		
0901510	05	A03	28	0	A08	08	LOGIC CHASSIS		
0901610	07	A03	08	0	A13	10	LOGIC CHASSIS		
0901710	07	A03	05	0	A13	44	LOGIC CHASSIS		
0901810	08	A03	01	0	A13	45	LOGIC CHASSIS		
1000110	05	B03	45	0	B09	18	LOGIC CHASSIS		
1000210	06	B03	20	0	B11	33	LOGIC CHASSIS		
1000310	06	B03	30	0	B12	45	LOGIC CHASSIS		
1000410	07	B03	32	0	B12	14	LOGIC CHASSIS		
1000510	06	B03	33	0	B12	44	LOGIC CHASSIS		
1000610	06	B03	36	0	B12	42	LOGIC CHASSIS		
1000710	07	B03	37	0	B13	38	LOGIC CHASSIS		
1000810	07	B03	38	0	B13	37	LOGIC CHASSIS		
1000910	07	B03	40	0	B13	36	LOGIC CHASSIS		
1001010	07	B03	41	0	B13	33	LOGIC CHASSIS		
1001110	07	B03	17	0	B12	33	LOGIC CHASSIS		
1001210	04	B03	29	0	B07	16	LOGIC CHASSIS		
1001310	04	B03	25	0	B08	10	LOGIC CHASSIS		
1001510	05	B03	28	0	B08	08	LOGIC CHASSIS		
1001610	07	B03	08	0	B13	10	LOGIC CHASSIS		
1001710	07	B03	05	0	B13	44	LOGIC CHASSIS		
1001810	08	B03	01	0	B13	45	LOGIC CHASSIS		
1100010	07	B02	06	R	A01	06	LOGIC CHASSIS		
1100011	02	A02	06	R	A03	06	LOGIC CHASSIS		
1100012	02	A03	06	R	A04	06	LOGIC CHASSIS		
1100013	02	A04	06	R	A05	06	LOGIC CHASSIS		
1100020	02	A06	06	R	A07	06	LOGIC CHASSIS		
1100021	02	A07	06	R	A08	06	LOGIC CHASSIS		
1100022	02	A08	06	R	A09	06	LOGIC CHASSIS		
1100023	02	A09	06	R	A10	06	LOGIC CHASSIS		
1100030	02	A12	06	R	A13	06	LOGIC CHASSIS		
1100031	02	A13	06	R	A14	06	LOGIC CHASSIS		

ID NO	LENGTH	ORIGIN	S	DESTINATION	TITLE	SIZE/COLOR	ECO
1100032	02	A14 06	R	A15 06	LOGIC CHASSIS		
1100033	02	A15 06	R	A16 06	LOGIC CHASSIS		
1100034	02	A16 06	R	A17 06	LOGIC CHASSIS		
1100035	02	A11 06	R	A12 06	LOGIC CHASSIS		
1100040	02	A18 06	R	A19 06	LOGIC CHASSIS		
1100041	02	A19 06	R	A20 06	LOGIC CHASSIS		
1100042	02	A20 06	R	A21 06	LOGIC CHASSIS		
1100043	02	A21 06	R	A22 06	LOGIC CHASSIS		
1100044	02	A22 06	R	A23 06	LOGIC CHASSIS		
1100050	02	A24 06	R	A25 06	LOGIC CHASSIS		
1100051	02	A25 06	R	A26 06	LOGIC CHASSIS		
1100060	02	A27 06	R	A28 06	LOGIC CHASSIS		
1100061	02	A28 06	R	A29 06	LOGIC CHASSIS		
1100110	07	B02 46	R	A01 46	LOGIC CHASSIS		
1100111	02	A02 46	R	A03 46	LOGIC CHASSIS		
1100112	02	A03 46	R	A04 46	LOGIC CHASSIS		
1100113	02	A04 46	R	A05 46	LOGIC CHASSIS		
1100120	02	A06 46	R	A07 46	LOGIC CHASSIS		
1100121	02	A07 46	R	A08 46	LOGIC CHASSIS		
1100122	02	A08 46	R	A09 46	LOGIC CHASSIS		
1100123	02	A09 46	R	A10 46	LOGIC CHASSIS		
1100130	02	A12 46	R	A13 46	LOGIC CHASSIS		
1100131	02	A13 46	R	A14 46	LOGIC CHASSIS		
1100132	02	A14 46	R	A15 46	LOGIC CHASSIS		
1100133	02	A15 46	R	A16 46	LOGIC CHASSIS		
1100134	02	A16 46	R	A17 46	LOGIC CHASSIS		
1100135	02	A11 46	R	A12 46	LOGIC CHASSIS		
1100140	02	A18 46	R	A19 46	LOGIC CHASSIS		
1100141	02	A19 46	R	A20 46	LOGIC CHASSIS		
1100142	02	A20 46	R	A21 46	LOGIC CHASSIS		
1100143	02	A21 46	R	A22 46	LOGIC CHASSIS		
1100144	02	A22 46	R	A23 46	LOGIC CHASSIS		
1100150	02	A24 46	R	A25 46	LOGIC CHASSIS		
1100151	02	A25 46	R	A26 46	LOGIC CHASSIS		
1100160	02	A27 46	R	A28 46	LOGIC CHASSIS		
1100161	02	A28 46	R	A29 46	LOGIC CHASSIS		
1100210	07	B02 48	R	A01 48	LOGIC CHASSIS		
1100211	02	A02 48	R	A03 48	LOGIC CHASSIS		
1100212	02	A03 48	R	A04 48	LOGIC CHASSIS		
1100213	02	A04 48	R	A05 48	LOGIC CHASSIS		
1100220	02	A06 48	R	A07 48	LOGIC CHASSIS		

ID NO	LENGTH	ORIGIN	S	DESTINATION	TITLE	SIZE/COLOR	ECO
1100221	02	A07 48	R	A08 48	LOGIC CHASSIS		
1100222	02	A08 48	R	A09 48	LOGIC CHASSIS		
1100223	02	A09 48	R	A10 48	LOGIC CHASSIS		
1100230	02	A12 48	R	A13 48	LOGIC CHASSIS		
1100231	02	A13 48	R	A14 48	LOGIC CHASSIS		
1100232	02	A14 48	R	A15 48	LOGIC CHASSIS		
1100233	02	A15 48	R	A16 48	LOGIC CHASSIS		
1100234	02	A16 48	R	A17 48	LOGIC CHASSIS		
1100235	02	A11 48	R	A12 48	LOGIC CHASSIS		
1100243	02	A21 48	R	A22 48	LOGIC CHASSIS		
1100244	02	A22 48	R	A23 48	LOGIC CHASSIS		
1100240	02	A18 48	R	A19 48	LOGIC CHASSIS		
1100241	02	A19 48	R	A20 48	LOGIC CHASSIS		
1100242	02	A20 48	R	A21 48	LOGIC CHASSIS		
1100310	07	A02 06	R	B01 06	LOGIC CHASSIS		
1100311	02	B02 06	R	B03 06	LOGIC CHASSIS		
1100312	02	B03 06	R	B04 06	LOGIC CHASSIS		
1100313	02	B04 06	R	B05 06	LOGIC CHASSIS		
1100320	02	B06 06	R	B07 06	LOGIC CHASSIS		
1100321	02	B07 06	R	B08 06	LOGIC CHASSIS		
1100322	02	B08 06	R	B09 06	LOGIC CHASSIS		
1100323	02	B09 06	R	B10 06	LOGIC CHASSIS		
1100330	02	B12 06	R	B13 06	LOGIC CHASSIS		
1100331	02	B13 06	R	B14 06	LOGIC CHASSIS		
1100332	02	B14 06	R	B15 06	LOGIC CHASSIS		
1100333	02	B15 06	R	B16 06	LOGIC CHASSIS		
1100334	02	B16 06	R	B17 06	LOGIC CHASSIS		
1100335	02	B11 06	R	B12 06	LOGIC CHASSIS		
1100340	02	B18 06	R	B19 06	LOGIC CHASSIS		
1100341	02	B19 06	R	B20 06	LOGIC CHASSIS		
1100342	02	B20 06	R	B21 06	LOGIC CHASSIS		
1100343	02	B21 06	R	B22 06	LOGIC CHASSIS		
1100344	02	B22 06	R	B23 06	LOGIC CHASSIS		
1100350	02	B24 06	R	B25 06	LOGIC CHASSIS		
1100351	02	B25 06	R	B26 06	LOGIC CHASSIS		
1100360	02	B27 06	R	B28 06	LOGIC CHASSIS		
1100361	02	B28 06	R	B29 06	LOGIC CHASSIS		
1100410	07	A02 46	R	B01 46	LOGIC CHASSIS		
1100411	02	B02 46	R	B03 46	LOGIC CHASSIS		
1100412	02	B03 46	R	B04 46	LOGIC CHASSIS		
1100413	02	B04 46	R	B05 46	LOGIC CHASSIS		

ID NO	LENGTH	ORIGIN	S	DESTINATION	TITLE	SIZE/COLOR	ECO
1100420	02	B06 46	R	B07 46	LOGIC CHASSIS		
1100421	02	B07 46	R	B08 46	LOGIC CHASSIS		
1100422	02	B08 46	R	B09 46	LOGIC CHASSIS		
1100423	02	B09 46	R	B10 46	LOGIC CHASSIS		
1100430	02	B12 46	R	B13 46	LOGIC CHASSIS		
1100431	02	B13 46	R	B14 46	LOGIC CHASSIS		
1100432	02	B14 46	R	B15 46	LOGIC CHASSIS		
1100433	02	B15 46	R	B16 46	LOGIC CHASSIS		
1100434	02	B16 46	R	B17 46	LOGIC CHASSIS		
1100435	02	B11 46	R	B12 46	LOGIC CHASSIS		
1100440	02	B18 46	R	B19 46	LOGIC CHASSIS		
1100441	02	B19 46	R	B20 46	LOGIC CHASSIS		
1100442	02	B20 46	R	B21 46	LOGIC CHASSIS		
1100443	02	B21 46	R	B22 46	LOGIC CHASSIS		
1100444	02	B22 46	R	B23 46	LOGIC CHASSIS		
1100450	02	B24 46	R	B25 46	LOGIC CHASSIS		
1100451	02	B25 46	R	B26 46	LOGIC CHASSIS		
1100460	02	B27 46	R	B28 46	LOGIC CHASSIS		
1100461	02	B28 46	R	B29 46	LOGIC CHASSIS		
1100510	07	A02 48	R	B01 48	LOGIC CHASSIS		
1100511	02	B02 48	R	B03 48	LOGIC CHASSIS		
1100512	02	B03 48	R	B04 48	LOGIC CHASSIS		
1100513	02	B04 48	R	B05 48	LOGIC CHASSIS		
1100520	02	B06 48	R	B07 48	LOGIC CHASSIS		
1100521	02	B07 48	R	B08 48	LOGIC CHASSIS		
1100522	02	B08 48	R	B09 48	LOGIC CHASSIS		
1100523	02	B09 48	R	B10 48	LOGIC CHASSIS		
1100530	02	B12 48	R	B13 48	LOGIC CHASSIS		
1100531	02	B13 48	R	B14 48	LOGIC CHASSIS		
1100532	02	B14 48	R	B15 48	LOGIC CHASSIS		
1100533	02	B15 48	R	B16 48	LOGIC CHASSIS		
1100534	02	B16 48	R	B17 48	LOGIC CHASSIS		
1100535	02	B11 48	R	B12 48	LOGIC CHASSIS		
1100540	02	B18 48	R	B19 48	LOGIC CHASSIS		
1100541	02	B19 48	R	B20 48	LOGIC CHASSIS		
1100542	02	B20 48	R	B21 48	LOGIC CHASSIS		
1100543	02	B21 48	R	B22 48	LOGIC CHASSIS		
1100544	02	B22 48	R	B23 48	LOGIC CHASSIS		

ID NO	LENGTH	ORIGIN	S	DESTINATION	TITLE
0207310	11	B01 28	0	A09 08	LOGIC CHASSIS
0207410	10	B01 26	0	A09 10	LOGIC CHASSIS
0207510	10	B01 25	0	A09 22	LOGIC CHASSIS
0207610	10	B01 29	0	A08 12	LOGIC CHASSIS
0207710	10	A01 28	0	B09 08	LOGIC CHASSIS
0207810	08	A01 26	0	B09 10	LOGIC CHASSIS
0207910	10	A01 25	0	B09 22	LOGIC CHASSIS
0208010	07	A01 29	0	B08 12	LOGIC CHASSIS
0208110	08	B01 01	0	A08 24	LOGIC CHASSIS
0208210	10	A01 01	0	B08 24	LOGIC CHASSIS
0208310		B01 37	X	A3J205 45	LOGIC CHASSIS
0208410		B01 38	X	A3J205 46	LOGIC CHASSIS
0208510		B01 33	X	1J202 K	LOGIC CHASSIS
0208610		B01 36	X	1J202 M	LOGIC CHASSIS
0208710		A01 37	X	A4J205 45	LOGIC CHASSIS
0208810		A01 38	X	A4J205 46	LOGIC CHASSIS
0208910		A01 33	X	1J202 KK	LOGIC CHASSIS
0209010		A01 36	X	1J202 MM	LOGIC CHASSIS
0209020	16	A01 14	0	B21 34	LOGIC CHASSIS
0209030	13	B01 14	0	A21 34	LOGIC CHASSIS
0209040	13	A22 25	0	B01 13	LOGIC CHASSIS
0209050	16	B22 25	0	A01 13	LOGIC CHASSIS
0209060	10	A08 18	0	B01 12	LOGIC CHASSIS
0209070	10	B08 18	0	A01 12	LOGIC CHASSIS

CONTROL DATA
MINNEAPOLIS, MINNESOTA

TITLE: WIRE LIST - LOGIC CHASSIS HARNESS ASSY
PRODUCT: MULTIPLE DISK DRIVE

WL | DOCUMENT NO. 40017600 | REV. F
SHEET 1 OF 22

REVISION STATUS OF SHEETS

REVISIONS

REV.	ECO	DESCRIPTION	DRFT.	DATE	CHKD.	APPD.
A		RELEASED		11-20-68		PML
B	PM4660	SEE CO	DB	2-18-69	JT	2-26-69
C	PM5578	SEE CO	GV	7-10-69	BCH	7-18
D	PM5578A	SEE CO	GV	7-10-69	BCH	7-18
E	PE11118	SEE CO	DS	9-17-69	JT	9-18-69
F	PE11118A	SEE CO				

NOTES:

1. A HEXAGON IN THE ACCESS FIND NO. COLUMN INDICATES THAT THE CONDUCTOR IS ONE OF SEVERAL (ALL WITH THE SAME NUMBER IN THE HEXAGON) GOING INTO THE SAME TERMINAL. THE NUMBER IN FRONT OF A HEXAGON IS THE TERMINAL FIND NO.
2. FOR MECH ASSY AND PL SEE 70821200.

COPIES TO | BY SD | DATE 10-10 | CHKD. C.M. | DATE 11/11/68 | ENGR [illegible] | DATE 11/13/68

FORM AA 1672

CONTROL DATA
MINNEAPOLIS, MINNESOTA

TITLE: WIRE LISTING

WL | DOCUMENT NO. 40017600 | REV. F
SHEET 2 OF

CONDUCTOR IDENT.	FIND NO.	GAUGE (REF.)	COLOR (REF.)	LENGTH (APPROX.)	ORIGIN		ACCESS FIND NO.	DESTINATION		ACCESS. FIND NO.	REMARKS
1	11	20	4		J204	42	13	J206	M	19	
2					J206	N	19	J204	43	13	
3					J204	45	13	J206	R	19	
4					J206	S	19	J204	46	13	
5					J204	48	9 ⬡1	IJ202	U	13	
6					⊡J202	U	13	J204	48	⬡1	
7					J204	51	13	J206	$\overline{J}$	19	
8					J206	$\overline{k}$	19	J204	52	13	
9					J204	53	13	J206	HH	19	
10					J206	$\overline{m}$	19	J204	54	13	
11					J204	55	13	J206	$\overline{n}$	19	
12					J206	$\overline{p}$	19	J204	56	13	
13					J204	57	13	J206	$\overline{r}$	19	
14					J206	$\overline{s}$	19	J204	58	13	
15					J204	60	13	J206	$\overline{u}$	19	
16					J206	$\overline{v}$	19	J204	62	13	
17					J204	64	9 ⬡2	IJ202	X	13	
18					⊡J202	X	13	J204	64	⬡2	
19	11	20	4		J204	65	9 ⬡3	IJ202	Y	13	

FORM AA 1659

CONTROL DATA
MINNEAPOLIS, MINNESOTA

TITLE: WIRE LISTING

WL | DOCUMENT NO. 40017600 | REV. F

SHEET 3 OF

CONDUCTOR IDENT.	FIND NO.	GAUGE (REF.)	COLOR (REF.)	LENGTH (APPROX.)	ORIGIN		ACCESS. FIND NO.	DESTINATION		ACCESS. FIND NO.	REMARKS
20	11	20	4		IIJ202	Y	13	J204	65	(3)	
21					J204	66	9 (4)	IJ202	Z	13	
22					IIJ202	Z	13	J204	66	(4)	
23					J204	16	13	A4J205	21	19	
24					A3J205	18	19	J204	24	13	
25					J204	26	13	A3J205	21	19	
26					A4J205	18	19	J204	33	13	
27					J204	36	13	J206	E	19	
28					J206	F	19	J204	37	13	
29					J204	39	13	J206	J	19	
30					J206	K	19	J204	40	13	
31					J204	41	13	J206	L	19	
32					J206	T	19	A3J205	25	19	
33					A3J205	32	19	TB203	1	32 (5)	
34					TB203	3	32	A3J205	35	19	
35					A3J205	36	19	TB203	7	15 (6)	
36					TB203	8	32	A4J205	36	19	
37					A4J205	35	19	TB203	4	32	
38	11	20	4		TB203	2	32 (6)	A4J205	32	19	

FORM AA 1669

CONTROL DATA
MINNEAPOLIS, MINNESOTA

TITLE: WIRE LISTING

WL | DOCUMENT NO. 40017600 | REV. F

SHEET 4 OF

CONDUCTOR IDENT.	FIND NO.	GAUGE (REF.)	COLOR (REF.)	LENGTH (APPROX.)	ORIGIN		ACCESS FIND NO.	DESTINATION		ACCESS. FIND NO.	REMARKS
39	11	20	4		A4J205	25	19	J206	W	19	
40					A3TB202	35	21 (7)	A3TB202	33	21 (8)	
41					A3TB202	33	(8)	A3TB202	27	21 (9)	
42					A3TB202	27	(9)	A3TB202	21	21 (10)	
43					A3TB202	21	(10)	A3TB202	15	21 (11)	
44					A3TB202	15	(11)	A3TB202	9	27	
45					A4TB202	35	21 (12)	A4TB202	33	21 (13)	
46					A4TB202	33	(13)	A4TB202	27	21 (14)	
47					A4TB202	27	(14)	A4TB202	21	21 (15)	
48					A4TB202	21	(15)	A4TB202	15	21 (16)	
49					A4TB202	15	(16)	A4TB202	9	27	
50					TB203	3	15 (17)	A23	46	29,30	
51					A17	46	29,30	TB203	3	(17)	
52					TB203	3	15 (18)	A11	46	29,30	
53					B23	46	29,30	TB203	4	15 (19)	
54					TB203	4	(19)	B17	46	29,30	
55					B11	46	29,30	TB203	4	15 (1)	
56					TB203	5	32	A29	46	29,30	
57	11	20	4		B29	46	29,30	TB203	5	32	

FORM AA 1669

CONTROL DATA
MINNEAPOLIS, MINNESOTA

TITLE: WIRE LISTING

WL | DOCUMENT NO. 40017600 | REV. F

SHEET 5 OF

CONDUCTOR IDENT.	FIND NO.	GAUGE (REF.)	COLOR (REF.)	LENGTH (APPROX.)	ORIGIN		ACCESS. FIND NO.	DESTINATION		ACCESS. FIND NO.	REMARKS
58	11	20	4		TB203	5	32	A26	46	29,30	
59					B26	46	29,30	TB203	5	32	
60					TB203	6	32	A29	6	29,30	
61					B29	6	29,30	TB203	6	32	
62					TB203	6	32	A26	6	29,30	
63					B26	6	29,30	TB203	6	32	
64					TB203	7	15 (20)	A23	6	29,30	
65					A17	6	29,30	TB203	7	15 (21)	
66					TB203	7	(21)	A11	6	29,30	
67					B23	6	29,30	TB203	8	15 (22)	
68					TB203	8	15,(49)	B17	6	29,30	
69					B11	6	29,30	TB203	8	(49)	
70					TB203	9	15 (23)	A23	48	29,30	
71					A17	48	29,30	TB203	9	32	
72					TB203	9	15 (24)	A10	48	29,30	
73					B23	48	29,30	TB203	10	15 (25)	
74					TB203	10	15 (26)	B17	48	29,30	
75					B10	48	29,30	TB203	10	32	
76	11	20	4		TB203	13	15 (27)	IJ202	R	13	

FORM AA1669

CONTROL DATA
MINNEAPOLIS, MINNESOTA

TITLE: WIRE LISTING

WL | DOCUMENT NO. 40017600 | REV. F

SHEET 6 OF

CONDUCTOR IDENT.	FIND NO.	GAUGE (REF.)	COLOR (REF.)	LENGTH (APPROX.)	ORIGIN		ACCESS. FIND NO.	DESTINATION		ACCESS. FIND NO.	REMARKS
77	11	20	4		IJ202	R	13	TB203	16	15 (28)	
78					A3TB202	36	27	A3TB202	6	21 (29)	
79					A3TB202	6	(29)	TB203	1	15 (30)	
80					TB203	1	(30)	A4TB202	6	21 (31)	
81					A4TB202	6	(31)	A4TB202	36	27	
82					TB203	4	(51)	B05	46	29,30	
83					B05	48	29,30	TB203	10	(26)	
84					TB203	3	(18)	A05	46	29,30	
85					A05	48	29,30	TB203	9	(24)	
86					A05	6	29,30	TB203	7	(46)	
87					TB203	8	32	B05	6	29,30	
88					A26	48	29,30	TB203	9	32	
89	11	20	4		TB203	10	32	B26	48	29,30	
90	12	24	4		A3TB204	1	22	J204	44	14	
91					J204	49	13 (52)	IJ202	V	14	
92					IJ202	V	14	J204	49	(52)	
93					J204	50	13 (53)	IJ202	W	14	
94					IJ202	W	14	J204	50	(53)	
95	12	24	4		J204	59	14	A4TB204	1	22	

FORM AA1669

CONTROL DATA
MINNEAPOLIS, MINNESOTA

TITLE: WIRE LISTING

WL | DOCUMENT NO. 40017600 | REV. F

SHEET 7 OF

CONDUCTOR IDENT.	FIND NO.	GAUGE (REF.)	COLOR (REF.)	LENGTH (APPROX.)	ORIGIN		ACCESS FIND NO.	DESTINATION		ACCESS. FIND NO.	REMARKS
96	12	24	4		A3TP201	–	22	J204	67	14	
97					J204	70	14	A4TP201	–	22	
98					A3J205	39	20	A8	1	23,24	
99					A7	13	23,24	A3J205	23	20	
100					J204	4	14	B7	37	16,17	
101					B8	45	16,17	J204	5	14	
102					J204	7	14	A8	45	16,17	
103					A7	37	16,17	J204	8	14	
104					J204	10	14	J206	Z	20	
105					J206	CC	20	J204	22	14	
106					J204	15	14	A4J205	22	20	
107					J206	H	20	J204	25	14	
108					J204	27	14	A3J205	22	20	
109					A3J205	26	20	A8	2	16,17	
110					A8	1	16,17	A3J205	27	20	
111					A3J205	28	20	A3TB204	2	22	
112					A11	30	16,17	A3J205	37	20	
113					A3J205	38	20	A11	45	16,17	
114	12	24	4		A14	1	16,17	A3J205	47	20	

FORM AA1669

CONTROL DATA
MINNEAPOLIS, MINNESOTA

TITLE: WIRE LISTING

WL | DOCUMENT NO. 40017600 | REV. F

SHEET 8 OF

CONDUCTOR IDENT.	FIND NO.	GAUGE (REF.)	COLOR (REF.)	LENGTH (APPROX.)	ORIGIN		ACCESS FIND NO.	DESTINATION		ACCESS. FIND NO.	REMARKS
115	12	24	4		A3J205	50	20	A14	8	16,17	
116					A17	16	16,17	A3J205	51	20	
117					A3J205	52	20	A14	20	16,17	
118					A14	42	16,17	A3J205	53	20	
119					A3J205	54	20	A14	37	16,17	
120					A14	36	16,17	A3J205	55	20	
121					A3J205	56	20	A15	42	16,17	
122					A15	45	16,17	A3J205	57	20	
123					A3J205	58	20	A15	9	16,17	
124					A15	29	16,17	A3J205	59	20	
125					A3J205	60	20	A15	24	16,17	
126					A15	13	16,17	A3J205	62	20	
127					A3J205	63	20	A15	22	16,17	
128					A15	40	16,17	A3J205	64	20	
129					A3J205	65	20	A15	33	16,17	
130					A15	14	16,17	A3J205	66	20	
131					A3J205	67	20	A15	28	16,17	
132					A15	34	16,17	A3J205	70	20	
133	12	24	4		A3J205	71	20	A15	12	16,17	

FORM AA1669

CONTROL DATA
MINNEAPOLIS, MINNESOTA

TITLE: WIRE LISTING

WL | DOCUMENT NO. 40017600 | REV. F

SHEET 9 OF

CONDUCTOR IDENT.	FIND NO.	GAUGE (REF.)	COLOR (REF.)	LENGTH (APPROX.)	ORIGIN		ACCESS FIND NO.	DESTINATION		ACCESS. FIND NO.	REMARKS
134	12	24	4		A15	21	16,17	A3J205	72	20	
135					A3J205	73	20	A15	20	16,17	
136					A15	38	16,17	A3J205	74	20	
137					A3J205	75	20	A15	36	16,17	
138					A15	16	16,17	A3J205	76	20	
139					A3J205	77	20	A15	17	16,17	
140					A15	25	16,17	A3J205	78	20	
141					A4J205	39	20	B8	1	16,17	
142					B7	13	16,17	A4J205	23	20	
143					A4J205	24	20	J206	$\overline{d}$	20	
144					A4J205	26	20	B8	2	16,17	
145					B8	1	16,17	A4J205	27	20	
146					A4J205	28	20	A4IB204	2	22	
147					B11	30	16,17	A4J205	37	20	
148					A4J205	38	20	B11	45	16,17	
149					B14	1	16,17	A4J205	47	20	
150					A4J205	50	20	B14	8	16,17	
151					B17	16	16,17	A4J205	51	20	
152	12	24	4		A4J205	52	20	B14	20	16,17	

FORM AA1659

CONTROL DATA
MINNEAPOLIS, MINNESOTA

TITLE: WIRE LISTING

WL | DOCUMENT NO. 40017600 | REV. F

SHEET 10 OF

CONDUCTOR IDENT.	FIND NO.	GAUGE (REF.)	COLOR (REF.)	LENGTH (APPROX.)	ORIGIN		ACCESS. FIND NO.	DESTINATION		ACCESS. FIND NO.	REMARKS
153	12	24	4		B14	42	16,17	A4J205	53	20	
154					A4J205	54	20	B14	37	16,17	
155					B14	36	16,17	A4J205	55	20	
156					A4J205	56	20	B15	42	16,17	
157					B15	45	16,17	A4J205	57	20	
158					A4J205	58	20	B15	9	16,17	
159					B15	29	16,17	A4J205	59	20	
160					A4J205	60	20	B15	24	16,17	
161					B15	13	16,17	A4J205	62	20	
162					A4J205	63	20	B15	22	16,17	
163					B15	40	16,17	A4J205	64	20	
164					A4J205	65	20	B15	33	16,17	
165					B15	14	16,17	A4J205	66	20	
166					A4J205	67	20	B15	28	16,17	
167					B15	34	16,17	A4J205	70	20	
168					A4J205	71	20	B15	12	16,17	
169					B15	21	16,17	A4J205	72	20	
170					A4J205	73	20	B15	20	16,17	
171	12	24	4		B15	38	16,17	A4J205	74	20	

FORM AA1659

CONTROL DATA
MINNEAPOLIS, MINNESOTA

TITLE
WIRE LISTING

WL | DOCUMENT NO. 40017600 | REV. F

SHEET 11 OF

CONDUCTOR IDENT.	FIND NO.	GAUGE (REF.)	COLOR (REF.)	LENGTH (APPROX.)	ORIGIN		ACCESS. FIND NO.	DESTINATION		ACCESS. FIND NO.	REMARKS
172	12	24	4		A4J205	75	20	B15	36	16,17	
173					B15	16	16,17	A4J205	76	20	
174					A4J205	77	20	B15	17	16,17	
175					B15	25	16,17	A4J205	78	20	
176					J206	B	20	A17	34	16,17	
177					A17	08	16,17	J206	D	20	
178					J206	C	20	TB203	3	32 (34)	
179					TB203	1	32 (35)	J206	U	20	
180					J206	V	20	A19	1	16,17	
181					A19	20	16,17	J206	W	20	
182					J206	X	20	A19	33	16,17	
183					A19	45	16,17	J206	Y	20	
184					J206	P	20	A3TB204	3	22	
185					A4TB204	3	22	J206	$\bar{t}$	20	
186					J206	$\bar{h}$	20	B17	08	16,17	
187					B17	34	16,17	J206	$\bar{e}$	20	
188					J206	$\bar{f}$	20	TB203	4	32 (36)	
189					TB203	2	32 (37)	J206	$\bar{x}$	20	
190	12	24	4		J206	$\bar{y}$	20	B19	1	16,17	

FORM AA1669

CONTROL DATA
MINNEAPOLIS, MINNESOTA

TITLE
WIRE LISTING

WL | DOCUMENT NO. 40017600 | REV. F

SHEET 12 OF

CONDUCTOR IDENT.	FIND NO.	GAUGE (REF.)	COLOR (REF.)	LENGTH (APPROX.)	ORIGIN		ACCESS. FIND NO.	DESTINATION		ACCESS. FIND NO.	REMARKS
191	12	24	4		B19	20	16,17	J206	$\bar{z}$	20	
192					J206	AA	20	B19	33	16,17	
193					B19	45	16,17	J206	BB	20	
194					A3TB202	7	21,(40)	A3TB202	2	27	
195					A3TB202	5	21 (38)	A3TB202	1	27	
196					A3TB202	30	27	A3TB202	31	27	
197					A3TB202	24	27	A3TB202	25	27	
198					A3TB202	18	27	A3TB202	19	27	
199					A3TB202	12	27	A3TB202	13	27	
200					A3TB202	34	27	A3TB202	31	27	
201					A3TB202	28	27	A3TB202	25	27	
202					A3TB202	22	27	A3TB202	19	27	
203					A3TB202	16	27	A3TB202	14	27	
204					A3TB202	5	(38)	A3TB202	8	27	
205					A3TB202	7	(40)	A3TB202	10	27	
206					A4TB202	7	21,(40)	A4TB202	2	27	
207					A4TB202	5	21 (39)	A4TB202	1	27	
208					A4TB202	30	27	A4TB202	31	27	
209	12	24	4		A4TB202	24	27	A4TB202	25	27	

FORM AA1669

HONEYWELL	TITLE	WL	DOCUMENT NO.	REV.
MINNEAPOLIS, MINNESOTA	WIRE LISTING		40017600	F
		SHEET 13 OF		

CONDUCTOR IDENT.	FIND NO.	GAUGE (REF.)	COLOR (REF.)	LENGTH (APPROX.)	ORIGIN		ACCESS. FIND NO.	DESTINATION		ACCESS. FIND NO.	REMARKS
210	12	24	4		A4TB202	18	27	A4TB202	19	27	
211					A4TB202	12	27	A4TB202	13	27	
212					A4TB202	34	27	A4TB202	31	27	
213					A4TB202	28	27	A4TB202	25	27	
214					A4TB202	22	27	A4TB202	19	27	
215					A4TB202	16	27	A4TB202	14	27	
216					A4TB202	5	(39)	A4TB202	8	27	
217					A4TB202	7	(49)	A4TB202	10	27	
218					TB203	1	(5)	A3TP200	—	22	
219					A3TP203	—	22	TB203	3	(34)	
220					TB203	2	(6)	A4TP200	—	22	
221					A4TP203	—	22	TB203	4	(36)	
222					TB203	7	(20)	A3TP204	—	22	
223					A3TP202	—	22	TB203	9	(23)	
224					TB203	8	(22)	A4TP204	—	22	
225					A4TP202	—	22	TB203	10	(25)	
226					TB203	13	15 (27)	IJ202	N	14	
227					IJ200	80	20	TB203	13	32 (40)	
228	12	24	4		TB203	13	(40)	IJ201	80	20	

FORM AA1669

HONEYWELL	TITLE	WL	DOCUMENT NO.	REV.
MINNEAPOLIS, MINNESOTA	WIRE LISTING		40017600	F
		SHEET 14 OF		

CONDUCTOR IDENT.	FIND NO.	GAUGE (REF.)	COLOR (REF.)	LENGTH (APPROX.)	ORIGIN		ACCESS FIND NO.	DESTINATION		ACCESS. FIND NO.	REMARKS
229	12	24	4		A30	2	16,17	TB203	13	32 (41)	
230					TB203	13	(41)	A30	50	16,17	
231					IIJ202	N	14	TB203	16	(28)	
232					TB203	16	32 (42)	IIJ200	80	20	
233					IIJ201	80	20	TB203	16	(42)	
234					TB203	16	32 (43)	B30	2	16,17	
235					B30	50	16,17	TB203	16	(43)	
236					TB203	1	(33)	A3TB204	7	22	
237					A3TB204	4	22	A14	45	16,17	
238					B14	45	16,17	A4TB204	4	22	
239					A4TB204	7	22	TB203	2	(37)	
240					A3TB202	36	27	A3TB202	37	27	
241					A4TB202	36	27	A4TB202	37	27	
242					A22	25	16,17	A3J205	40	20	
243					A3J205	41	20	A22	18	16,17	
244					B22	25	16,17	A4J205	40	20	
245					A4J205	41	20	B22	18	16,17	
246					A3J205	24	20	J206	A	20	
247	12	24	4		A4S202	3	22	B17	9	16,17	

FORM AA1669

CONTROL DATA
MINNEAPOLIS, MINNESOTA

TITLE: WIRE LISTING

WL | DOCUMENT NO. 40017600 | REV. F

SHEET 15 OF

CONDUCTOR IDENT.	FIND NO.	GAUGE (REF.)	COLOR (REF.)	LENGTH (APPROX)	ORIGIN		ACCESS FIND NO.	DESTINATION		ACCESS. FIND NO.	REMARKS
248	12	24	4		A3S202	2	22	A17	33	16,17	
249					A3S202	3		A17	9		
250					A3S202	4		A17	26		
251					A3S202	5		A17	5		
252					A4S202	C		B17	32		
253					A4S202	1		B17	44		
254	12	24	4		A4S202	2	22	B17	33	16,17	
255	10	16	4		A3J205	1	18	TB203	3	15	
256					TB203	7	15	A3J205	2	18	
257					A3J205	3	18	J204	21	9	
258					A3J205	20	18	TB203	1	34,50	
259					TB203	1	51	J204	1	9	
260					J204	2	9	TB203	1	15	
261					TB203	2	15	J204	3	9	
262					J204	11	9	TB203	6	15	
263					TB203	5	15	J204	12	9	
264					J204	13	9	TB203	9	15	
265					TB203	10	15	J204	14	9	
266	10	16	4		J204	17	9	A3TB202	35	21	

FORM AA1669

CONTROL DATA
MINNEAPOLIS, MINNESOTA

TITLE: WIRE LISTING

WL | DOCUMENT NO. 40017600 | REV. F

SHEET 16 OF

CONDUCTOR IDENT.	FIND NO.	GAUGE (REF.)	COLOR (REF.)	LENGTH (APPROX)	ORIGIN		ACCESS FIND NO.	DESTINATION		ACCESS. FIND NO.	REMARKS
267	10	16	4		TB203	3	15	J204	18	9	
268					J204	20	9	TB203	4	15	
269					TB203	7	15	J204	28	9	
270					J204	29	9	TB203	8	15	
271					A4J205	3	18	J204	30	9	
272					J204	35	9	A4TB202	35	21	
273					TB203	4	15	A4J205	1	18	
274					A4J205	20	18	TB203	2	15	
275					TB203	1	15	TOP BUSS BAR	—	23,24	
276					MIDDLE BUSS BAR	—	23,24	TB203	2	34	
277					TB203	2		BOTTOM BUSS BAR	—	23,24	
278	10	16	4		TB203	8	15	A4J205	2	18	
279	12	24	4		A3S201	1	16	A17	41	16,17	
280					A4S201	1	16	B17	41		
281					A3DS200	B	27	A17	42		
282					A4DS200	B	27	B17	42		
283					A3S202	C	22	A17	32		
284	12	24	4		A3S202	1	22	A17	44	16,17	

FORM AA1669

CONTROL DATA
MINNEAPOLIS, MINNESOTA

TITLE: WIRE LISTING

WL | DOCUMENT NO. 40017600 | REV. F

SHEET 17 OF

CONDUCTOR IDENT.	FIND NO.	GAUGE (REF.)	COLOR (REF.)	LENGTH (APPROX.)	ORIGIN		ACCESS. FIND NO.	DESTINATION		ACCESS. FIND NO.	REMARKS
285	25	24									
285A			0		A3J205	4	20	A3TB202	35	⑦	
285B			4		A3J205	8	20	A3TB202	37	27	
286	25	24									
286A			0		A3TB202	9	27	A3J205	5	20	
286B			4		A3TB202	7	27	A3J205	10	20	
287	25	24									
287A			0		A3J205	7	20	A3TB202	15	27	
287B			4		A3J205	11	20	A3TB202	11	27	
288	25	24									
288A			0		A3TB202	21	27	A3J205	12	20	
288B			4		A3TB202	17	27	A3J205	15	20	
289	25	24									
289A			0		A3J205	13	20	A3TB202	27	27	
289B			4		A3J205	16	20	A3TB202	23	27	
290	25	24									
290A			0		A3TB202	33	27	A3J205	14	20	
290B			4		A3TB202	29	27	A3J205	17	20	

FORM AA1669

CONTROL DATA
MINNEAPOLIS, MINNESOTA

TITLE: WIRE LISTING

WL | DOCUMENT NO. 40017600 | REV. F

SHEET 18 OF

CONDUCTOR IDENT.	FIND NO.	GAUGE (REF.)	COLOR (REF.)	LENGTH (APPROX.)	ORIGIN		ACCESS. FIND NO.	DESTINATION		ACCESS. FIND NO.	REMARKS
291	25	24									
291A			0		A3J205	31	20	A11	25	16,17	
291B			4		A3J205	34	20	A11	24	16,17	
292	25	24									
292A			0		IJ202	K	14	A3J205	45	20	
292B			4		IJ202	M	14	A3J205	46	20	
293	25	24									
293A			0		A3J205	48	20	IIJ202	K	14	
293B			4		A3J205	49	20	IIJ202	M	14	
294	25	24									
294A			0		A4J205	4	20	A4TB202	35	⑫	
294B			4		A4J205	8	20	A4TB202	37	27	
295	25	24									
295A			0		A4TB202	9	27	A4J205	5	20	
295B			4		A4TB202	7	27	A4J205	10	20	
296	25	24									
296A			0		A4J205	7	20	A4TB202	15	27	
296B			4		A4J205	11	20	A4TB202	11	27	

FORM AA1669

CONTROL DATA
MINNEAPOLIS, MINNESOTA

TITLE: WIRE LISTING

WL | DOCUMENT NO. 40017600 | REV. F

SHEET 19 OF

CONDUCTOR IDENT.	FIND NO.	GAUGE (REF.)	COLOR (REF.)	LENGTH (APPROX.)	ORIGIN		ACCESS. FIND NO.	DESTINATION		ACCESS. FIND NO.	REMARKS
297	25	24									
297A			0		A4TB202	21	27	A4J205	12	20	
297B			4		A4TB202	17	27	A4J205	15	20	
298	25	24									
298A			0		A4J205	13	20	A4TB202	27	27	
298B			4		A4J205	16	20	A4TB202	23	27	
299	25	24									
299A			0		A4TB202	33	27	A4J205	14	20	
299B			4		A4TB202	29	27	A4J205	17	20	
300	25	24									
300A			0		A4J205	31	20	B11	25	16,17	
300B			4		A4J205	34	20	B11	24	16,17	
301	25	24									
301A			0		IJ202	KK	14	A4J205	45	20	
301B			4		IJ202	MM	14	A4J205	46	20	
302	25	24									
302A			0		A4J205	48	20	IIJ202	KK	14	
302B			4		A4J205	49	20	IIJ202	MM	14	

FORM AA1669

CONTROL DATA
MINNEAPOLIS, MINNESOTA

TITLE: WIRE LISTING

WL | DOCUMENT NO. 40017600 | REV. F

SHEET 20 OF

CONDUCTOR IDENT.	FIND NO.	GAUGE (REF.)	COLOR (REF.)	LENGTH (APPROX.)	ORIGIN		ACCESS FIND NO.	DESTINATION		ACCESS. FIND NO.	REMARKS
303	25	24									
303A			0		A7	1	16,17	A3TB202	20	27	
303B			4		A7	5	16,17	A3TB202	18	27	
304	25	24									
304A			0		A3TB202	14	27	A7	18	16,17	
304B			4		A3TB202	12	27	A7	17	16,17	
305	25	24									
305A			0		A7	28	16,17	A3TB202	32	27	
305B			4		A7	29	16,17	A3TB202	30	27	
306	25	24									
306A			0		A3TB202	26	27	A7	44	16,17	
306B			4		A3TB202	24	27	A7	45	16,17	
307	25	24									
307A			0		B7	1	16,17	A4TB202	20	27	
307B			4		B7	5	16,17	A4TB202	18	27	
308	25	24									
308A			0		A4TB202	14	27	B7	18	16,17	
308B			4		A4TB202	12	27	B7	17	16,17	

FORM AA1669

CONTROL DATA
MINNEAPOLIS, MINNESOTA

TITLE: WIRE LISTING

WL | DOCUMENT NO. 40017600 | REV. F

SHEET 21 OF

CONDUCTOR IDENT.	FIND NO.	GAUGE (REF.)	COLOR (REF.)	LENGTH (APPROX.)	ORIGIN		ACCESS FIND NO	DESTINATION		ACCESS. FIND NO.	REMARKS
309	25	24									
309A			0		B7	28	16,17	A4TB202	32	27	
309B			4		B7	29	16,17	A4TB202	30	27	
310	25	24									
310A			0		A4TB202	26	27	B7	44	16,17	
310B			4		A4TB202	24	27	B7	45	16,17	
311	12	24	4		A4S202	4	22	B17	26	16,17	
312	12	24	4		J206	$\overline{b}$	20	A18	42	16,17	
313	12	24	4		J206	EE	20	B18	42	16,17	
315	28	20									
315A			SHIELD		A3J205	29	19	A11	28	29,31	
315B			0		A3J205	30	19	A11	26	29,30	
315C			2		A3J205	33	19	A11	18	29,30	
316	28	20									
316A			SHIELD		A4J205	29	19	B11	28	29,31	
316B			0		A4J205	30	19	B11	26	29,30	
316C			2		A4J205	33	19	B11	18	29,30	

FORM AA 1669

CONTROL DATA
MINNEAPOLIS, MINNESOTA

TITLE: WIRE LISTING

WL | DOCUMENT NO. 40017600 | REV. F

SHEET 22 OF 22

CONDUCTOR IDENT.	FIND NO.	GAUGE (REF.)	COLOR (REF.)	LENGTH (APPROX.)	ORIGIN		ACCESS FIND NO.	DESTINATION		ACCESS. FIND NO.	REMARKS
320	33	24									
320A			SHIELD		A3J205	79	19 (44)	A22	8	16,17	
320B			9		A3J205	80	20	A22	5	16,17	
321	33	24									
321A			SHIELD		A22	8	16,17	A3J205	79	(44)	
321B			9		A22	9	16,17	A3J205	82	20	
322	33	24									
322A			SHIELD		A4J205	79	19 (45)	B22	8	16,17	
322B			9		A4J205	80	20	B22	5	16,17	
323	33	24									
323A			SHIELD		B22	8	16,17	A4J205	79	(45)	
323B			9		B22	9	16,17	A4J205	82	20	
324	11	20	4		A29	48	29,30	TB203	9	32	
325	11	20	4		TB203	10	32	B29	48	29,30	
326	12	24	4		A3J205	42	20	TB203	2	(47)	
327	↑	↑	↑		A4J205	42	↑	TB203	2	(47) 35	
328	↓	↓	↓		A3J205	43	↓	J206	$\overline{a}$	20	
329					A4J205	43	20	J206	DD	20	
330	12	24	4		A4S202	05	22	B17	5	16,17	

FORM AA 1669

CONTROL DATA MINNEAPOLIS, MINNESOTA	TITLE WIRE LIST - LOGIC CHASSIS HARNESS ASSY	WL	DOCUMENT NO. 70715000	REV. K
	PRODUCT MULTIPLE DISK DRIVE		SHEET 1 OF 23	

REVISION STATUS OF SHEETS

REVISIONS

REV.	ECO	DESCRIPTION	DRFT.	DATE	CHKD.	APPD.
A		RELEASED		11-29-68		[illegible]
B	PM4660	SEE CO	DB	2-18-69	97	2-20-69
C	PM5578	SEE CO	GV	7-10-69	DCH	7-18
D	PM5578A	SEE CO	GV	7-10-69	DCH	7-18
E	PE11118	SEE CO	DS	9-17-69	97	9-18-9
F	11118 A	DWG NO WAS 40017600	DC	12-17-69	97 12/18	I-R
G	PE11451	ADDED NOTE 3 & CHG WL	DC	3/31/70	97	II
H	PE11444	CHG WL 320 A & 322 A	DC	3/31/70	97	II
J	PE11290	ADDED 331 - 338	DC	3/31/70	97	I-R
K	PE11451A	CHG NOTE 3 & WL	DC	3/31/70	97	II

NOTES:

DN 70715000
DETACHED LISTS

COPIES TO

BY	SD	DATE 10-10	CHKD.	C.M.	DATE 11/11/68	ENGR	[illegible]

CONTROL DATA MINNEAPOLIS, MINNESOTA	TITLE WIRE LISTING	WL	DOCUMENT NO. 70715000	REV. K
			SHEET 2 OF	

CONDUCTOR IDENT.	FIND NO.	GAUGE (REF.)	COLOR (REF.)	LENGTH (APPROX.)	ORIGIN		ACCESS. FIND NO.	DESTINATION		ACCESS. FIND NO.	REMARKS
1	11	20	4		J204	42	13	J206	M	19	
2					J206	N	19	J204	43	13	
3					J204	45	13	J206	R	19	
4					J206	S	19	J204	46	13	
5					J204	48	9 (1)	IJ202	U	13	
6					IIJ202	U	13	J204	48	(1)	
7					J204	51	13	J206	$\overline{j}$	19	
8					J206	$\overline{k}$	19	J204	52	13	
9					J204	53	13	J206	HH	19	
10					J206	$\overline{m}$	19	J204	54	13	
11					J204	55	13	J206	$\overline{n}$	19	
12					J206	$\overline{p}$	19	J204	56	13	
13					J204	57	13	J206	$\overline{r}$	19	
14					J206	$\overline{s}$	19	J204	58	13	
15					J204	60	13	J206	$\overline{u}$	19	
16					J206	$\overline{v}$	19	J204	62	13	
17					J204	64	9 (2)	IJ202	X	13	
18					IIJ202	X	13	J204	64	(2)	
19	11	20	4		J204	65	9 (3)	IJ202	Y	13	

FORM AA1669

CONTROL DATA
MINNEAPOLIS, MINNESOTA

TITLE: WIRE LISTING

WL | DOCUMENT NO. 70715000 | REV. K

SHEET 3 OF

CONDUCTOR IDENT.	FIND NO.	GAUGE (REF.)	COLOR (REF.)	LENGTH (APPROX.)	ORIGIN		ACCESS. FIND NO.	DESTINATION		ACCESS. FIND NO.	REMARKS
20	11	20	4		IJ202	Y	13	J204	65	(3)	
21					J204	66	9 (4)	IJ202	Z	13	
22					IJ202	Z	13	J204	66	(4)	
23					J204	16	13	A4J205	21	19	
24					A3J205	18	19	J204	24	13	
25					J204	26	13	A3J205	21	19	
26					A4J205	18	19	J204	33	13	
27					J204	36	13	J206	E	19	
28					J206	F	19	J204	37	13	
29					J204	39	13	J206	J	19	
30					J206	K	19	J204	40	13	
31					J204	41	13	J206	L	19	
32					J206	T	19	A3J205	25	19	
33					A3J205	32	19	TB203	1	32 (5)	
34					TB203	3	32	A3J205	35	19	
35					A3J205	36	19	TB203	7	15 (6)	
36					TB203	8	32	A4J205	36	19	
37					A4J205	35	19	TB203	4	32	
38	11	20	4		TB203	2	32 (6)	A4J205	32	19	

CONTROL DATA
MINNEAPOLIS, MINNESOTA

TITLE: WIRE LISTING

WL | DOCUMENT NO. 70715000 | REV. K

SHEET 4 OF

CONDUCTOR IDENT.	FIND NO.	GAUGE (REF.)	COLOR (REF.)	LENGTH (APPROX.)	ORIGIN		ACCESS. FIND NO.	DESTINATION		ACCESS. FIND NO.	REMARKS
39	11	20	4		A4J205	25	19	J206	W	19	
40					A3TB202	35	21 (7)	A3TB202	33	21 (8)	
41					A3TB202	33	(8)	A3TB202	27	21 (9)	
42					A3TB202	27	(9)	A3TB202	21	21 (10)	
43					A3TB202	21	(10)	A3TB202	15	21 (11)	
44					A3TB202	15	(11)	A3TB202	9	27	
45					A4TB202	35	21 (12)	A4TB202	33	21 (13)	
46					A4TB202	33	(13)	A4TB202	27	21 (14)	
47					A4TB202	27	(14)	A4TB202	21	21 (15)	
48					A4TB202	21	(15)	A4TB202	15	21 (16)	
49					A4TB202	15	(16)	A4TB202	9	27	
50					TB203	3	15 (17)	A23	46	29,30	
51					A17	46	29,30	TB203	3	(17)	
52					TB203	3	15 (18)	A11	46	29,30	
53					B23	46	29,30	TB203	4	15 (19)	
54					TB203	4	(19)	B17	46	29,30	
55					B11	46	29,30	TB203	4	15 (1)	
56					TB203	5	32	A29	46	29,30	
57	11	20	4		B29	46	29,30	TB203	5	32	

FORM AA1669

CONTROL DATA
MINNEAPOLIS, MINNESOTA

TITLE: WIRE LISTING

WL | DOCUMENT NO. 70715000 | REV. K

SHEET 5 OF

CONDUCTOR IDENT.	FIND NO.	GAUGE (REF.)	COLOR (REF.)	LENGTH (APPROX.)	ORIGIN		ACCESS. FIND NO.	DESTINATION		ACCESS. FIND NO.	REMARKS
58	11	20	4		TB203	5	32	A26	46	29,30	
59					B26	46	29,30	TB203	5	32	
60					TB203	6	32	A29	6	29,30	
61					B29	6	29,30	TB203	6	32	
62					TB203	6	32	A26	6	29,30	
63					B26	6	29,30	TB203	6	32	
64					TB203	7	15 (20)	A23	6	29,30	
65					A17	6	29,30	TB203	7	15 (21)	
66					TB203	7	(21)	A11	6	29,30	
67					B23	6	29,30	TB203	8	15 (22)	
68					TB203	8	15,42	B17	6	29,30	
69					B11	6	29,30	TB203	8	(49)	
70					TB203	9	15 (23)	A23	48	29,30	
71					A17	48	29,30	TB203	9	32	
72					TB203	9	15 (24)	A10	48	29,30	
73					B23	48	29,30	TB203	10	15 (25)	
74					TB203	10	15 (26)	B17	48	29,30	
75					B10	48	29,30	TB203	10	32	
76	11	20	4		TB203	13	15 (27)	IJ202	R	13	

CONTROL DATA
MINNEAPOLIS, MINNESOTA

TITLE: WIRE LISTING

WL | DOCUMENT NO. 70715000 | REV. K

SHEET 6 OF

CONDUCTOR IDENT.	FIND NO.	GAUGE (REF.)	COLOR (REF.)	LENGTH (APPROX.)	ORIGIN		ACCESS. FIND NO.	DESTINATION		ACCESS. FIND NO.	REMARKS
77	11	20	4		IIJ202	R	13	TB203	16	15 (28)	
78					A3TB202	36	27	A3TB202	6	21 (29)	
79					A3TB202	6	(29)	TB203	1	15 (30)	
80					TB203	1	(30)	A4TB202	6	21 (31)	
81					A4TB202	6	(31)	A4TB202	36	27	
82					TB203	4	(61)	B05	46	29,30	
83					B05	48	29,30	TB203	10	(28)	
84					TB203	3	(48)	A05	46	29,30	
85					A05	48	29,30	TB203	9	(24)	
86					A05	6	29,30	TB203	7	(46)	
87					TB203	8	32	B05	6	29,30	
88					A26	48	29,30	TB203	9	32	
89	11	20	4		TB203	10	32	B26	48	29,30	
90	12	24	4		A3TB204	1	22	J204	44	14	
91					J204	49	13 (32)	IJ202	V	14	
92					IIJ202	V	14	J204	49	(32)	
93					J204	50	13 (63)	IJ202	W	14	
94					IIJ202	W	14	J204	50	(63)	
95	12	24	4		J204	59	14	A4TB204	1	22	

FORM AA1669

CONTROL DATA
MINNEAPOLIS, MINNESOTA

TITLE: WIRE LISTING

WL | DOCUMENT NO. 70715000 | REV. K

SHEET 7 OF

CONDUCTOR IDENT.	FIND NO.	GAUGE (REF.)	COLOR (REF.)	LENGTH (APPROX)	ORIGIN		ACCESS. FIND NO.	DESTINATION		ACCESS. FIND NO.	REMARKS
96	12	24	4		A3TP201	–	22	J204	67	14	
97					J204	70	14	A4TP201	–	22	
98					A3J205	39	20	A8	1	23,24	
99					A7	13	23,24	A3J205	23	20	
100					J204	4	14	B7	37	16,17	
101					B8	45	16,17	J204	5	14	
102					J204	7	14	A8	45	16,17	
103					A7	37	16,17	J204	8	14	
104					J204	10	14	J206	E	20	
105					J206	CC	20	J204	22	14	
106					J204	15	14	A4J205	22	20	
107					J206	H	20	J204	25	14	
108					J204	27	14	A3J205	22	20	
109					A3J205	26	20	A8	2	16,17	
110					A8	1	16,17	A3J205	27	20	
111					A3J205	28	20	A3TB204	2	22	
112					A11	30	16,17	A3J205	37	20	
113					A3J205	38	20	A11	45	16,17	
114	12	24	4		A14	1	16,17	A3J205	47	20	

CONTROL DATA
MINNEAPOLIS, MINNESOTA

TITLE: WIRE LISTING

WL | DOCUMENT NO. 70715000 | REV. K

SHEET 8 OF

CONDUCTOR IDENT.	FIND NO.	GAUGE (REF.)	COLOR (REF.)	LENGTH (APPROX)	ORIGIN		ACCESS. FIND NO.	DESTINATION		ACCESS. FIND NO.	REMARKS
115	12	24	4		A3J205	50	20	A14	8	16,17	
116					A17	16	16,17	A3J205	51	20	
117					A3J205	52	20	A14	20	16,17	
118					A14	42	16,17	A3J205	53	20	
119					A3J205	54	20	A14	37	16,17	
120					A14	36	16,17	A3J205	55	20	
121					A3J205	56	20	A15	42	16,17	
122					A15	45	16,17	A3J205	57	20	
123					A3J205	58	20	A15	9	16,17	
124					A15	29	16,17	A3J205	59	20	
125					A3J205	60	20	A15	24	16,17	
126					A15	13	16,17	A3J205	62	20	
127					A3J205	63	20	A15	22	16,17	
128					A15	40	16,17	A3J205	64	20	
129					A3J205	65	20	A15	33	16,17	
130					A15	14	16,17	A3J205	66	20	
131					A3J205	67	20	A15	28	16,17	
132					A15	34	16,17	A3J205	70	20	
133	12	24	4		A3J205	71	20	A15	12	16,17	

FORM AA1669

CONTROL DATA
MINNEAPOLIS, MINNESOTA

TITLE: WIRE LISTING

WL | DOCUMENT NO. 70715000 | REV. K

SHEET 9 OF

CONDUCTOR IDENT.	FIND NO.	GAUGE (REF.)	COLOR (REF.)	LENGTH (APPROX.)	ORIGIN		ACCESS. FIND NO.	DESTINATION		ACCESS. FIND NO.	REMARKS
134	12	24	4		A15	21	16,17	A3J205	72	20	
135	↑	↑	↑		A3J205	73	20	A15	20	16,17	
136					A15	38	16,17	A3J205	74	20	
137					A3J205	75	20	A15	36	16,17	
138					A15	16	16,17	A3J205	76	20	
139					A3J205	77	20	A15	17	16,17	
140					A15	25	16,17	A3J205	78	20	
141					A4J205	39	20	B8	1	16,17	
142					B7	13	16,17	A4J205	23	20	
143					A4J205	24	20	J206	d	20	
144					A4J205	26	20	B8	2	16,17	
145					B8	1	16,17	A4J205	27	20	
146					A4J205	28	20	A4TB204	2	22	
147					B11	30	16,17	A4J205	37	20	
148					A4J205	38	20	B11	45	16,17	
149					B14	1	16,17	A4J205	47	20	
150	↓	↓	↓		A4J205	50	20	B14	8	16,17	
151					B17	16	16,17	A4J205	51	20	
152	12	24	4		A4J205	52	20	B14	20	16,17	

FORM AA1669

CONTROL DATA
MINNEAPOLIS, MINNESOTA

TITLE: WIRE LISTING

WL | DOCUMENT NO. 70715000 | REV. K

SHEET 10 OF

CONDUCTOR IDENT.	FIND NO.	GAUGE (REF.)	COLOR (REF.)	LENGTH (APPROX.)	ORIGIN		ACCESS. FIND NO.	DESTINATION		ACCESS. FIND NO.	REMARKS
153	12	24	4		B14	42	16,17	A4J205	53	20	
154	↑	↑	↑		A4J205	54	20	B14	37	16,17	
155					B14	36	16,17	A4J205	55	20	
156					A4J205	56	20	B15	42	16,17	
157					B15	45	16,17	A4J205	57	20	
158					A4J205	58	20	B15	9	16,17	
159					B15	29	16,17	A4J205	59	20	
160					A4J205	60	20	B15	24	16,17	
161					B15	13	16,17	A4J205	62	20	
162					A4J205	63	20	B15	22	16,17	
163					B15	40	16,17	A4J205	64	20	
164					A4J205	65	20	B15	33	16,17	
165					B15	14	16,17	A4J205	66	20	
166					A4J205	67	20	B15	28	16,17	
167					B15	34	16,17	A4J205	70	20	
168					A4J205	71	20	B15	12	16,17	
169	↓	↓	↓		B15	21	16,17	A4J205	72	20	
170					A4J205	73	20	B15	20	16,17	
171	12	24	4		B15	38	16,17	A4J205	74	20	

FORM AA1669

CONTROL DATA
MINNEAPOLIS, MINNESOTA

TITLE: WIRE LISTING

WL | DOCUMENT NO. 70715000 | REV. K

SHEET 11 OF

CONDUCTOR IDENT.	FIND NO.	GAUGE (REF.)	COLOR (REF.)	LENGTH (APPROX.)	ORIGIN		ACCESS. FIND NO.	DESTINATION		ACCESS. FIND NO.	REMARKS
172	12	24	4		A4J205	75	20	B15	36	16,17	
173					B15	16	16,17	A4J205	76	20	
174					A4J205	77	20	B15	17	16,17	
175					B15	25	16,17	A4J205	78	20	
176					J206	B	20	A17	34	16,17	
177					A17	08	16,17	J206	D	20	
178					J206	C	20	TB203	3	32 (34)	
179					TB203	1	32 (35)	J206	U	20	
180					J206	V	20	A19	1	16,17	
181					A19	20	16,17	J206	W	20	
182					J206	X	20	A19	33	16,17	
183					A19	45	16,17	J206	Y	20	
184					J206	P	20	A3TB204	3	22	
185					A4TB204	3	22	J206	$\bar{t}$	20	
186					J206	$\bar{h}$	20	B17	08	16,17	
187					B17	34	16,17	J206	$\bar{e}$	20	
188					J206	$\bar{f}$	20	TB203	4	32 (36)	
189					TB203	2	32 (37)	J206	$\bar{x}$	20	
190	12	24	4		J206	$\bar{y}$	20	B19	1	16,17	

CONTROL DATA
MINNEAPOLIS, MINNESOTA

TITLE: WIRE LISTING

WL | DOCUMENT NO. 70715000 | REV. K

SHEET 12 OF

CONDUCTOR IDENT.	FIND NO.	GAUGE (REF.)	COLOR (REF.)	LENGTH (APPROX.)	ORIGIN		ACCESS. FIND NO.	DESTINATION		ACCESS. FIND NO.	REMARKS
191	12	24	4		B19	20	16,17	J206	$\bar{z}$	20	
192					J206	AA	20	B19	33	16,17	
193					B19	45	16,17	J206	BB	20	
194					A3TB202	7	21,48	A3TB202	2	27	
195					A3TB202	5	21 (38)	A3TB202	1	27	
196					A3TB202	30	27	A3TB202	31	27	
197					A3TB202	24	27	A3TB202	25	27	
198					A3TB202	18	27	A3TB202	19	27	
199					A3TB202	12	27	A3TB202	13	27	
200					A3TB202	34	27	A3TB202	31	27	
201					A3TB202	28	27	A3TB202	25	27	
202					A3TB202	22	27	A3TB202	19	27	
203					A3TB202	16	27	A3TB202	14	27	
204					A3TB202	5	(38)	A3TB202	8	27	
205					A3TB202	7	48	A3TB202	10	27	
206					A4TB202	7	21,49	A4TB202	2	27	
207					A4TB202	5	21 (39)	A4TB202	1	27	
208					A4TB202	30	27	A4TB202	31	27	
209	12	24	4		A4TB202	24	27	A4TB202	25	27	

FORM AA1669

CONTROL DATA
MINNEAPOLIS, MINNESOTA

TITLE: WIRE LISTING

WL | DOCUMENT NO. 70715000 | REV. K

SHEET 13 OF

CONDUCTOR IDENT.	FIND NO.	GAUGE (REF.)	COLOR (REF.)	LENGTH (APPROX.)	ORIGIN		ACCESS. FIND NO.	DESTINATION		ACCESS. FIND NO.	REMARKS
210	12	24	4		A4TB202	18	27	A4TB202	19	27	
211					A4TB202	12	27	A4TB202	13	27	
212					A4TB202	34	27	A4TB202	31	27	
213					A4TB202	28	27	A4TB202	25	27	
214					A4TB202	22	27	A4TB202	19	27	
215					A4TB202	16	27	A4TB202	14	27	
216					A4TB202	5	(39)	A4TB202	8	27	
217					A4TB202	7	(49)	A4TB202	10	27	
218					TB203	1	(5)	A3TP200	—	22	
219					A3TP203	—	22	TB203	3	(34)	
220					TB203	2	(6)	A4TP200	—	22	
221					A4TP203	—	22	TB203	4	(36)	
222					TB203	7	(20)	A3TP204	—	22	
223					A3TP202	—	22	TB203	9	(23)	
224					TB203	8	(22)	A4TP204	—	22	
225					A4TP202	—	22	TB203	10	(25)	
226					TB203	13	15 (27)	IJ202	N	14	
227					IJ200	80	20	TB203	13	32 (40)	
228	12	24	4		TB203	13	(40)	IJ201	80	20	

CONTROL DATA
MINNEAPOLIS, MINNESOTA

TITLE: WIRE LISTING

WL | DOCUMENT NO. 70715000 | REV. K

SHEET 14 OF

CONDUCTOR IDENT.	FIND NO.	GAUGE (REF.)	COLOR (REF.)	LENGTH (APPROX.)	ORIGIN		ACCESS. FIND NO.	DESTINATION		ACCESS. FIND NO.	REMARKS
229	12	24	4		A30	2	16,17	TB203	13	32 (41)	
230					TB203	13	(41)	A30	50	16,17	
231					IIJ202	N	14	TB203	16	(28)	
232					TB203	16	32 (42)	IIJ200	80	20	
233					IIJ201	80	20	TB203	16	(42)	
234					TB203	16	32 (43)	B30	2	16,17	
235					B30	50	16,17	TB203	16	(43)	
236					TB203	1	(39)	A3TB204	7	22	
237					A3TB204	4	22	A14	45	16,17	
238					B14	45	16,17	A4TB204	4	22	
239					A4TB204	7	22	TB203	2	(37)	
240					A3TB202	36	27	A3TB202	37	27	
241					A4TB202	36	27	A4TB202	37	27	
242					A22	25	16,17	A3J205	40	20	
243					A3J205	41	20	A22	18	16,17	
244					B22	25	16,17	A4J205	40	20	
245					A4J205	41	20	B22	18	16,17	
246					A3J205	24	20	J206	A	20	
247	12	24	4		A4S202	3	22	B17	9	16,17	

FORM AA1669

CONTROL DATA
MINNEAPOLIS, MINNESOTA

TITLE: WIRE LISTING

WL | DOCUMENT NO. 70715000 | REV. K

SHEET 15 OF

CONDUCTOR IDENT.	FIND NO.	GAUGE (REF.)	COLOR (REF.)	LENGTH (APPROX.)	ORIGIN		ACCESS. FIND NO.	DESTINATION		ACCESS. FIND NO.	REMARKS
248	12	24	4		A3S202	2	22	A17	33	16,17	
249					A3S202	3		A17	9		
250					A3S202	4		A17	26		
251					A3S202	5		A17	5		
252					A4S202	C		B17	32		
253					A4S202	1		B17	44		
254	12	24	4		A4S202	2	22	B17	33	16,17	
255	10	16	4		A3J205	1	18	TB203	3	15	
256					TB203	7	15	A3J205	2	18	
257					A3J205	3	18	J204	21	9	
258					A3J205	20	18	TB203	1	34,50	
259					TB203	1	50	J204	1	9	
260					J204	2	9	TB203	1	15	
261					TB203	2	15	J204	3	9	
262					J204	11	9	TB203	6	15	
263					TB203	5	15	J204	12	9	
264					J204	13	9	TB203	9	15	
265					TB203	10	15	J204	14	9	
266	10	16	4		J204	17	9	A3TB202	35	21	

CONTROL DATA
MINNEAPOLIS, MINNESOTA

TITLE: WIRE LISTING

WL | DOCUMENT NO. 70715000 | REV. K

SHEET 16 OF

CONDUCTOR IDENT.	FIND NO.	GAUGE (REF.)	COLOR (REF.)	LENGTH (APPROX.)	ORIGIN		ACCESS. FIND NO.	DESTINATION		ACCESS. FIND NO.	REMARKS
267	10	16	4		TB203	3	15	J204	18	9	
268					J204	20	9	TB203	4	15	
269					TB203	7	15	J204	28	9	
270					J204	29	9	TB203	8	15	
271					A4J205	3	18	J204	30	9	
272					J204	35	9	A4TB202	35	21	
273					TB203	4	15	A4J205	1	18	
274					A4J205	20	18	TB203	2	15	
275					TB203	1	15	TOP BUSS BAR	—	23,24	
276					MIDDLE BUSS BAR	—	23,24	TB203	2	34	
277					TB203	2		BOTTOM BUSS BAR	—	23,24	
278	10	16	4		TB203	8	15	A4J205	2	18	
279	12	24	4		A3S201	1	16	A17	41	16,17	
280					A4S201	1	16	B17	41		
281					A3DS200	B	27	A17	42		
282					A4DS200	B	27	B17	42		
283					A3S202	C	22	A17	32		
284	12	24	4		A3S202	1	22	A17	44	16,17	

FORM AA1669

CONTROL DATA
MINNEAPOLIS, MINNESOTA

TITLE: WIRE LISTING

WL | DOCUMENT NO. 70715000 | REV. K

SHEET 17 OF

CONDUCTOR IDENT.	FIND NO.	GAUGE (REF.)	COLOR (REF.)	LENGTH (APPROX.)	ORIGIN		ACCESS. FIND NO.	DESTINATION		ACCESS. FIND NO.	REMARKS
285	25	24									
285A			0		A3J205	4	20	A3TB202	35	(7)	
285B			4		A3J205	8	20	A3TB202	37	27	
286	25	24									
286A			0		A3TB202	9	27	A3J205	5	20	
286B			4		A3TB202	7	27	A3J205	10	20	
287	25	24									
287A			0		A3J205	7	20	A3TB202	15	27	
287B			4		A3J205	11	20	A3TB202	11	27	
288	25	24									
288A			0		A3TB202	21	27	A3J205	12	20	
288B			4		A3TB202	17	27	A3J205	15	20	
289	25	24									
289A			0		A3J205	13	20	A3TB202	27	27	
289B			4		A3J205	16	20	A3TB202	23	27	
290	25	24									
290A			0		A3TB202	33	27	A3J205	14	20	
290B			4		A3TB202	29	27	A3J205	17	20	

CONTROL DATA
MINNEAPOLIS, MINNESOTA

TITLE: WIRE LISTING

WL | DOCUMENT NO. 70715000 | REV. K

SHEET 18 OF

CONDUCTOR IDENT.	FIND NO.	GAUGE (REF.)	COLOR (REF.)	LENGTH (APPROX.)	ORIGIN		ACCESS. FIND NO.	DESTINATION		ACCESS. FIND NO.	REMARKS
291	25	24									
291A			0		A3J205	31	20	A11	25	16,17	
291B			4		A3J205	34	20	A11	24	16,17	
292	25	24									
292A			0		IJ202	K	14	A3J205	45	20	
292B			4		IJ202	M	14	A3J205	46	20	
293	25	24									
293A			0		A3J205	48	20	IIJ202	K	14	
293B			4		A3J205	49	20	IIJ202	M	14	
294	25	24									
294A			0		A4J205	4	20	A4TB202	35	(12)	
294B			4		A4J205	8	20	A4TB202	37	27	
295	25	24									
295A			0		A4TB202	9	27	A4J205	5	20	
295B			4		A4TB202	7	27	A4J205	10	20	
296	25	24									
296A			0		A4J205	7	20	A4TB202	15	27	
296B			4		A4J205	11	20	A4TB202	11	27	

FORM AA1669

CONTROL DATA
MINNEAPOLIS, MINNESOTA

TITLE: WIRE LISTING

WL | DOCUMENT NO. 70715000 | REV. K

SHEET 19 OF

CONDUCTOR IDENT.	FIND NO.	GAUGE (REF.)	COLOR (REF.)	LENGTH (APPROX.)	ORIGIN		ACCESS. FIND NO.	DESTINATION		ACCESS. FIND NO.	REMARKS
297	25	24									
297A			0		A4TB202	21	27	A4J205	12	20	
297B			4		A4TB202	17	27	A4J205	15	20	
298	25	24									
298A			0		A4J205	13	20	A4TB202	27	27	
298B			4		A4J205	16	20	A4TB202	23	27	
299	25	24									
299A			0		A4TB202	33	27	A4J205	14	20	
299B			4		A4TB202	29	27	A4J205	17	20	
300	25	24									
300A			0		A4J205	31	20	B11	25	16,17	
300B			4		A4J205	34	20	B11	24	16,17	
301	25	24									
301A			0		IJ202	KK	14	A4J205	45	20	
301B			4		IJ202	MM	14	A4J205	46	20	
302	25	24									
302A			0		A4J205	48	20	IIJ202	KK	14	
302B			4		A4J205	49	20	IIJ202	MM	14	

CONTROL DATA
MINNEAPOLIS, MINNESOTA

TITLE: WIRE LISTING

WL | DOCUMENT NO. 70715000 | REV. K

SHEET 20 OF

CONDUCTOR IDENT.	FIND NO.	GAUGE (REF.)	COLOR (REF.)	LENGTH (APPROX.)	ORIGIN		ACCESS. FIND NO.	DESTINATION		ACCESS. FIND NO.	REMARKS
303	25	24									
303A			0		A7	1	16,17	A3TB202	20	27	
303B			4		A7	5	16,17	A3TB202	18	27	
304	25	24									
304A			0		A3TB202	14	27	A7	18	16,17	
304B			4		A3TB202	12	27	A7	17	16,17	
305	25	24									
305A			0		A7	28	16,17	A3TB202	32	27	
305B			4		A7	29	16,17	A3TB202	30	27	
306	25	24									
306A			0		A3TB202	26	27	A7	44	16,17	
306B			4		A3TB202	24	27	A7	45	16,17	
307	25	24									
307A			0		B7	1	16,17	A4TB202	20	27	
307B			4		B7	5	16,17	A4TB202	18	27	
308	25	24									
308A			0		A4TB202	14	27	B7	18	16,17	
308B			4		A4TB202	12	27	B7	17	16,17	

M AA 1669

CONTROL DATA
MINNEAPOLIS, MINNESOTA

TITLE: WIRE LISTING

WL | DOCUMENT NO. 70715000 | REV. K

SHEET 21 OF

CONDUCTOR IDENT.	FIND NO.	GAUGE (REF.)	COLOR (REF.)	LENGTH (APPROX)	ORIGIN		ACCESS. FIND NO.	DESTINATION		ACCESS. FIND NO.	REMARKS
309	25	24									
309A			0		B7	28	16,17	A4TB202	32	27	
309B			4		B7	29	16,17	A4TB202	30	27	
310	25	24									
310A			0		A4TB202	26	27	B7	44	16,17	
310B			4		A4TB202	24	27	B7	45	16,17	
311	12	24	4		A4S202	4	22	B17	26	16,17	
312	12	24	4		J206	b	20	A18	42	16,17	
313	12	24	4		J206	EE	20	B18	42	16,17	
315	28	20									
315A			SHIELD		A3J205	29	19	A11	28	29,31	
315B			0		A3J205	30	19	A11	26	29,30	
315C			2		A3J205	33	19	A11	18	29,30	
316	28	20									
316A			SHIELD		A4J205	29	19	B11	28	29,31	
316B			0		A4J205	30	19	B11	26	29,30	
316C			2		A4J205	33	19	B11	18	29,30	

CONTROL DATA
MINNEAPOLIS, MINNESOTA

TITLE: WIRE LISTING

WL | DOCUMENT NO. 70715000 | REV. K

SHEET 22 OF 23

CONDUCTOR IDENT.	FIND NO.	GAUGE (REF.)	COLOR (REF.)	LENGTH (APPROX)	ORIGIN		ACCESS. FIND NO.	DESTINATION		ACCESS. FIND NO.	REMARKS
320	33	24									
320A			SHIELD		A3J205	79	36,37 19 44	A22	10	36,37 16,17	
320B			9		A3J205	80	12,20	A22	5	12 16,17	
321	33	24									
321A			SHIELD		A22	8	36,37 16,17	A3J205	79	36,37 44	
321B			9		A22	9	12 16,17	A3J205	82	20,12	
322	33	24									
322A			SHIELD		A4J205	79	36,37 19 45	B22	10	36,37 16,17	
322B			9		A4J205	80	12,20	B22	5	12 16,17	
323	33	24									
323A			SHIELD		B22	8	36,37 16,17	A4J205	79	36,37 45	
323B			9		B22	9	12 16,17	A4J205	82	20,12	
324	11	20	4		A29	48	29,30	TB203	9	32	
325	11	20	4		TB203	10	32	B29	48	29,30	
326	12	24	4		A3J205	42	20	TB203	2	47	
327	↑	↑	↑		A4J205	42	↑	TB203	2	47 35	
328	↓	↓	↓		A3J205	43	↓	J206	a	20	
329					A4J205	43	20	J206	DD	20	
330	12	24	4		A4S202	05	22	B17	5	16,17	

FORM AA1669

CONTROL DATA	NORMANDALE OPERATIONS	CODE IDENT 19333	SHEET 23 OF 27	WL	DOCUMENT NO. 70715000	REV. K

CONDUCTOR IDENT.	FIND NO.	GAUGE (REF.)	COLOR (REF.)	LENGTH (APPROX)	ORIGIN		ACCESS FIND NO	DESTINATION		ACCESS FIND NO	REMARKS
331	12	24	4		A3TB202	39	21 ⟨53⟩	A3S200	A1	22	
332	↑	↑	↑		A3TB202	39	⟨53⟩	A18	28	16,17	
333					A3TB202	38	27	A25	26	16,17	
334					A3TB202	40	27	B25	26	16,17	
335					A4TB202	39	21 ⟨54⟩	A4S200	A1	22	
336					A4TB202	39	⟨54⟩	B18	28	16,17	
337	↓	↓	↓		A4TB202	38	27	A25	34	16,17	
338	12	24	4		A4TB202	40	27	B25	34	16,17	

CONTROL DATA	WIRING (Corrections)	CODE IDENT	SHEET	WL	DOCUMENT NO.	REV.

CONDUCTOR IDENT.	FIND NO.	GAUGE (REF.)	COLOR (REF.)	LENGTH (APPROX)	ORIGIN		ACCESS FIND NO	DESTINATION		ACCESS FIND NO	REMARKS

CONTROL DATA
MINNEAPOLIS, MINNESOTA

TITLE: WIRE LIST - LOGIC CHASSIS HARNESS ASSY
PRODUCT: MULTIPLE DISK DRIVE
WL | DOCUMENT NO. 72971100 | REV. A
SHEET 1 OF 23

REVISION STATUS OF SHEETS

REVISIONS

REV.	ECO	DESCRIPTION	DRFT.	DATE	CHKD.	APPD
A		RELEASED		11/2/67		
B	PM3660	SEE CO	DB	2-18-69	JT	2-26-69
C	PM5578	SEE CO	GV	7-10-69	DCH	7-18
D	PM5578A	SEE CO	GV	7-10-69	DCH	7-18
E	PE11118	SEE CO	DS	9-17-69	97	9-18-9
F	11118 A	DWG NO WAS 40017600	DC	12-17-69	97 11/18	I-R
G	PE11451	ADDED NOTE 3 & CHG WL	DC	3/31/70	97	II
H	PE11444	CHG WL 320A & 322A	DC	3/31/70	97	II
J	PE11290	ADDED 331 - 338	DC	3/31/70	97	I-R
K	PE11451A	CHG NOTE 3 & WL	DC	3/31/70	97	II
L	PE21296	Dwg No. WAS 70715000	JRO	6/26/70	97	I-R

NOTES:

1. A HEXAGON IN THE ACCESS FIND NO. COLUMN INDICATES THAT THE CONDUCTOR IS ONE OF SEVERAL (ALL WITH THE SAME NUMBER IN THE HEXAGON) GOING INTO THE SAME TERMINAL. THE NUMBER IN FRONT OF A HEXAGON IS THE TERMINAL FIND NO.
2. FOR MECH ASSY AND PL SEE 70821200.
3. CRIMP FIND NO 13 TO THE CONDUCTOR AND FIND NO 37 TO THE SHIELD USING FIND NO 35. THEN TERMINATE BOTH JUMPERS USING FIND NO'S INDICATED IN ACCESS FIND NO. COLUMN.

⚠ FIND NO'S & ACCESS FIND'S SHALL BE FOUND ON FILTER BOARD PL 70816100 FOR COND IDENT 340 THRU 349.

DN 72971100
DETACHED LISTS

COPIES TO

BY SD | DATE 10-10 | CHKD. C.M. | DATE 11/11/68 | ENGR | DATE 7/10/6

CONTROL DATA
MINNEAPOLIS, MINNESOTA

TITLE: WIRE LISTING
WL | DOCUMENT NO. 72971100 | REV. A
SHEET 2 OF

CONDUCTOR IDENT.	FIND NO.	GAUGE (REF.)	COLOR (REF.)	LENGTH (APPROX)	ORIGIN		ACCESS FIND NO	DESTINATION		ACCESS. FIND NO.	REMARKS
1	11	20	4		J204	42	13	J206	M	19	
2					J206	N	19	J204	43	13	
3					J204	45	13	J206	R	19	
4					J206	S	19	J204	46	13	
5					J204	48	9 ⟨1⟩	IJ202	U	13	
6					IJ207	U	13	J204	48	⟨1⟩	
7					J204	51	13	J206	J	19	
8					J206	k	19	J204	52	13	
9					J204	53	13	J206	HH	19	
10					J206	m	19	J204	54	13	
11					J204	55	13	J206	n	19	
12					J206	p	19	J204	56	13	
13					J204	57	13	J206	r	19	
14					J206	s	19	J204	58	13	
15					J204	60	13	J206	u	19	
16					J206	v	19	J204	62	13	
17					J204	64	9 ⟨2⟩	IJ202	X	13	
18					IJ202	X	13	J204	64	⟨2⟩	
19	11	20	4		J204	65	9 ⟨3⟩	IJ202	Y	13	

FORM AA1669

CONTROL DATA
MINNEAPOLIS, MINNESOTA

TITLE: WIRE LISTING

WL | DOCUMENT NO. 72971100 | REV. N

SHEET 3 OF

CONDUCTOR IDENT.	FIND NO.	GAUGE (REF.)	COLOR (REF.)	LENGTH (APPROX.)	ORIGIN		ACCESS. FIND NO.	DESTINATION		ACCESS. FIND NO.	REMARKS
20	11	20	4		J202	Y	13	J204	65	(3)	
21					J204	66	9 (4)	J202	Z	13	
22					J202	Z	13	J204	66	(4)	
23					J204	16	13	A4J205	21	19	
24					A3J205	18	19	J204	24	13	
25					J204	26	13	A3J205	21	19	
26					A4J205	18	19	J204	33	13	
27					J204	36	13	J206	E	19	
28					J206	F	19	J204	37	13	
29					J204	39	13	J206	J	19	
30					J206	K	19	J204	40	13	
31					J204	41	13	J206	L	19	
32					J206	T	19	A3J205	25	19	
33					A3J205	32	19	TB203	1	32 (5)	
34					TB203	3	32	A3J205	35	19	
35					A3J205	36	19	TB203	7	15 (6)	
36					TB203	8	32	A4J205	36	19	
37					A4J205	35	19	TB203	4	32	
38	11	20	4		TB203	2	32 (6)	A4J205	32	19	

CONTROL DATA
MINNEAPOLIS, MINNESOTA

TITLE: WIRE LISTING

WL | DOCUMENT NO. 72971100 | REV. N

SHEET 4 OF

CONDUCTOR IDENT.	FIND NO.	GAUGE (REF.)	COLOR (REF.)	LENGTH (APPROX.)	ORIGIN		ACCESS FIND NO.	DESTINATION		ACCESS. FIND NO.	REMARKS
39	11	20	4		A4J205	25	19	J206	W	19	
40					A3TB202	35	21 (7)	A3TB202	33	21 (8)	
41					A3TB202	33	(8)	A3TB202	27	21 (9)	
42					A3TB202	27	(9)	A3TB202	21	21 (10)	
43					A3TB202	21	(10)	A3TB202	15	21 (11)	
44					A3TB202	15	(11)	A3TB202	9	27	
45					A4TB202	35	21 (12)	A4TB202	33	21 (13)	
46					A4TB202	33	(13)	A4TB202	27	21 (14)	
47					A4TB202	27	(14)	A4TB202	21	21 (15)	
48					A4TB202	21	(15)	A4TB202	15	21 (16)	
49					A4TB202	15	(16)	A4TB202	9	27	
50					TB203	3	15 (17)	A23	46	29,30	
51					A17	46	29,30	TB203	3	(17)	
52					TB203	3	15 (18)	A10	46	29,30	
53					B23	46	29,30	TB203	4	15 (19)	
54					TB203	4	(19)	B17	46	29,30	
55					B10	46	29,30	TB203	4	15 (20)	
56					TB203	5	32	A29	46	29,30	
57	11	20	4		B29	46	29,30	TB203	5	32	

FORM AA1669

CONTROL DATA
MINNEAPOLIS, MINNESOTA

TITLE: WIRE LISTING

WL | DOCUMENT NO. 72971100 | REV. N

SHEET 5 OF

CONDUCTOR IDENT.	FIND NO.	GAUGE (REF.)	COLOR (REF.)	LENGTH (APPROX.)	ORIGIN		ACCESS. FIND NO.	DESTINATION		ACCESS. FIND NO.	REMARKS
58	11	20	4		TB203	5	32	A26	46	29,30	
59					B26	46	29,30	TB203	5	32	
60					TB203	6	32	A29	6	29,30	
61					B29	6	29,30	TB203	6	32	
62					TB203	6	32	A26	6	29,30	
63					B26	6	29,30	TB203	6	32	
64					TB203	7	15 (20)	A23	6	29,30	
65					A17	6	29,30	TB203	7	15 (21)	
66					TB203	7	(21)	A10	6	29,30	
67					B23	6	29,30	TB203	8	34 (22)	
68					TB203	8	15,49	B17	6	29,30	
69					B10	6	29,30	TB203	8	(49)	
70					TB203	9	15 (23)	A23	48	29,30	
71					A17	48	29,30	TB203	9	32	
72					TB203	9	15 (24)	A10	48	29,30	
73					B23	48	29,30	TB203	10	15 (25)	
74					TB203	10	15 (26)	B17	48	29,30	
75					B10	48	29,30	TB203	10	32	
76	11	20	4		TB203	13	15 (27)	IJ202	R	13	

CONTROL DATA
MINNEAPOLIS, MINNESOTA

TITLE: WIRE LISTING

WL | DOCUMENT NO. 72971100 | REV. N

SHEET 6 OF

CONDUCTOR IDENT.	FIND NO.	GAUGE (REF.)	COLOR (REF.)	LENGTH (APPROX.)	ORIGIN		ACCESS. FIND NO.	DESTINATION		ACCESS. FIND NO.	REMARKS
77	11	20	4		IJ202	R	13	TB203	16	15 (28)	
78					A3TB202	36	27	A3TB202	6	21 (29)	
79					A3TB202	6	(29)	TB203	1	15 (30)	
80					TB203	1	(30)	A4TB202	6	21 (31)	
81					A4TB202	6	(31)	A4TB202	36	27	
82					TB203	4	(51)	B05	46	29,30	
83					B05	48	29,30	TB203	10	(26)	
84					TB203	3	(18)	A05	46	29,30	
85					A05	48	29,30	TB203	9	(24)	
86					A05	6	29,30	TB203	7	(46)	
87					TB203	8	(22)	B05	6	29,30	
88					A26	48	29,30	TB203	9	(23)	
89	11	20	4		TB203	10	(25)	B26	48	29,30	
90	12	24	4		A3TB204	1	22	J204	44	14	
91					J204	49	13 (32)	IJ202	V	14	
92					IJ202	V	14	J204	49	(32)	
93					J204	50	13 (33)	IJ202	W	14	
94					IJ202	W	14	J204	50	(33)	
95	12	24	4		J204	59	14	A4TB204	1	22	

FORM AA1669

CONTROL DATA
MINNEAPOLIS, MINNESOTA

TITLE: WIRE LISTING

WL | DOCUMENT NO. 72971100 | REV. A

SHEET 7 OF

CONDUCTOR IDENT.	FIND NO.	GAUGE (REF.)	COLOR (REF.)	LENGTH (APPROX)	ORIGIN		ACCESS. FIND NO.	DESTINATION		ACCESS. FIND NO.	REMARKS
96	12	24	4		A3TP201	-	22	J204	67	14	
97					J204	70	14	A4TP201	-	22	
98					A3J205	39	20	A8	1	23,24	
99					A7	13	23,24	A3J205	23	20	
100					J204	4	14	B7	37	16,17	
101					B8	45	16,17	J204	5	14	
102					J204	7	14	A8	45	16,17	
103					A7	37	16,17	J204	8	14	
104					J204	10	14	J206	E	20	
105					J206	CC	20	J204	22	14	
106					J204	15	14	A4J205	22	20	
107					J206	H	20	J204	25	14	
108					J204	27	14	A3J205	22	20	
109					A3J205	26	20	A8	2	16,17	
110					A8	1	16,17	A3J205	27	20	
111					A3J205	28	20	A3TB204	2	22	
112					A11	30	16,17	A3J205	37	20	
113					A3J205	38	20	A11	45	16,17	
114	12	24	4		A14	1	16,17	A3J205	47	20	

CONTROL DATA
MINNEAPOLIS, MINNESOTA

TITLE: WIRE LISTING

WL | DOCUMENT NO. 72971100 | REV. A

SHEET 8 OF

CONDUCTOR IDENT.	FIND NO.	GAUGE (REF.)	COLOR (REF.)	LENGTH (APPROX)	ORIGIN		ACCESS. FIND NO.	DESTINATION		ACCESS. FIND NO.	REMARKS
115	12	24	4		A3J205	50	20	A14	8	16,17	
116					A17	16	16,17	A3J205	51	20	
117					A3J205	52	20	A14	20	16,17	
118					A14	42	16,17	A3J205	53	20	
119					A3J205	54	20	A14	37	16,17	
120					A14	36	16,17	A3J205	55	20	
121					A3J205	56	20	A15	42	16,17	
122					A15	45	16,17	A3J205	57	20	
123					A3J205	58	20	A15	9	16,17	
124					A15	29	16,17	A3J205	59	20	
125					A3J205	60	20	A15	24	16,17	
126					A15	13	16,17	A3J205	62	20	
127					A3J205	63	20	A15	22	16,17	
128					A15	40	16,17	A3J205	64	20	
129					A3J205	65	20	A15	33	16,17	
130					A15	14	16,17	A3J205	66	20	
131					A3J205	67	20	A15	28	16,17	
132					A15	34	16,17	A3J205	70	20	
133	12	24	4		A3J205	71	20	A15	12	16,17	

FORM AA1669

CONTROL DATA
MINNEAPOLIS, MINNESOTA

TITLE: WIRE LISTING

WL | DOCUMENT NO. 72971100 | REV. A

SHEET 9 OF

CONDUCTOR IDENT.	FIND NO.	GAUGE (REF.)	COLOR (REF.)	LENGTH (APPROX.)	ORIGIN		ACCESS. FIND NO.	DESTINATION		ACCESS. FIND NO.	REMARKS
134	12	24	4		A15	21	16,17	A3J205	72	20	
135					A3J205	73	20	A15	20	16,17	
136					A15	38	16,17	A3J205	74	20	
137					A3J205	75	20	A15	36	16,17	
138					A15	16	16,17	A3J205	76	20	
139					A3J205	77	20	A15	17	16,17	
140					A15	25	16,17	A3J205	78	20	
141					A4J205	39	20	B8	1	16,17	
142					B7	13	16,17	A4J205	23	20	
143					A4J205	24	20	J206	d	20	
144					A4J205	26	20	B8	2	16,17	
145					B8	1	16,17	A4J205	27	20	
146					A4J205	28	20	A4TB204	2	22	
147					B11	30	16,17	A4J205	37	20	
148					A4J205	38	20	B11	45	16,17	
149					B14	1	16,17	A4J205	47	20	
150					A4J205	50	20	B14	8	16,17	
151					B17	16	16,17	A4J205	51	20	
152	12	24	4		A4J205	52	20	B14	20	16,17	

CONTROL DATA
MINNEAPOLIS, MINNESOTA

TITLE: WIRE LISTING

WL | DOCUMENT NO. 72971100 | REV. A

SHEET 10 OF

CONDUCTOR IDENT.	FIND NO.	GAUGE (REF.)	COLOR (REF.)	LENGTH (APPROX.)	ORIGIN		ACCESS. FIND NO.	DESTINATION		ACCESS. FIND NO.	REMARKS
153	12	24	4		B14	42	16,17	A4J205	53	20	
154					A4J205	54	20	B14	37	16,17	
155					B14	36	16,17	A4J205	55	20	
156					A4J205	56	20	B15	42	16,17	
157					B15	45	16,17	A4J205	57	20	
158					A4J205	58	20	B15	9	16,17	
159					B15	29	16,17	A4J205	59	20	
160					A4J205	60	20	B15	24	16,17	
161					B15	13	16,17	A4J205	62	20	
162					A4J205	63	20	B15	22	16,17	
163					B15	40	16,17	A4J205	64	20	
164					A4J205	65	20	B15	33	16,17	
165					B15	14	16,17	A4J205	66	20	
166					A4J205	67	20	B15	28	16,17	
167					B15	34	16,17	A4J205	70	20	
168					A4J205	71	20	B15	12	16,17	
169					B15	21	16,17	A4J205	72	20	
170					A4J205	73	20	B15	20	16,17	
171	12	24	4		B15	38	16,17	A4J205	74	20	

FORM AA1669

CONTROL DATA
MINNEAPOLIS, MINNESOTA

TITLE: WIRE LISTING

WL | DOCUMENT NO. 72971100 | REV. A

SHEET 11 OF

CONDUCTOR IDENT.	FIND NO.	GAUGE (REF.)	COLOR (REF.)	LENGTH (APPROX.)	ORIGIN		ACCESS. FIND NO.	DESTINATION		ACCESS. FIND NO.	REMARKS
172	12	24	4		A4J205	75	20	B15	36	16,17	
173					B15	16	16,17	A4J205	76	20	
174					A4J205	77	20	B15	17	16,17	
175					B15	25	16,17	A4J205	78	20	
176					J206	B	20	A17	34	16,17	
177					A17	08	16,17	J206	D	20	
178					J206	C	20	TB203	3	34(34)	
179					TB203	1	32 (35)	J206	U	20	
180					J206	V	20	A19	1	16,17	
181					A19	20	16,17	J206	W	20	
182					J206	X	20	A19	33	16,17	
183					A19	45	16,17	J206	Y	20	
184					J206	P	20	A3TB204	3	22	
185					A4TB204	3	22	J206	$\bar{t}$	20	
186					J206	$\bar{h}$	20	B17	08	16,17	
187					B17	34	16,17	J206	$\bar{e}$	20	
188					J206	$\bar{f}$	20	TB203	4	34(36)	
189					TB203	2	34(37)	J206	$\bar{x}$	20	
190	12	24	4		J206	$\bar{y}$	20	B19	1	16,17	

CONTROL DATA
MINNEAPOLIS, MINNESOTA

TITLE: WIRE LISTING

WL | DOCUMENT NO. 72971100 | REV. A

SHEET 12 OF

CONDUCTOR IDENT.	FIND NO.	GAUGE (REF.)	COLOR (REF.)	LENGTH (APPROX.)	ORIGIN		ACCESS. FIND NO.	DESTINATION		ACCESS. FIND NO.	REMARKS
191	12	24	4		B19	20	16,17	J206	$\bar{z}$	20	
192					J206	AA	20	B19	33	16,17	
193					B19	45	16,17	J206	BB	20	
194					A3TB202	7	21,(41)	A3TB202	2	27	
195					A3TB202	5	21 (38)	A3TB202	1	27	
196					A3TB202	30	27	A3TB202	31	27	
197					A3TB202	24	27	A3TB202	25	27	
198					A3TB202	18	27	A3TB202	19	27	
199					A3TB202	12	27	A3TB202	13	27	
200					A3TB202	34	27	A3TB202	31	27	
201					A3TB202	28	27	A3TB202	25	27	
202					A3TB202	22	27	A3TB202	19	27	
203					A3TB202	16	27	A3TB202	14	27	
204					A3TB202	5	(38)	A3TB202	8	27	
205					A3TB202	7	(41)	A3TB202	10	27	
206					A4TB202	7	21,(41)	A4TB202	2	27	
207					A4TB202	5	21 (39)	A4TB202	1	27	
208					A4TB202	30	27	A4TB202	31	27	
209	12	24	4		A4TB202	24	27	A4TB202	25	27	

FORM AA1669

CONTROL DATA
MINNEAPOLIS, MINNESOTA

TITLE: WIRE LISTING

WL | DOCUMENT NO. 72971100 | REV. A

SHEET 13 OF

CONDUCTOR IDENT.	FIND NO.	GAUGE (REF.)	COLOR (REF.)	LENGTH (APPROX.)	ORIGIN		ACCESS. FIND NO.	DESTINATION		ACCESS. FIND NO.	REMARKS
210	12	24	4		A4TB202	18	27	A4TB202	19	27	
211					A4TB202	12	27	A4TB202	13	27	
212					A4TB202	34	27	A4TB202	31	27	
213					A4TB202	28	27	A4TB202	25	27	
214					A4TB202	22	27	A4TB202	19	27	
215					A4TB202	16	27	A4TB202	14	27	
216					A4TB202	5	(39)	A4TB202	8	27	
217					A4TB202	7	(49)	A4TB202	10	27	
218					TB203	1	(5)	A3TP200	—	22	
219					A3TP203	—	22	A11	46	16,17	
220					TB203	2	(6)	A4TP200	—	22	
221					A4TP203	—	22	B11	46	16,17	
222					A11	6	16,17	A3TP204	—	22	
223					A3TP202	—	22	A11	48	16,17	
224					B11	6	16,17	A4TP204	—	22	
225					A4TP202	—	22	B11	48	16,17	
226					TB203	13	15 (27)	IJ202	N	14	
227					IJ200	80	20	TB203	13	32 (40)	
228	12	24	4		TB203	13	(40)	IJ201	80	20	

CONTROL DATA
MINNEAPOLIS, MINNESOTA

TITLE: WIRE LISTING

WL | DOCUMENT NO. 72971100 | REV. A

SHEET 14 OF

CONDUCTOR IDENT.	FIND NO.	GAUGE (REF.)	COLOR (REF.)	LENGTH (APPROX.)	ORIGIN		ACCESS. FIND NO.	DESTINATION		ACCESS. FIND NO.	REMARKS
229	12	24	4		A30	2	16,17	TB203	13	32 (41)	
230					TB203	13	(41)	A30	50	16,17	
231					IIJ202	N	14	TB203	16	(28)	
232					TB203	16	32 (42)	IIJ200	80	20	
233					IIJ201	80	20	TB203	16	(42)	
234					TB203	16	32 (43)	B30	2	16,17	
235					B30	50	16,17	TB203	16	(43)	
236					TB203	1	(39)	A3TB204	7	22	
237					A3TB204	4	22	A14	45	16,17	
238					B14	45	16,17	A4TB204	4	22	
239					A4TB204	7	22	TB203	2	(37)	
240					A3TB202	36	27	A3TB202	37	27	
241					A4TB202	36	27	A4TB202	37	27	
242					A22	25	16,17	A3J205	40	20	
243					A3J205	41	20	A22	18	16,17	
244					B22	25	16,17	A4J205	40	20	
245					A4J205	41	20	B22	18	16,17	
246					A3J205	24	20	J206	A	20	
247	12	24	4		A4S202	3	22	B17	9	16,17	

FORM AA1669

CONTROL DATA
MINNEAPOLIS, MINNESOTA

TITLE: WIRE LISTING

WL | DOCUMENT NO. 72971100 | REV. A

SHEET 15 OF

CONDUCTOR IDENT.	FIND NO.	GAUGE (REF.)	COLOR (REF.)	LENGTH (APPROX.)	ORIGIN		ACCESS. FIND NO.	DESTINATION		ACCESS. FIND NO.	REMARKS
248	12	24	4		A3S202	2	22	A17	33	16,17	
249					A3S202	3		A17	9		
250					A3S202	4		A17	26		
251					A3S202	5		A17	5		
252					A4S202	C		B17	32		
253					A4S202	1		B17	44		
254	12	24	4		A4S202	2	22	B17	33	16,17	
255	10	16	4		A3J205	1	18	TB203	3	15	
256					TB203	7	15	A3J205	2	18	
257					A3J205	3	18	J204	21	9	
258					A3J205	20	18	TB203	1	34,50	
259					TB203	1	50	J204	1	9	
260					J204	2	9	TB203	1	34 52	
261					TB203	2	15	J204	3	9	
262					J204	11	9	TB203	6	15	
263					TB203	5	15	J204	12	9	
264					J204	13	9	TB203	9	15	
265					TB203	10	15	J204	14	9	
266	10	16	4		J204	17	9	A3TB202	35	21	

CONTROL DATA
MINNEAPOLIS, MINNESOTA

TITLE: WIRE LISTING

WL | DOCUMENT NO. 72971100 | REV. A

SHEET 16 OF

CONDUCTOR IDENT.	FIND NO.	GAUGE (REF.)	COLOR (REF.)	LENGTH (APPROX.)	ORIGIN		ACCESS. FIND NO.	DESTINATION		ACCESS. FIND NO.	REMARKS
267	10	16	4		TB203	3	34	J204	18	9	
268					J204	20	9	TB203	4	36	
269					TB203	7	15	J204	28	9	
270					J204	29	9	TB203	8	15	
271					A4J205	3	18	J204	30	9	
272					J204	35	9	A4TB202	35	21	
273					TB203	4	15	A4J205	1	18	
274					A4J205	20	18	TB203	2	37	
275					TB203	1	52	TOP BUSS BAR	—	23,24	
276					MIDDLE BUSS BAR	—	23,24	TB203	2	52 34	
277					TB203	2	52	BOTTOM BUSS BAR	—	23,24	
278	10	16	4		TB203	8	15	A4J205	2	18	
279	12	24	4		A3S201	1	16	A17	41	16,17	
280					A4S201	1	16	B17	41		
281					A3DS200	B	27	A17	42		
282					A4DS200	B	27	B17	42		
283					A3S202	C	22	A17	32		
284	12	24	4		A3S202	1	22	A17	44	16,17	

FORM AA 1669

CONTROL DATA
MINNEAPOLIS, MINNESOTA

TITLE: WIRE LISTING

WL | DOCUMENT NO. 72971100 | REV. A

SHEET 17 OF

CONDUCTOR IDENT.	FIND NO.	GAUGE (REF.)	COLOR (REF.)	LENGTH (APPROX.)	ORIGIN		ACCESS. FIND NO.	DESTINATION		ACCESS. FIND NO.	REMARKS
285	25	24									
285A			0		A3J205	4	20	A3TB202	35	(7)	
285B			4		A3J205	8	20	A3TB202	37	27	
286	25	24									
286A			0		A3TB202	9	27	A3J205	5	20	
286B			4		A3TB202	7	27	A3J205	10	20	
287	25	24									
287A			0		A3J205	7	20	A3TB202	15	27	
287B			4		A3J205	11	20	A3TB202	11	27	
288	25	24									
288A			0		A3TB202	21	27	A3J205	12	20	
288B			4		A3TB202	17	27	A3J205	15	20	
289	25	24									
289A			0		A3J205	13	20	A3TB202	27	27	
289B			4		A3J205	16	20	A3TB202	23	27	
290	25	24									
290A			0		A3TB202	33	27	A3J205	14	20	
290B			4		A3TB202	29	27	A3J205	17	20	

CONTROL DATA
MINNEAPOLIS, MINNESOTA

TITLE: WIRE LISTING

WL | DOCUMENT NO. 72971100 | REV. A

SHEET 18 OF

CONDUCTOR IDENT.	FIND NO.	GAUGE (REF.)	COLOR (REF.)	LENGTH (APPROX.)	ORIGIN		ACCESS. FIND NO.	DESTINATION		ACCESS. FIND NO.	REMARKS
291	25	24									
291A			0		A3J205	31	20	A11	25	16,17	
291B			4		A3J205	34	20	A11	24	16,17	
292	25	24									
292A			0		IJ202	K	14	A3J205	45	20	
292B			4		IJ202	M	14	A3J205	46	20	
293	25	24									
293A			0		A3J205	48	20	IIJ202	K	14	
293B			4		A3J205	49	20	IIJ202	M	14	
294	25	24									
294A			0		A4J205	4	20	A4TB202	35	(12)	
294B			4		A4J205	8	20	A4TB202	37	27	
295	25	24									
295A			0		A4TB202	9	27	A4J205	5	20	
295B			4		A4TB202	7	27	A4J205	10	20	
296	25	24									
296A			0		A4J205	7	20	A4TB202	15	27	
296B			4		A4J205	11	20	A4TB202	11	27	

FORM AA1669

CONTROL DATA
MINNEAPOLIS, MINNESOTA

TITLE: WIRE LISTING

WL | DOCUMENT NO. 72971100 | REV. A

SHEET 19 OF

CONDUCTOR IDENT.	FIND NO.	GAUGE (REF.)	COLOR (REF.)	LENGTH (APPROX.)	ORIGIN		ACCESS. FIND NO.	DESTINATION		ACCESS. FIND NO.	REMARKS
297	25	24									
297A			0		A4TB202	21	27	A4J205	12	20	
297B			4		A4TB202	17	27	A4J205	15	20	
298	25	24									
298A			0		A4J205	13	20	A4TB202	27	27	
298B			4		A4J205	16	20	A4TB202	23	27	
299	25	24									
299A			0		A4TB202	33	27	A4J205	14	20	
299B			4		A4TB202	29	27	A4J205	17	20	
300	25	24									
300A			0		A4J205	31	20	B11	25	16,17	
300B			4		A4J205	34	20	B11	24	16,17	
301	25	24									
301A			0		IJ202	KK	14	A4J205	45	20	
301B			4		IJ202	MM	14	A4J205	46	20	
302	25	24									
302A			0		A4J205	48	20	IIJ202	KK	14	
302B			4		A4J205	49	20	IIJ202	MM	14	

CONTROL DATA
MINNEAPOLIS, MINNESOTA

TITLE: WIRE LISTING

WL | DOCUMENT NO. 72971100 | REV. A

SHEET 20 OF

CONDUCTOR IDENT.	FIND NO.	GAUGE (REF.)	COLOR (REF.)	LENGTH (APPROX.)	ORIGIN		ACCESS. FIND NO.	DESTINATION		ACCESS. FIND NO.	REMARKS
303	25	24									
303A			0		A7	1	16,17	A3TB202	20	27	
303B			4		A7	5	16,17	A3TB202	18	27	
304	25	24									
304A			0		A3TB202	14	27	A7	18	16,17	
304B			4		A3TB202	12	27	A7	17	16,17	
305	25	24									
305A			0		A7	28	16,17	A3TB202	32	27	
305B			4		A7	29	16,17	A3TB202	30	27	
306	25	24									
306A			0		A3TB202	26	27	A7	44	16,17	
306B			4		A3TB202	24	27	A7	45	16,17	
307	25	24									
307A			0		B7	1	16,17	A4TB202	20	27	
307B			4		B7	5	16,17	A4TB202	18	27	
308	25	24									
308A			0		A4TB202	14	27	B7	18	16,17	
308B			4		A4TB202	12	27	B7	17	16,17	

M AA 1669

CONTROL DATA
MINNEAPOLIS, MINNESOTA

TITLE: WIRE LISTING

WL | DOCUMENT NO. 72971100 | REV. A

SHEET 21 OF

CONDUCTOR IDENT.	FIND NO.	GAUGE (REF.)	COLOR (REF.)	LENGTH (APPROX)	ORIGIN		ACCESS. FIND NO.	DESTINATION		ACCESS. FIND NO.	REMARKS
309	25	24									
309A			0		B7	28	16,17	A4TB202	32	27	
309B			4		B7	29	16,17	A4TB202	30	27	
310	25	24									
310A			0		A4TB202	26	27	B7	44	16,17	
310B			4		A4TB202	24	27	B7	45	16,17	
311	12	24	4		A4S202	4	22	B17	26	16,17	
312	12	24	4		J206	b	20	A18	42	16,17	
313	12	24	4		J206	EE	20	B18	42	16,17	
315	28	20									
315A			SHIELD		A3J205	29	19	A11	28	29,31	
315B			0		A3J205	30	19	A11	26	29,30	
315C			2		A3J205	33	19	A11	18	29,30	
316	28	20									
316A			SHIELD		A4J205	29	19	B11	28	29,31	
316B			0		A4J205	30	19	B11	26	29,30	
316C			2		A4J205	33	19	B11	18	29,30	

CONTROL DATA
MINNEAPOLIS, MINNESOTA

TITLE: WIRE LISTING

WL | DOCUMENT NO. 72971100 | REV. A

SHEET 22 OF 23

CONDUCTOR IDENT.	FIND NO.	GAUGE (REF.)	COLOR (REF.)	LENGTH (APPROX)	ORIGIN		ACCESS. FIND NO.	DESTINATION		ACCESS. FIND NO.	REMARKS
320	33	24									
320A			SHIELD		A3J205	79	36,37 19 44	A22	10	36,37 16,17	
320B			9		A3J205	80	12,20	A22	5	12 16,17	
321	33	24									
321A			SHIELD		A22	8	36,37 16,17	A3J205	79	36,37 44	
321B			9		A22	9	12 16,17	A3J205	82	20,12	
322	33	24									
322A			SHIELD		A4J205	79	36,37 19 43	B22	10	36,37 16,17	
322B			9		A4J205	80	12,20	B22	5	12 16,17	
323	33	24									
323A			SHIELD		B22	8	36,37 16,17	A4J205	79	36,37 45	
323B			9		B22	9	12 16,17	A4J205	82	20,12	
324	11	20	4		A29	48	29,30	TB203	9	32	
325	11	20	4		TB203	10	32	B29	48	29,30	
326	12	24	4		A3J205	42	20	TB203	2	47	
327	↕	↕	↕		A4J205	42	↕	TB203	2	47 35	
328					A3J205	43		J206	a	20	
329					A4J205	43	20	J206	DD	20	
330	12	24	4		A4S202	05	22	B17	5	16,17	

FORM AA1669

CONTROL DATA | NORMANDALE OPERATIONS | CODE IDENT 19333 | SHEET 23 OF 23 | WL | DOCUMENT NO. 72971100 | REV. N

CONDUCTOR IDENT.	FIND NO.	GAUGE (REF.)	COLOR (REF.)	LENGTH (APPROX)	ORIGIN		ACCESS FIND NO	DESTINATION		ACCESS FIND NO	REMARKS
331	12	24	4		A3TB202	39	21 (53)	A3S200	A1	22	
332	↑	↑	↑		A3TB202	39	(53)	A18	28	16,17	
333					A3TB202	38	27	A25	26	16,17	
334					A3TB202	40	27	B25	26	16,17	
335					A4TB202	39	21 (54)	A4S200	A1	22	
336					A4TB202	39	(54)	B18	28	16,17	
337					A4TB202	38	27	A25	34	16,17	
338	12	24	4		A4TB202	40	27	B25	34	16,17	
339											
340	7 (4)	20	4	7	TB205	1	5 (4)	TB203	10	8 (4)	
341	↑	↑	↑	7	↑	2	↑	↑	9	↑	
342				7		3			8		
343				7		4			7		
344				9		5			6		
345				9		6			5		
346				9		7			4		
347				9		8			3		
348	↓	↓	↓	12	↓	9	↓	↓	2	↓	
349	7 (4)	20	4	12	TB205	10	5 (4)	TB203	1	8 (4)	

CONTROL DATA | WIRING (Corrections) | CODE IDENT | SHEET | WL | DOCUMENT NO. | REV.

CONDUCTOR IDENT	FIND NO	GAUGE (REF.)	COLOR (REF.)	LENGTH (APPROX)	ORIGIN		ACCESS FIND NO	DESTINATION		ACCESS FIND NO	REMARKS

AA3183

DWN	J. McMillan	4-10-72	CONTROL DATA	TITLE	PREFIX	DOCUMENT NO.	CD
CHKD	DAS	4-11-72		WIRE LIST LOGIC CHASSIS HARNESS ASSY	WL	73569000	0
ENG	E.L. DAVIS	4-11-72	NORMANDALE DIVISION				
MFG				FIRST USED ON		SHEET 1 OF 24	
APPR			CODE IDENT 19333	MULTIPLE DISK DRIVE			

REVISION RECORD

REV	ECO	DESCRIPTION	DRFT	DATE	APP	REV	ECO	DESCRIPTION	DRFT	DATE	APP
A	PE24042 PE23000	DWG SIMILAR TO AND CREATED BY USING MASTER FROM 7297l100	JPM		IR						

NOTES:

DN 73569000
DETACHED LISTS

CONTROL DATA	TITLE		DOCUMENT NO.	CD	REV.
MINNEAPOLIS, MINNESOTA	WIRE LISTING	WL	73569000	0	A
		SHEET 2 OF			

CONDUCTOR IDENT.	FIND NO.	GAUGE (REF.)	COLOR (REF.)	LENGTH (APPROX.)	ORIGIN		ACCESS. FIND NO.	DESTINATION		ACCESS. FIND NO.	REMARKS
1	11	20	4		J204	42	13	J206	M	19	
2					J206	N	19	J204	43	13	
3					J204	45	13	J206	R	19	
4					J206	S	19	J204	46	13	
5					J204	48	9 (1)	IJ202	U	13	
6					□J202	U	13	J204	48	(1)	
7					J204	51	13	J206	$\overline{J}$	19	
8					J206	$\overline{k}$	19	J204	52	13	
9					J204	53	13	J206	HH	19	
10					J206	$\overline{m}$	19	J204	54	13	
11					J204	55	13	J206	$\overline{n}$	19	
12					J206	$\overline{p}$	19	J204	56	13	
13					J204	57	13	J206	$\overline{r}$	19	
14					J206	$\overline{s}$	19	J204	58	13	
15					J204	60	13	J206	$\overline{u}$	19	
16					J206	$\overline{v}$	19	J204	62	13	
17					J204	64	9 (2)	IJ202	X	13	
18					□J202	X	13	J204	64	(2)	
19	11	20	4		J204	65	9 (3)	IJ202	Y	13	

CONTROL DATA
MINNEAPOLIS, MINNESOTA

TITLE: WIRE LISTING

WL | DOCUMENT NO. 73569000 | CD 0 | REV. A

SHEET 3 OF

CONDUCTOR IDENT.	FIND NO.	GAUGE (REF.)	COLOR (REF.)	LENGTH (APPROX.)	ORIGIN		ACCESS. FIND NO.	DESTINATION		ACCESS. FIND NO.	REMARKS
20	11	20	4		IJ202	Y	13	J204	65	(3)	
21					J204	66	9 (4)	IJ202	Z	13	
22					IJ202	Z	13	J204	66	(4)	
23					J204	16	13	A4J205	21	19	
24					A3J205	18	19	J204	24	13	
25					J204	26	13	A3J205	21	19	
26					A4J205	18	19	J204	33	13	
27					J204	36	13	J206	E	19	
28					J206	F	19	J204	37	13	
29					J204	39	13	J206	J	19	
30					J206	K	19	J204	40	13	
31					J204	41	13	J206	L	19	
32					J206	T	19	A3J205	25	19	
33					A3J205	32	19	TB203	1	32 (5)	
34					TB203	3	32	A3J205	35	19	
35					A3J205	36	19	TB203	7	15 (46)	
36					TB203	8	32	A4J205	36	19	
37					A4J205	35	19	TB203	4	32	
38	11	20	4		TB203	2	32 (6)	A4J205	32	19	

CONTROL DATA
MINNEAPOLIS, MINNESOTA

TITLE: WIRE LISTING

WL | DOCUMENT NO. 73569000 | CD 0 | REV. A

SHEET 4 OF

CONDUCTOR IDENT.	FIND NO.	GAUGE (REF.)	COLOR (REF.)	LENGTH (APPROX.)	ORIGIN		ACCESS. FIND NO.	DESTINATION		ACCESS. FIND NO.	REMARKS
39	11	20	4		A4J205	25	19	J206	W	19	
40					A3TB202	35	21 (7)	A3TB202	33	21 (8)	
41					A3TB202	33	(8)	A3TB202	27	21 (9)	
42					A3TB202	27	(9)	A3TB202	21	21 (10)	
43					A3TB202	21	(10)	A3TB202	15	21 (11)	
44					A3TB202	15	(11)	A3TB202	9	27	
45					A4TB202	35	21 (12)	A4TB202	33	21 (13)	
46					A4TB202	33	(13)	A4TB202	27	21 (14)	
47					A4TB202	27	(14)	A4TB202	21	21 (15)	
48					A4TB202	21	(15)	A4TB202	15	21 (16)	
49					A4TB202	15	(16)	A4TB202	9	27	
50					TB203	3	15 (17)	A23	46	29,30	
51					A17	46	29,30	TB203	3	(17)	
52					TB203	3	15 (18)	A10	46	29,30	
53					B23	46	29,30	TB203	4	15 (19)	
54					TB203	4	(19)	B17	46	29,30	
55					B10	46	29,30	TB203	4	15 (51)	
56					TB203	5	32	A29	46	29,30	
57	11	20	4		B29	46	29,30	TB203	5	32	

CONTROL DATA
MINNEAPOLIS, MINNESOTA

TITLE
WIRE LISTING

WL | DOCUMENT NO. 73569000 | CD 0 | REV. A
SHEET 5 OF

CONDUCTOR IDENT.	FIND NO.	GAUGE (REF.)	COLOR (REF.)	LENGTH (APPROX.)	ORIGIN		ACCESS. FIND NO.	DESTINATION		ACCESS. FIND NO.	REMARKS
58	11	20	4		TB203	5	32	A26	46	29,30	
59					B26	46	29,30	TB203	5	32	
60					TB203	6	32	A29	6	29,30	
61					B29	6	29,30	TB203	6	32	
62					TB203	6	32	A26	6	29,30	
63					B26	6	29,30	TB203	6	32	
64					TB203	7	15 (20)	A23	6	29,30	
65					A17	6	29,30	TB203	7	15 (21)	
66					TB203	7	(21)	A10	6	29,30	
67					B23	6	29,30	TB203	8	34 (22)	
68					TB203	8	15,(49)	B17	6	29,30	
69					B10	6	29,30	TB203	8	(49)	
70					TB203	9	15 (23)	A23	48	29,30	
71					A17	48	29,30	TB203	9	32	
72					TB203	9	15 (24)	A10	48	29,30	
73					B23	48	29,30	TB203	10	15 (25)	
74					TB203	10	15 (26)	B17	48	29,30	
75					B10	48	29,30	TB203	10	32	
76	11	20	4		TB203	13	15 (27)	IJ202	R	13	

CONTROL DATA
MINNEAPOLIS, MINNESOTA

TITLE
WIRE LISTING

WL | DOCUMENT NO. 73569000 | CD | REV. A
SHEET 6 OF

CONDUCTOR IDENT.	FIND NO.	GAUGE (REF.)	COLOR (REF.)	LENGTH (APPROX.)	ORIGIN		ACCESS. FIND NO.	DESTINATION		ACCESS. FIND NO.	REMARKS
77	11	20	4		IIJ202	R	13	TB203	16	15 (28)	
78					A3TB202	36	27	A3TB202	6	21 (29)	
79					A3TB202	6	(29)	TB203	1	15 (30)	
80					TB203	1	(30)	A4TB202	6	21 (31)	
81					A4TB202	6	(31)	A4TB202	36	27	
82					TB203	4	(51)	B05	46	29,30	
83					B05	48	29,30	TB203	10	(28)	
84					TB203	3	18	A05	46	29,30	
85					A05	48	29,30	TB203	9	(24)	
86					A05	6	29,30	TB203	7	(16)	
87					TB203	8	(22)	B05	6	29,30	
88					A26	48	29,30	TB203	9	(23)	
89	11	20	4		TB203	10	(25)	B26	48	29,30	
90	12	24	4		A3TB204	1	22	J204	44	14	
91					J204	49	13 (32)	IJ202	V	14	
92					IIJ202	V	14	J204	49	(32)	
93					J204	50	13 (33)	IJ202	W	14	
94					IIJ202	W	14	J204	50	(33)	
95	12	24	4		J204	59	14	A4TB204	1	22	

CONTROL DATA
MINNEAPOLIS, MINNESOTA

TITLE

WIRE LISTING

WL | DOCUMENT NO. 73569000 | CO 0 | REV. A

SHEET 7 OF

CONDUCTOR IDENT.	FIND NO.	GAUGE (REF.)	COLOR (REF.)	LENGTH (APPROX.)	ORIGIN		ACCESS. FIND NO.	DESTINATION		ACCESS. FIND NO.	REMARKS
96	12	24	4		A3TP201	–	22	J204	67	14	
97					J204	70	14	A4TP201	–	22	
98					A3J205	39	20	A8	1	23,24	
99					A7	13	23,24	A3J205	23	20	
100					J204	4	14	B7	37	16,17	
101					B8	45	16,17	J204	5	14	
102					J204	7	14	A8	45	16,17	
103					A7	37	16,17	J204	8	14	
104					J204	10	14	J206	Z	20	
105					J206	CC	20	J204	22	14	
106					J204	15	14	A4J205	22	20	
107					J206	H	20	J204	25	14	
108					J204	27	14	A3J205	22	20	
109					A3J205	26	20	A8	2	16,17	
110					A8	1	16,17	A3J205	27	20	
111					A3J205	28	20	A3TB204	2	22	
112					A11	30	16,17	A3J205	37	20	
113					A3J205	38	20	A11	45	16,17	
114	12	24	4		A14	1	16,17	A3J205	47	20	

CONTROL DATA
MINNEAPOLIS, MINNESOTA

TITLE

WIRE LISTING

WL | DOCUMENT NO. 73569000 | CO 0 | REV. A

SHEET 8 OF

CONDUCTOR IDENT.	FIND NO.	GAUGE (REF.)	COLOR (REF.)	LENGTH (APPROX.)	ORIGIN		ACCESS. FIND NO.	DESTINATION		ACCESS. FIND NO.	REMARKS
115	12	24	4		A3J205	50	20	A14	8	16,17	
116					A17	16	16,17	A3J205	51	20	
117					A3J205	52	20	A14	20	16,17	
118					A14	42	16,17	A3J205	53	20	
119					A3J205	54	20	A14	37	16,17	
120					A14	36	16,17	A3J205	55	20	
121					A3J205	56	20	A15	42	16,17	
122					A15	45	16,17	A3J205	57	20	
123					A3J205	58	20	A15	9	16,17	
124					A15	29	16,17	A3J205	59	20	
125					A3J205	60	20	A15	24	16,17	
126					A15	13	16,17	A3J205	62	20	
127					A3J205	63	20	A15	22	16,17	
128					A15	40	16,17	A3J205	64	20	
129					A3J205	65	20	A15	33	16,17	
130					A15	14	16,17	A3J205	66	20	
131					A3J205	67	20	A15	28	16,17	
132					A15	34	16,17	A3J205	70	20	
133	12	24	4		A3J205	71	20	A15	12	16,17	

CONTROL DATA
MINNEAPOLIS, MINNESOTA

TITLE: WIRE LISTING

WL | DOCUMENT NO. 73569000 | CD 0 | REV. A

SHEET 9 OF

CONDUCTOR IDENT.	FIND NO.	GAUGE (REF.)	COLOR (REF.)	LENGTH (APPROX.)	ORIGIN		ACCESS. FIND NO.	DESTINATION		ACCESS. FIND NO.	REMARKS
134	12	24	4		A15	21	16,17	A3J205	72	20	
135					A3J205	73	20	A15	20	16,17	
136					A15	38	16,17	A3J205	74	20	
137					A3J205	75	20	A15	36	16,17	
138					A15	16	16,17	A3J205	76	20	
139					A3J205	77	20	A15	17	16,17	
140					A15	25	16,17	A3J205	78	20	
141					A4J205	39	20	B8	1	16,17	
142					B7	13	16,17	A4J205	23	20	
143					A4J205	24	20	J206	$\overline{d}$	20	
144					A4J205	26	20	B8	2	16,17	
145					B8	1	16,17	A4J205	27	20	
146					A4J205	28	20	A4TB204	2	22	
147					B11	30	16,17	A4J205	37	20	
148					A4J205	38	20	B11	45	16,17	
149					B14	1	16,17	A4J205	47	20	
150					A4J205	50	20	B14	8	16,17	
151					B17	16	16,17	A4J205	51	20	
152	12	24	4		A4J205	52	20	B14	20	16,17	

CONTROL DATA
MINNEAPOLIS, MINNESOTA

TITLE: WIRE LISTING

WL | DOCUMENT NO. 73569000 | CD 0 | REV. A

SHEET 10 OF

CONDUCTOR IDENT.	FIND NO.	GAUGE (REF.)	COLOR (REF.)	LENGTH (APPROX.)	ORIGIN		ACCESS. FIND NO.	DESTINATION		ACCESS. FIND NO.	REMARKS
153	12	24	4		B14	42	16,17	A4J205	53	20	
154					A4J205	54	20	B14	37	16,17	
155					B14	36	16,17	A4J205	55	20	
156					A4J205	56	20	B15	42	16,17	
157					B15	45	16,17	A4J205	57	20	
158					A4J205	58	20	B15	9	16,17	
159					B15	29	16,17	A4J205	59	20	
160					A4J205	60	20	B15	24	16,17	
161					B15	13	16,17	A4J205	62	20	
162					A4J205	63	20	B15	22	16,17	
163					B15	40	16,17	A4J205	64	20	
164					A4J205	65	20	B15	33	16,17	
165					B15	14	16,17	A4J205	66	20	
166					A4J205	67	20	B15	28	16,17	
167					B15	34	16,17	A4J205	70	20	
168					A4J205	71	20	B15	12	16,17	
169					B15	21	16,17	A4J205	72	20	
170					A4J205	73	20	B15	20	16,17	
171	12	24	4		B15	38	16,17	A4J205	74	20	

CONTROL DATA
MINNEAPOLIS, MINNESOTA

TITLE
WIRE LISTING

WL | DOCUMENT NO. 73569000 | CD 0 | REV. A
SHEET 11 OF

CONDUCTOR IDENT.	FIND NO.	GAUGE (REF.)	COLOR (REF.)	LENGTH (APPROX.)	ORIGIN		ACCESS. FIND NO.	DESTINATION		ACCESS. FIND NO.	REMARKS
172	12	24	4		A4J205	75	20	B15	36	16,17	
173					B15	16	16,17	A4J205	76	20	
174					A4J205	77	20	B15	17	16,17	
175					B15	25	16,17	A4J205	78	20	
176					J206	B	20	A17	34	16,17	
177					A17	08	16,17	J206	D	20	
178					J206	C	20	TB203	3	34 (34)	
179					TB203	1	32 (35)	J206	U	20	
180					J206	V	20	A19	1	16,17	
181					A19	20	16,17	J206	W	20	
182					J206	X	20	A19	33	16,17	
183					A19	45	16,17	J206	Y	20	
184					J206	P	20	A3TB204	3	22	
185					A4TB204	3	22	J206	$\overline{t}$	20	
186					J206	$\overline{h}$	20	B17	08	16,17	
187					B17	34	16,17	J206	$\overline{e}$	20	
188					J206	$\overline{f}$	20	TB203	4	34 (36)	
189					TB203	2	34 (37)	J206	$\overline{x}$	20	
190	12	24	4		J206	$\overline{y}$	20	B19	1	16,17	

CONTROL DATA
MINNEAPOLIS, MINNESOTA

TITLE
WIRE LISTING

WL | DOCUMENT NO. 73569000 | CD 0 | REV. A
SHEET 12 OF

CONDUCTOR IDENT.	FIND NO.	GAUGE (REF.)	COLOR (REF.)	LENGTH (APPROX.)	ORIGIN		ACCESS. FIND NO.	DESTINATION		ACCESS. FIND NO.	REMARKS
191	12	24	4		B19	20	16,17	J206	$\overline{z}$	20	
192					J206	AA	20	B19	33	16,17	
193					B19	45	16,17	J206	BB	20	
194					A3TB202	7	21,48	A3TB202	2	27	
195					A3TB202	5	21 (38)	A3TB202	1	27	
196					A3TB202	30	27	A3TB202	31	27	
197					A3TB202	24	27	A3TB202	25	27	
198					A3TB202	18	27	A3TB202	19	27	
199					A3TB202	12	27	A3TB202	13	27	
200					A3TB202	34	27	A3TB202	31	27	
201					A3TB202	28	27	A3TB202	25	27	
202					A3TB202	22	27	A3TB202	19	27	
203					A3TB202	16	27	A3TB202	14	27	
204					A3TB202	5	(38)	A3TB202	8	27	
205					A3TB202	7	(48)	A3TB202	10	27	
206					A4TB202	7	21,49	A4TB202	2	27	
207					A4TB202	5	21 (39)	A4TB202	1	27	
208					A4TB202	30	27	A4TB202	31	27	
209	12	24	4		A4TB202	24	27	A4TB202	25	27	

CONTROL DATA
MINNEAPOLIS, MINNESOTA

TITLE
WIRE LISTING

WL | DOCUMENT NO. 73569000 | CD 0 | REV. A
SHEET 13 OF

CONDUCTOR IDENT.	FIND NO.	GAUGE (REF.)	COLOR (REF.)	LENGTH (APPROX.)	ORIGIN		ACCESS. FIND NO.	DESTINATION		ACCESS. FIND NO.	REMARKS
210	12	24	4		A4TB202	18	27	A4TB202	19	27	
211					A4TB202	12	27	A4TB202	13	27	
212					A4TB202	34	27	A4TB202	31	27	
213					A4TB202	28	27	A4TB202	25	27	
214					A4TB202	22	27	A4TB202	19	27	
215					A4TB202	16	27	A4TB202	14	27	
216					A4TB202	5	(39)	A4TB202	8	27	
217					A4TB202	7	(49)	A4TB202	10	27	
218					TB203	1	(5)	A3TP200	—	22	
219					A3TP203	—	22	All	46	16,17	
220					TB203	2	(6)	A4TP200	—	22	
221					A4TP203	—	22	B11	46	16,17	
222					All	6	16,17	A3TP204	—	22	
223					A3TP202	—	22	All	48	16,17	
224					B11	6	16,17	A4TP204	—	22	
225					A4TP202	—	22	B11	48	16,17	
226					TB203	13	15 (27)	IJ202	N	14	
227					IJ200	80	20	TB203	13	32 (40)	
228	12	24	4		TB203	13	(40)	IJ201	80	20	

CONTROL DATA
MINNEAPOLIS, MINNESOTA

TITLE
WIRE LISTING

WL | DOCUMENT NO. 73569000 | CD 0 | REV. A
SHEET 14 OF

CONDUCTOR IDENT.	FIND NO.	GAUGE (REF.)	COLOR (REF.)	LENGTH (APPROX.)	ORIGIN		ACCESS. FIND NO.	DESTINATION		ACCESS. FIND NO.	REMARKS
229	12	24	4		A30	2	16,17	TB203	13	32 (41)	
230					TB203	13	(41)	A30	50	16,17	
231					IIJ202	N	14	TB203	16	(28)	
232					TB203	16	32 (42)	IIJ200	80	20	
233					IIJ201	80	20	TB203	16	(42)	
234					TB203	16	32 (43)	B30	2	16,17	
235					B30	50	16,17	TB203	16	(43)	
236					TB203	1	(39)	A3TB204	7	22	
237					A3TB204	4	22	A14	45	16,17	
238					B14	45	16,17	A4TB204	4	22	
239					A4TB204	7	22	TB203	2	(37)	
240					A3TB202	36	27	A3TB202	37	27	
241					A4TB202	36	27	A4TB202	37	27	
242					A22	25	16,17	A3J205	40	20	
243					A3J205	41	20	A22	18	16,17	
244					B22	25	16,17	A4J205	40	20	
245					A4J205	41	20	B22	18	16,17	
246					A3J205	24	20	J206	A	20	
247	12	24	4		A4S202	3	22	B17	9	16,17	

CONTROL DATA
MINNEAPOLIS, MINNESOTA

TITLE

WIRE LISTING

WL | DOCUMENT NO. 73569000 | CD 0 | REV. A

SHEET 15 OF

CONDUCTOR IDENT.	FIND NO.	GAUGE (REF.)	COLOR (REF.)	LENGTH (APPROX.)	ORIGIN		ACCESS. FIND NO.	DESTINATION		ACCESS. FIND NO.	REMARKS
248	12	24	4		A3S202	2	22	A17	33	16,17	
249					A3S202	3		A17	9		
250					A3S202	4		A17	26		
251					A3S202	5		A17	5		
252					A4S202	C		B17	32		
253					A4S202	1		B17	44		
254	12	24	4		A4S202	2	22	B17	33	16,17	
255	10	16	4		A3J205	1	18	TB203	3	15	
256					TB203	7	15	A3J205	2	18	
257					A3J205	3	18	J204	21	9	
258					A3J205	20	18	TB203	1	34,50	
259					TB203	1	50	J204	1	9	
260					J204	2	9	TB203	1	34,52	
261					TB203	2	15	J204	3	9	
262					J204	11	9	TB203	6	15	
263					TB203	5	15	J204	12	9	
264					J204	13	9	TB203	9	15	
265					TB203	10	15	J204	14	9	
266	10	16	4		J204	17	9	A3TB202	35	21	

CONTROL DATA
MINNEAPOLIS, MINNESOTA

TITLE

WIRE LISTING

WL | DOCUMENT NO. 73569000 | CD 0 | REV. A

SHEET 16 OF

CONDUCTOR IDENT.	FIND NO.	GAUGE (REF.)	COLOR (REF.)	LENGTH (APPROX.)	ORIGIN		ACCESS. FIND NO.	DESTINATION		ACCESS. FIND NO.	REMARKS
267	10	16	4		TB203	3	3	J204	18	9	
268					J204	20	9	TB203	4	36	
269					TB203	7	15	J204	28	9	
270					J204	29	9	TB203	8	15	
271					A4J205	3	18	J204	30	9	
272					J204	35	9	A4TB202	35	21	
273					TB203	4	15	A4J205	1	18	
274					A4J205	20	18	TB203	2	37	
275					TB203	1	52	TOP BUSS BAR	—	23,24	
276					MIDDLE BUSS BAR	—	23,24	TB203	2	52 34	
277					TB203	2	52	BOTTOM BUSS BAR	—	23,24	
278	10	16	4		TB203	8	15	A4J205	2	18	
279	12	24	4		A3S201	1	16	A17	41	16,17	
280					A4S201	1	16	B17	41		
281					A3DS200	B	27	A17	42		
282					A4DS200	B	27	B17	42		
283					A3S202	C	22	A17	32		
284	12	24	4		A3S202	1	22	A17	44	16,17	

CONTROL DATA
MINNEAPOLIS, MINNESOTA

TITLE: WIRE LISTING

WL | DOCUMENT NO. 73569000 | CD 0 | REV. A

SHEET 17 OF

CONDUCTOR IDENT.	FIND NO.	GAUGE (REF.)	COLOR (REF.)	LENGTH (APPROX.)	ORIGIN		ACCESS. FIND NO.	DESTINATION		ACCESS. FIND NO.	REMARKS
285	25	24									
285A			0		A3J205	4	20	A3TB202	35	⟨7⟩	
285B			4		A3J205	8	20	A3TB202	37	27	
286	25	24									
286A			0		A3TB202	9	27	A3J205	5	20	
286B			4		A3TB202	7	27	A3J205	10	20	
287	25	24									
287A			0		A3J205	7	20	A3TB202	15	27	
287B			4		A3J205	11	20	A3TB202	11	27	
288	25	24									
288A			0		A3TB202	21	27	A3J205	12	20	
288B			4		A3TB202	17	27	A3J205	15	20	
289	25	24									
289A			0		A3J205	13	20	A3TB202	27	27	
289B			4		A3J205	16	20	A3TB202	23	27	
290	25	24									
290A			0		A3TB202	33	27	A3J205	14	20	
290B			4		A3TB202	29	27	A3J205	17	20	

CONTROL DATA | NORMANDALE DIVISION | CODE IDENT 19333 | SHEET 18 | WL | DOCUMENT NO. 73569000 | CD 0 | REV. A

CONDUCTOR IDENT.	FIND NO.	GAUGE (REF.)	COLOR (REF.)	LENGTH (APPROX)	ORIGIN		ACCESS FIND NO.	DESTINATION		ACCESS FIND NO.	REMARKS
291	25	24									
291A			0		A3J205	31	20	A11	25	16,17	
291B			4		A3J205	34	20	A11	24	16,17	
292	25	24									
292A			0		B01	37	29,30	A3J205	45	20	
292B			4		B01	38	29,30	A3J205	46	20	
293	25	24									
293A			0		A3J205	48	20	IIJ202	K	14	
293B			4		A3J205	49	20	IIJ202	M	14	
294	25	24									
294A			0		A4J205	4	20	A4TB202	35	⟨12⟩	
294B			4		A4J205	8	20	A4TB202	37	27	
295	25	24									
295A			0		A4TB202	9	27	A4J205	5	20	
295B			4		A4TB202	7	27	A4J205	10	20	
296	25	24									
296A			0		A4J205	7	20	A4TB202	15	27	
296B			4		A4J205	11	20	A4TB202	11	27	

CONTROL DATA	NORMANDALE DIVISION	CODE IDENT 19333	SHEET 19	WL	DOCUMENT NO. 73569000	CD 0	REV. A

CONDUCTOR IDENT.	FIND NO.	GAUGE (REF.)	COLOR (REF.)	LENGTH (APPROX)	ORIGIN		ACCESS FIND NO.	DESTINATION		ACCESS FIND NO.	REMARKS
297	25	24									
297A			0		A4TB202	21	27	A4J205	12	20	
297B			4		A4TB202	17	27	A4J205	15	20	
298	25	24									
298A			0		A4J205	13	20	A4TB202	27	27	
298B			4		A4J205	16	20	A4TB202	23	27	
299	25	24									
299A			0		A4TB202	33	27	A4J205	14	20	
299B			4		A4TB202	29	27	A4J205	17	20	
300	25	24									
300A			0		A4J205	31	20	B11	25	16,17	
300B			4		A4J205	34	20	B11	24	16,17	
301	25	24									
301A			0		A01	37	29,30	A4J205	45	20	
301B			4		A01	38	29,30	A4J205	46	20	
302	25	24									
302A			0		A4J205	48	20	IIJ202	KK	14	
302B			4		A4J205	49	20	IIJ202	MM	14	

CONTROL DATA	TITLE	WL	DOCUMENT NO.	CD	REV.
MINNEAPOLIS, MINNESOTA	WIRE LISTING		73569000	0	A
		SHEET 20 OF			

CONDUCTOR IDENT.	FIND NO.	GAUGE (REF.)	COLOR (REF.)	LENGTH (APPROX)	ORIGIN		ACCESS. FIND NO.	DESTINATION		ACCESS. FIND NO.	REMARKS
303	25	24									
303A			0		A7	1	16,17	A3TB202	20	27	
303B			4		A7	5	16,17	A3TB202	18	27	
304	25	24									
304A			0		A3TB202	14	27	A7	18	16,17	
304B			4		A3TB202	12	27	A7	17	16,17	
305	25	24									
305A			0		A7	28	16,17	A3TB202	32	27	
305B			4		A7	29	16,17	A3TB202	30	27	
306	25	24									
306A			0		A3TB202	26	27	A7	44	16,17	
306B			4		A3TB202	24	27	A7	45	16,17	
307	25	24									
307A			0		B7	1	16,17	A4TB202	20	27	
307B			4		B7	5	16,17	A4TB202	18	27	
308	25	24									
308A			0		A4TB202	14	27	B7	18	16,17	
308B			4		A4TB202	12	27	B7	17	16,17	

CONTROL DATA
MINNEAPOLIS, MINNESOTA

TITLE
WIRE LISTING

WL | DOCUMENT NO. 73569000 | CD 0 | REV. A
SHEET 21 OF

CONDUCTOR IDENT.	FIND NO.	GAUGE (REF.)	COLOR (REF.)	LENGTH (APPROX.)	ORIGIN		ACCESS. FIND NO.	DESTINATION		ACCESS. FIND NO.	REMARKS
309	25	24									
309A			0		B7	28	16,17	A4TB202	32	27	
309B			4		B7	29	16,17	A4TB202	30	27	
310	25	24									
310A			0		A4TB202	26	27	B7	44	16,17	
310B			4		A4TB202	24	27	B7	45	16,17	
311	12	24	4		A4S202	4	22	B17	26	16,17	
312	12	24	4		J206	$\overline{b}$	20	A18	42	16,17	
313	12	24	4		J206	EE	20	B18	42	16,17	
315	28	20									
315A			SHIELD		A3J205	29	19	A11	28	29,31	
315B			0		A3J205	30	19	A11	26	29,30	
315C			2		A3J205	33	19	A11	18	29,30	
316	28	20									
316A			SHIELD		A4J205	29	19	B11	28	29,31	
316B			0		A4J205	30	19	B11	26	29,30	
316C			2		A4J205	33	19	B11	18	29,30	

CONTROL DATA
MINNEAPOLIS, MINNESOTA

TITLE
WIRE LISTING

WL | DOCUMENT NO. 73569000 | CD 0 | REV. A
SHEET 22

CONDUCTOR IDENT.	FIND NO.	GAUGE (REF.)	COLOR (REF.)	LENGTH (APPROX.)	ORIGIN		ACCESS. FIND NO.	DESTINATION		ACCESS. FIND NO.	REMARKS
320	33	24									
320A			SHIELD		A3J205	79	36,37 19 44	A22	10	36,37 16,17	
320B			9		A3J205	80	12,20	A22	5	12 16,17	
321	33	24									
321A			SHIELD		A22	8	36,37 16,17	A3J205	79	36 44 37	
321B			9		A22	9	12 16,17	A3J205	82	20,12	
322	33	24									
322A			SHIELD		A4J205	79	36,37 19 45	B22	10	36,32 16,17	
322B			9		A4J205	80	12,20	B22	5	12 16,17	
323	33	24									
323A			SHIELD		B22	8	36,37 16,17	A4J205	79	36 45 37	
323B			9		B22	9	12 16,17	A4J205	82	20,12	
324	11	20	4		A29	48	29,30	TB203	9	32	
325	11	20	4		TB203	10	32	B29	48	29,30	
326	12	24	4		A3J205	42	20	TB203	2	47	
327	↕	↕	↕		A4J205	42	↕	TB203	2	47 35	
328					A3J205	43		J206	$\overline{a}$	20	
329					A4J205	43	20	J206	DD	20	
330	12	24	4		A4S202	05	22	B17	5	16,17	

CONTROL DATA	NORMANDALE OPERATIONS	CODE IDENT 19333	SHEET 23	WL	DOCUMENT NO. 73569000	CD 0	REV. A

CONDUCTOR IDENT.	FIND NO.	GAUGE (REF.)	COLOR (REF.)	LENGTH (APPROX)	ORIGIN		ACCESS FIND NO.	DESTINATION		ACCESS FIND NO.	REMARKS
331	12	24	4		A3TB202	39	21 (53)	A3S200	A1	22	
332					A3TB202	39	(53)	A18	28	16,17	
333					A3TB202	38	27	A25	26	16,17	
334					A3TB202	40	27	B25	26	16,17	
335					A4TB202	39	21 (54)	A4S200	A1	22	
336					A4TB202	39	(54)	B18	28	16,17	
337					A4TB202	38	27	A25	34	16,17	
338	12	24	4		A4TB202	40	27	B25	34	16,17	
339											
340	7 (4)	20	4	7	TB205	1	5 (4)	TB203	10	8 (4)	
341				7		2			9		
342				7		3			8		
343				7		4			7		
344				9		5			6		
345				9		6			5		
346				9		7			4		
347				9		8			3		
348				12		9			2		
349	7 (4)	20	4	12	TB205	10	5 (4)	TB203	1	8 (4)	

CONTROL DATA	NORMANDALE OPERATIONS	CODE IDENT 19333	SHEET 24 of 24	WL	DOCUMENT NO. 73569000	CD 0	REV. A

CONDUCTOR IDENT.	FIND NO.	GAUGE (REF.)	COLOR (REF.)	LENGTH (APPROX)	ORIGIN		ACCESS FIND NO.	DESTINATION		ACCESS FIND NO.	REMARKS
350	25	24									
350A			0		B01	33	29,30	IJ202	K	14	
350B			4		B01	36	29,30	IJ202	M	14	
351	25	24									
351A			0		A01	33	29,30	IJ202	KK	14	
351B			4		A01	36	29,30	IJ202	MM	14	

CONTROL DATA	NORMANDALE OPERATIONS	CODE IDENT 19333	SHEET 1 OF 1	DN	DOCUMENT NO. 73569000	CD 0	REV. A

NOTES:

1. A HEXAGON IN THE ACCESS FIND NO. COLUMN INDICATES THAT THE CONDUCTOR IS ONE OF SEVERAL (ALL WITH THE SAME NUMBER IN THE HEXAGON) GOING INTO THE SAME TERMINAL. THE NUMBER IN FRONT OF A HEXAGON IS THE TERMINAL FIND NO.

2. FOR MECH ASSY AND PL SEE 70821200.

3. CRIMP FIND NO 12 TO THE CONDUCTOR AND FIND NO 37 TO THE SHIELD USING FIND NO 36. THEN TERMINATE BOTH JUMPERS USING FIND NO'S INDICATED IN ACCESS FIND NO. COLUMN.

4. FIND NO.'S AND ACCESS F/N'S SHALL BE FOUND ON FILTER BOARD PL 70716100 FOR COND. IDENT. 340 THRU 349.

CONTROL DATA
MINNEAPOLIS, MINNESOTA

TITLE: WIRE LIST -DECK ASSY

PRODUCT: MULTIPLE DISK DRIVE

WL | DOCUMENT NO. 40064000 | REV. B

SHEET 1 OF 10

REVISION STATUS OF SHEETS

REVISIONS

REV	ECO	DESCRIPTION	DRFT	DATE	CHKD.	APPD.
A		RELEASED		1-19-69		MH
B	PM4733	INACTIVE - SERVICE USE ONLY	CC	3-21-69	BCH	
		SUPERSEDED BY 40099000				

NOTES:

DN 40064000
DETACHED LISTS

COPIES TO

BY D M 11-26-68 CHKD. C.M. 11/26/68 ENGR 11-22-68

FORM AA 1672

CONTROL DATA
MINNEAPOLIS, MINNESOTA

TITLE: WIRE LISTING
DECK ASSY

WL | DOCUMENT NO. 40064000 | REV. B

SHEET 2 OF

CONDUCTOR IDENT.	FIND NO.	GAUGE (REF.)	COLOR (REF.)	LENGTH (APPROX.)	ORIGIN		ACCESS FIND NO	DESTINATION		ACCESS. FIND NO.	REMARKS
1	8	24	4		P205	21	5	S301	C	30,26	
2					S301	NO	30,26	P205	23	5	
3					P205	22	5	S301	NC	30,26	
4					P305	1	19	TB300	3	18	
5					TB300	3	18	P303	6	19	
6					P303	5	19	TB300	4	18	
7					TB300	4	18	P304	2	19	
8					P304	1	19	TB300	3	18	
9					TB300	4	18	P305	2	19	
10					S300B	NO	30,26	P205	24	5	
11					P205	26	5	S300A	C	30,26	
12					S300A	NC	30,26	P205	27	5	
13					P205	28	5	S300B	C	30,26	
14					C1	33	17,20	D1	9	17,20	
15					TB300	5	18	P303	4	19	
16					P303	3	19	P205	37	5	
17					P205	38	5	P304	4	19	
18	8	24	4		P304	3	19	TB300	5	18	
19											

	TITLE		DOCUMENT NO.	REV.
	WIRE LISTING DECK ASSY	WL	40064000	B
		SHEET 3 OF		

CONDUCTOR IDENT.	FIND NO.	GAUGE (REF.)	COLOR (REF.)	LENGTH (APPROX.)	ORIGIN		ACCESS FIND NO.	DESTINATION		ACCESS FIND NO.	REMARKS
20	8	24	4		P306	1	15	P205	39	5	
21					P205	47	5	C2	41	17,20	
22					C2	24	17,20	P205	50	5	
23					P205	51	5	C2	45	17,20	
24					C2	9	17,20	P205	52	5	
25					P205	54	5	C1	32	17,20	
26					C1	44	17,20	P205	57	5	
27					P205	58	5	C1	42	17,20	
28					C1	40	17,20	P205	62	5	
29					P205	63	5	C1	38	17,20	
30					C1	37	17,20	P205	66	5	
31					P205	67	5	C1	13	17,20	
32					C1	14	17,20	P205	72	5	
33					P205	73	5	C1	12	17,20	
34					C1	9	17,20	P205	76	5	
35					P205	77	5	C1	10	17,20	
36					D2	44	17,20	P205	78	5	
37					P205	75	5	D2	42	17,20	
38	8	24	4		D2	40	17,20	P205	74	5	

FORM AA1669

CONTROL DATA MINNEAPOLIS, MINNESOTA	TITLE		DOCUMENT NO.	REV.
	WIRE LISTING DECK ASSY	WL	40064000	B
		SHEET 4 OF		

CONDUCTOR IDENT.	FIND NO.	GAUGE (REF.)	COLOR (REF.)	LENGTH (APPROX.)	ORIGIN		ACCESS FIND NO.	DESTINATION		ACCESS. FIND NO.	REMARKS
39	8	24	4		P205	71	5	D2	38	17,20	
40					D2	37	17,20	P205	70	5	
41					P205	65	5	D2	13	17,20	
42					D2	14	17,20	P205	64	5	
43					P205	60	5	D2	12	17,20	
44					D2	9	17,20	P205	59	5	
45					P205	56	5	D2	10	17,20	
46					D2	32	17,20	P205	55	5	
47					P205	53	5	D2	44	17,20	
48	8	24			C2	12	17,20	D2	41	17,20	
49	9	20			P205	18	6	S303	NO	18	
50					S303	C	18	S302	NC	18	
51					S302	C	18	P205	25	6	
52					P205	32	6	TB300	3	18	
53					TB300	4	18	P205	35	6	
54					P205	36	6	TB300	5	18	
55					C2	46	21,22	D2	46	21,22	
56					D2	48	21,22	C2	48	21,22	
57	9	20	4		C2	6	21,22	D2	6	21,22	

FORM AA1669

	TITLE		DOCUMENT NO.	REV.
MINNEAPOLIS, MINNESOTA	WIRE LISTING DECK ASSY	WL	40064000	B
		SHEET 5 OF		

CONDUCTOR IDENT.	FIND NO.	GAUGE (REF.)	COLOR (REF.)	LENGTH (APPROX.)	ORIGIN		ACCESS FIND NO	DESTINATION		ACCESS. FIND NO.	REMARKS
58	10	16	4		C	GRD	13	D	GRD	13	
59	↑	↑	↑		P205	1	7	D1	48	24,25	
60					D1	46	24,25	P205	3	7	
61	↓	↓	↓		P205	2	7	D1	6	24,25	
62	10	16	4		D	GRD	13	P205	20	7	
63	11	24									
63A			0		P306	2	15	P205	4	5	
63B			4		P306	3	15	P205	8	5	
64	11	24									
64A			0		P205	5	5	J310	8	16,29	
64B			4		P205	10	5	J310	5	16,29	
65	11	24									
65A			0		J310	7	16,29	P205	12	5	
65B			4		J310	4	16,29	P205	15	5	
66	11	24									
66A			0		P205	7	5	J310	6	16,29	
66B			4		P205	11	5	J310	1	16,29	

FORM AA1669

	TITLE		DOCUMENT NO.	REV.
	WIRE LISTING DECK ASSY	WL	40064000	B
		SHEET 6 OF		

CONDUCTOR IDENT.	FIND NO	GAUGE (REF.)	COLOR (REF.)	LENGTH (APPROX.)	ORIGIN		ACCESS FIND NO	DESTINATION		ACCESS. FIND NO	REMARKS
67	11	24									
67A			0		J310	10	16,29	P205	14	5	
67B			4		J310	2	16,29	P205	17	5	
68	11	24									
68A			0		P205	13	5	J310	9	16,29	
68B			4		P205	16	5	J310	3	16,29	
69	11	24									
69A			0		P205	48	5	C2	13	17,20	
69B			4		P205	49	5	C2	16	17,20	
70	11	24									
70A			0		C2	1	17,20	P205	45	5	
70B			4		C2	10	17,20	P205	46	5	
71	11	24									
71A			0		P205	31	5	P305	3	19	
71B			4		P205	34	5	P305	4	19	
72	11	24									
72A			0		P305	5	19	TB300	1	18	
72B			4		P305	6	19	TB300	2	18	

FORM AA1669

	TITLE		DOCUMENT NO.	REV.
MINNEAPOLIS, MINNESOTA	WIRE LISTING DECK ASSY	WL	40064000	B
			SHEET 7 OF	

CONDUCTOR IDENT.	FIND NO	GAUGE (REF.)	COLOR (REF.)	LENGTH (APPROX)	ORIGIN		ACCESS FIND NO	DESTINATION		ACCESS FIND NO	REMARKS
73	11	24									
73A			0		TB300	1	18	P304	5	19	
73B			4		TB300	2	18	P304	6	19	
74	11	24									
74A			0		P303	2	19	TB300	1	18	
74B			4		P303	1	19	TB300	2	18	
75	12	20									
75A			SHIELD		(4)			P205	29	6	
75B			0		TB300	1	18	P205	30	6	
75C			2		TB300	2	18	P205	33	6	
76	31	24									
76A			SHIELD		P205	79	6 (1)	(4)			
76B			9		P205	80	5	D1	36	17,20	
77	31	24									
77A			SHIELD		(4)			P205	79	(1)	
77B			9		D1	37	17,20	P205	82	5	
78	31	24									
78A			SHIELD		(4)			C1	22	17,20	
78B			9		D1	12	17,20	C1	21	17,20	

FORM AA1959

	TITLE		DOCUMENT NO.	REV.
	WIRE LISTING DECK ASSY	WL	40064000	B
			SHEET 8 OF	

CONDUCTOR IDENT.	FIND NO	GAUGE (REF.)	COLOR (REF.)	LENGTH (APPROX)	ORIGIN		ACCESS FIND NO	DESTINATION		ACCESS FIND NO	REMARKS
79	31	24									
79A			SHIELD		C1	26	17,20	(4)			
79B			9		C1	24	17,20	D1	13	17,20	
80	31	24									
80A			SHIELD		D2	20	17,20	C1	20	17,20	
80B			9		D2	18	17,20	C1	18	17,20	
81	31	24									
81A			SHIELD		C1	17	17,20	D2	17	17,20	
81B			9		C1	16	17,20	D2	16	17,20	
82	31	24									
82A			SHIELD		D2	34	17,20	C1	34	17,20	
82B			9		D2	36	17,20	C1	36	17,20	
83	8	24	4		P205	40	5	C2	5	17,20	
84	8	24	4		P205	41	5	C2	17	17,20	
85	8	24	4		P205	42	5	S305	C	34	
86	8	24	4		P205	43	5	S305	NO	34	
87											
88											
89											

CONTROL DATA	WIRE LISTING DECK ASSY	CODE IDENT	SHEET 9	WL	DOCUMENT NO. 40064000	REV. B

CONDUCTOR IDENT	FIND NO	GAUGE (REF)	COLOR (REF)	LENGTH (APPROX)	ORIGIN		ACCESS FIND NO	DESTINATION		ACCESS FIND NO	REMARKS
90											
91											
92											
93											
94											
95											
96											
97											
100	26	24	4	3	C2	40	27,28	R300	2	29	
101	43	20	4	5	C2	37	41,42	TB301	4	25	
102	26	24	4	3	C2	32	27,28	R303	2	29	
103	38	24	94		C1	41	-	C2	14	-	
104	43	20	4	5	C2	25	41, 42	TB301	2	25	
105	26	24	4	2	C2	28	27,28	R302	2	29	
106	26	24	4	2	C2	36	27,28	TB301	1	25	
107	26	24	4	5	C1	16	27,28	R302	1	29,39	
108	26	24	4	5	C1	18	27,28	R303	1	29,39	
109	26	24	4	5	C1	36	27,28	R300	1	29,39	
110	26	24	4	2	TB301	1	25	TB301	3	25	

AA3181 PRINTED IN U.S.A.

CONTROL DATA	WIRL LISTING DECK ASSY	CODE IDENT	SHEET 10 OF 10	WL	DOCUMENT NO 40064000	REV B

CONDUCTOR IDENT	FIND NO	GAUGE (REF)	COLOR (REF)	LENGTH (APPROX)	ORIGIN		ACCESS FIND NO	DESTINATION		ACCESS FIND NO	REMARKS
111	31	18	2		C2	48	-	C1	48	-	
112	32	18	6		C2	6	-	C1	6	-	
113	31	18	2		C2	46	-	C1	46	-	
114	33	16	0	8	C2	50	34,35	GRD		36	
115	33	16	0	8	C1	50	34,35	GRD		36	
116	33	16	0	2	C2	2	34,35	GRD		36	
117	33	16	0	2	C1	2	34,35	GRD		36	
118											
119											
120	23	24	93		D2	24	-	D1	8	-	
121	23	24	93		D2	21	-	D1	5	-	
122	24	24	94		D2	33	-	D1	1	-	
123	17	18	2		D2	48	-	D1	48	-	
124	18	18	6		D2	6	-	D1	6	-	
125	17	18	2		D2	46	-	D1	46	-	
126	19	16	0	2	D2	50	20,21	GRD		22	
127	19	16	0	2	D1	50	20,21	GRD		22	
128	19	16	0	8	D2	2	20,21	GRD		22	
129	19	16	0	8	D1	2	20,21	GRD		22	

PRINTED IN U.S.A.

CONTROL DATA		CODE IDENT	SHEET	WL	DOCUMENT NO. 40064000

1. FOR FIND NO. REFERENCED IN CONDUCTORS 1 THRU 86 SEE PL 40017000, DECK CABLE ASSY.
2. FOR FIND NO. REFERENCED IN CONDUCTORS 100 THRU 117 SEE PL 40015400, RIGHT PRE-AMP CHASSIS ASSY.
3. FOR FIND NO. REFERENCED IN CONDUCTORS 120 THRU 129 SEE PL 40015300, LEFT PRE-AMP CHASSIS ASSY.
4. INDICATES END OF SHIELD IS FLOATING.
5. A HEXAGON IN THE ACCESS FIND NO. COLUMN INDICATES THAT THE CONDUCTOR IS ONE OF SEVERAL CALL WITH THE SAME NUMBER (IN THE HEXAGON) GOING INTO THE SAME TERMINAL. THE NUMBER IN FRONT OF A HEXAGON IS THE TERMINAL FIND NO.

AA3185 PRINTED IN U.S.A.

CONTROL DATA
MINNEAPOLIS, MINNESOTA

TITLE: WIRE LIST -DECK ASSY
PRODUCT: MULTIPLE DISK DRIVE
WL | DOCUMENT NO. 40099000 | REV. J
SHEET 1 OF 12

REVISION STATUS OF SHEETS

REVISIONS

REV.	ECO	DESCRIPTION	DRFT.	DATE	CHKD.	APPD.
A		RLLEASED		1.14.69		MH
B	PM4733	DWG. NO. WAS 40064000	CC	3-21-69	DCH	
C	PM4834	DN CHANGE ONLY	SS	4-14-69	DCH	
D	PM5578	SEE CO	GV	7-15-69	DCH	
E	PE11067	NO CHG	GV	7-31-69	DCH	
F	PE11067A	CANCELLED ECO	GV	8-1-69	DCH	
G	PM5578D	SEE CO	DS	9.22.69	97	9-22-9
H	PE1145-1	CHG WL 76A TO 82B	DC	3/31/70	97	JT
J	PE11461A	CHG WL 76B, 77B, 78B, 79B, 80B, 81B & 82B	DC	3/31/70	97	JT

NOTES:

DN 40099000
DETACHED LISTS

COPIES TO

BY	DM	DATE 11-26-69	CHKD.	C.M.	DATE 11/22/69	ENGR	FWE	DATE 11-22-69

FORM AA 1672

CONTROL DATA
MINNEAPOLIS, MINNESOTA

TITLE
WIRE LISTING
DECK ASSY

WL | DOCUMENT NO. 40099000 | REV. G

SHEET 2 OF

CONDUCTOR IDENT.	FIND NO.	GAUGE (REF.)	COLOR (REF.)	LENGTH (APPROX.)	ORIGIN		ACCESS FIND NO.	DESTINATION		ACCESS. FIND NO.	REMARKS
1	8	24	4		P205	21	5	TB306	3	38	
2	↑	↑	↑		TB306	2	38	P205	23	5	
3					P205	22	5	TB306	4	38	
4					P305	1	19	TB300	3	18	
5					TB300	3	18	P303	6	19	
6					P303	5	19	TB300	4	18	
7					TB300	4	18	P304	2	19	
8					P304	1	19	TB300	3	18	
9					TB300	4	18	P305	2	19	
10					TB302	1	38	P205	24	5	
11					P205	26	5	TB303	2	38	
12					TB303	3	38	P205	27	5	
13					P205	28	5	TB302	4	38	
14					C1	33	17,20	D1	9	17,20	
15					TB300	5	18	P303	4	19	
16					P303	3	19	P205	37	5	
17	↓	↓	↓		P205	38	5	P304	4	19	
18	8	24	4		P304	3	19	TB300	5	18	
19											

FORM AA 1369

TITLE
WIRE LISTING
DECK ASSY

WL | DOCUMENT NO. 40099000 | REV. G

SHEET 3 OF

CONDUCTOR IDENT.	FIND NO.	GAUGE (REF.)	COLOR (REF.)	LENGTH (APPROX.)	ORIGIN		ACCESS FIND NO.	DESTINATION		ACCESS. FIND NO.	REMARKS
20	8	24	4		P306	1	15	P205	39	5	
21	↑	↑	↑		P205	47	5	C2	41	17,20	
22					C2	24	17,20	P205	50	5	
23					P205	51	5	C2	45	17,20	
24					C2	9	17,20	P205	52	5	
25					P205	54	5	C1	32	17,20	
26					C1	44	17,20	P205	57	5	
27					P205	58	5	C1	42	17,20	
28					C1	40	17,20	P205	62	5	
29					P205	63	5	C1	38	17,20	
30					C1	37	17,20	P205	66	5	
31					P205	67	5	C1	13	17,20	
32					C1	14	17,20	P205	72	5	
33					P205	73	5	C1	12	17,20	
34					C1	9	17,20	P205	76	5	
35					P205	77	5	C1	10	17,20	
36					D2	44	17,20	P205	78	5	
37	↓	↓	↓		P205	75	5	D2	42	17,20	
38	8	24	4		D2	40	17,20	P205	74	5	

FORM AA 1369

CONTROL DATA
MINNEAPOLIS, MINNESOTA

TITLE
WIRE LISTING
DECK ASSY

WL | DOCUMENT NO. 40099000 | REV. G

SHEET 4 OF

CONDUCTOR IDENT.	FIND NO.	GAUGE (REF.)	COLOR (REF.)	LENGTH (APPROX.)	ORIGIN		ACCESS. FIND NO.	DESTINATION		ACCESS. FIND NO.	REMARKS
39	8	24	4		P205	71	5	D2	38	17,20	
40	↑	↑	↑		D2	37	17,20	P205	70	5	
41					P205	65	5	D2	13	17,20	
42					D2	14	17,20	P205	64	5	
43					P205	60	5	D2	12	17,20	
44					D2	9	17,20	P205	59	5	
45					P205	56	5	D2	10	17,20	
46					D2	32	17,20	P205	55	5	
47	↓	↓			P205	53	5	D2	44	17,20	
48	8	24			C2	12	17,20	D2	41	17,20	
49	9	20			P205	18	6	S303	NO	18	
50	↑	↑			S303	C	18	S302	NC	18	
51					S302	C	18	P205	25	6	
52					P205	32	6	TB300	3	18	
53					TB300	4	18	P205	35	6	
54					P205	36	6	TB300	5	18	
55					C2	46	21,22	D2	46	21,22	
56	↓	↓	↓		D2	48	21,22	C2	48	21,22	
57	9	20	4		C2	6	21,22	D2	6	21,22	

FORM AA1669

CONTROL DATA
MINNEAPOLIS, MINNESOTA

TITLE
WIRE LISTING
DECK ASSY

WL | DOCUMENT NO. 40099000 | REV. G

SHEET 5 OF

CONDUCTOR IDENT.	FIND NO.	GAUGE (REF.)	COLOR (REF.)	LENGTH (APPROX.)	ORIGIN		ACCESS. FIND NO.	DESTINATION		ACCESS. FIND NO.	REMARKS
58	10	16	4		C	GRD	13	D	GRD	13	
59	↑	↑	↑		P205	1	7	D1	48	24,25	
60					D1	46	24,25	P205	3	7	
61	↓	↓	↓		P205	2	7	D1	6	24,25	
62	10	16	4		D	GRD	13	P205	20	7	
63	11	24									
63A			0		P306	2	15	P205	4	5	
63B			4		P306	3	15	P205	8	5	
64	11	24									
64A			0		P205	5	5	J310	8	16,29	
64B			4		P205	10	5	J310	5	16,29	
65	11	24									
65A			0		J310	7	16,29	P205	12	5	
65B			4		J310	4	16,29	P205	15	5	
66	11	24									
66A			0		P205	7	5	J310	6	16,29	
66B			4		P205	11	5	J310	1	16,29	

FORM AA1669

CONTROL DATA
MINNEAPOLIS, MINNESOTA

TITLE
WIRE LISTING
DECK ASSY

WL | DOCUMENT NO. 40099000 | REV. J

SHEET 6 OF

CONDUCTOR IDENT.	FIND NO.	GAUGE (REF.)	COLOR (REF.)	LENGTH (APPROX.)	ORIGIN		ACCESS. FIND NO.	DESTINATION		ACCESS. FIND NO.	REMARKS
67	11	24									
67A			0		J310	10	16,29	P205	14	5	
67B			4		J310	2	16,29	P205	17	5	
68	11	24									
68A			0		P205	13	5	J310	9	16,29	
68B			4		P205	16	5	J310	3	16,29	
69	11	24									
69A			0		P205	48	5	C2	13	17,20	
69B			4		P205	49	5	C2	16	17,20	
70	11	24									
70A			0		C2	1	17,20	P205	45	5	
70B			4		C2	10	17,20	P205	46	5	
71	11	24									
71A			0		P205	31	5	P305	3	19	
71B			4		P205	34	5	P305	4	19	
72	11	24									
72A			0		P305	5	19	TB300	1	18	
72B			4		P305	6	19	TB300	2	18	

CONTROL DATA
MINNEAPOLIS, MINNESOTA

TITLE
WIRE LISTING
DECK ASSY

WL | DOCUMENT NO. 40099000 | REV. J

SHEET 7 OF

CONDUCTOR IDENT.	FIND NO.	GAUGE (REF.)	COLOR (REF.)	LENGTH (APPROX.)	ORIGIN		ACCESS. FIND NO.	DESTINATION		ACCESS. FIND NO.	REMARKS
73	11	24									
73A			0		TB300	1	18	P304	5	19	
73B			4		TB300	2	18	P304	6	19	
74	11	24									
74A			0		P303	2	19	TB300	1	18	
74B			4		P303	1	19	TB300	2	18	
75	12	20									
75A			SHIELD		(4)			P205	29	6	
75B			0		TB300	1	18	P205	30	6	
75C			2		TB300	2	18	P205	33	6	
76	31	24									
76A			SHIELD		P205	79	39,40 6 (1)	(4)			
76B			9		P205	80	5,8	D1	36	17,20	
77	31	24									
77A			SHIELD		(4)			P205	79	39,40 (1)	
77B			9		D1	37	17,20	P205	82	5,8	
78	31	24									
78A			SHIELD		(4)			C1	22	39,40 17,20	
78B			9		D1	12	17,20	C1	21	39,40 17,20	

FORM AA1669

CONTROL DATA
MINNEAPOLIS, MINNESOTA

TITLE
WIRE LISTING
DECK ASSY

WL | DOCUMENT NO. 40099000 | REV. J
SHEET 8 OF

CONDUCTOR IDENT.	FIND NO.	GAUGE (REF.)	COLOR (REF.)	LENGTH (APPROX.)	ORIGIN		ACCESS. FIND NO.	DESTINATION		ACCESS. FIND NO.	REMARKS
79	31	24									
79A			SHIELD		C1	26	39,40 17,20	⚠4			
79B			9		C1	24	8 17,20	D1	13	17,20	
80	31	24									
80A			SHIELD		D2	20	39,40 17,20	C1	20	39,40 17,20	
80B			9		D2	18	8 17,20	C1	18	8 17,20	
81	31	24									
81A			SHIELD		C1	17	39,40 17,20	D2	17	39,40 17,20	
81B			9		C1	16	8 17,20	D2	16	8 17,20	
82	31	24									
82A			SHIELD		D2	34	39,40 17,20	C1	34	39,40 17,20	
82B			9		D2	36	8 17,20	C1	36	8 17,20	
83	8	24	4		P205	40	5	C2	5	17,20	
84	8	24	4		P205	41	5	C2	17	17,20	
85	9	20	4		P205	42	5	TB305	8	38	
86	9	20	4		P205	43	5	TB305	2	38	
87											
88											
89											

FORM AA1669

CONTROL DATA | WIRE LISTING DECK ASSY | CODE IDENT | SHEET 9 | WL | DOCUMENT NO. 40099000 | REV. J

CONDUCTOR IDENT.	FIND NO.	GAUGE (REF.)	COLOR (REF.)	LENGTH (APPROX)	ORIGIN		ACCESS FIND NO.	DESTINATION		ACCESS FIND NO.	REMARKS
90											
91											
92											
93											
94											
95											
96											
97											
100	26	24	4	3	C2	40	27,28	R300	2	29	
101	43	20	4	5	C2	37	41,42	TB301	4	25	
102	26	24	4	3	C2	32	27,28	R303	2	29	
103	38	24	94		C1	41	-	C2	14	-	
104	43	20	4	5	C2	25	41, 42	TB301	2	25	
105	26	24	4	2	C2	28	27,28	R302	2	29	
106	26	24	4	2	C2	36	27,28	TB301	1	25	
107	26	24	4	5	C1	16	27,28	R302	1	29,39	
108	26	24	4	5	C1	18	27,28	R303	1	29,39	
109	26	24	4	5	C1	36	27,28	R300	1	29,39	
110	26	24	4	2	TB301	1	25	TB301	3	25	

AA3183 PRINTED IN U.S.A.

CONTROL DATA	WIRE LISTING DECK ASSY	CODE IDENT	SHEET 10	WL	DOCUMENT NO. 40099000	REV G

CONDUCTOR IDENT.	FIND NO.	GAUGE (REF.)	COLOR (REF.)	LENGTH (APPROX)	ORIGIN		ACCESS FIND NO.	DESTINATION		ACCESS FIND NO.	REMARKS
111	31	18	2		C2	48	-	C1	48	-	
112	32	18	6		C2	6	"	C1	6	-	
113	31	18	2		C2	46	"	C1	46	-	
114	33	16	0	8	C2	50	34,35	GRD		36	
115	33	16	0	8	C1	50	34,35	GRD		36	
116	33	16	0	2	C2	2	34,35	GRD		36	
117	33	16	0	2	C1	2	34,35	GRD		36	
118											
119											
120	23	24	93		D2	24	-	D1	8	-	
121	23	24	93		D2	21	-	D1	5	-	
122	24	24	94		D2	33	-	D1	1	-	
123	17	18	2		D2	48	-	D1	48	-	
124	18	18	6		D2	6	-	D1	6	-	
125	17	18	2		D2	46	-	D1	46	-	
126	19	16	0	2	D2	50	20,21	GRD		22	
127	19	16	0	2	D1	50	20,21	GRD		22	
128	19	16	0	8	D2	2	20,21	GRD		22	
129	19	16	0	8	D1	2	20,21	GRD		22	
130											

AA3183 PRINTED IN U.S.A.

WIRE LISTING DECK ASSY

CONTROL DATA	NORMANDALE OPERATION	CODE IDENT 19333	SHEET 11	WL	DOCUMENT NO. 40099000	REV. G

CONDUCTOR IDENT	FIND NO	GAUGE (REF.)	COLOR (REF.)	LENGTH (APPROX)	ORIGIN		ACCESS FIND NO.	DESTINATION		ACCESS FIND NO.	REMARKS
131											
132											
133											
134	4	20	4	15"	TB305	3	7	S305	C	5,6	
135	4	20	4	15"	TB305	1	7	S305	NO	5,6	
136	4	24	4	4"	TB306	1	7	S301	NO	5,6	
137	4	24	4	4"	TB306	3	7	S301	C	5,6	
138	4	24	4	4"	TB306	4	7	S301	NC	5,6	
139											
140	4	24	4	1"	TB302	3	4	S300B	NO	5,6	
141	4	24	4	1"	TB302	4	4	S300B	C	5,6	
142	4	24	4	1"	TB303	1	4	S300A	NC	5,6	
143	4	24	4	1"	TB303	2	4	S300A	C	5,6	
144											
145											
146											
147	2										
147A			5		J306	1	4	TB304	1	6	
147B			2		J306	2	4	L300		13,6	
147C			6		J306	3	(3) 4	L300		13,6	

AA3183 PRINTED IN U.S.A.

WIRE LISTING DECK ASSY

CONTROL DATA	NORMANDALE OPERATIONS	CODE IDENT 19333	SHEET 12 OF 12	WL	DOCUMENT NO. 40099000	REV. G

CONDUCTOR IDENT.	FIND NO.	GAUGE (REF.)	COLOR (REF.)	LENGTH (APPROX)	ORIGIN		ACCESS FIND NO.	DESTINATION		ACCESS FIND NO.	REMARKS
147D			9		J306	3	⟨3⟩	GRD		7	
148											
149											
150											
151											
152											
153	42	24	4	2"	TB304	3	51	S304	NO	39,40	
154	42	24	4	2"	S304	C	39,40	TB304	4	51	
155	42	24	4	8"	TB304	4	51	GRD		41	

AA3183

PRINTED IN U.S.A.

		CODE IDENT	SHEET 1 OF 1	DN	DOCUMENT NO. 40099000	REV. G

1. FOR FIND NO. REFERENCED IN CONDUCTORS 1 THRU 86 SEE PL 40098900, DECK CABLE ASSY.
2. FOR FIND NO. REFERENCED IN CONDUCTORS 100 THRU 117 SEE PL 40099800, RIGHT PRE-AMP CHASSIS ASSY.
3. FOR FIND NO. REFERENCED IN CONDUCTORS 120 THRU 129 SEE PL 40099900 LEFT PRE-AMP CHASSIS ASSY.
4. ⚠ INDICATES END OF SHIELD IS FLOATING.
5. A HEXAGON IN THE ACCESS FIND NO. COLUMN INDICATES THAT THE CONDUCTOR IS ONE OF SEVERAL (ALL WITH THE SAME NUMBER IN THE HEXAGON) GOING INTO THE SAME TERMINAL. THE NUMBER IN FRONT OF A HEXAGON IS THE TERMINAL FIND NO.
6. FOR FIND NO. REFERENCED IN CONDUCTORS 134 THRU 135 SEE PL 70804600, SWITCH SUPPRESSION ASSY; FOR FIND NO. 136 THRU 138 SEE PL 70804601, SWITCH SUPPRESSION ASSY.
7. FOR FIND NO. REFERENCED IN CONDUCTORS 140 THRU 141 SEE PL 70959501, COMPONENT ASSY; FOR FIND NO. 142 THRU 143 SEE PL 70959502, COMPONENT ASSY.
8. FOR FIND NO. REFERENCED IN CONDUCTORS 147,A,B,C,D SEE PL 41279400 MAGNET ASSY.
9. FOR FIND NO. REFERENCED IN CONDUCTORS 153 THRU 155 SEE PL 40014100 HEAD CARRIAGE ASSY.

AA3183

PRINTED IN U.S.A.

CONTROL DATA
MINNEAPOLIS, MINNESOTA

TITLE	DOCUMENT NO.	REV.
WIRE LIST – 1X FINAL ASSEMBLY	WL 40064400	B
PRODUCT: MULTIPLE DISK DRIVE	SHEET 1 OF 3	

REVISION STATUS OF SHEETS

REVISIONS

REV	ECO	DESCRIPTION	DRFT.	DATE	CHKD.	APPD.
A		RELEASED		1.19.69		MH
B	PM5797	SEE CO	BL	5.5.69	DCH	5-7

NOTES:

1. FOR FIND NO. REFERENCED IN CONDUCTORS 1 THRU 6 SEE PL 40016900, CABLE ASSY W9.
2. FOR FIND NO. REFERENCED IN CONDUCTORS 10 THRU 12 SEE PL 40017400, CABLE ASSY W16.
3. INDICATES END OF SHIELD IS FLOATING.

COPIES TO | BY D. M. 10-29-68 | CHKD. C. M. 11/15/68 | ENGR TOE 11-15-68

FORM AA 1672

TITLE	DOCUMENT NO.	REV.
WIRE LISTING 1X FINAL ASSEMBLY	WL 40064400	B
MINNEAPOLIS, MINNESOTA	SHEET 2 OF	

CONDUCTOR IDENT.	FIND NO.	GAUGE (REF.)	COLOR (REF.)	LENGTH (APPROX.)	ORIGIN		ACCESS. FIND NO.	DESTINATION		ACCESS. FIND NO.	REMARKS
1	1	12	4		FL01	L	2	CB02	AT	2	1 Ø A
2	1	12	4		FL02	L	2	CB02	BT	2	Ø B
3	1	12	4		FL03	L	2	CB02	CT	2	Ø C
4	1	12	4		FL04	L	2	TB01	1	3	NEUTRAL
5	1	12	4		FILTER BOX	FRAME	2	TB01	4	3	A C GRD
6	4	20	4		FILTER BOX	FRAME	5	SHIELD	–	6	1
7											
8											
9											
10	3	20									
10A			SHIELD		P05	3	5,2	3			2
10B			0		P05	1	5	B200	1	6,7	
10C			2		P05	2	5	B200	2	6,7	
11	3	20									
11A			SHIELD		P05	6	5,2	3			
11B			0		P05	4	5	B201	1	6,7	
11C			2		P05	5	5	B201	2	6,7	
12	3	20									
12A			SHIELD		P05	9	5,2	3			2

FORM AA 1669

CONTROL DATA
MINNEAPOLIS, MINNESOTA

TITLE: WIRE LISTING
1X FINAL ASSEMBLY

WL | DOCUMENT NO. 40064400 | REV. B

SHEET 3 OF 3

CONDUCTOR IDENT.	FIND NO.	GAUGE (REF.)	COLOR (REF.)	LENGTH (APPROX.)	ORIGIN		ACCESS. FIND NO.	DESTINATION		ACCESS. FIND NO.	REMARKS
12B			0		P05	7	5	B202	1	6,7	2
12C			2		P05	8	5	B202	2	6,7	2

FORM AA1669

CONTROL DATA
MINNEAPOLIS, MINNESOTA

TITLE: WIRE LIST - 2X FINAL ASSEMBLY
PRODUCT: MULTIPLE DISK DRIVE

W. | DOCUMENT NO. 40064500 | REV. B

SHEET 1 OF 3

REVISION STATUS OF SHEETS

REVISIONS

REV	ECO	DESCRIPTION	DRFT.	DATE	CHKD.	APPD
A		RELEASED		1-14-69		
B	PM 5197	SEE CO.	BL	5-5-69		5-7

NOTES:
1. FOR FIND NO. REFERENCED IN CONDUCTORS 1 THRU 6 SEE PL 40016900, CABLE ASS W9.
2. FOR FIND NO. REFERENCED IN CONDUCTORS 10 THRU 12 SEE PL 40017400, CABLE ASST W16.
3. INDICATES END OF SHIELD IS FLOATING.

COPIES TO

BY	D.M.	DATE 10-29-68	CHKD.	C.M.	DATE 5/5/69	ENGR	DATE 5/6/69

FORM AA 1672

CONTROL DATA		CODE IDENT	SHEET 2	WL	DOCUMENT NO. 40064500	REV. B

CONDUCTOR IDENT.	FIND NO.	GAUGE (REF.)	COLOR (REF.)	LENGTH (APPROX)	ORIGIN		ACCESS FIND NO.	DESTINATION		ACCESS FIND NO.	REMARKS
1	1	12	4		FL01	L	2	CB02	AT	2	1 Ø A
2	1	12	4		FL02	L	2	CB02	BT	2	Ø B
3	1	12	4		FL03	L	2	CB02	CT	2	Ø C
4	1	12	4		FL04	L	2	TB01	1	3	NEUTRAL
5	1	12	4		FILTER BOX FRAME		2	TB01	4	3	A C GRD
6	4	20	4		FILTER BOX FRAME		5	SHIELD	-	6	1
7											
8											
9											
10	3	20									
10A			SHIELD		P05	3	5,2	3			2
10B			0		P05	1	5	B200	1	6,7	
10C			2		P05	2	5	B200	2	6,7	
11	3	20									
11A			SHIELD		P05	6	5,2	3			
11B			0		P05	4	5	B201	1	6,7	
11C			2		P05	5	5	B201	2	6,7	
12	3	20									
12A			SHIELD		P05	9	5,2	3			2

AA3183

PRINTED IN U.S.A.

CONTROL DATA	2X FINAL ASSEMBLY	CODE IDENT	SHEET 3 OF 3	WL	DOCUMENT NO. 40064500	REV. B

CONDUCTOR IDENT	FIND NO	GAUGE (REF)	COLOR (REF)	LENGTH (APPROX)	ORIGIN		ACCESS FIND NO.	DESTINATION		ACCESS FIND NO.	REMARKS
12B			0		P05	7	5	B202	1	6,7	2
12C			2		P05	8	5	B202	2	6,7	2

AA3183

PRINTED IN U.S.A.

CONTROL DATA
MINNEAPOLIS, MINNESOTA

TITLE: WIRE LIST - CONTROL PANEL
PRODUCT: RESOB
WL | DOCUMENT NO. 40065200 | REV. B
SHEET 1 OF 3

REVISION STATUS OF SHEETS

REVISIONS

REV.	ECO	DESCRIPTION	DRFT.	DATE	CHKD.	APPD.
A		RELEASED				
B	PM4506	SEE CO	TM	2-12-69	DCH	2.13.69

NOTES:

1. FOR MECHANICAL ASSY AND PARTS LIST SEE 40011500.

COPIES TO | BY | DATE 7-16-68 | CHKD. | DATE 7-16-68 | APPD. | DATE 7/23/68

CONTROL DATA
MINNEAPOLIS, MINNESOTA

TITLE: WIRE LISTING
WL | DOCUMENT NO. 40065200 | REV. B
SHEET 2 OF 3

CONDUCTOR IDENT.	FIND NO.	GAUGE (REF.)	COLOR (REF.)	LENGTH (APPROX.)	ORIGIN		ACCESS. FIND NO.	DESTINATION		ACCESS. FIND NO.	REMARKS
1	21	24	4	11	J600	A	24	XDS504	4	14	
2	↑	↑	↑	9	J600	B	↑	S503	NO	↑	
3				7	J600	C	↓	XDS503	1		
4				6	J600	D	24	XDS503	3	↓	
5				7	XDS501	2	14	S503	C	14	
6				10	XDS504	1	14	XDS502	2	14,26	
7				8	J600	P	24	XDS500	1	14	
8				7	J600	U	↑	XDS502	3	14,26	
9				7	J600	V		XDS502	7	↑	
10				7	J600	W		XDS502	8		
11				7	J600	X		XDS502	9	↓	
12				7	J600	Y	↓	XDS502	10	14,26	
13				10	J600	Z	24	XDS501	4	14	
14	↓	↓		6	XDS503	2	14	XDS504	2	14	
15	21	24		7	J600	b	24	XDS502	1	14,26	
16	22	20		10	J600	E	23	XDS501	1	14	
17	↑	↑		7	J600	F	↑	XDS500	3	14	
18	↓	↓	↓	11	J600	H	↓	S501B	C	14	
19	22	20	4	11	J600	J	23	S501C	C	14	

FORM AA 1669

CONTROL DATA	NORMANDALE OPERATIONS	CODE IDENT	SHEET 3 OF 3	WL	DOCUMENT NO. 40065200	REV. B

CONDUCTOR IDENT.	FIND NO.	GAUGE (REF.)	COLOR (REF.)	LENGTH (APPROX)	ORIGIN		ACCESS FIND NO.	DESTINATION		ACCESS FIND NO.	REMARKS
20	22	20	4	11	J600	K	23	S501C	NC	14	
21	↑	↑	↑	11	J600	L	↑	S501C	NO	↑	
22				11	J600	M		S501B	NO		
23				11	J600	N		S501B	NC		
24				11	J600	R		S501A	NC		
25	↓	↓	↓	11	J600	S	↓	S501A	NO	↓	
26	22	20	4	11	J600	T	23	S501A	C	14	
27	24	24	4	11	J600	a	24	XDS504	3	14	

DWN	D. MEYER	5/3/67	CONTROL DATA	TITLE	PREFIX	DOCUMENT NO.	REV
CHKD	[illegible]	5-14-67		WIRE LIST - CONTROL PANEL	WL	70957900	C
ENG	[illegible]	[illegible]	NORMANDALE DIVISION				
MFG			CODE IDENT 19333	FIRST USED ON MULT DISK DRIVE		SHEET 1 OF 3	
APPR							

SHEET REVISION STATUS

REVISION RECORD

REV	ECO	DESCRIPTION	DRFT	DATE	APP
A		RELEASED		5-25-67	[illegible]
B	PE21362	CHG FN ON IDENT. NOS. 9-12	DM	7/8/70 Corr	II
C	PE21886	REMOVE WIRE	SB	1/6/71	II

NOTES:

1. FOR MECHANICAL ASSY AND PARTS LIST SEE 70957600
2. A HEXAGON IN THE ACCESS FIND NO. COLUMN INDICATES THAT THE CONDUCTOR IS ONE OF SEVERAL (ALL WITH THE SAME NUMBER IN THE HEXAGON) GOING INTO THE SAME TERMINAL.
3. OPPOSITE MOUNTING END.
4. MOUNTING END.

DETACHED LISTS

AA3180

Sager MAP PRINTED IN U.S.A.

CONTROL DATA	NORMANDALE	CODE IDENT 19333	SHEET 2	WL	DOCUMENT NO. 70957900	REV. C

CONDUCTOR IDENT.	FIND NO.	GAUGE (REF.)	COLOR (REF.)	LENGTH (APPROX)	ORIGIN		ACCESS FIND NO.	DESTINATION		ACCESS FIND NO.	REMARKS
1	35	24	4	11	J600	A	28	XDS504	4	13	
2	↑	↑	↑	10	J600	B	28	S503	NO	13	
3				10	J600	C	28	XDS503	1	13	
4				9	J600	D	28	XDS503	3	13	
5				7	XDS501	2	13	S503	C	13	
6	↓	↓		12	XDS503	2	13	XDS502	2	13,30	
7	35	24		12	J600	P	28	XDS500	1	13	
8	36	20		7	XDS 501-3	C	13	C505	OME	13	△3
9	35	24		12	J600	V	28	S510	N.O	48,30	
10	↑	↑		12	J600	W	28	S511	N.O	48,30	
11				7	J600	X	28	S512	N.O	48,30	
12				7	J600	Y	28	S513	N.O	48,30	
13				12	J600	Z	28	XDS501	4	13	
14	↓	↓		6	XDS500	4	13	XDS504	2	13	
15	35	24		7	J600	b	28	XDS502	1	13,29	
16	36	20		14	J600	E	27	XDS501	1	13	
17	↑	↑		11	J600	F	27	XDS500	3	13	
18		↓	↓	15	J600	H	27	S501B	C	13	
19	↓	20	4	15	J600	J	27	S501C	C	13	
20	36	20	4	15	J600	K	27	S501C	NC	13	

CONTROL DATA	NORMANDALE	CODE IDENT 19333	SHEET 3	WL	DOCUMENT NO. 70957900	REV. C

CONDUCTOR IDENT.	FIND NO.	GAUGE (REF.)	COLOR (REF.)	LENGTH (APPROX)	ORIGIN		ACCESS FIND NO.	DESTINATION		ACCESS FIND NO.	REMARKS
21	36	20	4	15	J600	L	27	S501C	NO	13	
22	↑	↑	↑	15	J600	M	27	S501B	NO	13	
23				15	J600	N	27	S501B	NC	13	
24				20	J600	R	27	TB501	8	13	
25	↓	↓		20	J600	S	27	TB501	4	13	
26	36	20		21	J600	T	27	C505	ME	13	△4
27	35	24		12	J600	a	28	XDS504	3	13	
28	↑	↑		3	S514	NO	31,30	TB500	4	13	
29				3	S510	C	⬡1	S511	C	⬡2 30,31	
30				3	S511	C	⬡2	S512	C	⬡3 30,31	
31				2	S512	C	⬡3	S513	C	30,31	
32				3	S510	C	⬡1 30,31	TB500	4	13	
33	↓	↓		10	J600	U	28	S514	C	⬡4 30,31	
34	35	24		2	S514	C	⬡4	TB500	2	13	
35	36	20		2	S501A	NO	13	TB501	3	13	
36	35	24	↓	3	XDS501	1	13	TB501	1	13	
37	36	20	4	4	S501A	NC	13	TB501	7	13	

AA3183

CONTROL DATA CORPORATION
MINNEAPOLIS, MINNESOTA

TITLE: WIRE LIST-FILTER BOX ASSY
PRODUCT: MULT DISK DRIVE

WL	DOCUMENT NO.	REV.
	40065300	B

SHEET 1 OF 2

REVISION STATUS OF SHEETS

REVISIONS

REV.	ECO	DESCRIPTION	DRFT.	DATE	CHKD.	APPD.
A		RELEASED		1.16.69		MK
B.	PM5548	NOTE 1. NO. CHG. ONLY	GV	6-25-69	DCH	6-26

NOTES:
1. FOR MECH ASSY AND PL SEE 70806500.

COPIES TO

BY	C.M.	DATE 11/18/68	CHKD.	C.M.	DATE 11/22/68	ENGR	FWE	DATE 11-22-68

CONTROL DATA — WIRE LIST-FILTER BOX ASSY | CODE IDENT | SHEET 2 OF 2 | WL | DOCUMENT NO. 40065300 | REV. B

CONDUCTOR IDENT.	FIND NO.	GAUGE (REF.)	COLOR (REF.)	LENGTH (APPROX)	ORIGIN		ACCESS FIND NO.	DESTINATION		ACCESS FIND NO.	REMARKS
1	23	12	0	6	CB01	AB	19	FL01	R	19	
2	24	12	2	6	CB01	BB	19	FL02	R	19	
3	25	12	3	6	CB01	CB	19	FL03	R	19	

AA3183 PRINTED IN U.S.A.

CONTROL DATA
MINNEAPOLIS, MINNESOTA

TITLE: WIRE LIST - POWER SUPPLY ASSY
PRODUCT: MULTIPLE DISK DRIVE

DOCUMENT NO.	REV.
WL 40019800	K

SHEET 1 OF 25

REVISION STATUS OF SHEETS

REVISIONS

REV.	ECO	DESCRIPTION	DRFT.	DATE	CHKD.	APPD
A		RELEASED.		1-17-69		K
B	PM4734	SEE CO	TEM	3-10-69	DCH	3-13-9
C	PM5243	SEE CO	GV	6-8-69	97	6-12-69
D	PM5578	SEE CO	GV	7-15-69	DCH	7-21
E	PE11066	SEE CO	GV	7-18-69	DCH	7-21
F	PE11088	SEE CO	GV	8-14-69	DCH	8-18
G	PM5578C	SEE CO S/N 311	GV	8-14-69	DCH	8-18
H	PE11148	INACTIVE, SERVICE USE ONLY,				
	S/N 5,15	SUPERSEDED BY 70821700	DS	9-18-69	97	9-24-9
J	11148 A	REACTIVATED	MK	1/13/70	97	I
K	PE11049	INACTIVE, SERVICE USE ONLY,	MK	2/2/70	97	I
		SUPERCEDED BY 70716700				

NOTES:

DN 40019800
DETACHED LISTS

COPIES TO

BY O. M. DATE 11-17-69 CHKD. C.M. DATE 12/3/69 ENGR FWE DATE 12-9-69

CONTROL DATA
MINNEAPOLIS, MINNESOTA

TITLE: WIRE LISTING
POWER SUPPLY ASSY

DOCUMENT NO.	REV.
WL 40019800	K

SHEET 2 OF

CONDUCTOR IDENT.	FIND NO.	GAUGE (REF.)	COLOR (REF.)	LENGTH (APPROX.)	ORIGIN		ACCESS. FIND NO.	DESTINATION		ACCESS. FIND NO.	REMARKS
1	3	16	4		C14	L	4	T01	3	7 (1)	
2					T01	3	(1)	CR04	4	4,15	
3					CR04	3	4,15	C05	N	9 (2)	
4					C05	N	(2)	C09	N	11 (3)	
5					C09	N	(3)	TB02	4	4	
6					TB02	2	4	C06	N	11 (4)	
7					C06	N	(4)	R02	R	4,15	
8					R02	L	4,15	C06	P	9 (5)	
9					C06	P	(5)	CR05	1	4,15	
10					CR05	4	4,15	T01	9	1	
11					T01	10	1	CR05	2	4,15	
12					CR05	3	4,15	C06	N	(4)	
13					C08	N	6	R04	L	10	
14					R04	R	10	C04	P	6	
15					T08	1	4,15	T05	3	4	
16					T05	1	4	T01	8	7 (6)	
17					T01	8	(6)	T03	1	4	
18					T03	3	4	T09	1	4	
19	3	16	4		T09	2	4	T01	6	1	

FORM AA 1588

CONTROL DATA
MINNEAPOLIS, MINNESOTA

TITLE
WIRE LISTING
POWER SUPPLY ASSY

WL | DOCUMENT NO. 40019800 | REV. K

SHEET 3 OF

CONDUCTOR IDENT.	FIND NO.	GAUGE (REF.)	COLOR (REF.)	LENGTH (APPROX.)	ORIGIN		ACCESS. FIND NO.	DESTINATION		ACCESS. FIND NO.	REMARKS
20	3	16	4		T01	4	1	T09	3	4	
21					T09	4	4	CR04	2	4,15	
22					CR04	1	4,15	C05	P	9 (7)	
23					C05	P	(7)	C09	P	9 (8)	
24					C09	P	(8)	R03	T	5, 12	
25					R03	B	5, 12	C09	N	(3)	
26					C02	N	6	R01	B	5, 12	
27					R01	T	5, 12	C02	P	6	
28					T05	4	4	T01	5	7 (9)	
29					T01	5	(9)	T03	4	4	
30					T02	1	4	T01	8	7 (10)	
31					T01	8	(10)	T04	1	4	
32					T04	3	4	T07	1	4	
33					T07	2	4	T01	7	7 (11)	
34					T01	7	(11)	T08	2	4,15	
35					T08	3	4	TB08	3	4	
36					TB07	2	4	T07	3	4,15	
37					T07	4	4	C07	N	6	
38	3	16	4		T07	5	4	TB08	2	4	

FORM AA1649

CONTROL DATA
MINNEAPOLIS, MINNESOTA

TITLE
WIRE LISTING
POWER SUPPLY ASSY

WL | DOCUMENT NO. 40019800 | REV. K

SHEET 4 OF

CONDUCTOR IDENT.	FIND NO.	GAUGE (REF.)	COLOR (REF.)	LENGTH (APPROX.)	ORIGIN		ACCESS. FIND NO.	DESTINATION		ACCESS. FIND NO.	REMARKS
39	3	16	4		TB07	3	4	T08	6	4	
40					C14	R	4	T01	8	1	
41					T01	5	7 (12)	T02	4	4	
42	3	16			T04	4	4	T01	5	(12)	
43	2	14			TB07	1	8	T01	13	7	
44					T01	12	7	C07	P	9	
45					C07	P	9	C03	N	9	
46					C03	P	9	T08	5	8	
47					TB08	1	8	T01	11	7	
48					T01	15	7	C01	N	9	
49					C01	N	9	C02	N	9	
50					C02	P	9	L01	2	8	
51					L01	1	8	C01	P	9	
52					C04	N	9	C08	P	9	
53					C08	P	9	C07	P	9	
54					C08	P	9	TB02	3	8	
55	2	14	4		TB02	1	8	C02	N	9	
56											
57											

FORM AA1649

CONTROL DATA
MINNEAPOLIS, MINNESOTA

TITLE
WIRE LISTING
POWER SUPPLY ASSY

WL
DOCUMENT NO. 40019800
REV. K
SHEET 5 OF

CONDUCTOR IDENT.	FIND NO.	GAUGE (REF.)	COLOR (REF.)	LENGTH (APPROX.)	ORIGIN		ACCESS. FIND NO.	DESTINATION		ACCESS. FIND NO.	REMARKS
58											
59											
60											
61											
62											
63											
64											
65											
66											
67											
68											
69											
70											
71											
72											
73											
74											
75											
76											

CONTROL DATA
MINNEAPOLIS, MINNESOTA

TITLE
WIRE LISTING
POWER SUPPLY ASSY

WL
DOCUMENT NO. 40019800
REV. K
SHEET 6 OF

CONDUCTOR IDENT.	FIND NO.	GAUGE (REF.)	COLOR (REF.)	LENGTH (APPROX.)	ORIGIN		ACCESS. FIND NO.	DESTINATION		ACCESS. FIND NO.	REMARKS
77	4	16	4		CB03	AT	8	CB02	AT	9 (1)	
78	↑	↑	↑		CB02	AT	(1)	CB103	AT	8	
79					CB03	AB	8	C21	ME	5	△13
80					TB11	1	5	J03	1	13	
81					J03	2	13	FL12	CAP-B	5	
82					C22	ME	5	CB03	BB	8	△13
83					CB103	BT	8	CB02	BT	9 (3)	
84					CB02	BT	(3)	CB03	BT	8	
85					CB02	AB	8	J02	1	13	
86					J02	2	13	CB02	BB	8	
87					CB03	CT	8	CB02	CT	12 (4)	
88					CB02	CT	(4)	CB103	CT	8	
89					CB03	CB	8	C23	ME	5	△13
90					FL13	CAP-B	5	J03	3	13	
91					J02	3	13	CB02	CB	8	
92	↓	↓	↓		CB02	AT	9 (5)	XF03	T	10	
93	4	16	4		XF03	8	10	TB11	2	5	
94											
95	4	16	4		C123	ME	5	CB103	CB	8	△13

FORM AA1669

CONTROL DATA
MINNEAPOLIS, MINNESOTA

TITLE
WIRE LISTING
POWER SUPPLY ASSY

WL | DOCUMENT NO. 40019800 | REV. K

SHEET 7 OF

CONDUCTOR IDENT.	FIND NO.	GAUGE (REF.)	COLOR (REF.)	LENGTH (APPROX.)	ORIGIN		ACCESS FIND NO.	DESTINATION		ACCESS. FIND NO.	REMARKS
96	4	16	4		CB103	BB	8	C122	ME	5	(13)
97	↓	↓	↓		FL113	CAP-T	5	J103	3	13	
98					J103	2	13	FL112	CAP-T	5	
99					TB111	1	5	J103	1	13	
100					C121	ME	5	CB103	AB	8	(13)
101					XF04	B	10	FL05	L	8	
102					FL06	L	8	XF05	B	10	
103	↓	↓			XF05	T	10	CB02	CT	(4)	
104	4	16			CB02	BT	9 (9)	XF04	T	10	
105	3	20			TB03	11	10	TB03	9	10	
106	↓	↓			TB03	9	10	TB03	7	10	
107					TB03	1	10	CB02	AT	(5)	
108					CB02	BT	(9)	TB03	3	10	
109					TB03	5	10	CB02	CT	8 (10)	
110					CB02	CT	(10)	DS04	B	10	
111					DS04	T	10	TB01	1	11	
112					TB01	1	11	P106	2	14	
113	↓	↓	↓		P106	1	14	TB111	1	5	
114	3	20	4		FL114	CAP-T	5	J103	6	14	

CONTROL DATA
MINNEAPOLIS, MINNESOTA

TITLE
WIRE LISTING
POWER SUPPLY ASSY

WL | DOCUMENT NO. 40019800 | REV. K

SHEET 8 OF

CONDUCTOR IDENT.	FIND NO.	GAUGE (REF.)	COLOR (REF.)	LENGTH (APPROX.)	ORIGIN		ACCESS FIND NO.	DESTINATION		ACCESS. FIND NO.	REMARKS
115	3	20	4		J103	7	14	TB01	2	11	
116	↓	↓	↓		TB01	2	11	J03	7	14	
117					J03	6	14	FL14	CAPB	5	
118					TB11	2	5	J05	1	14	
119					J05	2	14	TB01	1	11	
120					TB01	1	11	TB03	7	10	
121					J03	8	14	TB01	4	11	
122					TB01	4	11	J103	8	14	
123					J103	5	14	TB01	3	11	
124					TB01	3	11	J05	3	14	
125					J05	4	14	TB11	2	5	
126					TB11	2	5	J05	7	14	
127					J05	8	14	TB01	2	11	
128					TB01	2	11	J05	5	14	
129					J05	6	14	TB01	4	11	
130					TB01	4	11	J05	9	14	
131					J103	4	14	TB01	3	11	
132	↓	↓	↓		TB01	3	11	J03	5	14	
133	3	20	4		J03	4	14	TB01	3	11	

FORM AA1669

CONTROL DATA
MINNEAPOLIS, MINNESOTA

TITLE
WIRE LISTING
POWER SUPPLY ASSY

WL | DOCUMENT NO. 40019800 | REV. K

SHEET 9 OF

CONDUCTOR IDENT.	FIND NO.	GAUGE (REF.)	COLOR (REF.)	LENGTH (APPROX)	ORIGIN		ACCESS. FIND NO.	DESTINATION		ACCESS. FIND NO.	REMARKS
134	3	20	4		TB01	1	11	R06	2	14	
135	〃	〃	〃		P06	1	14	TB11	1	5	
136					J02	4	14	TB01	3	11	
137					TB01	4	11	J02	5	14	
138					TB03	2	10	TB03	8	10	
139					TB03	10	10	TB03	4	10	
140					TB03	6	10	TB03	12	10	
141					B01	L	17,18	TB11	2	5	
142					TB111	2	5	B02	L	17,18	
143	▽	▽	▽		B02	R	17,18	TB01	2	11	
144	3	20	4		TB01	2	11	B01	R	17,18	
145											
146											
147											
148											
149											
150											
151											
152											

CONTROL DATA
MINNEAPOLIS, MINNESOTA

TITLE
WIRE LISTING
POWER SUPPLY ASSY

WL | DOCUMENT NO. 40019800 | REV. K

SHEET 10 OF

CONDUCTOR IDENT.	FIND NO.	GAUGE (REF.)	COLOR (REF.)	LENGTH (APPROX)	ORIGIN		ACCESS. FIND NO.	DESTINATION		ACCESS. FIND NO.	REMARKS
153	10	16	4		CB07	T	2	C02	P	7(1)	
154	〃	〃	〃		C02	P	(1)	CB107	T	2	
155					CB106	T	2	C09	P	7(2)	
156					C09	P	(2)	CB06	T	2	
157					CB06	B	2	C32	ME	5,	△13
158					FL15	ME	5,	TB02	11	12	△13
159					TB02	11	12	J04	21	3	
160					J04	20	3	K102	1A		
161					K102	1C	12,25	CB04	B	13(4)	
162					CB04	B	(4)	K02	1C	12,25	
163					K02	1A	23	J04	18	3	
164					J04	17	3	TB02	13	12	
165					FL16	ME	5	TB02	13	12	△13
166					C33	ME	5,	XF02	B	16	△13
167					XF02	T	16	C06	P	7(6)	
168					C06	P	(6)	XF102	T	16	
169					XF102	B	16	C133	ME	5,	△13
170	▽	▽	▽		FL116	ME	5,	TB02	14	12	△13
171	10	16	4		TB02	14	12	J04	35	3	

FORM AA 1669

CONTROL DATA

MINNEAPOLIS, MINNESOTA

TITLE

WIRE LISTING

POWER SUPPLY ASSY

WL

DOCUMENT NO. 40019800 REV. X

SHEET 11 OF

CONDUCTOR IDENT.	FIND NO.	GAUGE (REF.)	COLOR (REF.)	LENGTH (APPROX.)	ORIGIN		ACCESS. FIND NO.	DESTINATION		ACCESS. FIND NO.	REMARKS
172	10	16	4		J04	29	3	K102	3A	25	
173	〃	〃	〃		K102	3C	12,25	CB05	B	13 (8)	
174					CB05	B	(9)	K02	3C	12,25	
175					K02	3A	25	J04	28	3	
176					J04	30	3	TB02	12	12	
177					FL115	ME	5	TB02	12	12	△13
178					C152	ME	5	CB106	B	2	△13
179					CB107	B	2	K102	2C	12,25	
180					K102	2A	23	J04	14	3	
181					J04	13	3	K02	2A	23	
182					K02	2C	12,25	CB07	B	2	
183					CB04	T	2	C04	P	2	
184					C08	N	2	CB05	T	2	
185					CB05	B	(8)	J04	11	3	
186					J04	3	3	TB02	5	12	
187					TB02	5	12	J04	2	3	
188					J04	1	3	TB02	6	12	
189	〃	〃	〃		TB02	7	12	XF01	B	16	
190	10	16	4		XF01	T	16	C03	P	2	

CONTROL DATA

MINNEAPOLIS, MINNESOTA

TITLE

WIRE LISTING

POWER SUPPLY ASSY

WL

DOCUMENT NO. 40019800 REV. X

SHEET 12 OF

CONDUCTOR IDENT.	FIND NO.	GAUGE (REF.)	COLOR (REF.)	LENGTH (APPROX.)	ORIGIN		ACCESS. FIND NO.	DESTINATION		ACCESS. FIND NO.	REMARKS
191	10	16	4		TB02	3	12	TB04	2	16	
192	10	16	〃		CB04	B	(4)	J04	12	3	
193	21	20			J04	33	4	K101	B3	15,24	
194	〃	〃			TB02	7	14 (12)	J04	48	4	
195					J04	46	4	TB09	11	5	
196					TB09	5	5	J04	45	4	
197					J04	43	4	S07	B1	11,25	
198					S07	B3	11,25	J04	42	4	
199					J04	41	4	S07	C1	11,25	
200					S07	C3	11,25	J04	40	4	
201					J04	39	4	K05	L8	15,24	
202					K05	K2	15,24	TB02	2	11	
203					TB02	2	11	K105	K2	15,24	
204					K105	L8	15,24	J04	54	4	
205					J04	55	4	S107	C3	11,25	
206					S107	C1	11,25	J04	56	4	
207					J04	57	4	S107	B3	11,25	
208	〃	〃	〃		S107	B1	11,25	J04	58	4	
209	21	20	4		J04	65	4	S107	C2	12 (47) 25	

FORM AA1659

CONTROL DATA
MINNEAPOLIS, MINNESOTA

TITLE
WIRE LISTING
POWER SUPPLY ASSY

WL | DOCUMENT NO. 40019800 | REV. K | SHEET 13 OF

CONDUCTOR IDENT.	FIND NO.	GAUGE (REF.)	COLOR (REF.)	LENGTH (APPROX.)	ORIGIN		ACCESS. FIND NO.	DESTINATION		ACCESS. FIND NO.	REMARKS
210	21	20	4		S107	B2	25 12 (18)	S107	C2	(17)	
211					S107	B2	(18)	K101	L3	15,24	
212					K101	L2	15,24	J04	64	4	
213					J04	62	4	TB109	11	5	
214					TB109	5	5	J04	60	4	
215					J04	52	4	TB02	7	(12)	
216					TB02	7	14	J04	37	4	
217					J04	53	4	J04	66	3 (14)	
218					J04	66	(14)	K105	L9	15,24	
219					J04	51	4	TB02	5	11	
220					TB02	5	11	J04	36	4	
221					J04	26	4	TB02	3	11	
222					TB02	3	11	J04	16	4	
223					J04	24	4	K01	R3	15,24	
224					K01	R2	15,24	S02	B2	25,11	
225					S02	B3	25,11	TB02	9	11	
226											
227					K03	1	15,24	TB02	9	11	
228	21	20	4		TB02	9	11	K05	1	15,24	

CONTROL DATA
MINNEAPOLIS, MINNESOTA

TITLE
WIRE LISTING
POWER SUPPLY ASSY

WL | DOCUMENT NO. 40019800 | REV. K | SHEET 14 OF

CONDUCTOR IDENT.	FIND NO.	GAUGE (REF.)	COLOR (REF.)	LENGTH (APPROX.)	ORIGIN		ACCESS. FIND NO.	DESTINATION		ACCESS. FIND NO.	REMARKS
229	21	20	4		K05	R3	15,24	K02	L2	14 (15)	
230					K02	L2	(15)	TB04	8	16	
231					TB04	8	16	K01	L6	15,24	
232					K01	L5	15,24	TB02	2	14 (16)	
233					TB02	2	(16)	K101	L5	15,24	
234					K101	L6	15,24	K102	L2	14 (17)	
235					K102	L2	(17)	TB04	22	16	
236					TB04	22	16	K105	R3	15,24	
237					K105	R5	15,24	TB02	4	14 (18)	
238					TB02	4	(18)	SSW104	4	11	
239					SSW103	4	14 (19)	SSW102	4	14 (20)	
240					SSW102	4	(20)	SSW101	4	11	
241					SSW103	4	(19)	TB02	4	11	
242					TB02	4	11	SSW04	4	11	
243					SSW04	3	11	K04	L3	15,24	
244					K04	L2	15,24	TB02	9	11	
245					TB02	10	11	S102	B3	11,25	
246					S102	A2	25 12 (20)	TB04	21	16	
247	21	20	4		TB04	7	16	S02	A2	12 25 (16)	

FORM AA1609

CONTROL DATA
MINNEAPOLIS, MINNESOTA

TITLE
WIRE LISTING
POWER SUPPLY ASSY

WL | DOCUMENT NO. 40019800 | REV. K | SHEET 15 OF

CONDUCTOR IDENT.	FIND NO.	GAUGE (REF.)	COLOR (REF.)	LENGTH (APPROX.)	ORIGIN		ACCESS FIND NO.	DESTINATION		ACCESS. FIND NO.	REMARKS
248	21	20	4		S02	A3	11,25	CB07	3D	5	
249	〃	〃	〃		S02	A2	(46)	K02	L1	11	
250	〃	〃	〃		K102	L1	11	S102	A2	(50)	
251	21	20	4		S102	A3	11,25	CB107	3D	5	
252											
253	21	20	4		TB02	7	12 (21)	CB02	5B	5	
254	〃	〃	〃		CB02	3D	5	CB04	5B	5	
255					CB04	3D	5	CB05	5B	5	
256					CB05	3D	5	CB107	5B	5	
257					DS109	B	8	TB02	12	11	
258					TB02	14	11	DS106	B	8	
259					DS06	B	8	TB02	13	11	
260					TB02	11	11	DS09	B	8	
261					CB07	5B	5	CB05	3D	5	
262					TB02	4	11	SSW03	4	14 (22)	
263					SSW03	4	(22)	SSW02	4	14 (23)	
264					SSW02	4	(23)	SSW01	4	11	
265	〃	〃	〃		SSW01	3	14 (24)	SSW02	3	14 (25)	
266	21	20	4		SSW02	3	(25)	SSW03	3	14 (26)	

CONTROL DATA
MINNEAPOLIS, MINNESOTA

TITLE
WIRE LISTING
POWER SUPPLY ASSY

WL | DOCUMENT NO. 40019800 | REV. K | SHEET 16 OF

CONDUCTOR IDENT.	FIND NO.	GAUGE (REF.)	COLOR (REF.)	LENGTH (APPROX.)	ORIGIN		ACCESS FIND NO.	DESTINATION		ACCESS. FIND NO.	REMARKS
267	21	20	4		SSW03	3	(26)	K03	L2	15,24	
268					K04	1	15,24	SSW01	3	(24)	
269					SSW101	3	14 (27)	SSW102	3	14 (28)	
270					SSW102	3	(28)	SSW103	3	14 (29)	
271					SSW103	3	(29)	K103	L3	15,24	
272					K103	L2	15,24	TB02	10	11	
273					TB02	10	11	K103	1	15,24	
274					K105	1	15,24	TB02	10	11	
275					TB02	10	11	K104	L2	15,24	
276					K104	1	15,24	SSW101	3	(27)	
277	〃	〃	〃		SSW104	3	11	K104	L3	15,24	
278	21	20	4		K101	R2	15,24	S102	B2	11,25	
279											
280	21	20	4		S07	B2	25 12 (45)	K01	L3	15,24	
281	17	24			K02	2A	11	DS05	B	8	
282	〃	〃			DS05	T	8	TB02	6	11 (30)	
283					TB02	6	(30)	DS105	T	8	
284	〃	〃	〃		DS105	B	8	K102	2A	11	
285	17	24	4		K102	1A	11	DS107	B	8	

FORM AA1669

CONTROL DATA
MINNEAPOLIS, MINNESOTA

TITLE
WIRE LISTING
POWER SUPPLY ASSY

WL | DOCUMENT NO. 40019800 | REV. K | SHEET 17 OF

CONDUCTOR IDENT.	FIND NO.	GAUGE (REF.)	COLOR (REF.)	LENGTH (APPROX)	ORIGIN		ACCESS. FIND NO.	DESTINATION		ACCESS. FIND NO.	REMARKS
286	17	24	4		DS107	T	8	TB02	1	11 (31)	
287	"	"	"		TB02	1	(31)	DS07	T	8	
288					DS07	B	8	K02	1A	"	
289					K02	3A	"	DS08	B	8	
290					DS08	T	8	TB02	6	11 (32)	
291					TB02	6	(32)	DS108	T	8	
292					DS108	B	8	K102	3A	"	
293					K102	4C	11,25	TB02	8	11 (33)	
294					TB02	8	(33)	K05	L9	9,24	
295					K05	R1	9,24	K04	2	24,11 (34)	
296					K04	2	(34)	J04	27	6	
297					J04	25	6	TB02	8	11 (35)	
298					TB02	8	(35)	K101	1	9,24	
299					K101	2	24,9	TB02	4	11	
300					TB02	1	11 (36)	DS10	T	8	
301					DS10	B	8	TB02	7	(21)	
302					TB02	7	11 (40)	S01	A3	11,25	
303	"	"	"		S01	B2	11,25	TB02	2	11 (37)	
304	17	24	4		TB02	2	(37)	K05	R5	9,24	

CONTROL DATA
MINNEAPOLIS, MINNESOTA

TITLE
WIRE LISTING
POWER SUPPLY ASSY

WL | DOCUMENT NO. 40019800 | REV. K | SHEET 18OF

CONDUCTOR IDENT.	FIND NO.	GAUGE (REF.)	COLOR (REF.)	LENGTH (APPROX)	ORIGIN		ACCESS FIND NO.	DESTINATION		ACCESS. FIND NO.	REMARKS
305	17	24	4		K05	R6	9,24	K03	L5	9,24	
306	"	"	"		K03	L6	9,24	J04	8	6	
307					J04	7	6	K05	2	9,24	
308					K01	2	9,24	TB02	1	(36)	
309					TB02	1	11 (38)	S102	C2	11,25	
310					S102	C1	11,25	TB04	20	8	
311					TB04	20	8	J04	59	6	
312					J04	49	6	S01	A2	11,25 (43)	
313					S01	A2	(13)	K02	4C	25 11 (39)	
314					K02	4C	(39)	K01	1	9,24	
315					K01	L2	9,24	TB02	7	(40)	
316					TB02	6	11	K03	2	9,24	
317					J04	50	6	K02	4A	11	
318					K102	4A	11	S07	C2	25 11 (44)	
319					S07	C2	(41)	S07	B2	(45)	
320					S02	C1	11,25	TB04	6	8	
321					TB04	6	8	J04	44	6	
322	"	"	"		J04	22	6	DS111	B	8	
323	17	24	4		DS111	T	8	TB02	3	11 (4)	

FORM AA1669

CONTROL DATA
MINNEAPOLIS, MINNESOTA

TITLE
WIRE LISTING
POWER SUPPLY ASSY

WL | DOCUMENT NO. 40019800 | REV. K

SHEET 19 OF

CONDUCTOR IDENT.	FIND NO.	GAUGE (REF.)	COLOR (REF.)	LENGTH (APPROX)	ORIGIN		ACCESS. FIND NO.	DESTINATION		ACCESS. FIND NO.	REMARKS
324	17	24	4		TB02	3	(41)	DS11	T	8	
325					DS11	B	8	J04	10	6	
326					J04	15	6	K104	2	24,15 (42)	
327					K104	2	(42)	K105	R1	9,24	
328					K105	2	9,24	J04	5	6	
329					J04	4	6	K103	L6	9,24	
330					K103	L5	9,24	K105	R6	9,24	
331					K103	2	9,24	TB02	3	11	
332					TB02	1	(38)	S02	C2	11,25	
333					DS09	T	8	TB04	1	8	
334					TB04	15	8	DS109	T	8	
335					S01	B3	11,25	TB04	5	8	
336					TB04	5	8	TB04	19	8	
337					TB04	17	8	DS106	T	8	
338					DS06	T	8	TB04	3	8	
339					TB02	11	11	J04	67	6	
340	17	24	4		J04	70	6	TB02	12	11	
341	21	20	4		TB04	2	16	TB04	4	16	
342	21	20	4		TB04	4	16	TB04	16	16	

CONTROL DATA
MINNEAPOLIS, MINNESOTA

TITLE
WIRE LISTING
POWER SUPPLY ASSY

WL | DOCUMENT NO. 40019800 | REV. K

SHEET 20 OF

CONDUCTOR IDENT.	FIND NO.	GAUGE (REF.)	COLOR (REF.)	LENGTH (APPROX)	ORIGIN		ACCESS. FIND NO.	DESTINATION		ACCESS. FIND NO.	REMARKS
343	21	20	4		TB04	16	16	TB04	18	16	
344	21	20	4		TB09	21	5	S07	A3	25,11	
345	21	20	4		TB09	25	5	S07	A1	25,11	
346											
347	21	20	4		C25	OME	5	CR07	3D	5	△14
348	21	20	4		TB09	13	5	S07	A2	25,11	
349	21	20	4		TB109	21	5	S107	A3	25,11	
350	21	20	4		TB109	25	5	S107	A1	25,11	
351											
352	21	20	4		TB109	13	5	S107	A2	25,11	
353	21	20	4		C125	OME	5	CB107	3D	5	△14
354											
355											
356											
357											
358											
359											
360											
361											

FORM AA1669

CONTROL DATA | TITLE: WIRE LISTING — POWER SUPPLY ASSY | WL | DOCUMENT NO. 40019800 | REV K

MINNEAPOLIS, MINNESOTA | SHEET 21 OF

CONDUCTOR IDENT.	FIND NO.	GAUGE (REF.)	COLOR (REF.)	LENGTH (APPROX.)	ORIGIN		ACCESS FIND NO.	DESTINATION		ACCESS. FIND NO.	REMARKS
362	1	16		12	T06	1		T01	6	57	
363		12		12	T06	2		T01	14	56	
364		12		11	T06	3		TB06	3	53	
365		16		10	T06	4		T02	3	51	
366		12		11	T06	5		TB06	2	53	
367		12		12	T06	6		T01	16	56	
368		16		6	L02	1		C03	P	50	
369		16		6	L02	2		C04	P	50	
370		16		5	L03	1		C07	N	50	
371	1	16		5	L03	2		C08	N	50	
372	52	16	4	12	C01	P	50	TB06	1	51	
373	54	14	4	4	T08	5	58	TC8	4	53	
374											
375											
376											
377											
378											
379											
380											

CONTROL DATA | NORMANDALE DIVISION | CODE IDENT 19333 | SHEET 22 | WL | DOCUMENT NO. 40019800 | REV K

CONDUCTOR IDENT	FIND NO	GAUGE (REF)	COLOR (REF)	LENGTH (APPROX)	ORIGIN		ACCESS FIND NO	DESTINATION		ACCESS FIND NO	REMARKS
381	67	16	4	10	FL05	R	68	T01	1	68	
382	67	16	4	10	FL06	R	68	T01	2	68	
383	67	16	4	10	PANEL BASE	GRD	68	FRONT PANEL	GRD	68	15
384	5	24	4	11	TB09	24	7	FRONT PANEL	GRD	6	15
385	5	24	4	11	TB109	24	7	FRONT PANEL	GRD	6	15
386											
387											
388											
389											
390											
391											
392											
393											
394											
395											
396											
397											
398											
399											
400	11	20	4	7	TB09	13	12	C25	ME	12	15

AA 3163 PRINTED IN U.S.A.

[illegible]	NORMANDALE DIVISION	CODE IDENT 19333	SHEET 23	WL	DOCUMENT NO 40019800	REV K

CONDUCTOR IDENT.	FIND NO	GAUGE (REF.)	COLOR (REF.)	LENGTH (APPROX)	ORIGIN		ACCESS FIND NO.	DESTINATION		ACCESS FIND NO	REMARKS
401	11	20	4	4	TB109	13	12	C125	ME	12	15
402											
403											
404											
405											
406											
407											
408											
409											
410											
411											
412											
413											
414											
415	22	16	4	3	C21	OME	18	SSW01	1	19	15 14
416	22	16	4	3	C22	OME	18	SSW02	1	19	15 14
417	22	16	4	3	C23	OME	18	SSW03	1	19	15 14
418	22	16	4	3	C24	OME	18	SSW04		19	15 14
419	22	16	4	4	SSW01	2	19	FL11	COIL-B	18	15
420	22	16	4	4	SSW02	2	19	FL12	COIL-B	18	15

[illegible]	NORMANDALE DIVISION	CODE IDENT 19333	SHEET 24	WL	DOCUMENT NO 40019800	REV K

CONDUCTOR IDENT	FIND NO	GAUGE (REF.)	COLOR (REF.)	LENGTH (APPROX)	ORIGIN		ACCESS FIND NO	DESTINATION		ACCESS FIND NO	REMARKS
421	22	16	4	4	SSW03	2	19	FL13	COIL-B	18	15
422	21	20	4	4	SSW04	2	20	FL14	COIL-B	18	15
423	22	16	4	6	TB11	2	18	C24	ME	18	15 13
424	22	16	4	5	FL11	CAP-B	18	TB11	1	18	15
425	22	16	4	3	TB11	2	18	TB111	2	18	15
426	22	16	4	4	TB111	2	18	C124	ME	18	15 13
427	22	16	4	4	C121	OME	18	SSW101	1	19	15 14
428	22	16	4	4	C122	OME	18	SSW102	1	19	15 14
429	22	16	4	4	C123	OME	18	SSW103	1	19	15 14
430	22	16	4	4	C124	OME	18	SSW104	1	19	15 14
431	22	16	4	6	SSW101	2	19	FL111	COIL-T	18	15
432	22	16	4	6	SSW102	2	19	FL112	COIL-T	18	15
433	22	16	4	6	SSW103	2	19	FL113	COIL-T	18	15
434	21	20	4	6	SSW104	2	19	FL114	COIL-T	18	15
435	22	16	4	6	FL111	CAP-T	18	TB111	1	18	15
436											
437											
438											
439											
440	15	16	4	5	C32	OME	13	K05	L2	14,12	15 14

AA3183

PRINTED IN U.S.A.

CONTROL DATA	NORMANDALE DIVISION	CODE IDENT 19333	SHEET 25 OF 25	WL	DOCUMENT NO. 40019800	REV. K

CONDUCTOR IDENT.	FIND NO	GAUGE (REF.)	COLOR (REF.)	LENGTH (APPROX)	ORIGIN		ACCESS FIND NO	DESTINATION		ACCESS FIND NO	REMARKS
441	15	16	4	7	K05	L3	14,12	TB10	10	13	△15
442	15	16	4	4	TB10	9	13	FL15	OME	13	△15 △14
443	15	16	4	5	C33	OME	13	K05	L5	14,12	△15 △14
444	15	16	4	7	TB10	12	13	K05	L6	14,12	△15
445	15	16	4	4	TB10	11	13	FL16	OME	13	△15 △14
446	15	16	4	5	C132	OME	13	K105	L2	14,12	△15 △14
447	15	16	4	7	TB110	10	13	K105	L3	14,12	
448	15	16	4	4	TB110	9	13	FL115	OME	13	△15 △13
449	15	16	4	5	C133	OME	13	K105	L5	14,12	△15 △14
450	15	16	4	7	K105	L6	14,12	TB110	12	13	△15
451	15	16	4	4	TB110	11	13	FL116	OME	13	△15 △14
452	9	24	4	2	TB10	4	6	GRD		8	△15
453	9	24	4	2	TB110	4	6	GRD		8	△15

CONTROL DATA	NORMANDALE DIVISION	CODE IDENT 19333	SHEET 1 of 1	DN	DOCUMENT NO 40019800	REV. K

△1. COMPONENTS TO6, LO2 & LO3 USE EXISTING LEADS.

2. FOR FIND NO. REFERENCED IN CONDUCTORS 1 THRU 55 SEE PL 40017800; D.C. PANEL HARNESS.

3. FOR FIND NO. REFERENCED IN CONDUCTORS 77 THRU 144 SEE PL 41296100; A.C. HARNESS.

4. FOR FIND NO. REFERENCED IN CONDUCTORS 153 THRU 353 SEE PL 41294000; D.C. HARNESS.

5. FOR FIND NO. REFERENCED IN CONDUCTORS 362 THRU 373 SEE PL 40011800, 01; MISC. D.C. PANEL WIRING.

6. FOR FIND NO. REFERENCED IN CONDUCTORS 381 AND 383 SEE PL 40018600, 01; MISC. POWER SUPPLY WIRING.

7. A HEXAGON IN THE ACCESS FIND NO. COLUMN INDICATES THAT THE CONDUCTOR IS ONE OF SEVERAL (ALL WITH THE SAME NUMBER IN THE HEXAGON) GOING INTO THE SAME TERMINAL. THE NUMBER IN FRONT OF A HEXAGON IS THE TERMINAL FIND NO.

8. FOR FIND NO. REFERENCED IN CONDUCTORS 384 AND 385 SEE PL 70805100; D.C. AND START TERMINAL BOARD ASSY.

9. FOR FIND NO. REFERENCED IN CONDUCTORS 400 AND 401 SEE PL 70807500; SWITCH - SUPPRESSION, POWER SUPPLY.

10. FOR FIND NO. REFERENCED IN CONDUCTORS 415 THRU 435 SEE PL 41286300; A.C. PANEL ASSY.

11. FOR FIND NO. REFERENCED IN CONDUCTORS 440 THRU 451 SEE PL 70807900; D.C. RELAY PANEL ASSY.

12. FOR FIND NO. REFERENCED IN CONDUCTORS 452 THRU 453 SEE PL 70805400-01; D.C. RELAY TERMINAL BOARD ASSY.

△13. ME STANDS FOR CONNECTION NEAREST THE MOUNTED END.

△14. OME STANDS FOR CONNECTION OPPOSITE THE MOUNTED END.

△15. NOT IN HARNESS.

DWN	DM	12-67	CONTROL DATA	TITLE	PREFIX	DOCUMENT NO.	REV
CHKD	CM	12-67		WIRE LIST-POWER SUPPLY ASSY	WL	72994100	A
ENG	FWE	12-67	NORMANDALE DIVISION				
MFG			CODE IDENT	FIRST USED ON		SHEET	
APPR			19333	MULTIPLE DISK DRIVE		1 OF 27	

SHEET REVISION STATUS

REVISION RECORD

REV	ECO	DESCRIPTION	DRFT	DATE	APP
A	PE24747	DWG NO WAS 70713400	BR	11/10/70	TR

NOTES:

DN 72994100
DETACHED LISTS

CONTROL DATA | CODE IDENT 19333 | SHEET 2 | WL | DOCUMENT NO 72994100 | REV A

CONDUCTOR IDENT	FIND NO	GAUGE (REF.)	COLOR (REF.)	LENGTH (APPROX)	ORIGIN		ACCESS FIND NO	DESTINATION		ACCESS FIND NO	REMARKS
1	3	16	4		C14	L	4	T01	3	7 ⟨1⟩	
2	↑	↑	↑		T01	3	⟨1⟩	CR04	4	4, 15	
3					CR04	3	4,15	C05	N	9, ⟨2⟩	
4					C05	N	⟨2⟩	C09	N	11 ⟨3⟩	
5					C09	N	⟨3⟩	TB02	4	4	
6					TB02	2	4	C06	N	11 ⟨4⟩	
7					C06	N	⟨4⟩	R02	R	4, 15	
8					R02	L	4, 15	C06	P	9 ⟨5⟩	
9					C06	P	⟨5⟩	CR05	1	4, 15	
10					CR05	4	4, 15	T01	9	1	
11					T01	10	1	CR05	2	4, 15	
12					CR05	3	4, 15	C06	N	⟨4⟩	
13					C08	N	6	R04	L	10	
14					R04	R	10	C04	P	6	
15					T08	1	4, 15	T05	3	4	
16					T05	1	4	T01	8	7 ⟨6⟩	
17					T01	8	⟨6⟩	T03	1	4	
18					T03	3	4	T09	1	4	
19	↓	↓	↓		T09	2	4	T01	6	1	
20	3	16	4		T01	4	1	T09	3	4	

AA3183 PRINTED IN U.S.A.

CONTROLDATA

CODE IDENT 19333 | SHEET 3 | WL | DOCUMENT NO. 72994100 | REV. A

CONDUCTOR IDENT	FIND NO	GAUGE (REF)	COLOR (REF)	LENGTH (APPROX)	ORIGIN		ACCESS FIND NO	DESTINATION		ACCESS FIND NO	REMARKS
21	3	16	4		T09	4	4	CR04	2	4, 15	
22	↑	↑	↑		CR04	1	4, 15	C05	P	9 ⟨7⟩	
23					C05	P	⟨7⟩	C09	P	9 ⟨8⟩	
24					C09	P	⟨8⟩	R03	T	5, 12	
25					R03	B	5, 15	C09	N	⟨3⟩	
26					C02	N	6	R01	B	5, 12	
27					R01	T	5, 12	C02	P	6	
28					T05	4	4	T01	5	7 ⟨9⟩	
29					T01	5	⟨9⟩	T03	4	4	
30					T02	1	4	T01	8	7 ⟨10⟩	
31					T01	8	⟨10⟩	T04	1	4	
32					T04	3	4	T07	1	4	
33					T07	2	4	T01	7	7 ⟨11⟩	
34					T01	7	⟨11⟩	T08	2	4, 15	
35					T08	3	4	TB08	3	4	
36					TB07	2	4	T07	3	4, 15	
37					T07	4	41	C07	N	6	
38					T07	5	4	TB08	2	4	
39	↓	↓	↓		TB07	3	4	T08	6	4	
40	3	16	4		C14	R	4	T01	8	1	

CONTROLDATA

CODE IDENT 19333 | SHEET 4 | WL | DOCUMENT NO. 72994100 | REV. A

CONDUCTOR IDENT	FIND NO	GAUGE (REF)	COLOR (REF)	LENGTH (APPROX)	ORIGIN		ACCESS FIND NO	DESTINATION		ACCESS FIND NO	REMARKS
41	3	16	4		T01	5	7 ⟨12⟩	T02	4	4	
42	3	16	↑		T04	4	4	T01	5	⟨12⟩	
43	2	14			TB07	1	8	T01	13	7	
44	↑	↑			T01	12	7	C07	P	9	
45					C07	P	9	C03	N	9	
46					C03	P	9	T08	5	8	
47					TB08	1	8	T01	11	7	
48					T01	15	7	C01	N	9	
49					C01	N	9	C02	N	9	
50					C02	P	9	L01	2	8	
51					L01	1	8	C01	P	9	
52					C04	N	9	C08	P	9	
53					C08	P	9	C07	P	9	
54	↓	↓	↓		C08	P	9	TB02	3	B	
55	2	14	4		TB02	1	8	C02	N	9	
56											
57											
58											
59											
60											

AA3183 PRINTED IN U.S.A.

CONTROL DATA

CODE IDENT	SHEET	WL	DOCUMENT NO	REV.
19333	5		7299410O	A

CONDUCTOR IDENT	FIND NO	GAUGE (REF.)	COLOR (REF.)	LENGTH (APPROX)	ORIGIN		ACCESS FIND NO	DESTINATION		ACCESS FIND NO	REMARKS
61											
62											
63											
64											
65											
66											
67											
68											
69											
70											
71											
72											
73											
74											
75											
76											
77	4	16	4		CB03	AT	8	CB02	AT	9 ⟨1⟩	
78	↕	↕	↕		CB02	AT	⟨1⟩	CB103	AT	8	
79	↕	↕	↕		CB03	AB	8	C21	MK	5	△13
80	4	16	4		TB11	1	15	J03	1	13	

CONTROL DATA

CODE IDENT	SHEET	WL	DOCUMENT NO	REV
19333	6		7299410O	A

CONDUCTOR IDENT	FIND NO	GAUGE (REF.)	COLOR (REF.)	LENGTH (APPROX)	ORIGIN		ACCESS FIND NO	DESTINATION		ACCESS FIND NO	REMARKS
81	4	16	4		J03	2	13	FL12	CAP B	5	
82	↕	↕	↕		C22	ME	5	CB03	BB	8	△13
83					CB103	BT	8	CB02	BT	9 ⟨3⟩	
84					CB02	BT	⟨3⟩	CB03	BT	8	
85					CB02	AB	8	J02	1	13	
86					J02	2	13	CB02	BB	8	
87					CB03	CT	8	CB02	CT	12 ⟨4⟩	
88					CB02	CT	⟨4⟩	CB103	CT	8	
89					CB03	CB	8	C23	ME	5	△13
90					FL13	CAP B	5	J03	3	13	
91					J02	3	13	CB02	CB	8	
92	↕	↕	↕		CB02	AT	9 ⟨5⟩	XF03	T	10	
93	4	16	4		XF03	B	10	TB11	2	15	
94											
95	4	16	4		C123	ME	5	CB103	CB	8	△13
96	↕	↕			CB103	BB	8	C122	ME	5	△13
97					FL113	CAP T	5	J103	3	13	
98					J103	2	13	FL112	CAP T	5	
99	↕	↕	↕		TB11	4	15	J103	1	13	
100	4	16	4		C121	ME	5	CB103	AB	8	△13

AA3183

PRINTED IN U.S.A.

CONTROL DATA

CODE IDENT	SHEET	WL	DOCUMENT NO.	REV.
19333	7	WL	72994100	A

CONDUCTOR IDENT.	FIND NO.	GAUGE (REF.)	COLOR (REF.)	LENGTH (APPROX.)	ORIGIN		ACCESS FIND NO.	DESTINATION		ACCESS FIND NO.	REMARKS
101	4	16	4		XF04	B	10	T01	1	22	
102	↑	↑	↑		T01	2	22	XF05	B	10	
103	↓	↓			XF05	T	10	CB02	CT	⟨4⟩	
104	4	16			CB02	BT	9 ⟨9⟩	XF04	T	10	
105	3	20			TB03	11	23	TB03	9	10 ⟨56⟩	
106	↑	↑			TB03	9	10 ⟨56⟩	TB03	7	10 ⟨57⟩	
107					TB03	1	23	CB02	AT	⟨5⟩	
108					CB02	BT	⟨9⟩	TB03	3	23	
109					TB03	5	23	CB02	CT	8 ⟨10⟩	
110					CB02	CT	⟨10⟩	DS04	B	23	
111					DS04	T	23	TB01	1	11	
112					TB01	1	11	P106	2	14	
113					P106	1	14	TB11	4	15	
114					FL114	CAP T	5	J103	6	14	
115					J103	7	14	TB01	2	11	
116					TB01	2	11	J03	7	14	
117					J03	6	14	FL14	CAP B	5	
118					TB11	2	15	J05	1	14	
119	↓	↓	↓		J05	2	14	TB01	1	11	
120	3	20	4		TB01	1	11	TB03	7	23 ⟨57⟩	

CONTROL DATA

CODE IDENT	SHEET	WL	DOCUMENT NO.	REV.
19333	8	WL	72994100	A

CONDUCTOR IDENT.	FIND NO.	GAUGE (REF.)	COLOR (REF.)	LENGTH (APPROX.)	ORIGIN		ACCESS FIND NO.	DESTINATION		ACCESS FIND NO.	REMARKS
121	3	20	4		J03	8	14	TB01	4	11	
122	↑	↑	↑		TB01	4	11	J103	8	14	
123					J103	5	14	TB01	3	11	
124					TB01	3	11	J05	3	14	
125					J05	4	14	TB11	3	15	
126					TB11	3	15	J05	7	14	
127					J05	8	14	TB01	2	11	
128					TB01	2	11	J05	5	14	
129					J05	6	14	TB01	4	11	
130					TB01	4	11	J05	9	14	
131					J103	4	14	TB01	3	11	
132					TB01	3	11	J03	5	14	
133					J03	4	14	TB01	3	11	
134					TB01	1	11	P06	2	14	
135					P06	1	14	TB11	1	15	
136					J02	4	14	TB01	3	11	
137					TB01	4	11	J02	5	14	
138					TB03	2	23	TB03	8	23	
139	↓	↓	↓		TB03	10	23	TB03	4	23	
140	3	20	4		TB03	6	23	TB03	12	23	

AA3183 PRINTED IN U.S.A.

CONTROL DATA

CODE IDENT 19333 | SHEET 9 | WL | DOCUMENT NO. 72994100 | REV. A

CONDUCTOR IDENT.	FIND NO.	GAUGE (REF.)	COLOR (REF.)	LENGTH (APPROX)	ORIGIN		ACCESS FIND NO	DESTINATION		ACCESS FIND NO	REMARKS
141	3	20	4		B01	L	17, 18	TB11	2	15	
142	↑	↑	↑		TB11	3	15	B02	L	17, 18	
143	↓	↓	↓		B02	R	17, 18	TB01	2	11	
144	3	20	4		TB01	2	11	B01	R	17, 18	
145	4	16	4		TB11	2	15	C24	ME	5	△13
146	↑	↑	↑		FL11	CAP B	5	TB11	1	15	
147	↓	↓	↓		TB11	3	15	C124	ME	5	△13
148	4	16	4		FL111	CAP T	5	TB11	4	15	
149											
150											
151											
152											
153	10	16	4		CB07	T	2	C02	P	7 ⟨1⟩	
154	↑	↑	↑		C02	P	⟨1⟩	CB107	T	2	
155					CB106	T	2	C09	P	7 ⟨2⟩	
156					C09	P	⟨2⟩	CB06	T	2	
157					CB06	B	2	C32	ME	5	△13
158					FL15	ME	5	TB02	11	12	△13
159	↓	↓	↓		TB02	11	12	J04	21	3	
160	10	16	4		J04	20	3	K102-1	OUT	23	

CONTROL DATA

CODE IDENT 19333 | SHEET 10 | WL | DOCUMENT NO. 72994100 | REV. A

CONDUCTOR IDENT	FIND NO.	GAUGE (REF.)	COLOR (REF.)	LENGTH (APPROX)	ORIGIN		ACCESS FIND NO	DESTINATION		ACCESS FIND NO	REMARKS
161											
162											
163	10	16	4		K02-1	OUT	23	J04	18	3	
164	↑	↑	↑		J04	17	3	TB02	13	12	
165					FL16	ME	5	TB02	13	12	△13
166					C33	ME	5	XF02	B	16	△13
167					XF02	T	16	K06	6	5 ⟨6⟩	
168					K06	6	⟨6⟩	XF102	T	16	
169					XF102	B	16	C133	ME	5	△13
170					FL116	ME	5	TB02	14	12	△13
171	↓	↓	↓		TB02	14	12	J04	35	3	
172	10	16	4		J04	29	3	K102-3	OUT	23	
173											
174											
175	10	16	4		K02-3	OUT	23	J04	28	3	
176	↑	↑	↑		J04	30	3	TB02	12	12	
177					FL115	ME	5	TB02	12	12	△13
178					C132	ME	5	CB106	B	2	△13
179	↓	↓	↓		CB107	B	2	K102-2	IN	14,25	
180	10	16	4		K102-2	OUT	23,	J04	14	3	

AA 2183

PRINTED IN U.S.A.

CONTROL DATA

CODE IDENT 19333 | SHEET 11 | WL | DOCUMENT NO. 72994100 | REV. A

CONDUCTOR IDENT	FIND NO	GAUGE (REF)	COLOR (REF.)	LENGTH (APPROX)	ORIGIN		ACCESS FIND NO	DESTINATION		ACCESS FIND NO	REMARKS
181	10	16	4		J04	13	3	K02-2	OUT	23	
182	↑	↑	↑		K02-2	IN	14,25	CB07	B	2	
183	↓	↓	↓		CB04	T	2	C04	P	2	
184	10	16	4		C08	N	2	CB05	T	2	
185											
186	10	16	4		J04	3	3	TB02	5	12	
187	↑	↑	↑		TB02	5	12	J04	2	3	
188	|	|	|		J04	1	3	TB02	6	12	
189	|	|	|		TB02	7	12	XF01	B	16	
190	↓	↓	↓		XF01	T	16	C03	P	2	
191	10	16	4		TB02	3	12	TB04	2	16	
192											
193	21	20	4		J04	33	4	K101	R3	15, 24	
194	↑	↑	↑		TB02	7	14 ⟨12⟩	J04	48	4	
195	|	|	|		J04	46	4	TB09	8	8	
196	|	|	|		TB09	9	8	J04	45	4	
197	|	|	|		J04	43	4	S07	B1	11, 25	
198	|	|	|		S07	B3	11, 25	J04	42	4	
199	↓	↓	↓		J04	41	4	S07	C1	11, 25	
200	21	20	4		S07	C3	11, 25	J04	40	4	

CONTROL DATA

CODE IDENT 19333 | SHEET 12 | WL | DOCUMENT NO. 72994100 | REV. A

CONDUCTOR IDENT	FIND NO	GAUGE (REF)	COLOR (REF.)	LENGTH (APPROX)	ORIGIN		ACCESS FIND NO	DESTINATION		ACCESS FIND NO	REMARKS
201	21	20	4		J04	39	4	K05	L8	15,24	
202	↑	↑	↑		K05	R2	15, 24	TB02	7	11	
203	|	|	|		TB02	2	11	K105	R2	15, 24	
204	|	|	|		K105	L8	15, 24	J04	54	4	
205	|	|	|		J04	55	4	S107	C3	11, 25	
206	|	|	|		S107	C1	11, 25	J04	56	4	
207	|	|	|		J04	57	4	S107	B3	11, 25	
208	|	|	|		S107	B1	11, 25	J04	58	4	
209	|	|	|		J04	65	4	S107	C2	12 ⟨47⟩ 25	
210	|	|	|		S107	B2	12 25 ⟨48⟩	S107	C2	⟨47⟩	
211	|	|	|		S107	B2	⟨48⟩	K101	L3	15, 24	
212	|	|	|		K101	L2	15, 24	J04	64	4	
213	|	|	|		J04	62	4	TB09	6	8	
214	|	|	|		TB09	7	8	J04	60	4	
215	|	|	|		J04	52	4	TB02	7	⟨12⟩	
216	|	|	|		TB02	7	14	J04	37	4	
217	|	|	|		J04	53	4	J04	66	3 ⟨14⟩	
218	|	|	|		J04	66	⟨14⟩	K105	L9	15, 24	
219	↓	↓	↓		J04	51	4	TB02	5	11	
220	21	20	4		TB02	5	11	J04	36	4	

AA3183

PRINTED IN U.S.A.

CONTROL DATA | CODE IDENT 19333 | SHEET 13 | WL | DOCUMENT NO. 7299410O | REV A

CONDUCTOR IDENT	FIND NO.	GAUGE (REF.)	COLOR (REF.)	LENGTH (APPROX)	ORIGIN		ACCESS FIND NO.	DESTINATION		ACCESS FIND NO.	REMARKS
221	21	20	4		J04	26	4	TB02	3	11	
222	↑	↑	↑		TB02	3	11	J04	16	4	
223					J04	24	4	K01	R3	15, 24	
224	↓	↓	↓		K01	R2	15, 24	S02	B2	11,25	
225	21	20	4		S02	B3	11, 25	TB02	9	11	
226											
227	21	20	4		K03	1	15, 24	TB02	9	11	
228	↑	↑	↑		TB02	9	11	K05	1	15, 24	
229					K05	R3	15, 24	K02-4	COIL B	25 14 (15)	
230					K02-4	COIL B	(15)	TB04	8	8	
231					TB04	8	8	K01	L6	15, 24	
232					K01	L5	15, 24	TB02	2	14 (16)	
233					TB02	2	(16)	K101	L6	15, 24	
234					K101	L6	15, 24	K102-4	COIL B	25 14 (17)	
235					K102-4	COIL B	(17)	TB04	22	8	
236					TB04	22	8	K105	R3	15, 24	
237					K105	R5	15, 24	TB02	4	14 (18)	
238					TB02	4	(18)	SSW104	4	11	
239	↓	↓	↓		SSW103	4	14 (19)	SSW102	4	14 (20)	
240	21	20	4		SSW102	4	(20)	SSW101	4	11	

CONTROL DATA | CODE IDENT 19333 | SHEET 14 | WL | DOCUMENT NO. 7299410O | REV A

CONDUCTOR IDENT	FIND NO.	GAUGE (REF.)	COLOR (REF.)	LENGTH (APPROX)	ORIGIN		ACCESS FIND NO.	DESTINATION		ACCESS FIND NO.	REMARKS
241	21	20	4		SSW103	4	(19)	TB02	4	11	
242	↑	↑	↑		TB02	4	11	SSW04	4	11	
243					SSW04	3	11	K04	L3	15, 24	
244					K04	L2	15,24	TB02	9	11	
245					TB02	10	11	S102	B3	11, 25	
246	↓	↓	↓		TB04	21	8	TB09	10	8	
247	21	20	4		TB04	7	(46) 16	TB09	18	8	
248											
249	21	20	4		TB04	7	16 (46)	K02-1	COIL T	25,11	
250	21	20	4		K102-1	COIL T	25,11	TB04	21	(50) 16	
251											
252											
253	21	20	4		TB02	7	12 (21)	CB02	58	5	
254	↑	↑	↑		CB02	30	5	CB04	58	5	
255					CB04	30	5	CB05	58	5	
256					CB05	30	5	CB107	58	5	
257					DS109	B	8	TB02	12	11	
258					TB02	14	11	DS106	B	8	
259	↓	↓	↓		DS06	B	8	TB02	13	11	
260	21	20	4		TB02	11	11	DS09	B	8	

AA3183 PRINTED IN U.S.A.

CONTROL DATA

CODE IDENT 19333 | SHEET 15 | WL | DOCUMENT NO. 7299100 | REV. A

CONDUCTOR IDENT	FIND NO	GAUGE (REF.)	COLOR (REF.)	LENGTH (APPROX)	ORIGIN		ACCESS FIND NO	DESTINATION		ACCESS FIND NO	REMARKS
261	21	20	4		CB07	5B	5	CB05	3D	5	
262	↑	↑	↑		TB02	4	11	SSW03	4	14 ⟨22⟩	
263					SSW03	4	⟨22⟩	SSW02	4	14 ⟨23⟩	
264					SSW02	4	⟨23⟩	SSW01	4	11	
265	↓	↓	↓		SSW01	3	14 ⟨24⟩	SSW02	3	14 ⟨25⟩	
266	21	20	4		SSW02	3	⟨25⟩	SSW03	3	14 ⟨26⟩	
267											
268	21	20	4		K04	1	15, 24	SSW01	3	⟨24⟩	
269	↑	↑	↑		SSW101	3	14 ⟨27⟩	SSW102	3	14 ⟨28⟩	
270					SSW102	3	⟨28⟩	SSW103	3	14 ⟨29⟩	
271					SSW03	3	⟨26⟩	TB02	9	11	
272					SSW103	3	⟨29⟩	TB02	10	11	
273					TB02	10	11	K103	1	15, 24	
274					K105	1	15, 24	TB02	10	11	
275					TB02	10	11	K104	L2	15, 24	
276					K104	1	15, 24	SSW101	3	⟨27⟩	
277	↓	↓	↓		SSW104	3	11	K104	L3	15, 24	
278	21	20	4		K101	R2	15, 24	S102	B2	11, 25	
279											
280	21	20	4		S07	B2	12 25 ⟨45⟩	K01	L3	15 24	

CONTROL DATA

CODE IDENT 19333 | SHEET 16 | WL | DOCUMENT NO. 7299100 | REV. A

CONDUCTOR IDENT	FIND NO	GAUGE (REF.)	COLOR (REF.)	LENGTH (APPROX)	ORIGIN		ACCESS FIND NO	DESTINATION		ACCESS FIND NO	REMARKS
281	17	24	4		K02-2	OUT	25,11	DS05	B	8	
282	↑	↑	↑		DS05	T	8	TB02	6	11 ⟨30⟩	
283					TH02	6	⟨30⟩	DS105	T	8	
284					DS105	B	8	K102-2	OUT	25,11	
285					K102-1	OUT	25,11	DS107	B	8	
286					DS107	T	8	TH02	1	11 ⟨31⟩	
287					TH02	1	⟨31⟩	DS07	T	8	
288					DS07	B	8	K02-1	OUT	25,11	
289					K02-3	OUT	25,11	DS08	B	8	
290					DS08	T	8	TB02	6	11 ⟨32⟩	
291					TB02	6	⟨32⟩	DS108	T	8	
292					DS108	B	8	K102-3	OUT	25,11	
293					K102-4	IN	11, 25	TB02	8	11 ⟨33⟩	
294					TB02	8	⟨33⟩	K05	L9	9, 24	
295					K05	R1	9, 24	K04	2	15 24 ⟨34⟩	
296					K04	2	⟨34⟩	J04	27	6	
297					J04	25	6	TB02	8	11 ⟨35⟩	
298					TB02	8	⟨35⟩	K101	1	9, 24	
299	↓	↓	↓		K101	2	24, 9	TB02	4	11	
300	17	24	4		TB02	1	11 ⟨36⟩	DS10	T	8	

AA3183

PRINTED IN U.S.A.

CONTROL DATA | CODE IDENT 19333 | SHEET 17 | WL | DOCUMENT NO 72994100 | REV A

CONDUCTOR IDENT	FIND NO	GAUGE (REF.)	COLOR (REF.)	LENGTH (APPROX)	ORIGIN		ACCESS FIND NO	DESTINATION		ACCESS FIND NO	REMARKS
301	17	24	4		DS10	B	8	TB02	7	⟨21⟩	
302					TB02	7	11 ⟨40⟩	S01	A3	11, 25	
303					S01	B2	11, 25	TB02	2	11 ⟨37⟩	
304					TB02	2	⟨37⟩	K05	R5	9, 24	
305					K05	R6	9, 24	K03	L5	9, 24	
306					K03	L6	9,24	J04	8	6	
307					J04	7	6	K05	2	9, 24	
308					K01	2	9, 24	TB02	1	⟨36⟩	
309					TB02	1	11 ⟨38⟩	S102	C2	11, 25	
310					TB04	20	8	TB09	17	8	
311					TB04	20	8	J04	59	6	
312					J04	49	6	S01	A2	11 25 ⟨43⟩	
313					S01	A2	⟨43⟩	K02-4	IN	11 25 ⟨39⟩	
314					K02-4	IN	⟨39⟩	K01	1	9, 24	
315					K01	L2	9, 24	TB02	7	⟨40⟩	
316					TB02	6	11	K03	2	9, 24	
317					J04	50	6	K02-4	OUT	25,11	
318					K102-4	OUT	25,11	S07	C2	11 25 ⟨41⟩	
319					S07	C2	⟨44⟩	S07	B2	⟨45⟩	
320	17	24	4		TB04	6	8	TB09	16	8	

CONTROL DATA | CODE IDENT 19333 | SHEET 18 | WL | DOCUMENT NO 72994100 | REV A

CONDUCTOR IDENT.	FIND NO	GAUGE (REF.)	COLOR (REF.)	LENGTH (APPROX)	ORIGIN		ACCESS FIND NO	DESTINATION		ACCESS FIND NO	REMARKS
321	17	24	4		TB04	6	8	J04	44	6	
322					J04	22	6	DS111	B	8	
323					DS111	T	8	TB02	3	11 ⟨41⟩	
324					TB02	3	⟨41⟩	DS11	T	8	
325					DS11	B	8	J04	10	6	
326					J04	15	6	K104	2	15 24 ⟨42⟩	
327					K104	2	⟨42⟩	K105	R1	9, 24	
328					K105	2	9, 24	J04	5	6	
329					J04	4	6	K103	L6	9, 24	
330					K103	L5	9, 24	K105	R6	9, 24	
331					K103	2	9, 24	TB02	3	11	
332					TB02	1	⟨38⟩	S02	C2	11, 25	
333					DS09	T	8	TB04	1	8	
334					TB04	15	8	DS109	T	8	
335					TB04	5	8	TB09	15	8	
336					TB04	5	8	TB04	19	8	
337					TB04	17	8	DS106	T	8	
338					DS06	T	8	TB04	3	8	
339					TB02	11	11	J04	67	6	
340	17	24	4		J04	70	6	TB02	12	11	

AA3183 PRINTED IN U.S.A.

CONTROL DATA | CODE IDENT 19333 | SHEET 19 | WL | DOCUMENT NO. 72994100 | REV. A

CONDUCTOR IDENT.	FIND NO.	GAUGE (REF.)	COLOR (REF.)	LENGTH (APPROX)	ORIGIN		ACCESS FIND NO.	DESTINATION		ACCESS FIND NO.	REMARKS
341	21	20	4		TB04	2	B	TB04	4	B	
342	21	20	4		TB04	4	B	TB04	16	B	
343	21	20	4		TB04	16	B	TB04	18	B	
344											
345											
346											
347	21	20	4		C31	ME	5	CB07	3D	5	△14
348											
349											
350											
351											
352											
353	21	20	4		C131	ME	5	CB107	3D	5	△14
354	10	16	4		J04	12	3	FL19	OME	5	
355	10	16	4		J04	11	3	FL119	OME	5	
356											
357											
358											
359											
360											

CONTROL DATA | CODE IDENT 19333 | SHEET 20 | WL | DOCUMENT NO. 72994100 | REV. A

CONDUCTOR IDENT.	FIND NO.	GAUGE (REF.)	COLOR (REF.)	LENGTH (APPROX)	ORIGIN		ACCESS FIND NO.	DESTINATION		ACCESS FIND NO.	REMARKS
361											
362	△1	16		12	T06	1		T01	6	57	
363		12		12	T06	2	1	T01	14	56	
364		12		11	T06	3		TB06	3	53	
365		16		10	T06	4		T02	3	51	
366		12		11	T06	5		TB06	2	53	
367		12		12	T06	6		T01	16	56	
368		16		6	L02	1		C03	P	50	
369		16		6	L02	2		C04	P	50	
370		16		5	L03	1		C07	N	50	
371	△1	16		5	L03	2		C08	N	50	
372	52	16	4	12	C01	P	50	TB06	1	51	
373	54	14	4	4	T08	5	58	T08	4	53	
374											
375											
376											
377											
378											
379											
380											

AA3183 PRINTED IN U.S.A.

CONTROL DATA

		CODE IDENT	SHEET	WL	DOCUMENT NO	REV
		19333	21	WL	72994100	A

CONDUCTOR IDENT.	FIND NO.	GAUGE (REF.)	COLOR (REF.)	LENGTH (APPROX)	ORIGIN		ACCESS FIND NO.	DESTINATION		ACCESS FIND NO	REMARKS
381											
382											
383	67	16	4	10	PANEL BASE	GRD	68	FRONT PANEL	GRD	68	15
384	73	20	4	16	T01	1	90	K06	7	75	15
385	73	20	4	16	T01	2	90	K06	2	75	15
386	67	16	4	12	C06	P	89	K06	1	75	15
387											
388											
389											
390											
391											
392											
393											
394											
395											
396											
397											
398											
399											
400	40	20	4	7	TB09	19	42	C31	OME	75	14 15

CONTROL DATA

		CODE IDENT	SHEET	WL	DOCUMENT NO	REV
		19333	22	WL	72994100	A

CONDUCTOR IDENT.	FIND NO	GAUGE (REF)	COLOR (REF.)	LENGTH (APPROX)	ORIGIN		ACCESS FIND NO	DESTINATION		ACCESS FIND NO	REMARKS
401	40	20	4	6	TB09	11	42	C131	OME		14 15
402	40	20	4	2	TB09	14	42	TB09	13	53 39	15
403	40	20	4	2	TB09	12	54 39	TB09	13	53	15
404	40	20	4	3	TB09	24	42	TB09	4	42	15
405	40	20	4	2	TB09	4	42	TB09	12	54	15
406	40	20	4	2.5	TB09	11	42	TB09	26	42	15
407	40	20	4	3.5	TB09	19	42	TB09	27	42	15
408	41	24	4	2.5	TB09	1	42	S01	83	43,44	
409											
410											
411											
412											
413											
414											
415	22	16	4	2	C21	OME	18	SSW01	1	19	13 14
416	▲	▲	▲	2	C22	OME	18	SSW02	1	19	13 14
417				2	C23	OME	18	SSW03	1	19	13 14
418				2	C24	OME	18	SSW04	1	19	13 14
419	▼	▼	▼	3	SSW01	2	19	FL11	COIL B	18	13
420	22	16	4	3	SSW02	2	19	FL12	COIL B	18	13

AA3183 PRINTED IN U.S.A.

CONTROL DATA | CODE IDENT 19333 | SHEET 23 | WL | DOCUMENT NO 72994100 | REV A

CONDUCTOR IDENT.	FIND NO.	GAUGE (REF.)	COLOR (REF.)	LENGTH (APPROX)	ORIGIN		ACCESS FIND NO.	DESTINATION		ACCESS FIND NO.	REMARKS
421	22	16	4	3	SSW03	2	19	FL13	COIL B	18	15
422	21	20	4	3	SSW04	2	20	FL14	COIL B	18	15
423											
424											
425											
426											
427	22	16	4	2	C121	OME	18	SSW101	1	19	15 14
428	↑	↑	↑	2	C122	OME	18	SSW102	1	19	15 14
429				2	C123	OME	18	SSW103	1	19	15 14
430				2	C124	OME	18	SSW104	1	19	15 14
431				8	SSW101	2	19	FL111	COIL T	18	15
432	↓	↓	↓	8	SSW102	2	19	FL112	COIL T	18	15
433	22	16	4	8	SSW103	2	19	FL113	COIL T	18	15
434	21	20	4	8	SSW104	2	19	FL114	COIL T	18	15
435											
436											
437											
438											
439											
440	15	16	4	5	C32	OME	13	K05	L2	14, 12	15 14

CONTROL DATA | CODE IDENT 19333 | SHEET 24 | WL | DOCUMENT NO 72994100 | REV A

CONDUCTOR IDENT.	FIND NO.	GAUGE (REF.)	COLOR (REF.)	LENGTH (APPROX)	ORIGIN		ACCESS FIND NO	DESTINATION		ACCESS FIND NO	REMARKS
441	15	16	4	7	K05	L3	14, 12	TB10	10	13	15
442	↑	↑	↑	4	TB10	9	13	FL15	OME	13	15 14
443				5	C33	OME	13	K05	L5	14, 12	15 14
444				7	TB10	12	13	K05	L6	14, 12	15
445				4	TB10	11	13	FL16	OME	13	15 14
446				5	C132	OME	13	K105	L2	14, 12	15 14
447				7	TB110	10	13	K105	L3	14, 12	
448				4	TB110	9	13	FL115	OME	13	15 14
449				5	C133	OME	13	K105	L5	14, 12	15 14
450	↓	↓	↓	7	K105	L6	14, 12	TB110	12	13	15
451	15	16	4	4	TB110	11	13	FL116	OME	13	15 14
452	9	24	4	2	TB10	4	6	GRD		8	15
453	9	24	4	2	TB110	4	6	GRD		8	15

AA3183 PRINTED IN U.S.A.

CONTROL DATA	NORMANDALE DIVISION	CODE IDENT 19333	SHEET 25	WL	DOCUMENT NO. 72994100	REV A

CONDUCTOR IDENT.	FIND NO.	GAUGE (REF.)	COLOR (REF.)	LENGTH (APPROX)	ORIGIN		ACCESS FIND NO.	DESTINATION		ACCESS FIND NO	REMARKS
500	1	20	4		TB09	23	6	S07	A3	3	
501	↑	↑	↑		TB09	27	(51) 2	S07	A2	↑	
502					TB09	22	6	S07	A1		
503					TB09	21	6	S1C7	A3		
504					TB09	26	(52) 2	S1C7	A2	↓	
505					TB09	20	6	S1C7	A1	3	
506					TB09	13	6	FRONT PANEL	GRD	4	
507	↓	↓	↓		S02	A3	3	TB09	27	(51)	
508	1	20	4		S102	A3	3	TB09	26	(52)	
510	1	20	4		TB09	2	6	S02	C1	3	
511	1	20	4		TB09	3	6	S102	C1	3	
512	1	20	"		TB09	25	6	S02	A2	3	
513	1	20	4		TB09	5	6	S102	A2	3	

CONTROL DATA	NORMANDALE DIVISION	CODE IDENT 19333	SHEET 26	WL	DOCUMENT NO. 72994100	REV. A

CONDUCTOR IDENT	FIND NO.	GAUGE (REF.)	COLOR (REF.)	LENGTH (APPROX)	ORIGIN		ACCESS FIND NO.	DESTINATION		ACCESS FIND NO	REMARKS
600											
601	13	16	4	3.5	K02-1	GND	2,3	GND		4 (1)	
↑↑ 2	↑	↑	↑	4	K02-2	↑	↑	↑		(2) 4	
3				4.5	K02-3					(3) 4	
4				5	K02-4					(3)	
5				6.5	K102-1					(1)	
6				7	K102-2					(2)	
7				7.5	K102-3	↓	↓			(1)	
↓ 8				8	K102-4	GND	2,3	↓		(2)	
09				3	TB13	5		GND		(3)	
10				5	↑	1		FL20	ME		
11				↑		2		FL18	↑		
12				↓	↓	3		FL118	↓		
13				5	TB13	4		FL120	ME		
14				3	FL20	OME		K02-1	IN	2,3	
15				6	FL120	↑		K102-1	↑	↑	
16				4.5	FL18	↓		K02-3	↓	↓	
17				7.5	FL118	OME		K102-3	IN	2,3	
↓ 18	↓	↓	↓	2	K02-1	COIL T	17	K02-2	COIL T	20 22 (4)	(15)
619	13	16	4	2	K02-2	COIL T	(4)	K02-3	COIL T	20 22 (5)	(15)

AA3183 PRINTED IN U.S.A.

CONTROL DATA	NORMANDALE DIVISION	CODE IDENT 19333	SHEET 27	WL	DOCUMENT NO 72994100	REV A

CONDUCTOR IDENT	FIND NO	GAUGE (REF.)	COLOR (REF.)	LENGTH (APPROX)	ORIGIN		ACCESS FIND NO	DESTINATION		ACCESS FIND NO	REMARKS
620	13	16	4	2	K02-3	COIL T	(5)	K02-4	COIL T	15,22	15
21				2	K102-1	COIL T	17	K102-2	COIL T	20,22 (6)	15
22				2	K102-2	COIL T	(6)	K102-3	COIL T	20,22 (7)	15
23				2	K102-3	COIL T	(7)	K102-4	COIL T	15,22	15
24				2	K02-1	COIL B	15, 22	K02-2	COIL B	20,22 (8)	15
25				2	K02-2	COIL B	(8)	K02-3	COIL B	20,22 (9)	15
26				2	K02-3	COIL B	(9)	K02-4	COIL B	17	15
27				2	K102-1	COIL B	15, 22	K102-2	COIL B	20, 22 (10)	15
28				2	K102-2	COIL B	(10)	K102-3	COIL B	20, 22 (11)	15
29				2	K102-3	COIL B	(11)	K102-4	COIL B	17	15
30				24	TB13	1		CB04	B	5 (12)	
31				24	TB13	4		CB04	B	(12)	
32				24	FL19	ME		CB04	B	(12)	
33				24	TB13	2		CB05	B	5 (13)	
34				24	TB13	3		CB05	B	(13)	
635	13	16	4	24	FL119	ME		CB05	B	(13)	

CONTROL DATA	NORMANDALE DIVISION	CODE IDENT 19333	SHEET 1 of 1	DN	DOCUMENT NO 72994100	REV A

NOTES:

1. COMPONENTS T06, L02 & L03 USE EXISTING LEADS.
2. FOR FIND NO. REFERENCED IN CONDUCTORS 1 THRU 55 SEE PL 40017800; D.C. PANEL HARNESS.
3. FOR FIND NO. REFERENCED IN CONDUCTORS 77 THRU 148 SEE PL 70820900; A.C. HARNESS.
4. FOR FIND NO. REFERENCED IN CONDUCTORS 153 THRU 355 SEE PL 72954700; D.C. HARNESS.
5. FOR FIND NO. REFERENCED IN CONDUCTORS 362 THRU 373 SEE PL 72954700 & 01; MISC. D.C. PANEL WIRING.
6. FOR FIND NO. REFERENCED IN CONDUCTORS 383 THRU 385, SEE PL 40018400; MISC. POWER SUPPLY WIRING.
7. A HEXAGON IN THE ACCESS FIND NO. COLUMN INDICATES THAT THE CONDUCTOR IS ONE OF SEVERAL (ALL WITH THE SAME NUMBER IN THE HEXAGON) GOING INTO THE SAME TERMINAL. THE NUMBER IN FRONT OF A HEXAGON IS THE TERMINAL FIND NO.
8. FOR FIND NO. REFERENCED IN CONDUCTORS 400 THRU 408 SEE PL 70820800-01; FRONT PANEL ASSY.
9.
10. FOR FIND NO. REFERENCED IN CONDUCTORS 415 THRU 434 SEE PL 70820100; A.C. PANEL ASSY.
11. FOR FIND NO. REFERENCED IN CONDUCTORS 440 THRU 451 SEE PL 70807900; D.C. RELAY PANEL ASSY.
12. FOR FIND NO. REFERENCED IN CONDUCTORS 452 THRU 453, SEE PL 70805400; D.C. RELAY TERMINAL BOARD ASSY.
13. ME STANDS FOR CONNECTION NEAREST MOUNTED END.
14. OME STANDS FOR CONNECTION OPPOSITE MOUNTED END.
15. NOT IN HARNESS.
16. FOR FIND NO'S REFERENCED IN CONDUCTORS 500 THRU 513 SEE PL 72954600; FRONT PANEL HARNESS
17. FOR FIND NO'S REFERENCED IN CONDUCTORS 618 THRU 629 SEE PL 70710101; COMPONENT MTG.ASSY.
18. FOR FIND NO'S REFERENCED IN CONDUCTORS 601 THRU 617 & 630 THRU 635 SEE PL 70724800; HG RELAY HARNESS ASSY.

AA3103

PRINTED IN U.S.A.

DWN	DM	12-6	CONTROL DATA	TITLE	PREFIX	DOCUMENT NO.	REV
CHKD	CM	12-6		WIRE LIST-POWER SUPPLY ASSY	WL	73118700	A
ENG	FWE	12-6	NORMANDALE DIVISION				
MFG			CODE IDENT	FIRST USED ON		SHEET	
APPR			19333	MULTIPLE DISK DRIVE		1 OF 27	

SHEET REVISION STATUS

REVISION RECORD

REV	ECO	DESCRIPTION	DRFT	DATE	APP
A	PE21933	DWG NO WAS 72994100	SB	1/25/84	I-NR

NOTES:

DN 73118700
DETACHED LISTS

CONTROL DATA		CODE IDENT 19333	SHEET 2	WL	DOCUMENT NO. 73118700	REV A

CONDUCTOR IDENT	FIND NO.	GAUGE (REF.)	COLOR (REF.)	LENGTH (APPROX)	ORIGIN		ACCESS FIND NO.	DESTINATION		ACCESS FIND NO.	REMARKS
1	3	16	4		C14	L	4	T01	3	7 ⟨1⟩	
2	↑	↑	↑		T01	3	⟨1⟩	CR04	4	4, 15	
3					CR04	3	4,15	C05	N	9 ⟨2⟩	
4					C05	N	⟨2⟩	C09	N	11 ⟨3⟩	
5					C09	N	⟨3⟩	TB02	4	4	
6					TB02	2	4	C06	N	11 ⟨4⟩	
7					C06	N	⟨4⟩	R02	R	4, 15	
8					R02	L	4, 15	C06	P	9 ⟨5⟩	
9					C06	P	⟨5⟩	CR05	1	4, 15	
10					CR05	4	4, 15	T01	9	1	
11					T01	10	1	CR05	2	4, 15	
12					CR05	3	4, 15	C06	N	⟨4⟩	
13					C08	N	6	R04	L	10	
14					R04	R	10	C04	P	6	
15					T08	1	4, 15	T05	3	4	
16					T05	1	4	T01	8	7 ⟨6⟩	
17					T01	8	⟨6⟩	T03	1	4	
18					T03	3	4	T09	1	4	
19	↓	↓	↓		T09	2	4	T01	6	1	
20	3	16	4		T01	4	1	T09	3	4	

AA3183 PRINTED IN U.S.A.

CONTROL DATA		CODE IDENT 19333	SHEET 3	WL	DOCUMENT NO. 73118700	REV. A

CONDUCTOR IDENT.	FIND NO.	GAUGE (REF.)	COLOR (REF.)	LENGTH (APPROX)	ORIGIN		ACCESS FIND NO.	DESTINATION		ACCESS FIND NO.	REMARKS
21	3	16	4		T09	4	4	CR04	2	4, 15	
22	↑	↑	↑		CR04	1	4, 15	C05	P	9 ⟨7⟩	
23					C05	P	⟨7⟩	C09	P	9 ⟨8⟩	
24					C09	P	⟨8⟩	R03	T	5, 12	
25					R03	B	5, 15	C09	N	⟨3⟩	
26					C02	N	6	R01	B	5, 12	
27					R01	T	5, 12	C02	P	6	
28					T05	4	4	T01	5	7 ⟨9⟩	
29					T01	5	⟨9⟩	T03	4	4	
30					T02	1	4	T01	8	7 ⟨10⟩	
31					T01	8	⟨10⟩	T04	1	4	
32					T04	3	4	T07	1	4	
33					T07	2	4	T01	7	7 ⟨11⟩	
34					T01	7	⟨11⟩	T08	2	4, 15	
35					T08	3	4	TB08	3	4	
36					TB07	2	4	T07	3	4, 15	
37					T07	4	41	C07	N	6	
38					T07	5	4	TB08	2	4	
39	↓	↓	↓		TB07	3	4	T08	6	4	
40	3	16	4		C14	R	4	T01	8	1	

CONTROL DATA		CODE IDENT 19333	SHEET 4	WL	DOCUMENT NO. 73118700	REV. A

CONDUCTOR IDENT.	FIND NO.	GAUGE (REF.)	COLOR (REF.)	LENGTH (APPROX)	ORIGIN		ACCESS FIND NO.	DESTINATION		ACCESS FIND NO.	REMARKS
41	3	16	4		T01	5	7 ⟨12⟩	T02	4	4	
42	3	16	↑		T04	4	4	T01	5	⟨12⟩	
43	2	14			TB07	1	8	T01	13	7	
44	↑	↑			T01	12	7	C07	P	9	
45					C07	P	9	C03	N	9	
46					C03	P	9	T08	5	8	
47					TB08	1	8	T01	11	7	
48					T01	15	7	C01	N	9	
49					C01	N	9	C02	N	9	
50					C02	P	9	L01	2	8	
51					L01	1	8	C01	P	9	
52					C04	N	9	C08	P	9	
53					C08	P	9	C07	P	9	
54	↓	↓	↓		C08	P	9	TB02	3	B	
55	2	14	4		TB02	1	8	C02	N	9	
56											
57											
58											
59											
60											

AA3183

PRINTED IN U.S.A.

CONTROL DATA		CODE IDENT 19333	SHEET 5	WL	DOCUMENT NO. 73118700	REV. A

CONDUCTOR IDENT.	FIND NO.	GAUGE (REF.)	COLOR (REF.)	LENGTH (APPROX)	ORIGIN		ACCESS FIND NO.	DESTINATION		ACCESS FIND NO.	REMARKS
61											
62											
63											
64											
65											
66											
67											
68											
69											
70											
71											
72											
73											
74											
75											
76											
77	4	16	4		CB03	AT	8	CB02	AT	9 ⟨1⟩	
78	↑	↑	↑		CB02	AT	⟨1⟩	CB103	AT	8	
79	↓	↓	↓		CB03	AB	8	C21	ME	5	△13
80	4	16	4		TB11	1	15	J03	1	13	

CONTROL DATA		CODE IDENT 19333	SHEET 6	WL	DOCUMENT NO. 73118700	REV A

CONDUCTOR IDENT.	FIND NO.	GAUGE (REF.)	COLOR (REF.)	LENGTH (APPROX)	ORIGIN		ACCESS FIND NO.	DESTINATION		ACCESS FIND NO.	REMARKS
81	4	16	4		J03	2	13	FL12	CAP B	5	
82	↑	↑	↑		C22	ME	5	CB03	BB	8	△13
83					CB103	BT	8	CB02	BT	9 ⟨3⟩	
84					CB02	BT	⟨3⟩	CB03	BT	8	
85					CB02	AB	8	J02	1	13	
86					J02	2	13	CB02	BB	8	
87					CB03	CT	8	CB02	CT	12 ⟨4⟩	
88					CB02	CT	⟨4⟩	CB103	CT	8	
89					CB03	CB	8	C23	ME	5	△13
90					FL13	CAP B	5	J03	3	13	
91					J02	3	13	CB02	CB	8	
92	↓	↓	↓		CB02	AT	9 ⟨5⟩	XF03	T	10	
93	4	16	4		XF03	B	10	TB11	2	15	
94											
95	4	16	4		C123	ME	5	CB103	CB	8	△13
96	↑	↑	↑		CB103	BB	8	C122	ME	5	△13
97					FL113	CAP T	5	J103	3	13	
98					J103	2	13	FL112	CAP T	5	
99	↓	↓	↓		TB11	4	15	J103	1	13	
100	4	16	4		C121	ME	5	CB103	AB	8	△13

AA3183

PRINTED IN U.S.A.

CONTROL DATA | CODE IDENT 19333 | SHEET 7 | WL | DOCUMENT NO. 73118700 | REV. A

CONDUCTOR IDENT.	FIND NO.	GAUGE (REF.)	COLOR (REF.)	LENGTH (APPROX)	ORIGIN		ACCESS FIND NO.	DESTINATION		ACCESS FIND NO.	REMARKS
101	4	16	4		XF04	B	10	T01	1	22	
102	↑	↑	↑		T01	2	22	XF05	B	10	
103	↓	↓			XF05	T	10	CB02	CT	⟨4⟩	
104	4	16			CB02	BT	9 ⟨9⟩	XF04	T	10	
105	3	20			TB03	11	23	TB03	9	10 ⟨56⟩	
106	↑	↑			TB03	9	10 ⟨56⟩	TB03	7	10 ⟨57⟩	
107					TB03	1	23	CB02	AT	⟨5⟩	
108					CB02	BT	⟨9⟩	TB03	3	23	
109					TB03	5	23	CB02	CT	8 ⟨10⟩	
110					CB02	CT	⟨10⟩	DS04	B	23	
111					DS04	T	23	TB01	1	11	
112					TB01	1	11	P106	2	14	
113					P106	1	14	TB11	4	15	
114					FL114	CAP T	5	J103	6	14	
115					J103	7	14	TB01	2	11	
116					TB01	2	11	J03	7	14	
117					J03	6	14	FL14	CAP B	5	
118					TB11	2	15	J05	1	14	
119	↓	↓	↓		J05	2	14	TB01	1	11	
120	3	20	4		TB01	1	11	TB03	7	23 ⟨57⟩	

CONTROL DATA | CODE IDENT 19333 | SHEET 8 | WL | DOCUMENT NO. 73118700 | REV. A

CONDUCTOR IDENT.	FIND NO.	GAUGE (REF.)	COLOR (REF.)	LENGTH (APPROX)	ORIGIN		ACCESS FIND NO.	DESTINATION		ACCESS FIND NO.	REMARKS
121	3	20	4		J03	8	14	TB01	4	11	
122	↑	↑	↑		TB01	4	11	J103	8	14	
123					J103	5	14	TB01	3	11	
124					TB01	3	11	J05	3	14	
125					J05	4	14	TB11	3	15	
126					TB11	3	15	J05	7	14	
127					J05	8	14	TB01	2	11	
128					TB01	2	11	J05	5	14	
129					J05	6	14	TB01	4	11	
130					TB01	4	11	J05	9	14	
131					J103	4	14	TB01	3	11	
132					TB01	3	11	J03	5	14	
133					J03	4	14	TB01	3	11	
134					TB01	1	11	P06	2	14	
135					P06	1	14	TB11	1	15	
136					J02	4	14	TB01	3	11	
137					TB01	4	11	J02	5	14	
138					TB03	2	23	TB03	8	23	
139	↓	↓	↓		TB03	10	23	TB03	4	23	
140	3	20	4		TB03	6	23	TB03	12	23	

AA 3183 PRINTED IN U.S.A.

CONTROL DATA		CODE IDENT 19333	SHEET 9	WL	DOCUMENT NO. 73118700	REV. A

CONDUCTOR IDENT.	FIND NO.	GAUGE (REF.)	COLOR (REF.)	LENGTH (APPROX)	ORIGIN		ACCESS FIND NO.	DESTINATION		ACCESS FIND NO.	REMARKS
141	3	20	4		B01	L	17, 18	TB11	2	15	
142	↑	↑	↑		TB11	3	15	B02	L	17, 18	
143	↓	↓	↓		B02	R	17, 18	TB01	2	11	
144	3	20	4		TB01	2	11	B01	R	17, 18	
145	4	16	4		TB11	2	15	C24	ME	5	△13
146	↑	↑	↑		FL11	CAP B	5	TB11	1	15	
147	↓	↓	↓		TB11	3	15	C124	ME	5	△13
148	4	16	4		FL111	CAP T	5	TB11	4	15	
149											
150											
151											
152											
153	10	16	4		CB07	T	2	C02	P	7 ⟨1⟩	
154	↑	↑	↑		C02	P	⟨1⟩	CB107	T	2	
155					CB106	T	2	C09	P	7 ⟨2⟩	
156					C09	P	⟨2⟩	CB06	T	2	
157					CB06	B	2	C32	ME	5	△13
158					FL15	ME	5	TB02	11	12	△13
159	↓	↓	↓		TB02	11	12	J04	21	3	
160	10	16	4		J04	20	3	K102-1	OUT	23	

CONTROL DATA		CODE IDENT 19333	SHEET 10	WL	DOCUMENT NO. 73118700	REV. A

CONDUCTOR IDENT.	FIND NO.	GAUGE (REF.)	COLOR (REF.)	LENGTH (APPROX)	ORIGIN		ACCESS FIND NO.	DESTINATION		ACCESS FIND NO.	REMARKS
161											
162											
163	10	16	4		K02-1	OUT	23	J04	18	3	
164	↑	↑	↑		J04	17	3	TB02	13	12	
165					FL16	ME	5	TB02	13	12	△13
166					C33	ME	5	XF02	B	16	△13
167					XF02	T	16	K06	6	5 ⟨6⟩	
168					K06	6	⟨6⟩	XF102	T	16	
169					XF102	B	16	C133	ME	5	△13
170					FL116	ME	5	TB02	14	12	△13
171	↓	↓	↓		TB02	14	12	J04	35	3	
172	10	16	4		J04	29	3	K102-3	OUT	23	
173											
174											
175	10	16	4		K02-3	OUT	23	J04	28	3	
176	↑	↑	↑		J04	30	3	TB02	12	12	
177					FL115	ME	5	TB02	12	12	△13
178					C132	ME	5	CB106	B	2	△13
179	↓	↓	↓		CB107	B	2	K102-2	IN	14,25	
180	10	16	4		K102-2	OUT	23	J04	14	3	

CONTROL DATA | CODE IDENT 19333 | SHEET 11 | WL | DOCUMENT NO. 73118700 | REV. A

CONDUCTOR IDENT.	FIND NO.	GAUGE (REF.)	COLOR (REF.)	LENGTH (APPROX)	ORIGIN		ACCESS FIND NO.	DESTINATION		ACCESS FIND NO.	REMARKS
181	10	16	4		J04	13	3	K02-2	OUT	23	
182	↑	↑	↑		K02-2	IN	14,25	CB07	B	2	
183	↓	↓	↓		CB04	T	2	C04	P	2	
184	10	16	4		C08	N	2	CB05	T	2	
185											
186	10	16	4		J04	3	3	TB02	5	12	
187	↑	↑	↑		TB02	5	12	J04	2	3	
188					J04	1	3	TB02	6	12	
189					TB02	7	12	XF01	B	16	
190	↓	↓	↓		XF01	T	16	C03	P	2	
191	10	16	4		TB02	3	12	TB04	2	16	
192											
193	21	20	4		J04	33	4	K101	R3	15, 24	
194	↑	↑	↑		TB02	7	14 ⟨12⟩	J04	48	4	
195					J04	46	4	TB09	8	8	
196					TB09	9	8	J04	45	4	
197					J04	43	4	S07	B1	11, 25	
198					S07	B3	11, 25	J04	42	4	
199	↓	↓	↓		J04	41	4	S07	C1	11, 25	
200	21	20	4		S07	C3	11, 25	J04	40	4	

CONTROL DATA | CODE IDENT 19333 | SHEET 12 | WL | DOCUMENT NO. 73118700 | REV. A

CONDUCTOR IDENT.	FIND NO.	GAUGE (REF.)	COLOR (REF.)	LENGTH (APPROX)	ORIGIN		ACCESS FIND NO.	DESTINATION		ACCESS FIND NO.	REMARKS
201	21	20	4		J04	39	4	K05	L8	15,24	
202	↑	↑	↑		K05	R2	15, 24	TB02	2	11	
203					TB02	2	11	K105	R2	15, 24	
204					K105	L8	15, 24	J04	54	4	
205					J04	55	4	S107	C3	11, 25	
206					S107	C1	11, 25	J04	56	4	
207					J04	57	4	S107	B3	11, 25	
208					S107	B1	11, 25	J04	58	4	
209					J04	65	4	S107	C2	12 ⟨47⟩ 25	
210					S107	B2	12 25 ⟨48⟩	S107	C2	⟨47⟩	
211					S107	B2	⟨48⟩	K101	L3	15, 24	
212					K101	L2	15, 24	J04	64	4	
213					J04	62	4	TB09	6	8	
214					TB09	7	8	J04	60	4	
215					J04	52	4	TB02	7	⟨12⟩	
216					TB02	7	14	J04	37	4	
217					J04	53	4	J04	66	3 ⟨14⟩	
218					J04	66	⟨14⟩	K105	L9	15, 24	
219	↓	↓	↓		J04	51	4	TB02	5	11	
220	21	20	4		TB02	5	11	J04	36	4	

AA3183 PRINTED IN U.S.A.

CONTROL DATA | CODE IDENT 19333 | SHEET 13 | WL | DOCUMENT NO. 73118700 | REV A

CONDUCTOR IDENT.	FIND NO.	GAUGE (REF.)	COLOR (REF.)	LENGTH (APPROX)	ORIGIN		ACCESS FIND NO.	DESTINATION		ACCESS FIND NO.	REMARKS
221	21	20	4		J04	26	4	TB02	3	11	
222	↓	↑	↑		TB02	3	11	J04	16	4	
223					J04	24	4	K01	R3	15, 24	
224	↓	↓	↓		K01	R2	15, 24	S02	B2	11,25	
225	21	20	4		S02	B3	11, 25	TB02	9	11	
226											
227											
228	21	20	4		TB02	9	11	K05	1	15, 24	
229	↑	↑	↑		K05	R3	15, 24	K02-4	COIL B	14 25 (15)	
230					K02-4	COIL B	(15)	TB04	8	8	
231					TB04	8	8	K01	L6	15, 24	
232					K01	L5	15, 24	TB02	2	14 (16)	
233					TB02	2	(16)	K101	L6	15, 24	
234					K101	L6	15, 24	K102-4	COIL B	14 25 (17)	
235					K102-4	COIL B	(17)	TB04	22	8	
236	↓	↓	↓		TB04	22	8	K105	R3	15, 24	
237	21	20	4		K105	R5	15, 24	TB02	4	11	
238	17	24	4		R105	R1	(42)	SSW104	4	11	
239	21	20	4		SSW103	4	14 (19)	SSW102	4	14 (20)	
240	21	20	4		SSW102	4	(20)	SSW101	4	11	

CONTROL DATA | CODE IDENT 19333 | SHEET 14 | WL | DOCUMENT NO 73118700 | REV A

CONDUCTOR IDENT.	FIND NO.	GAUGE (REF.)	COLOR (REF.)	LENGTH (APPROX)	ORIGIN		ACCESS FIND NO.	DESTINATION		ACCESS FIND NO.	REMARKS
241	21	20	4		SSW103	4	(19)	TB02	4	11	
242	17	24	4		K05	R1	15 24 (34)	SSW04	4	11	
243											
244											
245	21	20	4		TB02	10	11	S102	B3	11, 25	
246	21	20	4		TB04	21	8	TB09	10	8	
247	21	20	4		TB04	7	(46), 16	TB09	18	8	
248											
249	21	20	4		TB04	7	16, (46)	K02-1	COIL T	25,11	
250	21	20	4		K102-1	COIL T	25,11	TB04	21	(50) +6	
251											
252											
253	21	20	4		TB02	7	12 (21)	CB02	5B	5	
254	↑	↑	↑		CB02	3D	5	CB04	5B	5	
255					CB04	3D	5	CB05	5B	5	
256					CB05	3D	5	CB107	5B	5	
257					DS109	B	8	TB02	12	11	
258					TB02	14	11	DS106	B	8	
259	↓	↓	↓		DS06	B	8	TB02	13	11	
260	21	20	4		TB02	11	11	DS09	B	8	

AA3183

PRINTED IN U.S.A.

CONTROL DATA		CODE IDENT 19333	SHEET 15	WL	DOCUMENT NO. 73118700	REV. A

CONDUCTOR IDENT.	FIND NO.	GAUGE (REF.)	COLOR (REF.)	LENGTH (APPROX)	ORIGIN		ACCESS FIND NO.	DESTINATION		ACCESS FIND NO.	REMARKS
261	21	20	4		CB07	58	5	CB05	3D	5	
262					TB02	4	11	SSW03	4	14 (22)	
263					SSW03	4	(22)	SSW02	4	14 (23)	
264					SSW02	4	(23)	SSW01	4	11	
265					SSW01	3	14 (24)	SSW02	3	14 (25)	
266	21	20	4		SSW02	3	(25)	SSW03	3	14 (26)	
267											
268	21	20	4		TB02	9	11	SSW01	3	(24)	
269					SSW101	3	14 (27)	SSW102	3	14 (28)	
270					SSW102	3	(28)	SSW103	3	14 (29)	
271					SSW03	3	(26)	SSW04	3	11	
272	21	20	4		SSW103	3	(29)	SSW104	3	11	
273											
274	21	20	4		K105	1	15, 24	TB02	10	11	
275											
276					TB02	10	11	SSW101	3	(27)	
277											
278	21	20	4		K101	R2	15, 24	S102	B2	11, 25	
279											
280	21	20	4		S07	B2	12 25 (45)	K01	L3	15, 24	

CONTROL DATA		CODE IDENT 19333	SHEET 16	WL	DOCUMENT NO. 73118700	REV. A

CONDUCTOR IDENT.	FIND NO.	GAUGE (REF.)	COLOR (REF.)	LENGTH (APPROX)	ORIGIN		ACCESS FIND NO.	DESTINATION		ACCESS FIND NO.	REMARKS
281	17	24	4		K02-2	OUT	25,11	DS05	B	8	
282					DS05	T	8	TB02	6	11 (30)	
283					TB02	6	(30)	DS105	T	8	
284					DS105	B	8	K102-2	OUT	25,11	
285					K102-1	OUT	25,11	DS107	B	8	
286					DS107	T	8	TB02	1	11 (31)	
287					TB02	1	(31)	DS07	T	8	
288					DS07	B	8	K02-1	OUT	25,11	
289					K02-3	OUT	25,11	DS08	B	8	
290					DS08	T	8	TB02	6	11 (32)	
291					TB02	6	(32)	DS108	T	8	
292					DS108	B	8	K102-3	OUT	25,11	
293					K102-4	IN	11, 25	TB02	8	11 (33)	
294	17	24	4		TB02	8	(33)	K05	L9	9, 24	
295											
296	17	24	4		K05	R1	(34)	J04	27	6	
297					J04	25	6	TB02	8	11 (35)	
298					TB02	8	(35)	K101	1	9, 24	
299					K101	2	24, 9	TB02	4	11	
300	17	24	4		TB02	1	11 (36)	DS10	T	8	

AA3183

PRINTED IN U.S.A.

CONTROL DATA

CODE IDENT 19333 | SHEET 17 | WL | DOCUMENT NO. 73118700 | REV A

CONDUCTOR IDENT.	FIND NO.	GAUGE (REF.)	COLOR (REF.)	LENGTH (APPROX)	ORIGIN		ACCESS FIND NO.	DESTINATION		ACCESS FIND NO.	REMARKS
301	17	24	4		DS10	B	8	TB02	7	⟨21⟩	
302	↑	↑	↑		TB02	7	11 ⟨40⟩	S01	A3	11, 25	
303	↓	↓	↓		S01	B2	11, 25	TB02	2	11 ⟨37⟩	
304	17	24	4		TB02	2	⟨37⟩	K05	R5	9, 24	
305											
306	17	24	4		K05	R6	9,24	J04	8	6	
307	↑	↑	↑		J04	7	6	K05	2	9, 24	
308					K01	2	9, 24	TB02	1	⟨36⟩	
309					TB02	1	11 ⟨38⟩	S102	C2	11, 25	
310					TB04	20	8	TB09	17	8	
311					TB04	20	8	J04	59	6	
312					J04	49	6	S01	A2	11 25 ⟨43⟩	
313					S01	A2	⟨43⟩	K02-4	IN	11 25 ⟨39⟩	
314	↓	↓	↓		K02-4	IN	⟨39⟩	K01	1	9, 24	
315	17	24	4		K01	L2	9, 24	TB02	7	⟨40⟩	
316											
317	17	24	4		J04	50	6	K02-4	OUT	25,11	
318	↑	↑	↑		K102-4	OUT	25,11	S07	C2	11 25 ⟨44⟩	
319	↓	↓	↓		S07	C2	⟨44⟩	S07	B2	⟨45⟩	
320	17	24	4		TB04	6	1 8	TB09	16	8	

CONTROL DATA

CODE IDENT 19333 | SHEET 18 | WL | DOCUMENT NO. 73118700 | REV A

CONDUCTOR IDENT.	FIND NO.	GAUGE (REF.)	COLOR (REF.)	LENGTH (APPROX)	ORIGIN		ACCESS FIND NO.	DESTINATION		ACCESS FIND NO.	REMARKS
321	17	24	4		TB04	6	8	J04	44	6	
322	↑	↑	↑		J04	22	6	DS111	B	8	
323					DS111	T	8	TB02	3	11 ⟨41⟩	
324					TB02	3	⟨41⟩	DS11	T	8	
325	↓	↓	↓		DS11	B	8	J04	10	6	
326	17	24	4		J04	15	6	K105	R1	15 24 ⟨42⟩	
327											
328	17	24	4		K105	2	9, 24	J04	5	6	
329	17	24	4		J04	4	6	K103	L6	9, 24	
330											
331											
332	17	24	4		TB02	1	⟨38⟩	S02	C2	11, 25	
333	↑	↑	↑		DS09	T	8	TB04	1	8	
334					TB04	15	8	DS109	T	8	
335					TB04	5	8	TB09	15	8	
336					TB04	5	8	TB04	19	8	
337					TB04	17	8	DS106	T	8	
338					DS06	T	8	TB04	3	8	
339	↓	↓	↓		TB02	11	11	J04	67	6	
340	17	24	4		J04	70	6	TB02	12	11	

AA3183 PRINTED IN U.S.A.

CONTROL DATA | CODE IDENT 19333 | SHEET 19 | WL | DOCUMENT NO. 73118700 | REV. A

CONDUCTOR IDENT.	FIND NO.	GAUGE (REF.)	COLOR (REF.)	LENGTH (APPROX)	ORIGIN		ACCESS FIND NO.	DESTINATION		ACCESS FIND NO.	REMARKS
341	21	20	4		TB04	2	8	TB04	4	8	
342	21	20	4		TB04	4	8	TB04	16	8	
343	21	20	4		TB04	16	8	TB04	18	8	
344											
345											
346											
347	21	20	4		C31	ME	5	CB07	3D	5	△14
348											
349											
350											
351											
352											
353	21	20	4		C131	ME	5	CB107	3D	5	△14
354	10	16	4		J04	12	3	FL19	0ME	5	
355	10	16	4		J04	11	3	FL119	0ME	5	
356											
357											
358											
359											
360											

CONTROL DATA | CODE IDENT 19333 | SHEET 20 | WL | DOCUMENT NO. 73118700 | REV. A

CONDUCTOR IDENT.	FIND NO.	GAUGE (REF.)	COLOR (REF.)	LENGTH (APPROX)	ORIGIN		ACCESS FIND NO.	DESTINATION		ACCESS FIND NO.	REMARKS
361											
362	△1	16		12	T06	1		T01	6	57	
363	↑	12		12	T06	2	1	T01	14	56	
364	|	12		11	T06	3		TB06	3	53	
365	|	16		10	T06	4		T02	3	51	
366	|	12		11	T06	5		TB06	2	53	
367	|	12		12	T06	6		T01	16	56	
368	|	16		6	L02	1		C03	P	50	
369	|	16		6	L02	2		C04	P	50	
370	↓	16		5	L03	1		C07	N	50	
371	△1	16		5	L03	2		C08	N	50	
372	52	16	4	12	C01	P	50	TB06	1	51	
373	54	14	4	4	T08	5	58	T08	4	53	
374											
375											
376											
377											
378											
379											
380											

AA3183 PRINTED IN U.S.A.

CONTROL DATA		CODE IDENT 19333	SHEET 21	WL	DOCUMENT NO. 73118700	REV A

CONDUCTOR IDENT.	FIND NO.	GAUGE (REF.)	COLOR (REF.)	LENGTH (APPROX)	ORIGIN		ACCESS FIND NO.	DESTINATION		ACCESS FIND NO.	REMARKS
381											
382											
383	67	16	4	10	PANEL BASE	GRD	68	FRONT PANEL	GRD	68	△15
384	73	20	4	16	T01	1	90	K06	7	75	△15
385	73	20	4	16	T01	2	90	K06	2	75	△15
386	67	16	4	12	C06	P	89	K06	1	75	△15
387											
388											
389											
390											
391											
392											
393											
394											
395											
396											
397											
398											
399											
400	40	20	4	7	TB09	19	42	C31	OME	75	△14 △15

CONTROL DATA		CODE IDENT 19333	SHEET 22	WL	DOCUMENT NO. 73118700	REV A

CONDUCTOR IDENT.	FIND NO.	GAUGE (REF.)	COLOR (REF.)	LENGTH (APPROX)	ORIGIN		ACCESS FIND NO.	DESTINATION		ACCESS FIND NO.	REMARKS
401	40	20	4	6	TB09	11	42	C131	OME		△14 △15
402	40	20	4	2	TB09	14	42	TB09	13	⟨53⟩ 39	△15
403	40	20	4	2	TB09	12	⟨54⟩ 39	TB09	13	⟨53⟩	△15
404	40	20	4	3	TB09	24	42	TB09	4	42	△15
405	40	20	4	2	TB09	4	42	TB09	12	⟨54⟩	△15
406	40	20	4	2.5	TB09	11	42	TB09	26	42	△15
407	40	20	4	3.5	TB09	19	42	TB09	27	42	△15
408	41	24	4	2.5	TB09	1	42	S01	B3	43,44	
409											
410											
411											
412											
413											
414											
415	22	16	4	2	C21	OME	18	SSW01	1	19	△15 △14
416	↑	↑	↑	2	C22	OME	18	SSW02	1	19	△15 △14
417				2	C23	OME	18	SSW03	1	19	△15 △14
418				2	C24	OME	18	SSW04	1	19	△15 △14
419	↓	↓	↓	3	SSW01	2	19	FL11	COIL B	18	△15
420	22	16	4	3	SSW02	2	19	FL12	COIL B	18	△15

AA3183

PRINTED IN U.S.A.

CONTROL DATA | CODE IDENT 19333 | SHEET 23 | WL | DOCUMENT NO. 73118700 | REV A

CONDUCTOR IDENT.	FIND NO.	GAUGE (REF.)	COLOR (REF.)	LENGTH (APPROX)	ORIGIN		ACCESS FIND NO.	DESTINATION		ACCESS FIND NO.	REMARKS
421	22	16	4	3	SSW03	2	19	FL13	COIL B	18	15
422	21	20	4	3	SSW04	2	20	FL14	COIL B	18	15
423											
424											
425											
426											
427	22	16	4	2	C121	OME	18	SSW101	1	19	15 14
428	↑	↑	↑	2	C122	OME	18	SSW102	1	19	15 14
429				2	C123	OME	18	SSW103	1	19	15 14
430				2	C124	OME	18	SSW104	1	19	15 14
431				8	SSW101	2	19	FL111	COIL T	18	15
432	↓	↓	↓	8	SSW102	2	19	FL112	COIL T	18	15
433	22	16	4	8	SSW103	2	19	FL113	COIL T	18	15
434	21	20	4	8	SSW104	2	19	FL114	COIL T	18	15
435											
436											
437											
438											
439											
440	15	16	4	5	C32	OME	13	K05	L2	14, 12	15 14

CONTROL DATA | CODE IDENT 19333 | SHEET 24 | WL | DOCUMENT NO. 73118700 | REV A

CONDUCTOR IDENT.	FIND NO.	GAUGE (REF.)	COLOR (REF.)	LENGTH (APPROX)	ORIGIN		ACCESS FIND NO.	DESTINATION		ACCESS FIND NO.	REMARKS
441	15	16	4	7	K05	L3	14, 12	TB10	10	13	15
442	↑	↑	↑	4	TB10	9	13	FL15	OME	13	15 14
443				5	C33	OME	13	K05	L5	14, 12	15 14
444				7	TB10	12	13	K05	L6	14, 12	15
445				4	TB10	11	13	FL16	OME	13	15 14
446				5	C132	OME	13	K105	L2	14, 12	15 14
447				7	TB110	10	13	K105	L3	14, 12	
448				4	TB110	9	13	FL115	OME	13	15 13
449				5	C133	OME	13	K105	L5	14, 12	15 14
450	↓	↓	↓	7	K105	L6	14, 12	TB110	12	13	15
451	15	16	4	4	TB110	11	13	FL116	OME	13	15 14
452	9	24	4	2	TB10	4	6	GRD		8	15
453	9	24	4	2	TB110	4	6	GRD		8	15

AA 3183 PRINTED IN U.S.A.

CONTROL DATA	NORMANDALE DIVISION	CODE IDENT 19333	SHEET 25	WL	DOCUMENT NO. 73118700	REV A

CONDUCTOR IDENT.	FIND NO.	GAUGE (REF.)	COLOR (REF.)	LENGTH (APPROX)	ORIGIN		ACCESS FIND NO.	DESTINATION		ACCESS FIND NO.	REMARKS
500	1	20	4		TB09	23	6	S07	A3	3	
501	↑	↑	↑		TB09	27	(51) 2	S07	A2	↑	
502					TB09	22	6	S07	A1		
503					TB09	21	6	S107	A3		
504					TB09	26	(52) 2	S107	A2	↓	
505					TB09	20	6	S107	A1	3	
506					TB09	13	6	FRONT PANEL	GRD	4	
507	↓	↓	↓		S02	A3	3	TB09	27	(51)	
508	1	20	4		S102	A3	3	TB09	26	(52)	
510	1	20	4		TB09	2	6	S02	C1	3	
511	1	20	4		TB09	3	6	S102	C1	3	
512	1	20	4		TB09	25	6	S02	A2	3	
513	1	20	4		TB09	5	6	S102	A2	3	

CONTROL DATA	NORMANDALE DIVISION	CODE IDENT 19333	SHEET 26	WL	DOCUMENT NO. 73118700	REV. A

CONDUCTOR IDENT.	FIND NO.	GAUGE (REF.)	COLOR (REF.)	LENGTH (APPROX)	ORIGIN		ACCESS FIND NO.	DESTINATION		ACCESS FIND NO.	REMARKS
600											
601	13	16	4	3.5	K02-1	GND	2,3	GND		4 (1)	
↑↑ 2	↑	↑	↑	4	K02-2	↑	↑	↑		(2) 4	
3				4.5	K02-3					(3) 4	
4				5	K02-4					(3)	
5				6.5	K102-1					(1)	
6				7	K102-2					(2)	
7				7.5	K102-3	↓	↓			(1)	
↓ 8				8	K102-4	GND	2,3	↓		(2)	
09				3	TB13	5		GND		(3)	
10				5	↑	1		FL20	ME		
11				↕		2		FL18	↕		
12				↓	↓	3		FL118	↓		
13				5	TB13	4		FL120	ME		
14				3	FL20	OME		K02-1	IN	2,3	
15				6	FL120	↑		K102-1	↑	↑	
16				4.5	FL18	↓		K02-3	↓	↓	
17				7.5	FL118	OME		K102-3	IN	2,3	
↓ 18	↓	↓	↓	2	K02-1	COIL T	17	K02-2	COIL T	20 22 (4)	△15
619	13	16	4	2	K02-2	COIL T	(4)	K02-3	COIL T	20 22 (5)	△15

AA3183

PRINTED IN U.S.A.

CONTROL DATA	NORMANDALE DIVISION	CODE IDENT 19333	SHEET 27	WL	DOCUMENT NO. 73118700	REV A

CONDUCTOR IDENT.	FIND NO.	GAUGE (REF.)	COLOR (REF.)	LENGTH (APPROX)	ORIGIN		ACCESS FIND NO.	DESTINATION		ACCESS FIND NO.	REMARKS
620	13	16	4	2	K02-3	COIL T	⬡5	K02-4	COIL T	15,22	△15
621				2	K102-1	COIL T	17	K102-2	COIL T	20,22 ⬡6	△15
622				2	K102-2	COIL T	⬡6	K102-3	COIL T	20,22 ⬡7	△15
623				2	K102-3	COIL T	⬡7	K102-4	COIL T	15,22	△15
624				2	K02-1	COIL B	15, 22	K02-2	COIL B	20,22 ⬡8	△15
625				2	K02-2	COIL B	⬡8	K02-3	COIL B	20,22 ⬡9	△15
626				2	K02-3	COIL B	⬡9	K02-4	COIL B	17	△15
627				2	K102-1	COIL B	15, 22	K102-2	COIL B	20, 22 ⬡10	△15
628				2	K102-2	COIL B	⬡10	K102-3	COIL B	20, 22 ⬡11	△15
629				2	K102-3	COIL B	⬡11	K102-4	COIL B	17	△15
630				24	TB13	1		CB04	B	5 ⬡12	
631				24	TB13	4		CB04	B	⬡12	
632				24	FL19	ME		CB04	B	⬡12	
633				24	TB13	2		CB05	B	5 ⬡13	
634				24	TB13	3		CB05	B	⬡13	
635	13	16	4	24	FL119	ME		CB05	B	⬡13	

CONTROL DATA	NORMANDALE DIVISION	CODE IDENT 19333	SHEET 1 of 1	DN	DOCUMENT NO. 73118700	REV. A

NOTES:

△1. COMPONENTS T06, L02 & L03 USE EXISTING LEADS.

2. FOR FIND NO. REFERENCED IN CONDUCTORS 1 THRU 55 SEE PL 40017800; D.C. PANEL HARNESS.

3. FOR FIND NO. REFERENCED IN CONDUCTORS 77 THRU 148 SEE PL 70820900; A.C. HARNESS.

4. FOR FIND NO. REFERENCED IN CONDUCTORS 153 THRU 355 SEE PL 72954700; D.C. HARNESS.

5. FOR FIND NO. REFERENCED IN CONDUCTORS 362 THRU 373 SEE PL 72954700 & 01; MISC. D.C. PANEL WIRING.

6. FOR FIND NO. REFERENCED IN CONDUCTORS 383 THRU 386, SEE PL 40018600; MISC. POWER SUPPLY WIRING.

7. A HEXAGON IN THE ACCESS FIND NO. COLUMN INDICATES THAT THE CONDUCTOR IS ONE OF SEVERAL (ALL WITH THE SAME NUMBER IN THE HEXAGON) GOING INTO THE SAME TERMINAL. THE NUMBER IN FRONT OF A HEXAGON IS THE TERMINAL FIND NO.

8. FOR FIND NO. REFERENCED IN CONDUCTORS 400 THRU 408 SEE PL 70820800-01, FRONT PANEL ASSY.

9.

10. FOR FIND NO. REFERENCED IN CONDUCTORS 415 THRU 434 SEE PL 70820100; A.C. PANEL ASSY.

11. FOR FIND NO. REFERENCED IN CONDUCTORS 440 THRU 451 SEE PL 70807900; D.C. RELAY PANEL ASSY.

12. FOR FIND NO. REFERENCED IN CONDUCTORS 452 THRU 453, SEE PL 70805400; D.C. RELAY TERMINAL BOARD ASSY.

13. ME STANDS FOR CONNECTION NEAREST MOUNTED END.

△14. OME STANDS FOR CONNECTION OPPOSITE MOUNTED END.

△15. NOT IN HARNESS.

16. FOR FIND NO'S REFERENCED IN CONDUCTORS 500 THRU 513 SEE PL 72954600; FRONT PANEL HARNESS

17. FOR FIND NO'S REFERENCED IN CONDUCTORS 618 THRU 629 SEE PL 70710101; COMPONENT MTG.ASSY.

18. FOR FIND NO'S REFERENCED IN CONDUCTORS 601 THRU 617 & 630 THRU 635 SEE PL 70724800; HG RELAY HARNESS ASSY.

AA3185

Printed in USA

DWN			CONTROL DATA CORPORATION	TITLE	PREFIX	DOCUMENT NO.	CD
CHKD				WIRE LIST - POWER SUPPLY ASSEMBLY	WL	73217000	6
ENG			NORMANDALE DIVISION				
MFG			CODE IDENT	FIRST USED ON		SHEET	
APPR			19333	MULTIPLE DISK DRIVE		1 OF 29	

~~SHEET REVISION STATUS~~

REVISION RECORD

REV	ECO	DESCRIPTION	DRFT	DATE	APP
A	PE24245 PE23000	DWG SIMILAR TO AND CREATED BY USING MASTER FROM 73129100	SB	7/28/71	I-R

NF 71 209

NOTES:

DN 73217000
DETACHED LISTS

CONTROL DATA CORPORATION	NORMANDALE DIVISION	CODE IDENT 19333	SHEET 2	WL	DOCUMENT NO. 73217000	CD 6	REV A

CONDUCTOR IDENT.	FIND NO.	GAUGE (REF.)	COLOR (REF.)	LENGTH (APPROX)	ORIGIN		ACCESS FIND NO.	DESTINATION		ACCESS FIND NO.	REMARKS
1	3	16	4		C14	L	4	T01	3	7 (1)	
2	↑	↑	↑		T01	3	(1)	CR04	4	4,15	
3					CR04	3	4,15	C05	N	9 (2)	
4					C05	N	(2)	C09	N	11 (3)	
5					C09	N	(3)	TB02	4	4	
6					TB02	2	4	C06	N	11 (4)	
7					C06	N	(4)	R02	R	4	
8					R02	L	4	C06	P	9 (5)	
9					C06	P	(5)	CR05	1	1	
10					CR05	4	1	T01	9	1	
11					T01	10	1	CR05	2	1	
12					CR05	3	1	C06	N	4	
13					C08	N	6	R04	L	10	
14					R04	R	10	C04	P	6	
15					T08	1	4,15	T05	3	(4)	
16					T05	1	4	T01	8	7 (6)	
17					T01	8	(6)	T03	1	4	
18					T03	3	4	T09	1	4	
19	↓	↓	↓		T09	2	4	T01	6	1	
20	3	16	4		T01	4	1	T09	3	4	

AA3183 PRINTED IN U.S.A.

CONTROL DATA	NORMANDALE DIVISION	CODE IDENT 19333	SHEET 3	WL	DOCUMENT NO. 73217000	CD 6	REV A

CONDUCTOR IDENT.	FIND NO.	GAUGE (REF.)	COLOR (REF.)	LENGTH (APPROX)	ORIGIN		ACCESS FIND NO.	DESTINATION		ACCESS FIND NO.	REMARKS
21	3	16	4		T09	4	4	CR04	2	4,15	
22					CR04	1	4,15	C05	P	9 (7)	
23					C05	P	(7)	C09	P	9 (8)	
24					C09	P	(8)	R03	T	5,15	
25					R03	B	5,15	C09	N	(3)	
26					C02	N	6	R01	B	5,15	
27					R01	T	5,15	C02	P	6	
28					T05	4	4	T01	5	7 (9)	
29					T01	5	(9)	T03	4	4	
30					T02	1	4	T01	8	7 (10)	
31					T01	8	(10)	T04	1	4	
32					T04	3	4	T07	1	4	
33					T07	2	4	T01	7	7 (11)	
34					T01	7	(11)	T08	2	4,15	
35					T08	3	4	TB08	3	4	
36					TB07	2	4	T07	3	4,15	
37					T07	4	4	C07	N	6	
38					T07	5	4	TB08	2	4	
39					TB07	3	4	T08	6	4	
40	3	16	4		C14	R	4	T01	8	1	

CONTROL DATA	NORMANDALE DIVISION	CODE IDENT 19333	SHEET 4	WL	DOCUMENT NO. 73217000	CD 6	REV A

CONDUCTOR IDENT.	FIND NO.	GAUGE (REF.)	COLOR (REF.)	LENGTH (APPROX)	ORIGIN		ACCESS FIND NO.	DESTINATION		ACCESS FIND NO.	REMARKS
41	3	16	4		T01	5	7 (12)	T02	4	4	
42	3	16			T04	4	4	T01	5	(12)	
43	2	14			TB07	1	8	T01	13	7	
44					T01	12	7	C07	P	9	
45					C07	P	9	C03	N	9	
46					C03	P	9	T08	5	8	
47					TB08	1	8	T01	11	7	
48					T01	15	7	C01	N	9	
49					C01	N	9	C02	N	9	
50					C02	P	9	L01	2	8	
51					L01	1	8	C01	P	9	
52					C04	N	9	C08	P	9	
53					C08	P	9	C07	P	9	
54					C08	P	9	TB02	3	8	
55	2	14	4		TB02	1	8	C02	N	9	
56											
57											
58											
59											
60											

AA 3183

PRINTED IN U.S.A.

CONTROL DATA	NORMANDALE DIVISION	CODE IDENT 19333	SHEET 5	WL	DOCUMENT NO. 73217000	CD 6	REV A

CONDUCTOR IDENT.	FIND NO.	GAUGE (REF.)	COLOR (REF.)	LENGTH (APPROX)	ORIGIN		ACCESS FIND NO.	DESTINATION		ACCESS FIND NO.	REMARKS
61											
62											
63											
64											
65											
66											
67											
68											
69											
70											
71											
72											
73											
74											
75											
76											
77	4	16	4		CB03	AT	8	CB02	AT	9 (1)	
78	4	16	4		CB02	AT	(1)	CB103	AT	8	
79	4	16	4		CB03	AB	8	C21	ME	5	△12
80	4	16	4		TB11	1	5	J03	1	13	

CONTROL DATA	NORMANDALE DIVISION	CODE IDENT 19333	SHEET 6	WL	DOCUMENT NO. 73217000	CD 6	REV A

CONDUCTOR IDENT.	FIND NO.	GAUGE (REF.)	COLOR (REF.)	LENGTH (APPROX)	ORIGIN		ACCESS FIND NO.	DESTINATION		ACCESS FIND NO.	REMARKS
81	4	16	4		J03	2	13	FL12	CAP B	5	
82	↑	↑	↑		C22	ME	5	CB03	BB	8	
83					CB103	BT	8	CB02	BT	9 (3)	
84					CB02	BT	(3)	CB03	BT	8	
85					CB02	AB	8	J02	1	13	
86					J02	2	13	CB02	BB	8	
87					CB03	CT	8	CB02	CT	12 (4)	
88					CB02	CT	(4)	CB103	CT	8	
89					CB03	CB	8	C23	ME	5	
90					FL13	CAPB	5	J03	3	13	
91					J02	3	13	CB02	CB	8	
92	↓	↓	↓		CB02	AT	9 (5)	XF03	T	10	
93	4	16	4		XF03	B	10	TB11	2	5	
94											
95	4	16	4		C123	ME	5	CB103	CB	8	
96	↑	↑	↑		CB103	BB	8	C122	ME	5	
97					FL113	CAPT	5	J103	3	13	
98					J103	2	13	FL112	CAPT	5	
99	↓	↓	↓		TB111	1	5	J103	1	13	
100	4	16	4		C121	ME	5	CB103	AB	8	

AA3183

PRINTED IN U.S.A.

CONTROL DATA	NORMANDALE DIVISION	CODE IDENT 19333	SHEET 7	WL	DOCUMENT NO. 73217000	CD 6	REV A

CONDUCTOR IDENT.	FIND NO.	GAUGE (REF.)	COLOR (REF.)	LENGTH (APPROX)	ORIGIN		ACCESS FIND NO.	DESTINATION		ACCESS FIND NO.	REMARKS
101	4	16	4		XF04	B	10	FL05	L	8	
102	4	16	↑		FL06	L	8	XF05	B	10	
103	4	16			XF05	T	10	CB02	CT	⟨4⟩	
104	4	16			CB02	BT	9 ⟨9⟩	XF04	T	10	
105	3	20			TB03	11	23	TB03	9	10	
106	↑	↑			TB03	9	10	TB03	7	10	
107					TB03	1	23	CB02	AT	⟨5⟩	
108					CB02	BT	⟨9⟩	TB03	3	23	
109					TB03	5	23	CB02	CT	8 ⟨10⟩	
110					CB02	CT	⟨10⟩	DS04	B	23	
111					DS04	T	23	TB01	1	11	
112					TB01	1	11	P106	2	14	
113					P106	1	14	TB111	1	5	
114					FL114	CAPT	5	J103	6	14	
115					J103	7	14	TB01	2	11	
116					TB01	2	11	J03	7	14	
117					J03	6	14	FL14	CAPB	5	
118					TB11	2	5	J05	1	14	
119	↓	↓	↓		J05	2	14	TB01	1	11	
120	3	20	4		TB01	1	11	TB03	7	23	

CONTROL DATA	NORMANDALE DIVISION	CODE IDENT 19333	SHEET 8	WL	DOCUMENT NO. 73217000	CD 6	REV A

CONDUCTOR IDENT.	FIND NO.	GAUGE (REF.)	COLOR (REF.)	LENGTH (APPROX)	ORIGIN		ACCESS FIND NO.	DESTINATION		ACCESS FIND NO.	REMARKS
121	3	20	4		J03	8	14	TB01	4	11	
122	↑	↑	↑		TB01	4	11	J103	8	14	
123					J103	5	14	TB01	3	11	
124					TB01	3	11	J05	3	14	
125					J05	4	14	TB111	2	5	
126					TB111	2	5	J05	7	14	
127					J05	8	14	TB01	2	11	
128					TB01	2	11	J05	5	14	
129					J05	6	14	TB01	4	11	
130					TB01	4	11	J05	9	14	
131					J103	4	14	TB01	3	11	
132					TB01	3	11	J03	5	14	
133					J03	4	14	TB01	3	11	
134					TB01	1	11	P06	2	14	
135					P06	1	14	TB11	1	5	
136					J02	4	14	TB01	3	11	
137					TB01	4	11	J02	5	14	
138					TB03	2	23	TB03	8	23	
139	↓	↓	↓		TB03	10	23	TB03	4	23	
140	3	20	4		TB03	6	23	TB03	12	23	

AA3183 PRINTED IN U.S.A.

CONTROL DATA	NORMANDALE DIVISION	CODE IDENT 19333	SHEET 9	WL	DOCUMENT NO. 73217000	CD 6	REV A

CONDUCTOR IDENT.	FIND NO.	GAUGE (REF.)	COLOR (REF.)	LENGTH (APPROX)	ORIGIN		ACCESS FIND NO.	DESTINATION		ACCESS FIND NO.	REMARKS
141	3	20	4		B01	L	17,18	TB11	2	5	
142	↑	↑	↑		TB111	2	5	B02	L	17,18	
143	↓	↓	↓		B02	R	17,18	TB01	2	11	
144	3	20	4		TB01	2	11	B01	R	17,18	
145	4	16	4		TB11	2	15	C24	ME	5	△12
146	↑	↑	↑		FL11	CAP B	5	TB11	1	15	
147	↓	↓	↓		TB11	3	15	C124	ME	5	
148	4	16	4		FL11	CAP T	5	TB11	4	15	
149											
150											
151											
152											
153	10	16	4		CB07	T	2	C02	P	7 ⟨1⟩	
154	↑	↑	↑		C02	P	⟨1⟩	CB107	T	2	
155					CB106	T	2	C09	P	7 ⟨2⟩	
156					C09	P	⟨2⟩	CB06	T	2	
157					CB06	B	2	C32	ME	5	
158					FL15	ME	5	TB02	11	12	
159	↓	↓	↓		TB02	11	12	J04	21	3	
160	10	16	4		J04	20	3	K102-1	OUT	23	

CONTROL DATA	NORMANDALE DIVISION	CODE IDENT 19333	SHEET 10	WL	DOCUMENT NO. 73217000	CD 6	REV A

CONDUCTOR IDENT.	FIND NO.	GAUGE (REF.)	COLOR (REF.)	LENGTH (APPROX)	ORIGIN		ACCESS FIND NO.	DESTINATION		ACCESS FIND NO.	REMARKS
161	10	16	4								
162	↑	↑	↑								
163					K02-1	OUT	23	J04	18	3	
164					J04	17	3	TB02	13	12	
165					FL16	ME	5	TB02	13	12	
166					C33	ME	5	XF02	B	16	
167					XF02	T	16	K06	6	5 ⟨6⟩	
168					K06	6	⟨6⟩	XF102	T	16	
169					XF102	B	16	C133	ME	5	
170					FL116	ME	5	TB02	14	12	
171	↓	↓	↓		TB02	14	12	J04	35	3	
172	10	16	4		J04	29	3	K102-3	OUT	23	
173	17	24	4		J04	31	6	C32	ME		
174	17	24	4		J04	32	6	C132	ME		
175	10	16	4		K02-3	OUT	23	J04	28	3	
176	↑	↑	↑		J04	30	3	TB02	12	12	
177					FL115	ME	5	TB02	12	12	
178					C132	ME	5	CB106	B	2	
179	↓	↓	↓		CB107	B	2	K102-2	1N	12,30	
180	10	16	4		K102-2	OUT	23	J04	14	3	

AA3183 PRINTED IN U.S.A.

CONTROL DATA	NORMANDALE DIVISION	CODE IDENT 19333	SHEET 11	WL	DOCUMENT NO. 73217000	CD 6	REV A

CONDUCTOR IDENT.	FIND NO.	GAUGE (REF.)	COLOR (REF.)	LENGTH (APPROX)	ORIGIN		ACCESS FIND NO.	DESTINATION		ACCESS FIND NO.	REMARKS
181	10	16	4		J04	13	3	K02-2	OUT	23	
182	↑	↑	↑		K02-2	IN	12,30	CB07	B	2	
183					CB04	T	2	C04	P	2	
184					C08	N	2	CB05	T	2	
185					FL119	OME	5	J04	11	3	
186					J04	3	3	TB02	5	12	
187					TB02	5	12	J04	2	3	
188					J04	1	3	TB02	6	12	
189					TB02	7	12	XF01	B	16	
190					XF01	T	16	C03	P	2	
191	↓	↓			TB02	3	12	TB04	2	16	
192	10	16	↓		FL19	OME	5	J04	12	3	
193	21	20	4		J04	33	4	S102	B2	11	
194											
195	21	20	4		J04	46	4	FL17	ME	5	
196	↑	↑	↑		TB15	4	5	TB02	7	12	
197					J04	43	4	TB09	23	8	
198					J04	56	4	S08	2	26, 27 (52)	
199	↓	↓	↓								
200	21	20	4		K01	2	15,24	C25	ME	5	

CONTROL DATA	NORMANDALE DIVISION	CODE IDENT 19333	SHEET 12	WL	DOCUMENT NO. 73217000	CD 6	REV A

CONDUCTOR IDENT.	FIND NO.	GAUGE (REF.)	COLOR (REF.)	LENGTH (APPROX)	ORIGIN		ACCESS FIND NO.	DESTINATION		ACCESS FIND NO.	REMARKS
201	21	20	4		TB09	22	14 (*1)	J04	45	4	
202	↑	↑	↑		K05	R2	15,24	TB02	2	11	
203					TB02	2	11	K105	R2	15,24	
204					K01	1	15,24	TB04	7	8	
205					K101	1	15,24	TB04	21	8	
206					TB09	16	14 (46)	J04	34	4	
207					J04	23	4	TB09	15	14	(50)
208					TB09	21	8	J04	58	4	
209					J04	57	4	S108	2	26, 27 (53)	
210											
211					K101	2	15,24	C125	ME	5	
212					TB09	20	16 (*2)	J04	60	4	
213					J04	62	4	FL117	ME	5	
214					TB115	4	5	TB02	7	12	
215	↓	↓	↓		J04	52	4	TB02	7	14	
216	21	20	4		TB02	7	14	J04	37	4	
217	21	20	4		S07	1	28, 29	TB02	1	14 (14)	
218	↑	↑	↑		TB02	1	(14)	S107	1	28,29	
219	↓	↓	↓		J04	51	4	TB02	5	11	
220	21	20	4		TB02	5	11	J04	36	4	

AA3183 PRINTED IN U.S.A.

CONTROL DATA	NORMANDALE DIVISION	CODE IDENT 19333	SHEET 13	WL	DOCUMENT NO. 73217000	CD 6	REV A

CONDUCTOR IDENT.	FIND NO.	GAUGE (REF.)	COLOR (REF.)	LENGTH (APPROX)	ORIGIN		ACCESS FIND NO.	DESTINATION		ACCESS FIND NO.	REMARKS
221	21	20	4		J04	26	4	TB02	3	11	
222	21	20	4		TB02	3	11	J04	16	4	
223	21	20	4		J04	24	4	S02	B2	11	
224											
225	21	20	4		S02	B3	11	TB02	9	11	
226											
227											
228	21	20	4		TB02	9	11	K05	1	15,24	
229	↑	↑	↑		K02-4COIL	B	30 14 ⟨15⟩	TB02	2	14 ⟨16⟩	
230	↓	↓	↓		K02-4COIL	B	⟨15⟩	TB04	8	8	
231	21	20	4		K102-4COIL	B	30 14 ⟨17⟩	TB02	2	⟨16⟩	
232											
233											
234											
235	21	20	4		K102-4-COIL	B	⟨17⟩	TB04	22	8	
236											
237	21	20	4		K105	R5	15,24	TB02	4	11	
238	17	24	4		K105	R1	⟨42⟩	SSW104	4	11	
239											
240											

CONTROL DATA	NORMANDALE DIVISION	CODE IDENT 19333	SHEET 14	WL	DOCUMENT NO. 73217000	CD 6	REV A

CONDUCTOR IDENT.	FIND NO.	GAUGE (REF.)	COLOR (REF.)	LENGTH (APPROX)	ORIGIN		ACCESS FIND NO.	DESTINATION		ACCESS FIND NO.	REMARKS
241	21	20	4		TB11	5	11	TB02	4	11	
242	17	24	4		K05	R1	15 24 ⟨34⟩	SSW04	4	11	
243											
244											
245	17	24	4		TB02	10	11	S102	B3	11	
246	↑	↑	↑		TB09	16	⟨46⟩	TB04	21	8	
247					TB04	7	8	TB09	15	8	
248					C31	OME	5	CB07	3D	5	
249					TB09	15	⟨50⟩	K02-1COIL	T	11,30	
250	↓	↓	↓		K102-1COIL	T	11,30	TB09	16	8	
251	21	20	4		C131	OME	5	CB107	3D	5	
252											
253	21	20	4		TB02	7	12 ⟨21⟩	CB02	5B	5	
254	↑	↑	↑		CB02	3D	5	CB04	5B	5	
255					CB04	3D	5	CB05	5B	5	
256					CB05	3D	5	CB107	5B	5	
257					DS109	B	8	TB02	12	11	
258					TB02	14	11	DS106	B	8	
259	↓	↓	↓		DS06	B	8	TB02	13	11	
260	21	20	4		TB02	11	11	DS09	B	8	

AA3183 PRINTED IN U.S.A.

CONTROL DATA	NORMANDALE DIVISION	CODE IDENT 19333	SHEET 15	WL	DOCUMENT NO. 73217000	CD 6	REV A

CONDUCTOR IDENT.	FIND NO.	GAUGE (REF.)	COLOR (REF.)	LENGTH (APPROX)	ORIGIN		ACCESS FIND NO.	DESTINATION		ACCESS FIND NO.	REMARKS
261	21	20	4		CB07	5B	5	CB05	3D	5	
262											
263											
264											
265											
266											
267											
268	21	20	4		TB02	9	11	TB11	6	11	
269											
270											
271	21	20	4		TB11	6	11	SSW04	3	11	
272	21	20	4		TB11	7	11	SSW104	3	11	
273											
274	21	20	4		K105	1	15,24	TB02	10	11	
275											
276	21	20	4		TB02	10	11	TB11	7	11	
277											
278											
279											
280											

CONTROL DATA	NORMANDALE DIVISION	CODE IDENT 19333	SHEET 16	WL	DOCUMENT NO. 73217000	CD 6	REV A

CONDUCTOR IDENT.	FIND NO.	GAUGE (REF.)	COLOR (REF.)	LENGTH (APPROX)	ORIGIN		ACCESS FIND NO.	DESTINATION		ACCESS FIND NO.	REMARKS
281	17	24	4		K02-2	OUT	11,30	DS05	B	8	
282	↑	↑	↑		DS05	T	8	TB02	6	11 (30)	
283					TB02	6	(30)	DS105	T	8	
284					DS105	B	8	K102-2	OUT	11,30	
285					K102-1	OUT	11,30	DS107	B	8	
286					DS107	T	8	TB02	1	11 (31)	
287					TB02	1	(31)	DS07	T	8	
288					DS07	B	8	K02-1	OUT	11,30	
289					K02-3	OUT	11,30	DS08	B	8	
290					DS08	T	8	TB02	6	11 (32)	
2911	↓	↓	↓		TB02	6	(32)	DS108	T	8	
292	17	24	4		DS108	B	8	K102-3	OUT	11,30	
293											
294											
295											
296	17	24	4		K05	R1	(34)	J04	27	6	
297	10	16	4		CB04	B	(4)	TB13	1	5	
298	10	16	4		CB05	B	(8)	TB13	3	5	
299											
300	17	24	4		TB02	1	11	DS10	T	8	

AA3183 PRINTED IN U.S.A.

CONTROL DATA	NORMANDALE DIVISION	CODE IDENT 19333	SHEET 17	WL	DOCUMENT NO. 73217000	CD 6	REV A

CONDUCTOR IDENT.	FIND NO.	GAUGE (REF.)	COLOR (REF.)	LENGTH (APPROX)	ORIGIN		ACCESS FIND NO	DESTINATION		ACCESS FIND NO	REMARKS
301	17	24	4		DS10	B	8	TB02	7	(21)	
302											
303											
304	17	24	4		TB02	2	11	K05	R5	9,24	
205											
306	17	24	4		K05	R6	9,24	J04	8	6	
307	17	24	4		J04	7	6	K05	2	9,24	
208											
209	17	24	4		TB02	1	11 (38)	S102	C2	11	
310	17	24	4		TB09	18	11	J04	59	6	
311											
312											
313											
314											
315											
316											
317											
318											
319											
320	17	24	4		TB09	19	11	J04	44	6	

CONTROL DATA	NORMANDALE DIVISION	CODE IDENT 19333	SHEET 18	WL	DOCUMENT NO. 73217000	CD 6	REV A

CONDUCTOR IDENT.	FIND NO.	GAUGE (REF.)	COLOR (REF.)	LENGTH (APPROX)	ORIGIN		ACCESS FIND NO.	DESTINATION		ACCESS FIND NO.	REMARKS
321											
322	21	20	4		J04	22	6	K101	R1	15,24	
323	↑	↑	↑		K101	R2	15,24	TB02	1	15	
324	↓	↓			K01	R2	15,24	TB02	1	15	
325	21	20			K01	R1	15,24	J04	10	6	
326	17	24	4		J04	15	6	K104	2	24,15 (42)	
327											
328	17	24	4		K105	2	9,24	J04	5	6	
329	17	24	4		J04	4	6	K103	L6	9,24	
330											
331											
332	17	24	4		TB02	1	(38)	S02	C2	11	
333	17	24	4		DS09	T	8	TB04	1	8	
334	17	24	4		TB04	15	8	DS109	T	8	
335											
336											
337	17	24	4		TB04	17	8	DS106	T	8	
338	17	24	4		DS06	T	8	TB04	3	8	
339	17	24	4		TB02	11	11	J04	67	6	
340	17	24	4		J04	70	6	TB02	12	11	

AA 3183 PRINTED IN U.S.A.

CONTROL DATA	NORMANDALE DIVISION	CODE IDENT 19333	SHEET 19	WL	DOCUMENT NO. 73217000	CD 6	REV. A

CONDUCTOR IDENT.	FIND NO.	GAUGE (REF.)	COLOR (REF.)	LENGTH (APPROX)	ORIGIN		ACCESS FIND NO.	DESTINATION		ACCESS FIND NO.	REMARKS
341	21	20	4		TB04	2	16	TB04	4	16	
342	21	20	4		TB04	4	16	TB04	16	16	
343	21	20	4		TB04	16	16	TB04	18	16	
344	21	20	4		S08	2	(52)	TB09	28	11	
345	↑	↑	↑		S108	2	(53)	TB09	29	11	
346					S07	3	28,29	TB09	22	(*1)	
347					S107	3	28,29	TB09	20	(*2)	
348					TB09	13	11	FRONT PNL	GRD	25	
349					TB09	26	11	TB02	2	23(*3)	
350					TB09	27	11	TB02	2	(*3)	
351					S08	4	28,29	TB09	9	11	
352					S108	4	28,29	TB09	7	11	
353	↓	↓	↓		TB09	17	11 (54)	C31	ME	5	
354	21	20	4		TB09	24	11 (55)	C131	ME	5	
355	21	20	4		TB09	17	11 (54)	S02	A3	11	
356	21	20	4		TB09	24	11 (55)	S102	A3	11	
357											
358											
359											
360											

CONTROL DATA	NORMANDALE DIVISION	CODE IDENT 19333	SHEET 20	WL	DOCUMENT NO. 73217000	CD 6	REV. A

CONDUCTOR IDENT.	FIND NO.	GAUGE (REF.)	COLOR (REF.)	LENGTH (APPROX)	ORIGIN		ACCESS FIND NO.	DESTINATION		ACCESS FIND NO.	REMARKS
361											
362	1	16		12	T06	1		T01	6	57	
363	↑	12		12	T06	2		T01	14	56	
364		12		11	T06	3		TB06	3	53	
365		16		10	T06	4		T02	3	51	
366		12		11	T06	5		TB06	2	53	
367		12		12	T06	6		T01	16	56	
368		16		6	L02	1		C03	P	50	
369		16		6	L02	2		C04	P	50	
370	↓	16		5	L03	1		C07	N	50	
371	1	16		5	L03	2		C08	N	50	
372	52	16	4	12	C01	P	50	TB06	1	51	
373	54	14	4	4	T08	5	58	T08	4	53	
374											
375											
376	75	20	4	16	T01	1	68	K 06	7	71	15
377	75	20	4	16	T01	2	68	K06	2	71	15
378	67	16	4	12	C06	P	92	K06	1	71	15
379	77				K04	L3	71,78	K04	L2	71,78	C52 + TO L3
380	77				K104	L3	71,78	K104	L2	71,78	C152 + TO L3

AA3103

PRINTED IN U.S.A.

CONTROL DATA	NORMANDALE DIVISION	CODE IDENT 19333	SHEET 21	WL	DOCUMENT NO. 73217000	CD 6	REV A

CONDUCTOR IDENT.	FIND NO.	GAUGE (REF.)	COLOR (REF.)	LENGTH (APPROX)	ORIGIN		ACCESS FIND NO.	DESTINATION		ACCESS FIND NO.	REMARKS
381											
382											
383	93			12	PANEL BASE	GRD		FRONT PANEL	GRD		
384	77				K01	1	71,78	K01	2	71,78	C50 + TO K01-1
385	77				K101	1	71,78	K101	2	71,78	C150 + TO K101-1
386	27	20	4	3	J04	53	43	TB09	8	41	
387	27	20	4	5	TB09	12	41	TB09	26	42 *6	
388	27	20	4	6	TB09	26	*6	TB09	30	42 *7	
389											
390	27	20	4	6	TB09	30	*7	TB09	27	42 *8	
391	27	20	4	3	J04	54	43	TB09	6	41	
392	27	20	4	5	TB09	27	*8	TB09	14	41	
393	27	20	4	4	TB09	30	41	TB09	25	42 51	
394	27	20	4	4	TB09	25	51	TB09	31	41	
395	27	20	4	6	TB09	25	41	TB09	13	41	
396	27	20	4	3	TB09	1	41	TB09	3	41	
397	27	20	4	3	TB09	2	41	TB09	4	41	
398	27	20	4		TB09	1	41	S02	A2	41	
399	27	20	4		TB09	2	41	S102	A2	41	
400	27	20	4		TB09	10	41	S02	C1	41	

CONTROL DATA	NORMANDALE DIVISION	CODE IDENT 19333	SHEET 22	WL	DOCUMENT NO. 73217000	CD 6	REV A

CONDUCTOR IDENT.	FIND NO.	GAUGE (REF.)	COLOR (REF.)	LENGTH (APPROX)	ORIGIN		ACCESS FIND NO.	DESTINATION		ACCESS FIND NO.	REMARKS
401	27	20	4		TB09	5	41	S102	C1	41	
402	27	20	4		C25	OME	25	J04	41	43	13
403	27	20	4		C125	OME	25	J04	42	43	
404											
405											
406											
407											
408											
409											
410											
411											
412											
413											
414											
415	22	16	4	2	C21	OME	18	SSW01	L1	19	
416	↑	↑	↑	2	C22	OME	18	SSW02	L1	19	
417				2	C23	OME	18	SSW03	L1	19	
418				2	C24	OME	18	SSW04	1	19	
419	↓	↓	↓	3	SSW01	LD	19	FL11	L B	18	
420	22	16	4	3	SSW02	LD	19	FL12	L B	18	

AA3183

PRINTED IN U.S.A.

CONTROL DATA	NORMANDALE DIVISION	CODE IDENT 19333	SHEET 23	WL	DOCUMENT NO. 73217000	CD 6	REV A

CONDUCTOR IDENT.	FIND NO.	GAUGE (REF.)	COLOR (REF.)	LENGTH (APPROX)	ORIGIN		ACCESS FIND NO.	DESTINATION		ACCESS FIND NO.	REMARKS
421	22	16	4	3	SSW03	LD	19	FL13	BL	18	
422	21	20	4	3	SSW04	2	20	FL14	COIL B	18	
423											
424											
425											
426											
427	22	16	4	2	C121	OME	18	SSW101	LI	19	
428	↑	↑	↑	2	C122	OME	18	SSW102	LI	19	
429				2	C123	OME	18	SSW103	LI	19	
430				2	C124	OME	18	SSW104	1	19	
431				8	SSW101	LD	19	FL111	TL	18	
432	↓	↓		8	SSW102	LD	19	FL112	TL	18	
433	22	16	↓	8	SSW103	LD	19	FL113	TL	18	
434	21	20	4	8	SSW104	2	19	FL114	COIL T	18	
435											
436											
437											
438											
439											
440	15	16	4	5	C32	OME	13	K05	L2	14,12	

CONTROL DATA	NORMANDALE DIVISION	CODE IDENT 19333	SHEET 24	WL	DOCUMENT NO. 73217000	CD 6	REV H

CONDUCTOR IDENT.	FIND NO.	GAUGE (REF.)	COLOR (REF.)	LENGTH (APPROX)	ORIGIN		ACCESS FIND NO.	DESTINATION		ACCESS FIND NO.	REMARKS
441	15	16	4	7	K05	L3	14,12	TB10	10	13	
442	↑	↑	↑	4	TB10	9	13	FL15	OME	13	
443				5	C33	OME	13	K05	L5	14,12	
444				7	TB10	12	13	K05	L6	14,12	
445				4	TB10	11	13	FL16	OME	13	
4461				5	C132	OME	13	K105	L2	14,12	
447				7	TB110	10	13	K105	L3	14,12	
448				4	TB110	9	13	FL115	OME	13	
449				5	C133	OME	13	K105	L5	14,12	
450	↓	↓		7	K105	L6	14,12	TB110	12	13	
451	15	16		4	TB110	11	13	FL116	OME	13	
452	7	20	↓		TB10	4	6		GRD	8	
453	7	20	4		TB110	4	6		GRD	8	
454											
455											
456	75	20	4	4	TB15	4	71	K01	L2	76	
457	↑	↑	↑	4	TB15	2	↑	K01	L3	↑	
458				4	TB115	4		K101	L2		
459	↓	↓	↓	4	TB115	2	↓	K101	L3	↓	
460	75	20	4	5	TB15	1	71	FL17	OME	76	

AA3183

PRINTED IN U.S.A.

CONTROL DATA	NORMANDALE DIVISION	CODE IDENT 19333	SHEET 25	WL	DOCUMENT NO. 73217000	CD 6	REV A

CONDUCTOR IDENT.	FIND NO.	GAUGE (REF.)	COLOR (REF.)	LENGTH (APPROX)	ORIGIN		ACCESS FIND NO.	DESTINATION		ACCESS FIND NO	REMARKS
461	75	20	4	5	TB115	1	71	FL117	OME	76	
462											
463											
464											
465	13	16	4	3.5	K02-1	GND	2,3	GND		4 (1)	
466				4	K02-1	GND	2,3	GND		(2) 4	
467				4.5	K02-3	GND	2,3	GND		(3) 4	
468				5	K02-4	GND	2,3	GND		(3)	
469				6.5	K102-1	GND	2,3	GND		(1)	
470				7	K102-2	GND	2,3	GND		(2)	
471				7.5	K102-3	GND	2,3	GND		(1)	
472				8	K102-4	GND	2,3	GND		(2)	
473				3	TB13	5		GND		(3)	
474				5	TB13	1		FL20	ME		
475				5	TB13	2		FL18	ME		
476				5	TB13	3		FL118	ME		
477				5	TB13	4		FL120	ME		
478				3	FL20	OME		K02-1	IN	2,3	
479				6	FL120	OME		K102-1	IN	2,3	
480	13	16	4	4.5	FL18	OME		K02-3	IN	2,3	

CONTROL DATA	NORMANDALE DIVISION	CODE IDENT 19333	SHEET 26	WL	DOCUMENT NO. 73217000	CD 6	REV A

CONDUCTOR IDENT.	FIND NO.	GAUGE (REF.)	COLOR (REF.)	LENGTH (APPROX)	ORIGIN		ACCESS FIND NO.	DESTINATION		ACCESS FIND NO	REMARKS
481	13	16	4	7.5	FL118	OME		K102-3	IN	2,3	
482				24	TB13	1		CB04	B	5 (12)	
483				24	TB13	4		CB04	B	(12)	
484				24	FL19	ME		CB04	B	(12)	
485				24	TB13	2		CB05	B	5 (13)	
486				24	TB13	3		CB05	B	(13)	
487	13	16	4	24	FL119	ME		CB05	B	(13)	
488											
489											
490											
491											
492	13	16	4	2	K02-1	COIL T	17	K02-2	COIL T	20,22	(4) (15)
493				2	K02-2	COIL T	(4)	K02-3	COIL T	20,22	(5)
494				2	K02-3	COIL T	(5)	K02-4	COIL T	15,22	
495				2	K102-1	COIL T	17	K102-2	COIL T	20,22	(6)
496				2	K102-2	COIL T	(6)	K102-3	COIL T	20,22	(7)
497				2	K102-3	COIL T	(7)	K102-4	COIL T	15,22	
498				2	K02-1	COIL B	15,22	K02-2	COIL B	20,22	(8)
499				2	K02-2	COIL B	(8)	K02-3	COIL B	20,22	(9)
500	13	16	4	2	K02-3	COIL B	(9)	K02-4	COIL B	17	(15)

AA3183 PRINTED IN U.S.A.

CONTROL DATA | NORMANDALE DIVISION | CODE IDENT 19333 | SHEET 27 | WL | DOCUMENT NO. 73217000 | CD 6 | REV A

CONDUCTOR IDENT.	FIND NO.	GAUGE (REF.)	COLOR (REF.)	LENGTH (APPROX)	ORIGIN		ACCESS FIND NO.	DESTINATION		ACCESS FIND NO.	REMARKS
501	13	16	4	2	K102-1	COIL B	15,22	K102-2	COIL B	20,22	10 16
502	13	16	4	2	K102-2	COIL B	10	K102-3	COIL B	20,22	11 15
503	13	16	4	2	K102-3	COIL B	11	K102-4	COIL B	17	15
504											
505											
506											
507											
508											
509											
510											
511											
512											
513											
514											
515											
516											
517											
518											
519											
520											

CONTROL DATA | NORMANDALE DIVISION | CODE IDENT 19333 | SHEET 28 | WL | DOCUMENT NO. 73217000 | CD 6 | REV. A

CONDUCTOR IDENT.	FIND NO.	GAUGE (REF.)	COLOR (REF.)	LENGTH (APPROX)	ORIGIN		ACCESS FIND NO.	DESTINATION		ACCESS FIND NO.	REMARKS
521											
522											
523											
524											
525	1	20	4	15	P07	1	3	SSW01	1	2	
526				15		2		SSW01	3		
527				15		3		SSW01	2		
528				14		4		SSW02	1		
529				14		5		SSW02	3		
530				14		6		SSW02	2		
531				10		7		SSW03	1		
532				10		8		SSW03	3		
533				10		9		SSW03	2		
534				10		10		TB11	5		
535				10	P07	12		TB11	6		
536				15	P107	1		SSW101	1		
537				15		2		SSW101	3		
538				15		3		SSW101	2		
539				14		4		SSW102	1		
540	1	20	4	14	P107	5	3	SSW102	3	2	

AA3183 PRINTED IN U.S.A.

CONTROL DATA	NORMANDALE DIVISION	CODE IDENT 19333	SHEET 29 OF 29	WL	DOCUMENT NO. 73217000	CD 6	REV. A

CONDUCTOR IDENT.	FIND NO.	GAUGE (REF.)	COLOR (REF.)	LENGTH (APPROX)	ORIGIN		ACCESS FIND NO.	DESTINATION		ACCESS FIND NO.	REMARKS
541	1	20	4	14	P107	6	3	SSW102	2	2	
542	↑	↑	↑	10	↑	7	↑	SSW103	1	↑	
543				10		8		SSW103	3		
544				10		9		SSW103	2		
545	↓	↓	↓	6	↓	10	↓	TB11	5	↓	
546	1	20	4	6	P107	12	3	TB11	7	2	

CONTROL DATA	NORMANDALE DIVISION	CODE IDENT 19333	SHEET 1 OF 1	DN	DOCUMENT NO. 73217000	CD 6	REV A

NOTES:

1. COMPONENTS T06, L02, & L03 USE EXISTING LEADS.
2. FOR FN REFERENCE IN CONDUCTORS 1 THRU 55 SEE PL 40017800; D.C. PANEL HARNESS.
3. FOR FN REFERENCED IN CONDUCTORS 77 THRU 148 SEE PL 70820900; A.C. HARNESS.
4. FOR FN REFERENCED IN CONDUCTORS 153 THRU 356 SEE PL 70723900; D.C. HARNESS.
5. FOR FN REFERENCED IN CONDUCTORS 362 THRU 373 SEE PL 40011800; 01; MISC D.C. PANEL.
6. FOR FN REFERENCED IN CONDUCTORS 376 THRU 385 AND 456 THRU 461 SEE PL 70814101; POWER SUPPLY ASSY.
7. A HEXAGON IN THE ACCESS FN COLUMN INDICATES THAT THE CONDUCTOR IS ONE OF SEVERAL (ALL WITH THE SAME NUMBER IN THE HEXAGON) GOING INTO THE SAME TERMINAL. THE NUMBER IN FRONT OF A HEXAGO . IS THE TERMINAL FN.
8. FOR FN REFERENCED IN CONDUCTORS 386 THRU 403 SEE PL 70708100; FRONT PANEL ASSY.
9.
10. FOR FN REFERENCED IN CONDUCTORS 415 THRU 435 SEE PL 70820100; A.C. PANEL ASSY.
11. FOR FN REFERENCED IN CONDUCTORS 440 THRU 451 SEE PL 70807900; D.C. RELAY PANEL ASSY.
12. "ME" DESIGNATES CONNECTION NEAR THE MOUNTED END.
13. "OME" DESIGNATES CONNECTION OPPOSITE THE MOUNTED END.
14. FOR FN REFERENCED IN CONDUCTORS 452 & 453 SEE PL 70805400; 01, D.C. RELAY TERMINAL BOARD ASSY.
15. NOT IN HARNESS.
16. FOR FN REFERENCE IN CONDUCTORS 465 THROUGH 487 SEE PL 70724801; HG RELAY HARNESS ASSY.
17. FOR FN REFERENCE IN CONDUCTORS 492 THROUGH 503 SEE PL 70710101; COMPONENT MTG ASSY.
18. FOR FIND NOAS REFERENCED IN CONDUCTORS 525 THRU 546 SEE PL 73127700; SOFT START HARNESS ASSY.

CONTROL DATA
MINNEAPOLIS, MINNESOTA

TITLE: WIRE LIST - MAINTENANCE PANEL ASSEMBLY

PRODUCT: MULT. DISK DRIVE

WL | DOCUMENT NO. 40016700 | REV. C

SHEET 1 OF 2

REVISION STATUS OF SHEETS

REVISIONS

REV.	ECO	DESCRIPTION	DRFT.	DATE	CHKD.	APPD.
A		RELEASED		11-13-68		MK
B	PM5578	SEE CO	GV	7-10-69	DCH	7-17
C	PM5578A	SEE CO	GV	7-10-69	DCH	7-17

NOTES:

1. FOR MECH ASSY AND FL SEE 40066300.

COPIES TO

BY C.M. 7/25 | CHKD. C.M. 7/25/69 | ENGR [illegible] | DATE [illegible]

FORM AA 1672

CONTROL DATA
MINNEAPOLIS, MINNESOTA

TITLE: WIRE LISTING
MAINTENANCE PANEL ASSEMBLY

WL | DOCUMENT NO. 40016700 | REV. C

SHEET 2 OF 2

CONDUCTOR IDENT.	FIND NO.	GAUGE (REF.)	COLOR (REF.)	LENGTH (APPROX)	ORIGIN		ACCESS. FIND NO.	DESTINATION		ACCESS. FIND NO.	REMARKS
1	6	20	-	1	A3S200	A2	7	A3S200	B2	7	
2	11	24	4	3	A3S200	A2	7	A3S201	3	13,14	
3	11	24	4	4	A3DS200	T	12	A3TP203	-	7	
4	6	20	-	1	A4S200	A2	7	A4S200	B2	7	
5	11	24	4	3	A4S200	A2	7	A4S201	3	13,14	
6	11	24	4	4	A4DS200	T	12	A4TP203	-	7	
7	11	24	4	3	A3TB204	5	7	A3S200	B1	7	
8	11	24	4	3	A4TB204	5	7	A4S200	B1	7	
9	11	24	4	3	A3TB204	7	7	A3S200	B2	7	
10	11	24	4	3	A4TB204	7	7	A4S200	B2	7	
11	11	24	4	3	A3TB204	8	7	A3S200	A3	7	
12	11	24	4	3	A4TB204	8	7	A4S200	A3	7	
13	11	24	4	3	A3TB204	6	7	A3S200	B3	7	
14	11	24	4	3	A4TB204	6	7	A4S200	B3	7	

COMMENT SHEET

MANUAL TITLE CONTROL DATA BM101 AND BM103

Multiple disk drive Customer Engineering Manual

PUBLICATION NO. 41249000 REVISION - J -

FROM: NAME: _____

BUSINESS ADDRESS: _____

COMMENTS:

This form is not intended to be used as an order blank. Your evaluation of this manual will be welcomed by Control Data Corporation. Any errors, suggested additions or deletions, or general comments may be made below. Please include page number references and fill in publication revision level as shown by the last entry on the Record of Revision page at the front of the manual. Customer engineers are urged to use the TAR.

CUT ALONG LINE

AA3419 REV. 11/69 PRINTED IN U.S.A.

NO POSTAGE STAMP NECESSARY IF MAILED IN U. S. A.

FOLD ON DOTTED LINES AND STAPLE

STAPLE

STAPLE

FOLD

FOLD

FIRST CLASS
PERMIT NO. 8241

MINNEAPOLIS, MINN.

BUSINESS REPLY MAIL
NO POSTAGE STAMP NECESSARY IF MAILED IN U.S.A.

POSTAGE WILL BE PAID BY

CONTROL DATA CORPORATION
Technical Publications Department
7801 Computer Avenue
Minneapolis, Minnesota 55435

CUT ALONG LINE

FOLD

FOLD

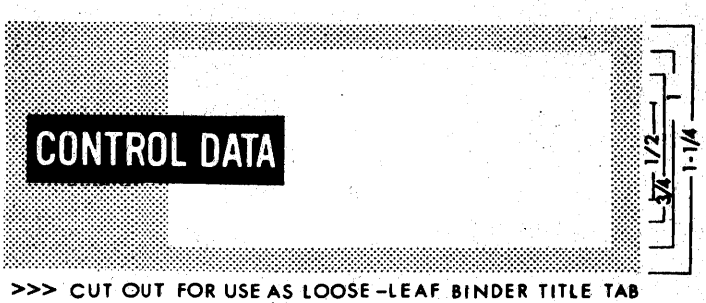

>>> CUT OUT FOR USE AS LOOSE-LEAF BINDER TITLE TAB

CONTROL DATA
CORPORATION

8100 34th AVE. SO., MINNEAPOLIS, MINN. 55440

LITHO IN U.S.A.