SPDU019

XDS Breakpoint/Trace Installation and Operation Guide

XDS Extended Development Support

TEXAS INSTRUMENTS

PREFACE

The purpose of this manual is to familiarize the user with the functions and theory of the Breakpoint/Trace board. The Breakpoint/Trace Board is an optional circuit card for the XDS that greatly increases the capabilities of the system. This manual also describes installation instructions for the Breakpoint/Trace board, part numbers 2311045-0001 and 2311045-0002. The user and installer should read this manual before attempting to operate or install the Breakpoint/trace board. If the Breakpoint/Trace board is removed form the XDS, this manual should be kept with the board for reference during future installation.

LIST of TABLES

Table	Title	Page
1-1	Breakpoint/Trace Board Configurations	1-2
1-2	Chassis Configuraiton Label Information	1-4
2-1	Extended Trace Probe Color Code	2-2
2-2	Breakpoint/Trace DC Power Requirements	2-2

TABLE of CONTENTS

Paragraph	Title	Page
	PREFACE	
	SECTION 1 INSTALLATION	
1.1	INTRODUCTION	1-1
1.1.1	Board Preperation and Installation	1-1
1.1.1.1	Board Configuration	1-1
1.1.2	Board Installation	1-2
1.1.2.1	Extended Trace Cable Installation	1-4
1.1.2.2	Installation Completion	1-4
	SECTION 2 HARDWARE FEATURES	
2.1	INTRODUCTION	2-1
2.1.1	Status Indicator Lights	2-1
2.1.2	Extended Trace Probe	2-1
2.1.3	Power Requirements	2-1
	SECTION 3 THEORY OF OPERATION	
3.1	INTRODUCTION	3-1
3.1.1	Break Point Capability	3-1
3.1.2	Tracing Capability	3-1
3.1.3	Block Diagram	3-1
	APPENDIX A Breakpoint/Trace Board Schematics	

LIST of FIGURES

Figure	Title	Page
1-1	Breakpoint/Trace Board PN 2311045	1-3
3-1	Breakpoint/trace Board Block Diagram	3-2

SECTION 1

INSTALLATION

1.1 INTRODUCTION

The breakpoint/Trace board is an option that significantly increases the emulationg power of the XDS, (Extended Development Support System). Some of this increaded performance includes being able to set a breakpoint on any memory access (read or write), breakpoint on an instruction opcode, and breakpoint on any I/O or CRU (Communications Regiter Unit) access (address and data can be specified). Alos, the Breakpoint/Trace board allows the user to trace the execution of a system under test by storing all the mecessary information of address and/or data in memory, and then displaying it after stopping at a breakpoint. More information on the use of the breakpoint/trace board is available in the emulator user's guide. Refer to this section if the board is not installed or if it is to be moved. Also refer to this seciton if you wish to change the board options.

1.1.1 Board Preperation and Installation.

The Breakpoint/Trace board can be configured so that it can support the major portion of the XDS system emulators. When installing the breakpoint/trace board you should check the type of emulator it is being used with to determin if a conversion is required.

1.1.1.1 Board Configuration.

The Breakpoint/Trace board is available in two configurations. Table 1-1 describes which configuration is used with each emulator system. The part number of the breakpoint/trace board determines how the board is configured and which emulators it will support. You should be sure and update the board's part number is the configuration of the board is changed. The board may be field converted from a 2311045-0001 to a 2311045-0002 by changing the 74ALS573 devices in locations U3 through U8 to 74ALS574 devices. Of course a 2311045-0002 may be converted to a 2311045-0001. Table 1-1 describes which devices are used on each configuration of the board. The location of the devices are shown in Figure 1-1 and they are installed in sockets

so no soldering is required.

Table 1-1 Breakpoint/Trace Board Configurations

Part Number	Emulator Type	Device Type Locations U3 - U8
2311045-0001	TMS7000	74ALS573
2311045-0001	TMS9995	74ALS573
2311045-0002	TMS32010	74ALS574
2311045-0002	TMS99000	74ALS574

1.1.2 Board Installation.

CAUTION

BEFORE INSTALLING OR REMOVING ANY BOARD, TURN OFF THE POWER TO THE XDS UNIT.

The XDS Model XX Installation and Operation Guide describes the procedure for installing or removing boards from the XDS unit. Refer to the manual appropriate for the XDS Model you are using. If an breakpoint/trace board is currently installed in the XDS it must be removed before another one can be installed. Only one breakpoint/trace board can be installed at any one time for the XDS to funciton properly. Tme breakpoint/trace board must be installed in slot number 1.

Boards removed from the chassis should be stored so that they are protected from static discharge. Erase the board information on the chassis configuration label for each circuit board removed.

For the Breakpoint/Trace board enter the following information on the chassis configuration label for slot number 1 as given in Table 1-2.

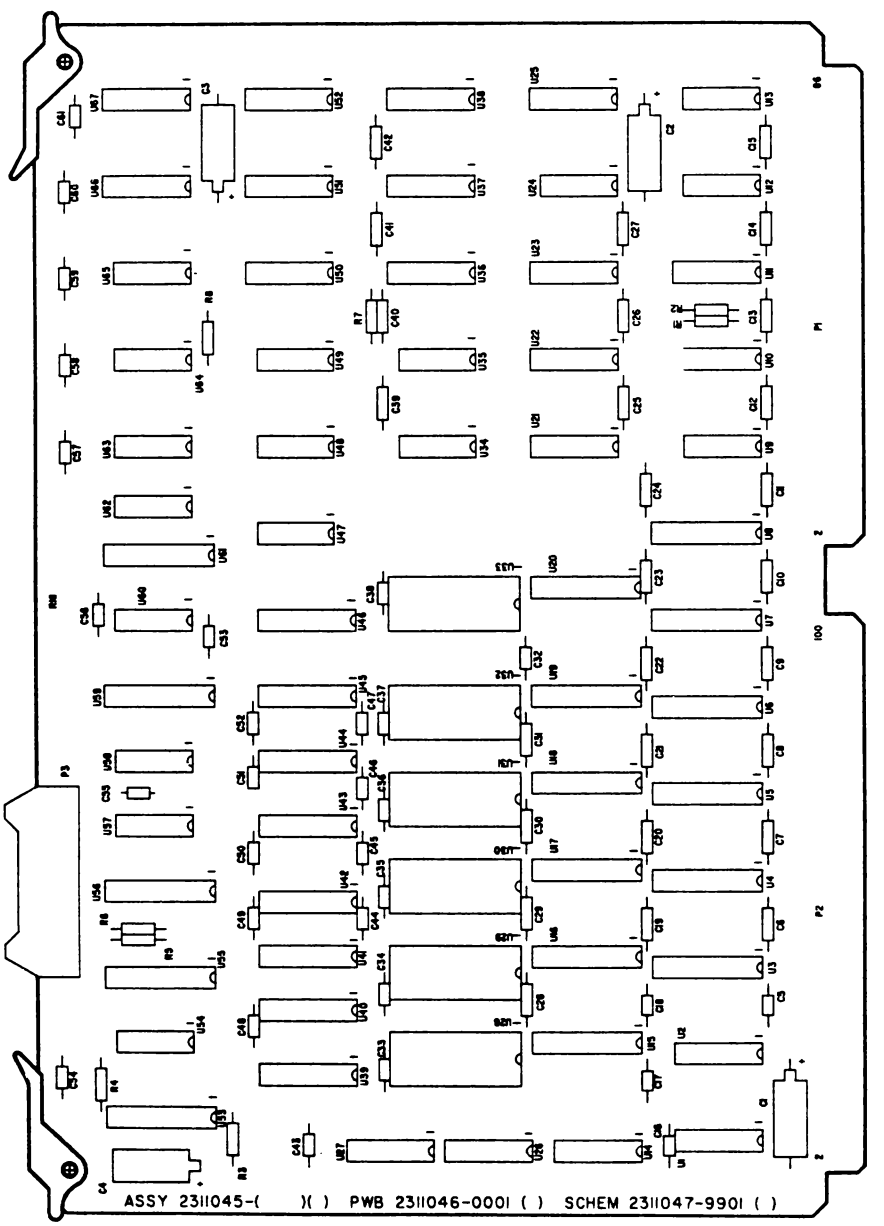

Figure 1-1 Breakpoint/Trace Board PN 2311045

Table 1-2 Chassis Configuraiton Label Information

Block Title	Information to be Entered
PWB Description	BREAKPOINT/TRACE
Part No	2311045-0001 OR 2311045-0002
REV	ENTER REVISION LETTER FRON BREAKPOINT/TRACE BOARD.

1.1.2.1 Extended Trace Cable Installation.

To complete the installation of the breakpoint/trace board the extended trace cable (PN 2232136-0001 must be installed. This cable plugs into the board via connector P3 on the edge of the board. Refer to Figure 1-1 for the location of P3. Note that the extedned trace cable is held in place by the target cable clamp and that theis clamp must be removed before installing or removing the breakpoint/trace board. When the exteded trace cable has been installed, restore the target cable clamp to its position to secure the extended trace cable. Refer to the appropriate XDS installation and operation manual for instructions on installing the target cable clamp.

The extended trace cable has an extended trace probe (PN 2232139-0001) which plugs on to the end of the cable. This probe may be connected or disconnected at any time during an operating session. You may find is desireable to disconnect the probe when it is not in use or to move the target system. When the Probe is disconnected it should be kept in a safe place.

1.1.2.2 Installation Completion.

Complete the installation according to the information in the appropriate XDS installation and operation Guide.

CAUTION

DO NOT OPERATE THE XDS UNIT WITH THE FRONT PANEL REMOVED. THE FRONT PANEL IS REQUIRED FOR PROPER AIR CIRCULATION AND COOLING OF THE CIRCUIT BOARDS. THE FRONT PANEL IS ALSO REQUIRED TO PREVENT LEAKAGE OF RFI/EMI RADIATION.

Restore power to the XDS unit. Refer to the appropriate emulator user's guide for further instructions on operating the XDS.

SECTION 2

HARDWARE FEATURES

2.1 INTRODUCTION

The breakpoint/trace board operates primarily with the emulator software that is referenced in the appropriate emulator user's guide. Also the features and applications of the extended trace cable are discussed in the emulators user's guide. The status lignts and power requirements are discussed below for the breakpoint/trace board.

2.1.1 Status Indicator Lights.

The XDS has four status indicator lights that are located on the fornt panel of the XDS. The Breakpoint/Trace board is required for sstatus light number one to function. The meaning of this light may differ for different emulators but the breakpoint/trace board controls it. If the breakpoint/trace board is not installed this light will not operate.

2.1.2 Extended Trace Probe.

The extended trace probe is color coded to enable you to keep track of each line. Table 2-1 relates the color code to data bit numbers.

2.1.3 Power Requirements.

The DC power requirements for the Breakpoint/Trace board are given in Table 2-2. This information may be used to calculate the total DC power requirements of the XDS system. When adding new boards to the system this DC Power calculation should be made to ensure that the XDS power supply will not be overloaded. Refer to the XDS Installation and Operation Manual for the power supply rating information, and the power requirements for the other circuit boards may be obtained from their appropriate reference manuals.

Table 2-1 Extended Trace Probe Color Code

Data Bit	Number	Color of Line
MSB	7	Violet
	6	Blue
	5	Green
	4	Yellow
	3	Orange
	2	Red
	1	Brown
LSB	0	Black
Ground		White

Table 2-2 Breakpoint/Trace DC Power Requirements

+ 5 VOLTS (AMPS)	+ 12 VOLTS (AMPS)	- 12 VOLTS (AMPS)
2.00	0	0

SECTION 3

THEORY OF OPERATION

3.1 INTRODUCTION

The breakpoint/trace board can be seperated into two basic sections: Break Point capability, and Tracing capability. This section will briefly discuss these capabilities and show a block diagram of the breakpoint/trace board.

3.1.1 Break Point Capability.

A break point is a hardware interrupt which causes emulator control to be passed back to the user, and is used to stop the emulator when it has been put into execution mode. You must set up the breakpoint options before executing a program. On power up the emulators disables the breakpoint/trace board until the user issues a breakpoint or trace command to initialize the breakpoint/trace board.

3.1.2 Tracing Capability.

The trace capability provides a record of the machine cycles that occured during the execution of a program. Each machine cycle, when it qualifies is stored in the trace buffer so that it can be recalled for examination at a later time.

3.1.3 Block Diagram.

Figure 3-1 shows a block diagram of the breakpoint trace board. The major blocks are the trace memory amd the data bus.

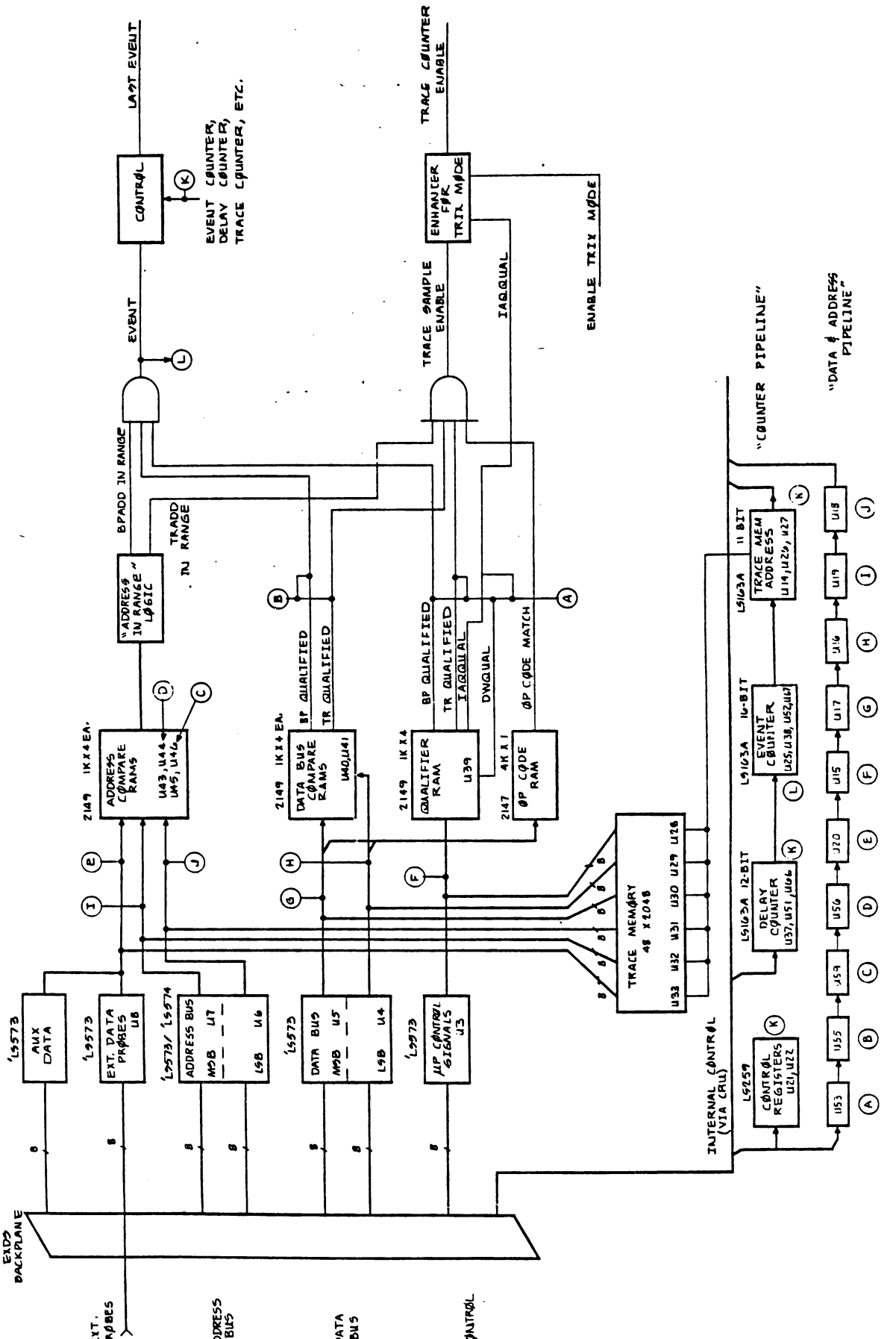

Figure 3-1 Breakpoint/trace Board Block Diagram

APPENDIX A

Breakpoint/Trace Board Schematics

NOTES UNLESS OTHERWISE SPECIFIED.

1. ALL DEVICE TYPES ARE PREFIXED WITH SN74.
2. VCC IS APPLIED TØ PIN 8 ØF ALL 8-PIN IC'S, PIN 14 ØF ALL 14-PIN IC'S, PIN 16 ØF ALL 16-PIN IC'S, PIN 20 ØF ALL 20-PIN IC'S, ETC.
3. GRØUND IS APPLIED TØ PIN 4 ØF ALL 8-PIN IC'S, PIN 7 ØF ALL 14-PIN IC'S, PIN 8 ØF ALL 16-PIN IC'S, PIN 10 ØF ALL 20-PIN IC'S, ETC.
4. DEVICE TYPE, PIN NUMBERS, AND REFERENCE DESIGNATØR ØF IC IS SHØWN AS FØLLØWS:

LS00 AND LS04 = DEVICE TYPE
1, 2, AND 3 = PIN NUMBERS
U2 AND U14 = REFERENCE DESIGNATØR

5. RESISTANCE VALUES ARE IN ØHMS.
6. RESISTØRS ARE 1/4 WATT, 5%.
7. CAPACITANCE VALUES ARE IN MICRØFARADS.
8. U1, U2, U10 AND U11 ARE ØPEN IC LØCATIØNS.
9. MSB/LSB DEFINITIØNS:
   A00 = MSB DB00 = MSB
   A15 = LSB DB15 = LSB

DRAWING NO. 2311047 REV 1

REVISIONS

REV	DESCRIPTION	DATE	APPROVED

-3 QTY	-2 QTY	-1 QTY	ITEM NO	PART OR IDENTIFYING NUMBER	NOMENCLATURE OR DESCRIPTION	NOTES
-						

PARTS LIST

UNLESS OTHERWISE SPECIFIED
- DIMENSIONS ARE IN MILLIMETERS
- TOLERANCES: 2 PLACE DECIMALS ± 0.25
- 1 PLACE DECIMALS ± 0.5; ANGLES ± 1°
- INTERPRET DRAWING PER ASME Y14.5M
- REMOVE ALL BURRS AND SHARP EDGES
- CONCENTRICITY MACHINED DIAMETERS Ø 0.05 FIM
- DIMENSIONAL LIMITS APPLY BEFORE PROCESSING
- PARENTHETICAL INFO FOR REF ONLY

HOLE TOLERANCES

Ø 0.0 THRU 3.15	+0.10 -0.00
Ø 3.18 THRU 6.35	+0.13 -0.00
Ø 6.38 THRU 12.70	+0.15 -0.00
Ø 12.73 THRU 19.05	+0.20 -0.00
Ø 19.08 THRU 25.40	+0.25 -0.00
Ø 25.43 THRU 50.80	+0.30 -0.00

THIRD ANGLE PROJECTION

2311045	7119	C. KEELER	1-3-83
NEXT ASSY	USED ON	C. KEELER	4-4-83
APPLICATION			2-6-83
			2-9-83
			2-14-83

TEXAS INSTRUMENTS INCORPORATED — SI-METRIC

LØGIC DIAGRAM, B/T CARD

SIZE D | CAGE CODE 06668 | DRAWING NO. 2311047

SCALE 1/2 NF | SHEET 1 OF 11

SEQ NO	IDENT	P SPEC	NO	ADDITIONAL	NOTES
	PROCESS			CLASSIFICATION	

PROCESS - FOR CORRELATION TO GOVT/IND SPECIFICATIONS SEE TI DRAWING 729487

REV STATUS OF SHEETS

REV												
SH	1	2	3	4	5	6	7	8	9	10	11	

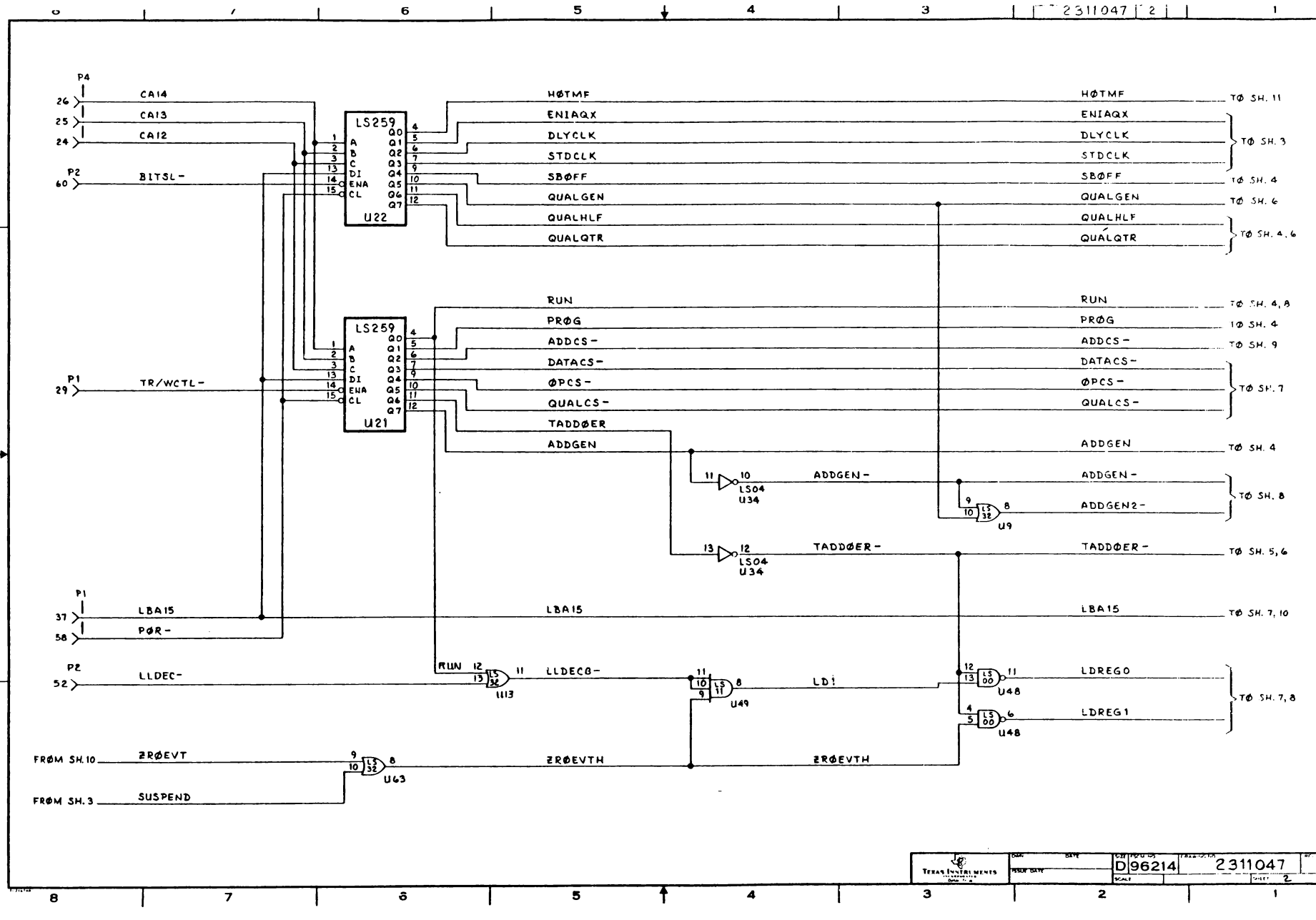
2311047 2
P4
26 CA14
25 CA13
24 CA12
P2
60 BITSL-
LS259
U22
HØTMF
ENIAQX
DLYCLK
STDCLK
SBØFF
QUALGEN
QUALHLF
QUALQTR
HØTMF TØ SH. 11
ENIAQX
DLYCLK
STDCLK
TØ SH. 3
SBØFF TØ SH. 4
QUALGEN TØ SH. 6
QUALHLF
QUALQTR
TØ SH. 4, 6
LS259
U21
P1
29 TR/WCTL-
RUN
PRØG
ADDCS-
DATACS-
ØPCS-
QUALCS-
TADDØER
ADDGEN
RUN TØ SH. 4, 8
PRØG TØ SH. 4
ADDCS- TØ SH. 9
DATACS-
ØPCS-
QUALCS-
TØ SH. 7
ADDGEN TØ SH. 4
LS04
U34
ADDGEN-
ADDGEN2-
LS32
U9
TØ SH. 8
LS04
U34
TADDØER-
TØ SH. 5, 6
P1
37 LBA15
58 PØR-
LBA15
LBA15 TØ SH. 7, 10
P2
52 LLDEC-
RUN
LS32
U113
LLDECB-
LS11
U49
LD1
LS00
U48
LDREG0
LDREG1
TØ SH. 7, 8
FROM SH. 10 ZRØEVT
FROM SH. 3 SUSPEND
LS32
U63
ZRØEVTH
ZRØEVTH
TEXAS INSTRUMENTS
D 96214
2311047
SHEET 2
8 7 6 5 4 3 2 1
A B C D
A-4

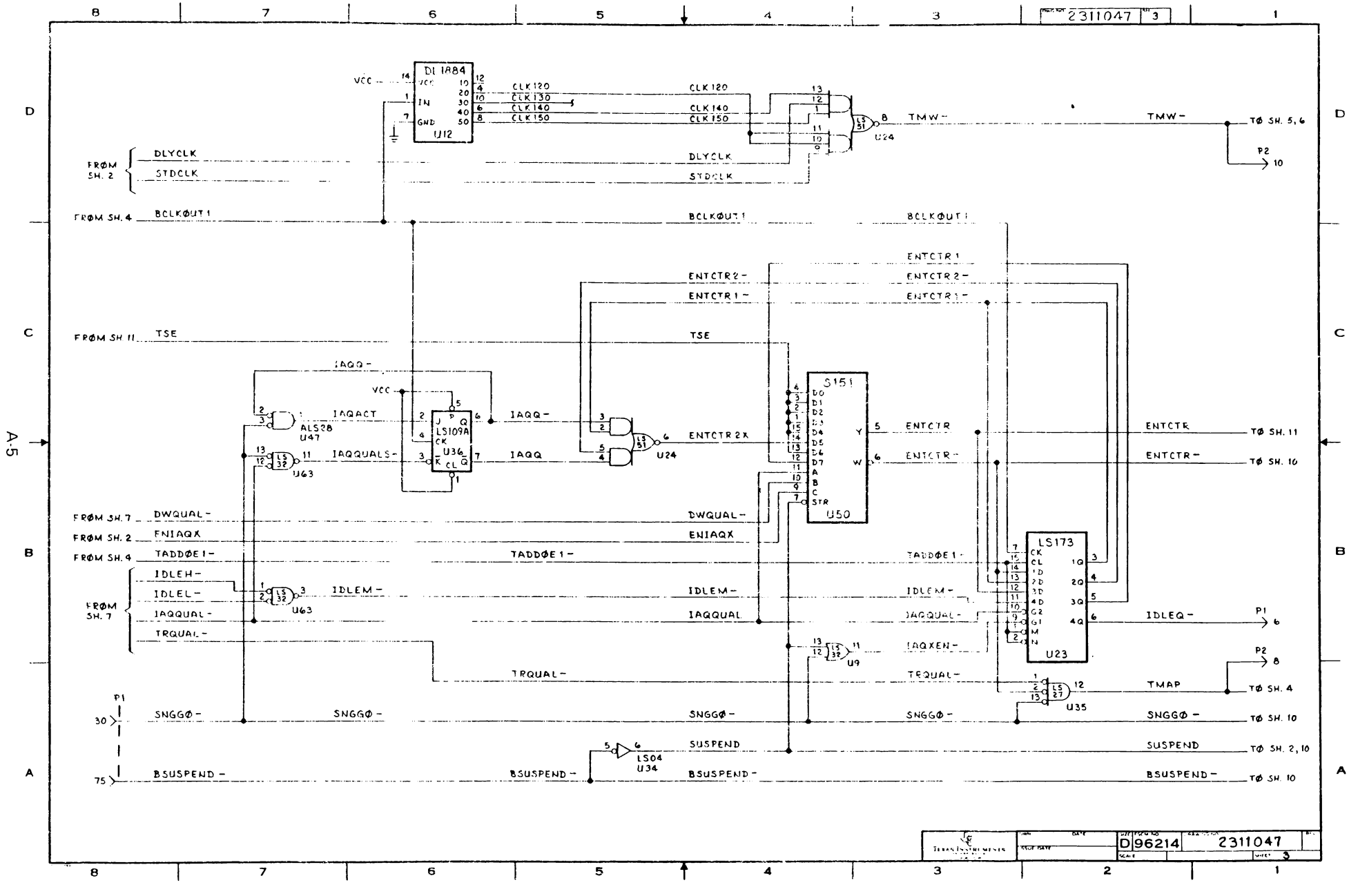
2311047
DL1884
U12
VCC
IN
GND
CLK120
CLK130
CLK140
CLK150
TMW-
TØ SH. 5, 6
P2
FRØM SH. 2
DLYCLK
STDCLK
FRØM SH. 4
BCLKØUT1
ENTCTR1
ENTCTR2-
ENTCTR1-
FRØM SH. 11
TSE
IAQQ-
IAQACT
IAQQUALS-
IAQQ
ALS28
U47
U63
LS109A
U36
U24
ENTCTR2X
S151
U50
ENTCTR
ENTCTR-
TØ SH. 11
TØ SH. 10
FRØM SH. 7
DWQUAL-
FRØM SH. 2
ENIAQX
FRØM SH. 4
TADDØE1-
IDLEH-
IDLEL-
IAQQUAL-
TRQUAL-
IDLEM-
IAQQUAL
IAQXEN-
LS173
U23
IDLEQ-
P1
U9
TMAP
TØ SH. 4
U35
SNGGØ-
SUSPEND
TØ SH. 2, 10
BSUSPEND-
LS04
U34
TEXAS INSTRUMENTS
D 96214
2311047
SHEET 3

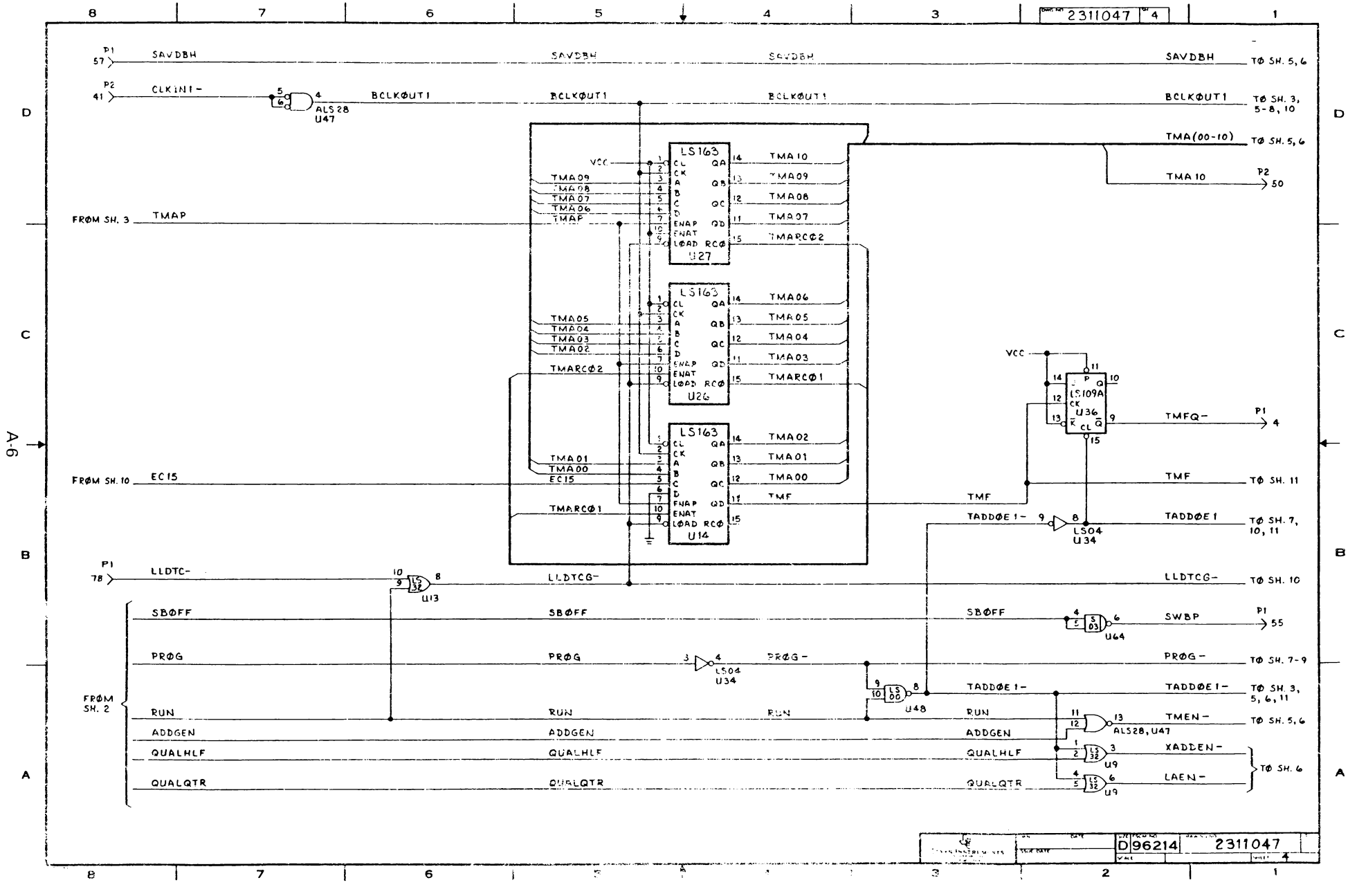
2311047 4
P1 57 SAVDBH
P2 41 CLKIN1-
ALS28 U47
BCLKØUT1
TMA(00-10)
TØ SH. 5, 6
TMA10
P2 50
FRØM SH. 3 TMAP
LS163 U27
LS163 U26
LS163 U14
VCC
TMA09
TMA08
TMA07
TMA06
TMAP
TMA05
TMA04
TMA03
TMA02
TMARCØ2
TMARCØ1
TMA01
TMA00
EC15
FRØM SH. 10 EC15
TMF
LS109A U36
TMFQ-
P1 4
TMF
TØ SH. 11
TADDØE1-
LS04 U34
TADDØE1
TØ SH. 7, 10, 11
P1 78 LLDTC-
LS32 U13
LLDTCG-
TØ SH. 10
SBØFF
SWBP
P1 55
U64
PRØG
PRØG-
TØ SH. 7-9
FRØM SH. 2
RUN
ADDGEN
QUALHLF
QUALQTR
U48
TMEN-
ALS28, U47
XADDEN-
LAEN-
TØ SH. 6
D 96214
2311047
4

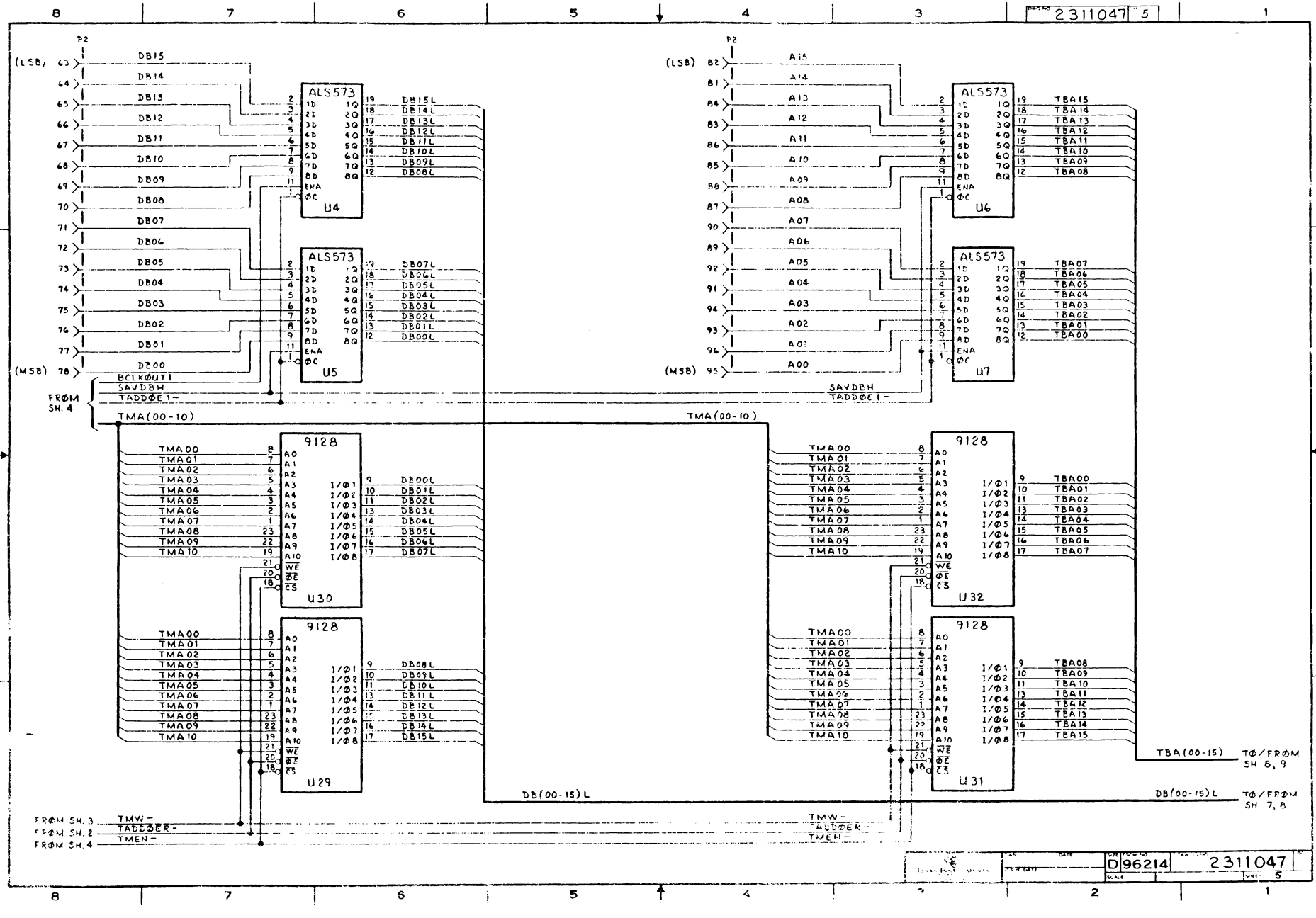
2311047 5
P2
(LSB) 63 DB15
64 DB14
65 DB13
66 DB12
67 DB11
68 DB10
69 DB09
70 DB08
71 DB07
72 DB06
73 DB05
74 DB04
75 DB03
76 DB02
77 DB01
(MSB) 78 DB00
ALS573
U4
U5
DB15L DB14L DB13L DB12L DB11L DB10L DB09L DB08L
DB07L DB06L DB05L DB04L DB03L DB02L DB01L DB00L
BCLKØUT1
SAVDBH
TADDØE1-
FROM SH. 4
TMA(00-10)
9128
U30
U29
DB00L DB01L DB02L DB03L DB04L DB05L DB06L DB07L
DB08L DB09L DB10L DB11L DB12L DB13L DB14L DB15L
DB(00-15)L
FROM SH. 3 TMW-
FROM SH. 2 TADDØER-
FROM SH. 4 TMEN-
(LSB) 82 A15
81 A14
84 A13
83 A12
86 A11
85 A10
88 A09
87 A08
90 A07
89 A06
92 A05
91 A04
94 A03
93 A02
96 A01
(MSB) 95 A00
U6
U7
TBA15 TBA14 TBA13 TBA12 TBA11 TBA10 TBA09 TBA08
TBA07 TBA06 TBA05 TBA04 TBA03 TBA02 TBA01 TBA00
U32
U31
TBA(00-15) TØ/FROM SH 8, 9
TØ/FROM SH 7, 8
D 96214 2311047 5

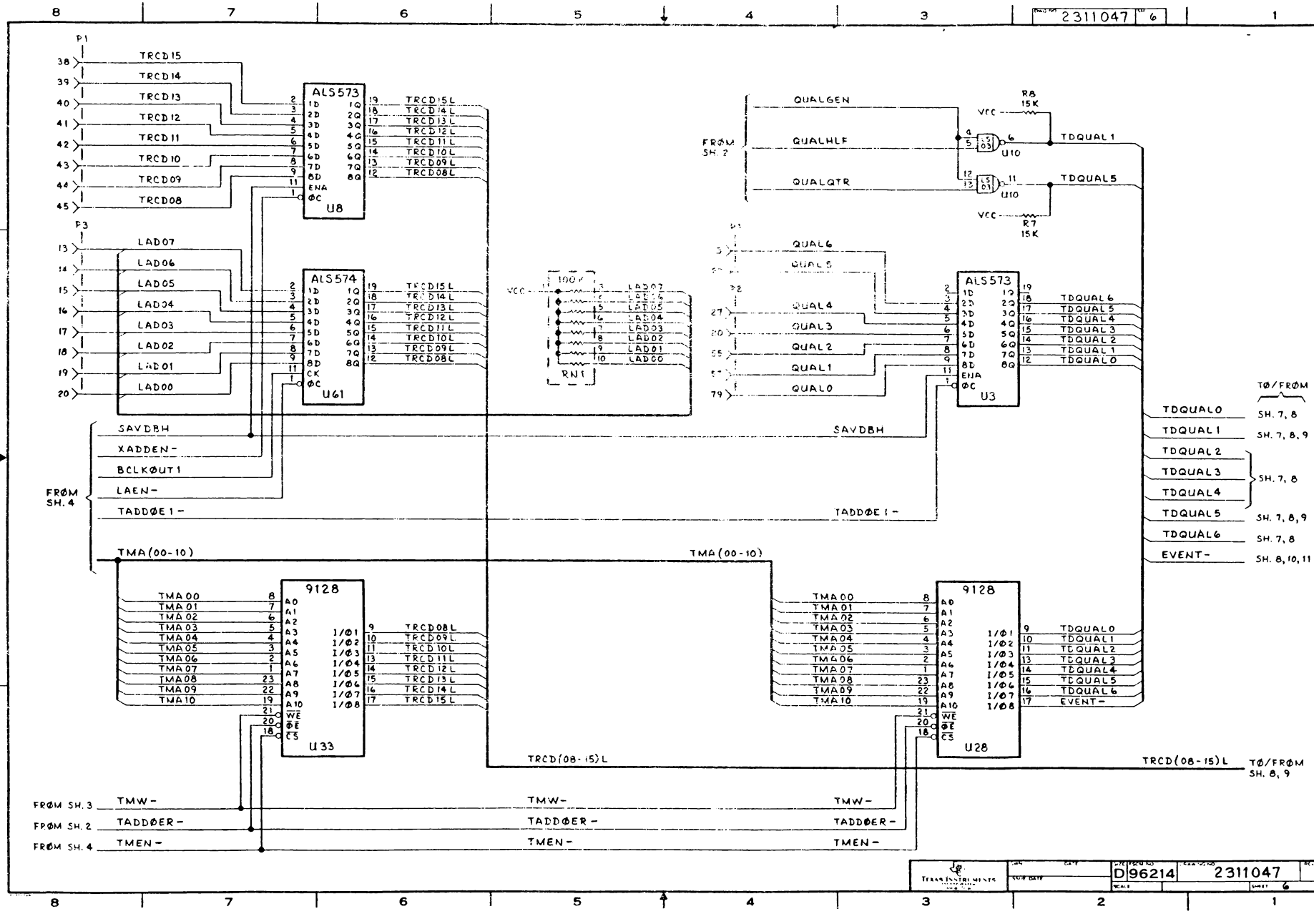
2311047 6
P1
TRCD15
TRCD14
TRCD13
TRCD12
TRCD11
TRCD10
TRCD09
TRCD08
ALS573
U8
TRCD15L
TRCD14L
TRCD13L
TRCD12L
TRCD11L
TRCD10L
TRCD09L
TRCD08L
P3
LAD07
LAD06
LAD05
LAD04
LAD03
LAD02
LAD01
LAD00
ALS574
U61
100K
RN1
QUALGEN
QUALHLF
QUALQTR
FROM SH. 2
R8 15K
R7 15K
VCC
U10
TDQUAL1
TDQUAL5
QUAL6
QUAL5
QUAL4
QUAL3
QUAL2
QUAL1
QUAL0
ALS573
U3
TDQUAL6
TDQUAL5
TDQUAL4
TDQUAL3
TDQUAL2
TDQUAL1
TDQUAL0
TØ/FRØM
TDQUAL0 SH. 7, 8
TDQUAL1 SH. 7, 8, 9
TDQUAL2
TDQUAL3
TDQUAL4
SH. 7, 8
TDQUAL5 SH. 7, 8, 9
TDQUAL6 SH. 7, 8
EVENT- SH. 8, 10, 11
SAVDBH
XADDEN-
BCLKOUT1
LAEN-
TADDØE1-
FRØM SH. 4
TMA(00-10)
9128
U33
U28
TMA00
TMA01
TMA02
TMA03
TMA04
TMA05
TMA06
TMA07
TMA08
TMA09
TMA10
TRCD08L
TRCD09L
TRCD10L
TRCD11L
TRCD12L
TRCD13L
TRCD14L
TRCD15L
TDQUAL0
TDQUAL1
TDQUAL2
TDQUAL3
TDQUAL4
TDQUAL5
TDQUAL6
EVENT-
TRCD(08-15)L
TØ/FRØM SH. 8, 9
FROM SH. 3
FROM SH. 2
FROM SH. 4
TMW-
TADDØER-
TMEN-
D 96214
2311047
6

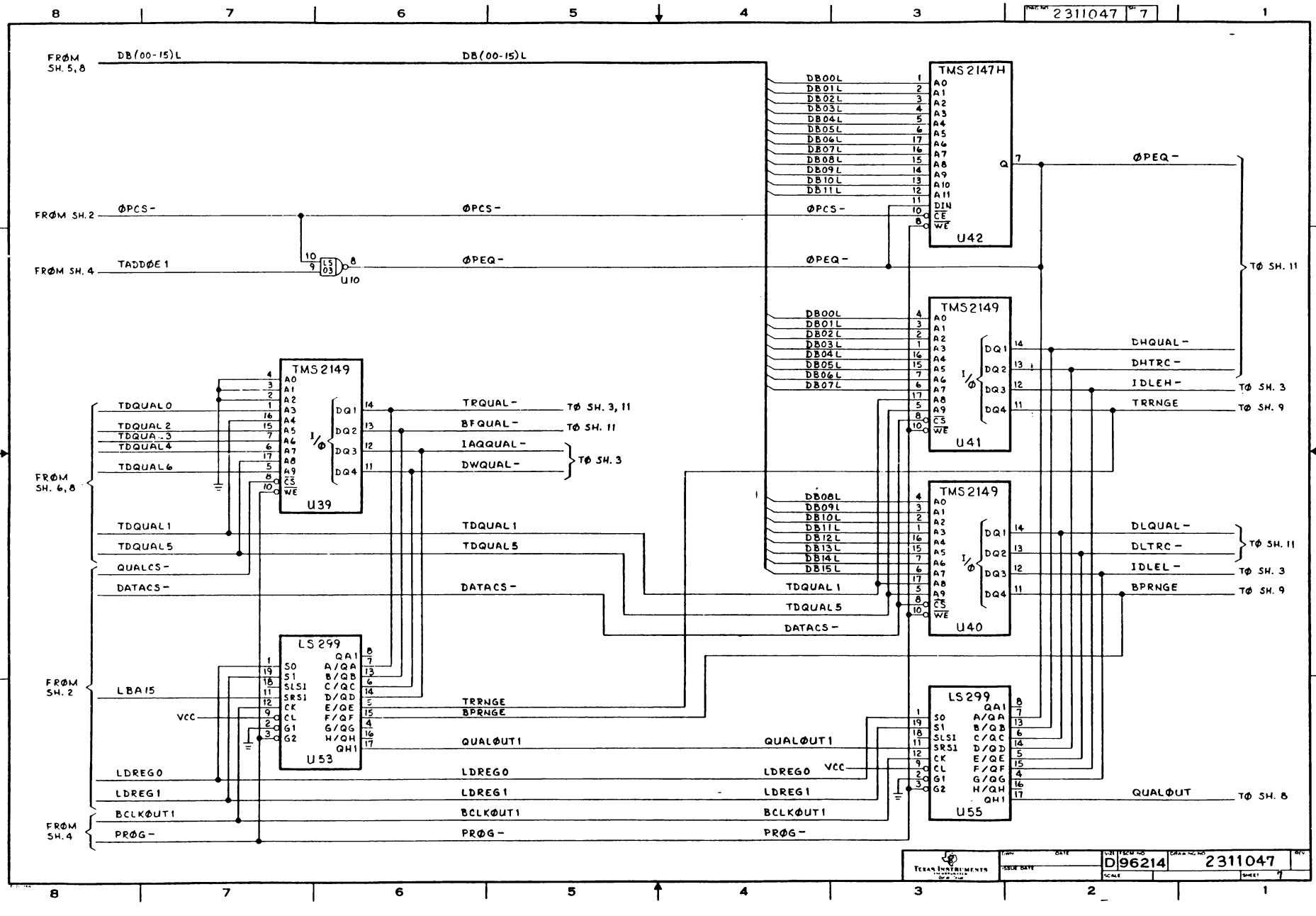
2311047 7
FROM SH. 5, 8
DB(00-15)L
DB(00-15)L
TMS2147H
U42
FROM SH. 2
ØPCS-
ØPCS-
ØPCS-
ØPEQ-
FROM SH. 4
TADDØE1
ØPEQ-
ØPEQ-
U10
TØ SH. 11
TMS2149
U41
DHQUAL-
DHTRC-
IDLEH-
TØ SH. 3
TRRNGE
TØ SH. 9
TMS2149
U39
TDQUAL0
TDQUAL2
TDQUA..3
TDQUAL4
TDQUAL6
TRQUAL-
TØ SH. 3, 11
BFQUAL-
TØ SH. 11
IAQQUAL-
DWQUAL-
TØ SH. 3
FROM SH. 6, 8
TMS2149
U40
DLQUAL-
DLTRC-
IDLEL-
BPRNGE
TØ SH. 11
TØ SH. 3
TØ SH. 9
TDQUAL1
TDQUAL5
QUALCS-
DATACS-
TDQUAL1
TDQUAL5
DATACS-
LS299
U53
FROM SH. 2
LBA15
VCC
TRRNGE
BPRNGE
QUALØUT1
QUALØUT1
LS299
U55
LDREG0
LDREG1
BCLKØUT1
PRØG-
LDREG0
LDREG1
BCLKØUT1
PRØG-
VCC
QUALØUT
TØ SH. 8
FROM SH. 4
TEXAS INSTRUMENTS
D96214
2311047
A-9

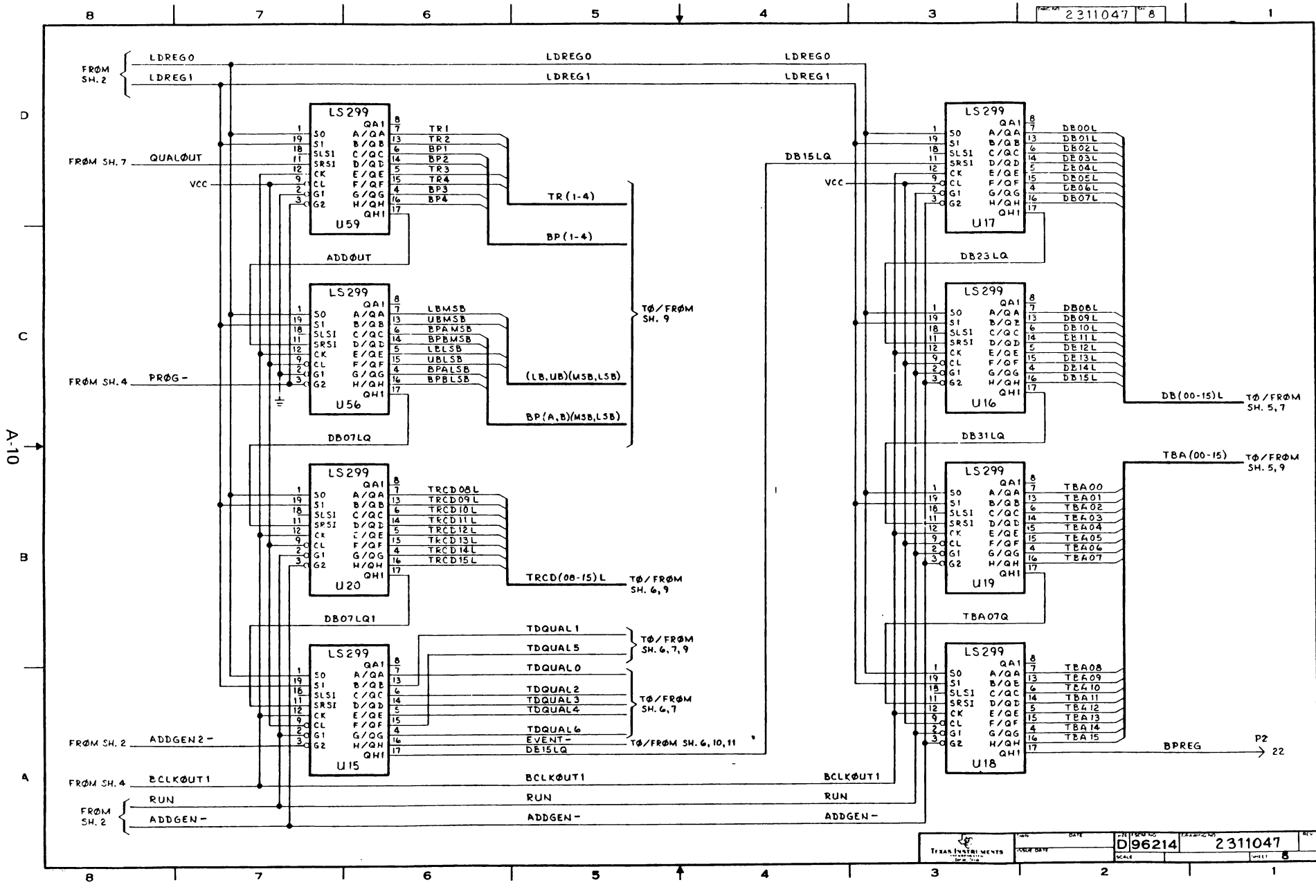
2311047 8
FROM SH. 2
LDREG0
LDREG1
FROM SH. 7
QUALOUT
VCC
FROM SH. 4
PROG-
ADDOUT
DB07LQ
DB07LQ1
FROM SH. 2
ADDGEN2-
FROM SH. 4
BCLKOUT1
FROM SH. 2
RUN
ADDGEN-
LS299
U59
U56
U20
U15
U17
U16
U19
U18
TR1
TR2
BP1
BP2
TR3
TR4
BP3
BP4
TR(1-4)
BP(1-4)
LBMSB
UBMSB
BPAMSB
BPBMSB
LBLSB
UBLSB
BPALSB
BPBLSB
(LB,UB)(MSB,LSB)
BP(A,B)(MSB,LSB)
TØ/FROM SH. 9
TRCD08L
TRCD09L
TRCD10L
TRCD11L
TRCD12L
TRCD13L
TRCD14L
TRCD15L
TRCD(08-15)L
TØ/FROM SH. 6,9
TDQUAL1
TDQUAL5
TDQUAL0
TDQUAL2
TDQUAL3
TDQUAL4
TDQUAL6
EVENT-
DB15LQ
TØ/FROM SH. 6,7,9
TØ/FROM SH. 6,7
TØ/FROM SH. 6,10,11
DB15LQ
DB23LQ
DB31LQ
TBA07Q
DB00L
DB01L
DB02L
DB03L
DB04L
DB05L
DB06L
DB07L
DB08L
DB09L
DB10L
DB11L
DB12L
DB13L
DB14L
DB15L
DB(00-15)L
TØ/FROM SH. 5,7
TBA00
TBA01
TBA02
TBA03
TBA04
TBA05
TBA06
TBA07
TBA(00-15)
TØ/FROM SH. 5,9
TBA08
TBA09
TBA10
TBA11
TBA12
TBA13
TBA14
TBA15
BPREG
P2
22
LDREG0
LDREG1
DB15LQ
VCC
BCLKOUT1
RUN
ADDGEN-
TEXAS INSTRUMENTS
D96214
2311047
SCALE
SHEET 8
A-10

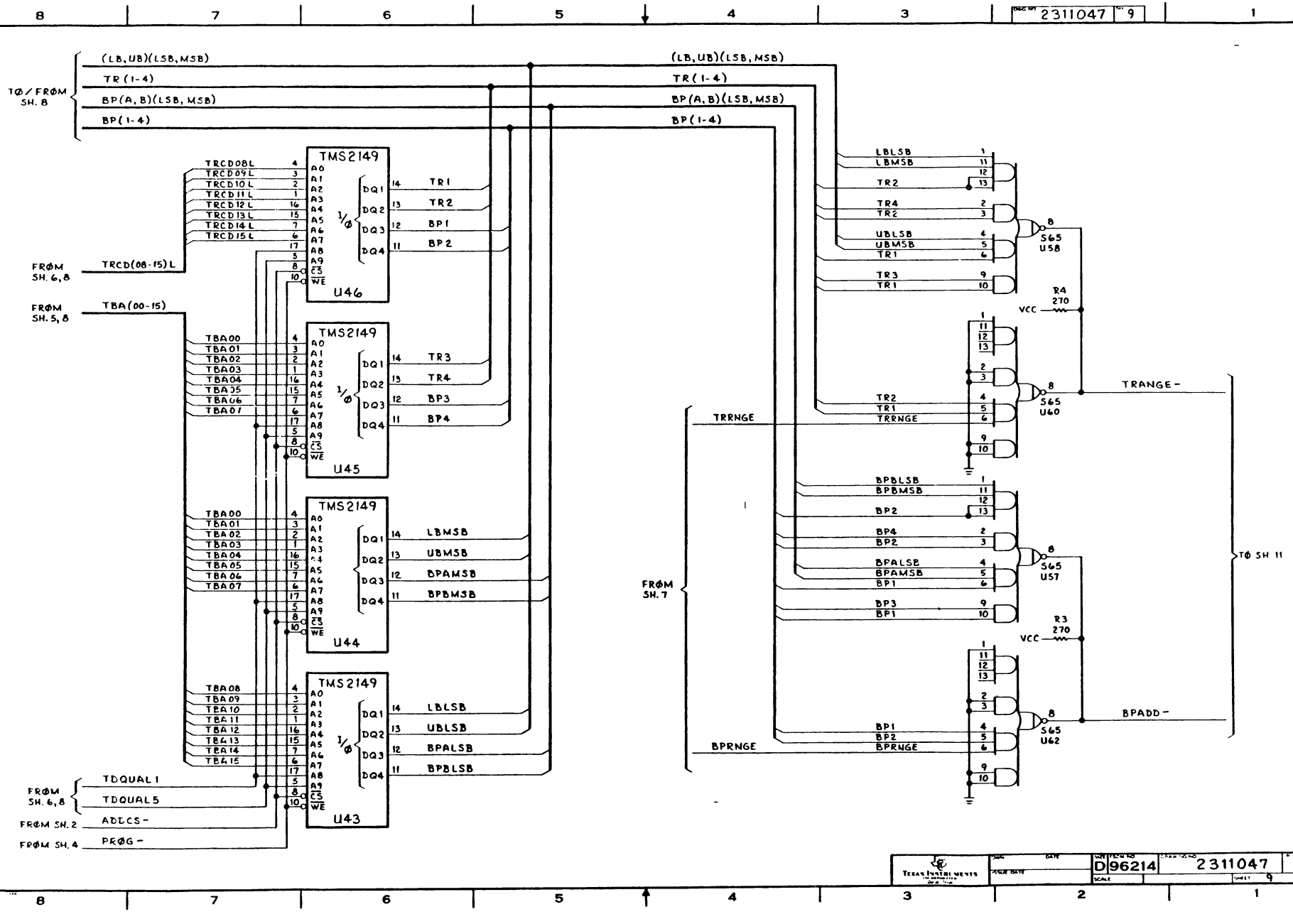
2311047 9
(LB,UB)(LSB,MSB)
TR(1-4)
BP(A,B)(LSB,MSB)
BP(1-4)
TØ/FROM SH. 8
FROM SH. 6,8
TRCD(08-15)L
FROM SH. 5,8
TBA(00-15)
FROM SH. 6,8
TDQUAL1
TDQUAL5
FROM SH. 2
ADDCS-
FROM SH. 4
PRØG-
TMS2149
U46
U45
U44
U43
TR1
TR2
BP1
BP2
TR3
TR4
BP3
BP4
LBMSB
UBMSB
BPAMSB
BPBMSB
LBLSB
UBLSB
BPALSB
BPBLSB
FROM SH. 7
TRRNGE
BPRNGE
S65 U58
S65 U60
S65 U57
S65 U62
R4 270
R3 270
VCC
TRANGE-
BPADD-
TØ SH 11
TEXAS INSTRUMENTS
D 96214
2311047

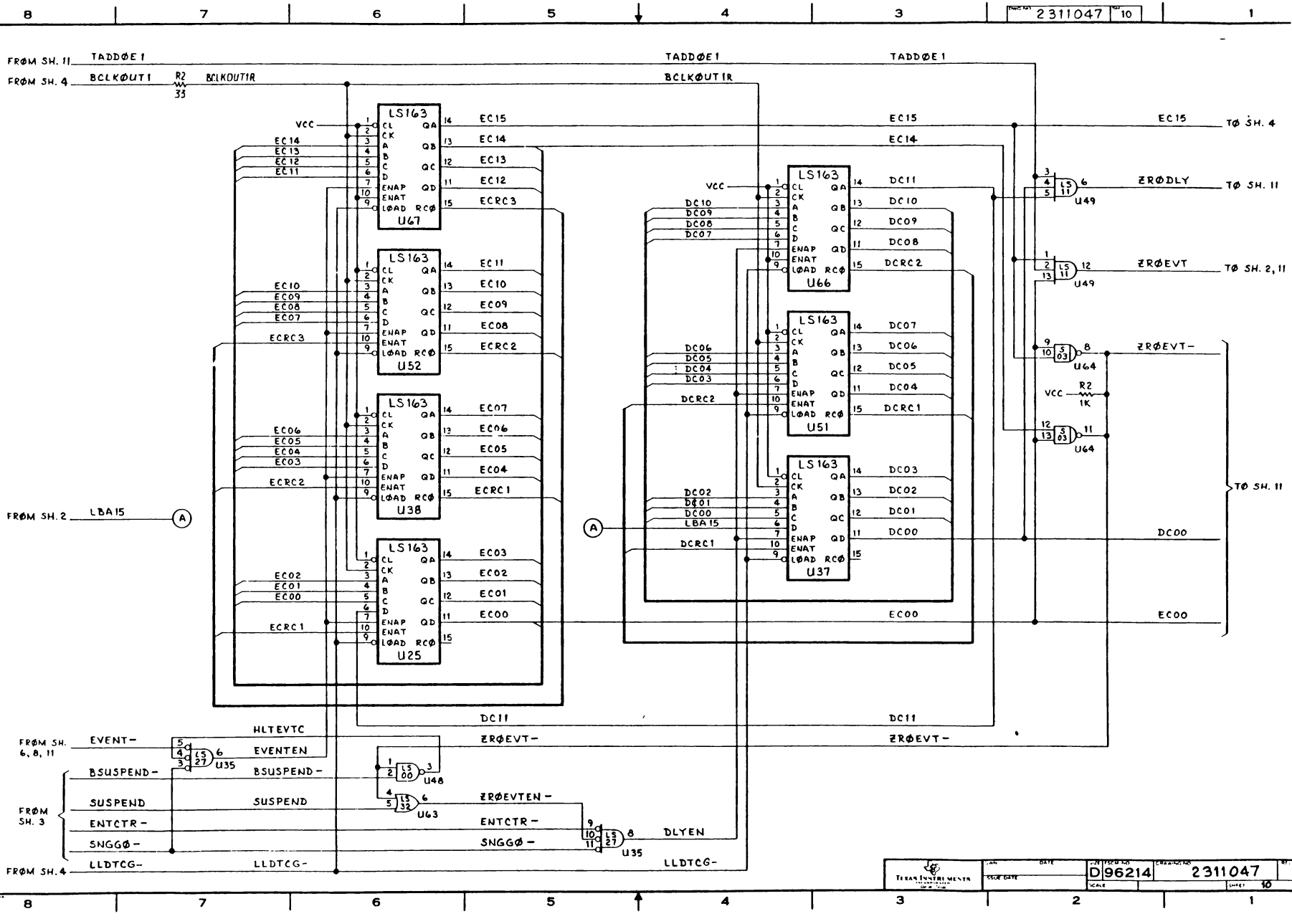

2311047
10
FRØM SH. 11
TADDØE1
FRØM SH. 4
BCLKØUT1
R2
33
BCLKOUT1R
VCC
LS163
U67
U52
U38
U25
U66
U51
U37
EC15
EC14
EC13
EC12
ECRC3
EC11
EC10
EC09
EC08
EC07
ECRC2
EC06
EC05
EC04
EC03
ECRC1
EC02
EC01
EC00
DC11
DC10
DC09
DC08
DCRC2
DC07
DC06
DC05
DC04
DCRC1
DC03
DC02
DC01
DC00
LBA15
FRØM SH. 2
LBA15
TØ SH. 4
ZRØDLY
TØ SH. 11
ZRØEVT
TØ SH. 2, 11
ZRØEVT-
U49
U64
R2
1K
FRØM SH. 6, 8, 11
EVENT-
HLTEVTC
EVENTEN
U35
BSUSPEND-
U48
U63
FRØM SH. 3
SUSPEND
ENTCTR-
SNGGØ-
ZRØEVTEN-
DLYEN
FRØM SH. 4
LLDTCG-
TEXAS INSTRUMENTS
D
96214
2311047
10

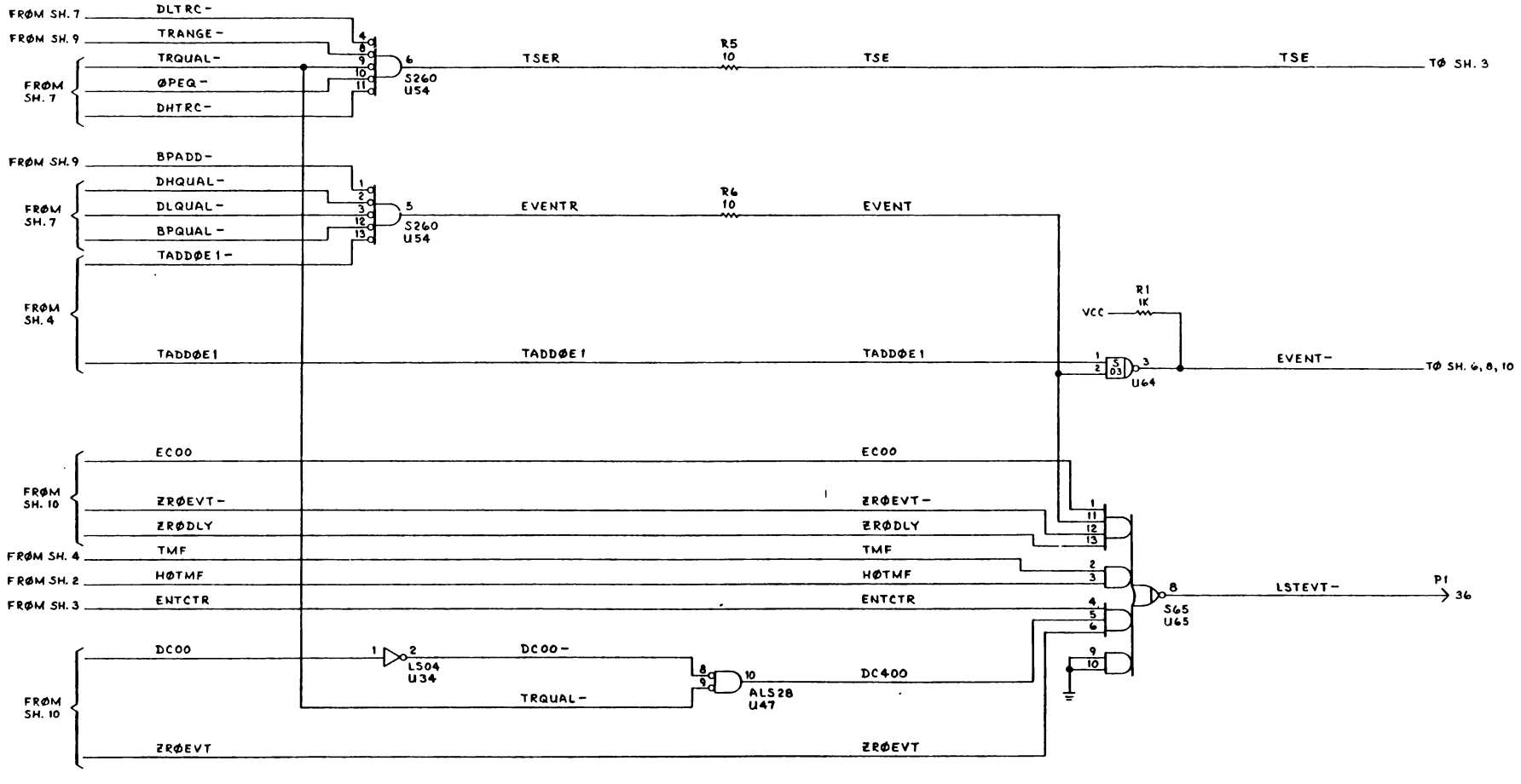
FROM SH. 7
DLTRC-
FROM SH. 9
TRANGE-
FROM SH. 7
TRQUAL-
ØPEQ-
DHTRC-
S260
U54
TSER
R5
10
TSE
TSE
TØ SH. 3
FROM SH. 9
BPADD-
FROM SH. 7
DHQUAL-
DLQUAL-
BPQUAL-
S260
U54
EVENTR
R6
10
EVENT
FROM SH. 4
TADDØE1-
TADDØE1
TADDØE1
TADDØE1
R1
1K
VCC
S
03
U64
EVENT-
TØ SH. 6, 8, 10
FROM SH. 4
EC00
EC00
FROM SH. 10
ZRØEVT-
ZRØDLY
ZRØEVT-
ZRØDLY
FROM SH. 4
TMF
TMF
FROM SH. 2
HØTMF
HØTMF
FROM SH. 3
ENTCTR
ENTCTR
S65
U65
LSTEVT-
P1
36
FROM SH. 10
DC00
LS04
U34
DC00-
TRQUAL-
ALS28
U47
DC400
ZRØEVT
ZRØEVT

U S E R ' S R E S P O N S E S H E E T

Manual Title: XDS BREAKPOINT/TRACE INSTALLATION AND OPERATION GUIDE
PN 1603442-9701

Manual Date: 19 October 1983 Date of This Letter: _____

User's Name: _____ Telephone: _____

Company: _____ Office/Department: _____

Street Address: _____

City/State/Zip Code _____

Please list any descrepancy found in this manual by page, paragraph, figure or table number in the following space. If there are any other suggestions or comments that you wish to make, feel free to include them. Thank You.

Location in Manual	Comment/Suggestion
_____	_____
	_____
	_____
	_____
_____	_____
	_____
	_____
	_____
_____	_____
	_____
	_____

FOLD

NO POSTAGE
NECESSARY
IF MAILED
IN THE
UNITED STATES

BUSINESS REPLY MAIL

FIRST CLASS PERMIT NO. 6189 HOUSTON, TEXAS

POSTAGE WILL BE PAID BY ADDRESSEE

TEXAS INSTRUMENTS INCORPORATED
MOS MICROCOMPUTER SYSTEMS
P.O. BOX 1443
HOUSTON, TEXAS 77001

ATTENTION: TECHNICAL PUBLICATIONS
MAIL STATION 6440

FOLD

October 1983
Revision *
1603442-9701
Printed in U.S.A.

TEXAS INSTRUMENTS

Creating useful products
and services for you.

SPDU019